6–14–99
Vol. 64 No. 113
Pages 31687–31962

federal register

Monday
June 14, 1999

The **FEDERAL REGISTER** is published daily, Monday through Friday, except official holidays, by the Office of the Federal Register, National Archives and Records Administration, Washington, DC 20408, under the Federal Register Act (44 U.S.C. Ch. 15) and the regulations of the Administrative Committee of the Federal Register (1 CFR Ch. I). The Superintendent of Documents, U.S. Government Printing Office, Washington, DC 20402 is the exclusive distributor of the official edition.

The **Federal Register** provides a uniform system for making available to the public regulations and legal notices issued by Federal agencies. These include Presidential proclamations and Executive Orders, Federal agency documents having general applicability and legal effect, documents required to be published by act of Congress, and other Federal agency documents of public interest.

Documents are on file for public inspection in the Office of the Federal Register the day before they are published, unless the issuing agency requests earlier filing. For a list of documents currently on file for public inspection, see http://www.nara.gov/fedreg.

The seal of the National Archives and Records Administration authenticates the Federal Register as the official serial publication established under the Federal Register Act. Under 44 U.S.C. 1507, the contents of the **Federal Register** shall be judicially noticed.

The **Federal Register** is published in paper and on 24x microfiche. It is also available online at no charge as one of the databases on GPO Access, a service of the U.S. Government Printing Office.

The online edition of the **Federal Register** is issued under the authority of the Administrative Committee of the Federal Register as the official legal equivalent of the paper and microfiche editions (44 U.S.C. 4101 and 1 CFR 5.10). It is updated by 6 a.m. each day the **Federal Register** is published and it includes both text and graphics from Volume 59, Number 1 (January 2, 1994) forward.

GPO Access users can choose to retrieve online **Federal Register** documents as TEXT (ASCII text, graphics omitted), PDF (Adobe Portable Document Format, including full text and all graphics), or SUMMARY (abbreviated text) files. Users should carefully check retrieved material to ensure that documents were properly downloaded.

On the World Wide Web, connect to the **Federal Register** at http://www.access.gpo.gov/nara. Those without World Wide Web access can also connect with a local WAIS client, by Telnet to swais.access.gpo.gov, or by dialing (202) 512-1661 with a computer and modem. When using Telnet or modem, type swais, then log in as guest with no password.

For more information about GPO Access, contact the GPO Access User Support Team by E-mail at gpoaccess@gpo.gov; by fax at (202) 512–1262; or call (202) 512–1530 or 1–888–293–6498 (toll free) between 7 a.m. and 5 p.m. Eastern time, Monday–Friday, except Federal holidays.

The annual subscription price for the **Federal Register** paper edition is $555, or $607 for a combined **Federal Register,** Federal Register Index and List of CFR Sections Affected (LSA) subscription; the microfiche edition of the **Federal Register** including the Federal Register Index and LSA is $220. Six month subscriptions are available for one-half the annual rate. The charge for individual copies in paper form is $8.00 for each issue, or $8.00 for each group of pages as actually bound; or $1.50 for each issue in microfiche form. All prices include regular domestic postage and handling. International customers please add 25% for foreign handling. Remit check or money order, made payable to the Superintendent of Documents, or charge to your GPO Deposit Account, VISA, MasterCard or Discover. Mail to: New Orders, Superintendent of Documents, P.O. Box 371954, Pittsburgh, PA 15250–7954.

There are no restrictions on the republication of material appearing in the **Federal Register.**

How To Cite This Publication: Use the volume number and the page number. Example: 64 FR 12345.

SUBSCRIPTIONS AND COPIES

PUBLIC	
Subscriptions:	
Paper or fiche	**202–512–1800**
Assistance with public subscriptions	**512–1806**
General online information	**202–512–1530; 1–888–293–6498**
Single copies/back copies:	
Paper or fiche	**512–1800**
Assistance with public single copies	**512–1803**
FEDERAL AGENCIES	
Subscriptions:	
Paper or fiche	**523–5243**
Assistance with Federal agency subscriptions	**523–5243**

Printed on recycled paper.

Contents

Federal Register

Vol. 64, No. 113

Monday, June 14, 1999

Agricultural Marketing Service
PROPOSED RULES
Peanut promotion, research, and information order, 31736–31737

Agriculture Department
See Agricultural Marketing Service
See Forest Service

Army Department
NOTICES
Agency information collection activities:
Proposed collection; comment request, 31846

Arts and Humanities, National Foundation
See National Foundation on the Arts and the Humanities

Centers for Disease Control and Prevention
NOTICES
Agency information collection activities:
Submission for OMB review; comment request, 31865–31866
Meetings:
Energy-Related Epidemiologic Research Advisory Committee, 31866

Children and Families Administration
NOTICES
Agency information collection activities:
Submission for OMB review; comment request, 31866–31867

Commerce Department
See Export Administration Bureau
See Foreign-Trade Zones Board
See National Institute of Standards and Technology
See National Oceanic and Atmospheric Administration

Comptroller of the Currency
PROPOSED RULES
Investment securities; corporate activities rules, policies, and procedures; and interpretive rulings, 31749–31756

Defense Department
See Army Department
See Navy Department
RULES
Acquisition regulations:
Congressional Medal of Honor, 31732–31733
Contract actions for leased equipment, 31732
NOTICES
Agency information collection activities:
Proposed collection; comment request, 31825–31826
Submission for OMB review; comment request, 31826–31828
Arms sales notification; transmittal letter, etc., 31828–31837
Meetings:
Defense Policy Board Advisory Committee, 31838
Electron Devices Advisory Group, 31838–31839
Military Justice Joint Service Committee, 31839
Wage Committee, 31839–31840
Travel per diem rates, civilian personnel; changes, 31840–31846

Employment and Training Administration
NOTICES
Agency information collection activities:
Proposed collection; comment request, 31877–31878

Energy Department
See Federal Energy Regulatory Commission

Environmental Protection Agency
RULES
Air pollutants, hazardous; national emission standards:
Polyether polyols production
Correction, 31895
Portland cement manufacturing industry, 31897–31960
Wool fiberglass manufacturing, 31695–31731
PROPOSED RULES
Air programs:
Stratospheric ozone protection—
Nonessential products ban; reconsideration, 31772–31780
NOTICES
Meetings:
Oxygenate Use in Gasoline Panel, 31852
Science Advisory Board, 31852
Toxic and hazardous substances control:
New chemicals; receipt and status information, 31852–31863

Export Administration Bureau
NOTICES
Agency information collection activities:
Proposed collection; comment request, 31823–31824

Federal Aviation Administration
RULES
Airworthiness directives:
New Piper Aircraft, Inc., 31687–31689
Raytheon, 31689–31691
PROPOSED RULES
Airworthiness directives:
Boeing, 31762–31769
LET Aeronautical Works, 31760–31762
Pilatus Aircraft Ltd., 31756–31760

Federal Communications Commission
PROPOSED RULES
Common carrier services:
Federal-State Joint Board on Universal Service—
Non-rural local exchange carriers; high cost support; forward-looking mechanism, 31780–31806
NOTICES
Agency information collection activities:
Proposed collection; comment request, 31863–31865

Federal Energy Regulatory Commission
NOTICES
Hydroelectric applications, 31849–31850
Meetings; Sunshine Act, 31850–31851
Applications, hearings, determinations, etc.:
Cotton Valley Compression, L.L.C., 31847–31848
Louisiana State Gas, LLC, 31848
Transok, LLC, 31848
United Gas Services, 31848–31849

Federal Housing Enterprise Oversight Office
PROPOSED RULES
Risk-based capital:
Stress test; House Price Index (HPI) use and benchmark credit loss experience determination, 31756

Federal Mine Safety and Health Review Commission
RULES
Equal Access to Justice Act; implementation:
Attorneys' fees and other expenses; award; correction, 31895

Federal Reserve System
NOTICES
Banks and bank holding companies:
Change in bank control, 31865
Formations, acquisitions, and mergers, 31865

Fish and Wildlife Service
NOTICES
Endangered and threatened species:
Endangered species conservation; habitat role clarification, 31871–31874

Foreign-Trade Zones Board
NOTICES
Applications, hearings, determinations, etc.:
Arizona
Gowan Co.; agrichemicals manufacturing and warehousing facilities, 31824–31825

Forest Service
NOTICES
Meetings:
National Urban and Community Forestry Advisory Council, 31823

General Services Administration
RULES
Federal property management:
Utilization and disposal—
Real property available for disposal; appraisals, 31731–31732

Health and Human Services Department
See Centers for Disease Control and Prevention
See Children and Families Administration
See Substance Abuse and Mental Health Services Administration

Housing and Urban Development Department
See Federal Housing Enterprise Oversight Office
NOTICES
Agency information collection activities:
Proposed collection; comment request, 31868–31869

Interior Department
See Fish and Wildlife Service
See National Park Service
See Reclamation Bureau
See Surface Mining Reclamation and Enforcement Office
NOTICES
National Historic Landmark Districts:
Place de France, New Orleans, LA; relocation of Jeanne d'Arc statue to French Quarter, 31869–31871

Internal Revenue Service
PROPOSED RULES
Income taxes:
Solely for voting stock requirement in certain corporate reorganizations, 31770–31772

Justice Department
See National Institute of Justice

Labor Department
See Employment and Training Administration
NOTICES
Grants and cooperative agreements; availability, etc.:
International Child Labor Program, 31876–31877

Mine Safety and Health Federal Review Commission
See Federal Mine Safety and Health Review Commission

National Aeronautics and Space Administration
NOTICES
Meetings:
Advisory Council
Aero-Space Technology Advisory Committee, 31878

National Capital Planning Commission
NOTICES
Senior Executive Service:
Performance Review Board; membership, 31878

National Foundation on the Arts and the Humanities
NOTICES
Meetings:
Leadership Initiatives Advisory Panel, 31878

National Institute of Justice
NOTICES
Meetings:
Future of DNA Evidence National Commission, 31876

National Institute of Standards and Technology
NOTICES
Agency information collection activities:
Proposed collection; comment request, 31825

National Oceanic and Atmospheric Administration
RULES
Fishery conservation and management:
Alaska; fisheries of Exclusive Economic Zone—
Pollock, 31733–31734
West Coast States and Western Pacific fisheries—
Pacific Coast groundfish; correction, 31895
PROPOSED RULES
Marine mammals:
Commercial fishing authorizations—
Tuna purse seine vessels in eastern tropical Pacific Ocean, 31806–31822

National Park Service
NOTICES
Environmental statements; notice of intent:
Chiricahua National Monument, AZ, 31874
Fort Bowie National Historic Site, AZ, 31874–31875
National Register of Historic Places:
Pending nominations, 31875

Navy Department
NOTICES
Meetings:
Naval Academy, Board of Visitors, 31846–31847

Nuclear Regulatory Commission
PROPOSED RULES
Production and utilization facilities; domestic licensing:
Potassium iodide in emergency plans, 31737–31749
NOTICES
Decommissioning plans; sites:
University of Illinois Advanced TRIGA Research Reactor, 31882–31883
Applications, hearings, determinations, etc.:
Clevland Electric Illuminating Co. et al., 31879
Duquesne Light Co. et al., 31880–31881
Texas Utilities Electric Co., 31881–31882

Office of Federal Housing Enterprise Oversight
See Federal Housing Enterprise Oversight Office

Personnel Management Office
PROPOSED RULES
Absence and leave:
Restored annual leave; Year 2000 (Y2K) computer conversion, 31735–31736

Presidio Trust
NOTICES
Environmental statements; notice of intent:
Public Health Service Hospital Complex, 31883

Public Health Service
See Centers for Disease Control and Prevention
See Substance Abuse and Mental Health Services Administration

Reclamation Bureau
NOTICES
Meetings:
Bay-Delta Advisory Council, 31875–31876

Securities and Exchange Commission
NOTICES
Agency information collection activities:
Submission for OMB review; comment request, 31883–31885
Electronic Data Gathering, Analysis, and Retrieval System (EDGAR):
Voluntary Y2K test filings; EDGAR test system availability, 31886
Self-regulatory organizations; proposed rule changes:
American Stock Exchange LLC, 31886–31889
Options Clearing Corp., 31889–31890
Pacific Exchange, Inc., 31890–31892
Applications, hearings, determinations, etc.:
Midland Co., 31885

Small Business Administration
NOTICES
Disaster loan areas:
Georgia, 31892
Illinois, 31893
Iowa, 31893
Texas, 31893
Meetings:
Regional Fairness Boards—
Rocky Mountain States, 31893
South Atlantic States, 31893–31894
Meetings; district and regional advisory councils:
Florida, 31894
Wisconsin, 31894

Substance Abuse and Mental Health Services Administration
NOTICES
Meetings:
SAMHSA special emphasis panels, 31867–31868

Surface Mining Reclamation and Enforcement Office
RULES
Permanent program and abandoned mine land reclamation plan submissions:
Indiana, 31691–31693

Transportation Department
See Federal Aviation Administration

Treasury Department
See Comptroller of the Currency
See Internal Revenue Service

Veterans Affairs Department
RULES
Vocational rehabilitation and education:
Veterans education—
Montgomery GI Bill-Active Duty; rates payable increase, 31693–31695

Separate Parts In This Issue

Part II
Environmental Protection Agency, 31897–31960

Reader Aids
Consult the Reader Aids section at the end of this issue for phone numbers, online resources, finding aids, reminders, and notice of recently enacted public laws.

CFR PARTS AFFECTED IN THIS ISSUE

A cumulative list of the parts affected this month can be found in the Reader Aids section at the end of this issue.

5 CFR

Proposed Rules:

630 31735

7 CFR

Proposed Rules:

1216 31736

10 CFR

Proposed Rules:

50 31737

12 CFR

Proposed Rules:

1 31749
5 31749
7 31749
1750 31756

14 CFR

39 (2 documents) 31687, 31689

Proposed Rules:

39 (5 documents) 31756, 31758, 31760, 41762, 31764

26 CFR

Proposed Rules:

1 31770

29 CFR

2704 31895

30 CFR

914 31691

38 CFR

21 31693

40 CFR

9 31693
63 (3 documents) 31695, 31895, 31898

Proposed Rules:

82 31772

41 CFR

101-47 31731

47 CFR

Proposed Rules:

36 31780
54 31780
69 31780

48 CFR

207 31732
209 31732

50 CFR

600 31895
660 31895
679 31733

Proposed Rules:

216 31806

Rules and Regulations

Federal Register
Vol. 64, No. 113
Monday, June 14, 1999

This section of the FEDERAL REGISTER contains regulatory documents having general applicability and legal effect, most of which are keyed to and codified in the Code of Federal Regulations, which is published under 50 titles pursuant to 44 U.S.C. 1510.

The Code of Federal Regulations is sold by the Superintendent of Documents. Prices of new books are listed in the first FEDERAL REGISTER issue of each week.

DEPARTMENT OF TRANSPORTATION

Federal Aviation Administration

14 CFR Part 39

[Docket No. 97–CE–32–AD; Amendment 39–11189; AD 99–12–05]

RIN 2120–AA64

Airworthiness Directives; The New Piper Aircraft, Inc. Models PA–31, PA–31–300, PA–31–325, PA–31–350, and PA–31P–350 Airplanes

AGENCY: Federal Aviation Administration, DOT.

ACTION: Final rule.

SUMMARY: This amendment adopts a new airworthiness directive (AD) that applies to certain The New Piper Aircraft, Inc. (Piper) Models PA–31, PA–31–300, PA–31–325, PA–31–350, and PA–31P–350 airplanes. This AD requires installing access holes for the inspection of the elevator spar; inspecting the elevator ice protection boots for looseness and reinstalling or replacing the elevator ice protection boots if looseness is found. This AD also requires repetitively inspecting the elevator spars for cracks, and replacing the elevators or elevator spar assemblies with parts of improved design either at a certain time period or when cracks are found, whichever occurs first. This AD is the result of reports of cracks developing in the elevator spar inboard of the outboard hinge location on the affected airplanes. The actions specified by this AD are intended to prevent failure of the elevator spar caused by fatigue cracking, which could result in reduced airplane controllability.

DATES: Effective July 23, 1999.

The incorporation by reference of certain publications listed in the regulations is approved by the Director of the Federal Register as of July 23, 1999.

ADDRESSES: Service information that applies to this AD may be obtained from The New Piper Aircraft, Inc., Customer Services, 2926 Piper Drive, Vero Beach, Florida 32960. This information may also be examined at the Federal Aviation Administration (FAA), Central Region, Office of the Regional Counsel, Attention: Rules Docket No. 97–CE–32–AD, Room 1558, 601 E. 12th Street, Kansas City, Missouri 64106; or at the Office of the Federal Register, 800 North Capitol Street, NW, suite 700, Washington, DC.

FOR FURTHER INFORMATION CONTACT: William Herderich, Aerospace Engineer, FAA, Atlanta Certification Office, One Crown Center, 1895 Phoenix Boulevard, suite 450, Atlanta, Georgia 30349; telephone: (770) 703–6084; facsimile: (770) 703–6097.

SUPPLEMENTARY INFORMATION:

Events Leading to the Issuance of This AD

A proposal to amend part 39 of the Federal Aviation Regulations (14 CFR part 39) to include an AD that would apply to certain Piper Models PA–31, PA–31–300, PA–31–325, PA–31–350, and PA–31P–350 was published in the **Federal Register** as a notice of proposed rulemaking (NPRM) on November 25, 1998 (63 FR 65147). The NPRM proposed to require installing access holes for the inspection of the elevator spar; inspecting the elevator ice protection boots for looseness and reinstalling or replacing the elevator ice protection boots if looseness is found. The NPRM also proposed to require repetitively inspecting the elevator spars for cracks, and replacing the elevators or elevator spar assemblies with parts of improved design either at a certain time period or when cracks are found, whichever occurs first.

Accomplishment of the proposed inspection access holes installation, inspections, and elevator ice protection boots reinstallation or replacement as specified in the NPRM is required in accordance with Piper Service Bulletin No. 998A, dated August 4, 1997.

Accomplishment of the installation of the improved design elevators or elevator spar assemblies as specified in the NPRM is required in accordance with the maintenance manual.

The NPRM was the result of reports of cracks developing in the elevator spar inboard of the outboard hinge location on the affected airplanes.

Interested persons have been afforded an opportunity to participate in the making of this amendment. No comments were received on the proposed rule or the FAA's determination of the cost to the public.

The FAA's Determination

After careful review of all available information related to the subject presented above, the FAA has determined that air safety and the public interest require the adoption of the rule as proposed except for minor editorial corrections. The FAA has determined that these minor corrections will not change the meaning of the AD and will not add any additional burden upon the public than was already proposed.

The FAA's Aging Commuter Aircraft Policy

The actions required in this AD are consistent with the FAA's aging commuter aircraft policy, which briefly states that, when a modification exists that could eliminate or reduce the number of required critical inspections, the modification should be incorporated. This policy is based on the FAA's determination that reliance on critical repetitive inspections on airplanes utilized in commuter service carries an unnecessary safety risk when a design change exists that could eliminate or, in certain instances, reduce the number of those critical inspections. In determining what inspections are critical, the FAA considers (1) the safety consequences of the airplane if the known problem is not detected by the inspection; (2) the reliability of the inspection such as the probability of not detecting the known problem; (3) whether the inspection area is difficult to access; and (4) the possibility of damage to an adjacent structure as a result of the problem.

The alternative to replacing the elevators or elevator spar assemblies with ones of improved design would be to repetitively inspect this area for the life of the airplane.

Cost Impact

The FAA estimates that 1,739 airplanes in the U.S. registry will be affected by this AD.

The inspection holes installation and initial inspections will take

approximately 2 workhours per airplane to accomplish with an average labor rate of approximately $60 an hour. Parts cost approximately $26 per airplane. Based on these figures, the total cost impact of the inspection access holes installation and initial inspections on U.S. operators is estimated to be $253,894, or $146 per airplane.

These figures only take into account the costs of the initial inspection and do not take into account the costs of repetitive inspections. The FAA has no way of determining the number of repetitive inspections an owner/operator will incur over the life of the airplane before the replacement becomes mandatory.

The elevator spar assembly replacements will take approximately 36 workhours per airplane to accomplish with an average labor rate of approximately $60 an hour. Parts cost approximately $600 per airplane ($300 per elevator spar assembly with 2 elevator spar assemblies per airplane). Based on these figures, the total cost impact of the elevator spar assembly replacement on U.S. operators is estimated to be $4,799,640, or $2,760 per airplane.

According to Piper, numerous airplanes already have complied with the initial inspection requirements of this AD, specifically most of the Model PA–31–350 airplanes since many of these are used in commuter service.

Regulatory Impact

The regulations adopted herein will not have substantial direct effects on the States, on the relationship between the national government and the States, or on the distribution of power and responsibilities among the various levels of government. Therefore, in accordance with Executive Order 12612, it is determined that this final rule does not have sufficient federalism implications to warrant the preparation of a Federalism Assessment.

For the reasons discussed above, I certify that this action (1) is not a ''significant regulatory action'' under Executive Order 12866; (2) is not a ''significant rule'' under DOT Regulatory Policies and Procedures (44 FR 11034, February 26, 1979); and (3) will not have a significant economic impact, positive or negative, on a substantial number of small entities under the criteria of the Regulatory Flexibility Act. A copy of the final evaluation prepared for this action is contained in the Rules Docket. A copy of it may be obtained by contacting the Rules Docket at the location provided under the caption **ADDRESSES**.

List of Subjects in 14 CFR Part 39

Air transportation, Aircraft, Aviation safety, Incorporation by reference, Safety.

Adoption of the Amendment

Accordingly, pursuant to the authority delegated to me by the Administrator, the Federal Aviation Administration amends part 39 of the Federal Aviation Regulations (14 CFR part 39) as follows:

PART 39—AIRWORTHINESS DIRECTIVES

1. The authority citation for part 39 continues to read as follows:

Authority: 49 U.S.C. 106(g), 40113, 44701.

§ 39.13 [Amended]

2. Section 39.13 is amended by adding a new airworthiness directive (AD) to read as follows:

99–12–05 The New Piper Aircraft, Inc.: Amendment 39–11189; Docket No. 97–CE–32–AD.

Applicability: The following airplane model and serial numbers, certificated in any category, that are not equipped with the applicable improved design elevators or elevator spar assemblies specified in the ''Replacement Elevator P/N'' and ''Replace Spar P/N'' columns of the ''Material Required Table'' on page 4 of Piper Service Bulletin No. 998A, dated August 4, 1997:

Models	Serial No.
PA–31, PA–31–300, and PA–31–325.	31–2 through 31–8312019
PA–31–350	31–5001 through 31–8553002
PA–31P–350	31P–8414001 through 31P–8414050

Note 1: This AD applies to each airplane identified in the preceding applicability provision, regardless of whether it has been modified, altered, or repaired in the area subject to the requirements of this AD. For airplanes that have been modified, altered, or repaired so that the performance of the requirements of this AD is affected, the owner/operator must request approval for an alternative method of compliance in accordance with paragraph (g) of this AD. The request should include an assessment of the effect of the modification, alteration, or repair on the unsafe condition addressed by this AD; and, if the unsafe condition has not been eliminated, the request should include specific proposed actions to address it.

Compliance: Required as indicated in the body of this AD, unless already accomplished.

To prevent failure of the elevator spar caused by fatigue cracking, which could result in reduced airplane controllability, accomplish the following:

(a) Upon accumulating 2,500 hours time-in-service (TIS) on each elevator spar assembly or within the next 100 hours TIS after the effective date of this AD, whichever occurs later, accomplish the following in accordance with the INSTRUCTIONS section of Piper Service Bulletin No. 998A, dated August 4, 1997:

(1) Install access holes for the inspection of the elevator spar;

(2) Inspect the elevator spars for cracks; and

(3) Inspect the elevator ice protection boots for looseness.

(b) If the elevator ice protection boots are found loose during the inspection required by paragraph (a)(3) of this AD, prior to further flight, reinstall or replace the elevator ice protection boots in accordance with the INSTRUCTIONS section of Piper Service Bulletin No. 998A, dated August 4, 1997.

(c) If no cracks are found in the elevator spars during the inspection required by paragraph (a)(2) of this AD, reinspect the elevator spars for cracks at intervals not to exceed 100 hours TIS, provided no cracks are found (if cracks are found, refer to paragraphs (d) and (d)(1) of this AD).

(d) At whichever of the compliance times presented in paragraphs (d)(1) and (d)(2) of this AD that occurs first, replace each elevator or elevator spar assembly with a part of improved design as specified in the ''Replacement Elevator P/N'' and ''Replace Spar P/N'' columns of the ''Material Required Table'' on page 4 of Piper Service Bulletin No. 998A, dated August 4, 1997. Accomplish these replacements in accordance with the applicable maintenance manual.

(1) Prior to further flight on any elevator spar assembly where any cracks are found during the initial inspection required by paragraph (a)(2) of this AD or any repetitive inspection required by paragraph (c) of this AD; or

(2) Within 1,000 hours TIS after the initial inspection required by paragraph (a)(2) of this AD.

(e) Replacing both the left and right elevators or elevator spar assemblies with parts of improved design as specified in the ''Replacement Elevator P/N'' and ''Replace Spar P/N'' columns of the ''Material Required Table'' on page 4 of Piper Service Bulletin No. 998A, dated August 4, 1997, is considered terminating action for the repetitive inspection requirement of this AD.

(1) This action may be accomplished at any time to terminate the repetitive inspections, but must be accomplished prior to further flight on any elevator spar found cracked or within 1,000 hours TIS after the initial inspection, whichever occurs first.

(2) If one elevator spar assembly is replaced prior to further flight when a crack is found, the other elevator spar assembly must still be repetitively inspected every 100 hours TIS until replacement at 1,000 hours TIS after the initial inspection or when cracks are found, whichever occurs first.

(f) Special flight permits may be issued in accordance with §§ 21.197 and 21.199 of the Federal Aviation Regulations (14 CFR 21.197 and 21.199) to operate the airplane to a location where the requirements of this AD can be accomplished.

(g) An alternative method of compliance or adjustment of the initial or repetitive

compliance times that provides an equivalent level of safety may be approved by the Manager, Atlanta Aircraft Certification Office (ACO), One Crown Center, 1895 Phoenix Boulevard, Suite 450, Atlanta, Georgia 30349. The request shall be forwarded through an appropriate FAA Maintenance Inspector, who may add comments and then send it to the Manager, Atlanta ACO.

Note 2: Information concerning the existence of approved alternative methods of compliance with this AD, if any, may be obtained from the Atlanta ACO.

(h) The installations, inspections, and replacements required by this AD shall be done in accordance with Piper Service Bulletin No. 998A, dated August 4, 1997. This incorporation by reference was approved by the Director of the Federal Register in accordance with 5 U.S.C. 552(a) and 1 CFR part 51. Copies may be obtained from The New Piper Aircraft, Inc., 2926 Piper Drive, Vero Beach, Florida 32960. Copies may be inspected at the FAA, Central Region, Office of the Regional Counsel, Room 1558, 601 E. 12th Street, Kansas City, Missouri, or at the Office of the Federal Register, 800 North Capitol Street, NW, suite 700, Washington, DC.

(i) This amendment becomes effective on July 23, 1999.

Issued in Kansas City, Missouri, on June 2, 1999.

Marvin R. Nuss,

Acting Manager, Small Airplane Directorate, Aircraft Certification Service.

[FR Doc. 99–14535 Filed 6–11–99; 8:45 am]

BILLING CODE 4910–13–P

DEPARTMENT OF TRANSPORTATION

Federal Aviation Administration

14 CFR Part 39

[Docket No. 99–CE–22–AD; Amendment 39–11193; AD 99–12–02]

RIN 2120–AA64

Airworthiness Directives; Raytheon Aircraft Company Beech Models 45 (YT–34), A45 (T–34A, B–45), and D45 (T–34B) Airplanes

AGENCY: Federal Aviation Administration, DOT.

ACTION: Final rule; request for comments.

SUMMARY: This document publishes in the **Federal Register** an amendment adopting Airworthiness Directive (AD) 99–12–02, which was sent previously to all known U.S. owners and operators of Raytheon Aircraft Corporation (Raytheon) Beech Models 45 (YT–34), A45 (T–34A, B–45), and D45 (T–34B) airplanes. This AD requires incorporating operating limitations that restrict operation of the airplanes to normal category operation and prohibit them from acrobatic and utility category operations; limit the flight load factor to 0 to 2.5 G; and limit the maximum airspeed to 175 miles per hour (mph) (152 knots). This AD resulted from a report of an in-flight separation of the right wing on a Raytheon Beech Model A45 (T–34A) airplane. The actions specified by this AD are intended to assure the operational safety of the above-referenced airplanes.

DATES: Effective July 9, 1999, to all persons except those to whom it was made immediately effective by priority letter AD 99–12–02, issued May 28, 1999, which contained the requirements of this amendment.

Comments for inclusion in the Rules Docket must be received on or before July 30, 1999.

ADDRESSES: Submit comments in triplicate to the Federal Aviation Administration (FAA), Central Region, Office of the Regional Counsel, Attention: Rules Docket 99–CE–22–AD, Room 1558, 601 E. 12th Street, Kansas City, Missouri 64106.

Information related to this AD may be examined at the Rules Docket at the address above.

FOR FURTHER INFORMATION CONTACT: Mr. Paul Nguyen, Aerospace Engineer, FAA, Wichita Aircraft Certification Office, 1801 Airport Road, Room 100, Mid-Continent Airport, Wichita, Kansas, 67209, telephone: (316) 946-4125; facsimile: (316) 946–4407.

SUPPLEMENTARY INFORMATION:

Discussion

On May 28, 1999, the FAA issued priority letter AD 99–12–02, which applies to all Raytheon Beech Models 45 (YT–34), A45 (T–34A, B–45), and D45 (T–34B) airplanes. That AD resulted from a report of an in-flight separation of the right wing on a Raytheon Beech Model A45 (T–34A) airplane. The airplane was involved in mock aerial combat with another Beech Model A45 (T–34A) airplane.

The left wing remained attached to the airplane following separation of the right wing. As the airplane made ground contact, the left wing forward and rear spars and wing attach fittings sustained overload fractures.

Examination of the right wing revealed structural fatigue cracks at several of the fracture surfaces. Although it did not separate from the airplane, the left wing also showed structural fatigue cracks at several locations.

Priority letter AD 99–12–02 requires fabricating two placards using letters of at least 1/10-inch in height with each consisting of the following words, and installing these placards on the airplane instrument panels (one on the front panel and one on the rear panel) next to the airspeed indicators within the pilot's clear view:

Never exceed speed, Vne-175 MPH (152 knots) IAS; Normal Acceleration (G) Limits −0, and +2.5; ACROBATIC MANEUVERS PROHIBITED.

This AD also requires marking the airspeed indicators to specify the limitations referenced in the placards, and incorporating a copy of the AD into the Limitations Section of the Airplane Flight Manual (AFM).

The FAA's Determination and Explanation of the AD

Since an unsafe condition was identified that is likely to exist or develop in other Raytheon Beech Models 45 (YT–34), A45 (T–34A, B–45), and D45 (T–34B) airplanes of the same type design airplanes, the FAA:

1. Determined that the Beech Models 45 (YT–34), A45 (T–34A, B–45), and D45 (T–34B) airplanes should not be operated without restrictions until the wing structure has been inspected in accordance with inspection procedures approved by the FAA, and the structure is found to be free of cracks;

2. Determined that all of the above-referenced airplanes should be restricted to normal category operation and prohibited from acrobatic and utility category operations; the flight load factor should be limited to 0 to 2.5 G; and the maximum airspeed should be limited to 175 miles per hour (mph) (152 knots);

3. Determined that immediate AD action should be taken to assure the operational safety of these airplanes; and

4. Issued AD 99–12–02 as a priority letter on May 28, 1999.

Determination of the Effective Date of the AD

Since it was found that immediate corrective action was required, notice and opportunity for prior public comment thereon were impracticable and contrary to the public interest, and good cause existed to make the AD effective immediately by individual letters issued on May 28, 1999, to all known U.S. operators of Raytheon Beech Models 45 (YT–34), A45 (T–34A, B–45), and D45 (T–34B) airplanes. These conditions still exist, and the AD is hereby published in the **Federal Register** as an amendment to section 39.13 of the Federal Aviation Regulations (14 CFR 39.13) to make it effective as to all persons.

Differences Between This AD and the Service Information and Possible Follow-Up Action

The actions required by this AD are different than those recommended in Raytheon Safety Communique No. 162, Rev. 1, dated June 1999, which specifies not operating the affected airplanes. Based on the service history of the wing structure of the Raytheon Beech Models 45 (YT–34), A45 (T–34A, B–45), and D45 (T–34B) airplanes and all available information related to the referenced accident, the FAA has determined that the restrictions imposed by this AD will continue to assure the operational safety of these airplanes until detailed inspection procedures are developed.

When inspection procedures are developed for the wing structure of the affected airplanes, the FAA will evaluate these procedures and will decide whether to initiate further rulemaking action. Further action may include alleviating the restrictions imposed by this AD.

Comments Invited

Although this action is in the form of a final rule that involves requirements affecting immediate flight safety and, thus, was not preceded by notice and opportunity to comment, comments are invited on this rule. Interested persons are invited to comment on this rule by submitting such written data, views, or arguments as they may desire. Communications should identify the Rules Docket number and be submitted in triplicate to the address specified above. All communications received on or before the closing date for comments will be considered, and this rule may be amended in light of the comments received. Factual information that supports the commenter's ideas and suggestions is extremely helpful in evaluating the effectiveness of the AD action and determining whether additional rulemaking action would be needed.

Comments are specifically invited on the overall regulatory, economic, environmental, and energy aspects of the rule that might suggest a need to modify the rule. All comments submitted will be available, both before and after the closing date for comments, in the Rules Docket for examination by interested persons. A report that summarizes each FAA-public contact concerned with the substance of this AD will be filed in the Rules Docket.

Commenters wishing the FAA to acknowledge receipt of their comments submitted in response to this rule must submit a self-addressed, stamped postcard on which the following statement is made: ''Comments to Docket No. 99–CE–22–AD.'' The postcard will be date stamped and returned to the commenter.

Regulatory Impact

The regulations adopted herein will not have substantial direct effects on the States, on the relationship between the national government and the States, or on the distribution of power and responsibilities among the various levels of government. Therefore, in accordance with Executive Order 12612, it is determined that this final rule does not have sufficient federalism implications to warrant the preparation of a Federalism Assessment.

The FAA has determined that this regulation is an emergency regulation that must be issued immediately to correct an unsafe condition in aircraft, and is not a ''significant regulatory action'' under Executive Order 12866. It has been determined further that this action involves an emergency regulation under DOT Regulatory Policies and Procedures (44 FR 11034, February 26, 1979). If it is determined that this emergency regulation otherwise would be significant under DOT Regulatory Policies and Procedures, a final regulatory evaluation will be prepared and placed in the Rules Docket. A copy of it, if filed, may be obtained from the Rules Docket at the location provided under the caption **ADDRESSES.**

List of Subjects in 14 CFR Part 39

Air transportation, Aircraft, Aviation safety, Safety.

Adoption of the Amendment

Accordingly, pursuant to the authority delegated to me by the Administrator, the Federal Aviation Administration amends part 39 of the Federal Aviation Regulations (14 CFR part 39) as follows:

PART 39—AIRWORTHINESS DIRECTIVES

1. The authority citation for part 39 continues to read as follows:

Authority: 49 U.S.C. 106(g), 40113, 44701.

§ 39.13 [Amended]

2. Section 39.13 is amended by adding a new airworthiness directive (AD) to read as follows:

99–12–02 Raytheon Aircraft Corporation: Amendment 39-11193; Docket No. 99–CE–22–AD.

Applicability: Beech Models 45 (YT–34), A45 (T–34A, B-45), and D45 (T–34B) airplanes, all serial numbers, certificated in any category.

Note 1: This AD applies to each airplane identified in the preceding applicability provision, regardless of whether it has been modified, altered, or repaired in the area subject to the requirements of this AD. For airplanes that have been modified, altered, or repaired so that the performance of the requirements of this AD is affected, the owner/operator must request approval for an alternative method of compliance in accordance with paragraph (e) of this AD. The request should include an assessment of the effect of the modification, alteration, or repair on the unsafe condition addressed by this AD; and, if the unsafe condition has not been eliminated, the request should include specific proposed actions to address it.

Compliance: Required as indicated in the body of this AD, unless already accomplished.

To assure the operational safety of the above-referenced airplanes, accomplish the following:

(a) Prior to further flight after the effective date of this AD, accomplish the following:

(1) Fabricate two placards using letters of at least 1/10-inch in height with each consisting of the following words:

Never exceed speed, Vne-175 MPH (152 knots) IAS; Normal Acceleration (G) Limits 0, and +2.5; ACROBATIC MANEUVERS PROHIBITED.''

(2) Install these placards on the airplane instrument panels (one on the front panel and one on the rear panel) next to the airspeed indicators within the pilot's clear view.

(3) Insert a copy of this AD into the Limitations Section of the Airplane Flight Manual (AFM).

(b) Within the next 10 hours time-in-service (TIS) after the effective date of this AD, modify the airspeed indicator glass by accomplishing the following:

(1) Place a red radial line on the indicator glass at 175 miles per hour (mph) (152 knots).

(2) Place a white slippage index mark between the airspeed indicator glass and the case to visually verify that the glass has not rotated.

(c) Within the next 10 hours TIS after the effective date of this AD, mark the outside surface of the ''g'' meters with lines of approximately 1/16-inch by 3/16-inch, as follows:

(1) A red line at 0 and 2.5; and

(2) A white slippage mark between each ''g'' meter glass and case to visually verify that the glass has not rotated.

(d) Fabricating and installing the placards and inserting a copy of this AD into the AFM as required by paragraphs (a)(1), (a)(2), and (a)(3) of this AD, respectively, may be performed by the owner/operator holding at least a private pilot certificate as authorized by § 43.7 of the Federal Aviation Regulations (14 CFR 43.7), and must be entered into the aircraft records showing compliance with this AD in accordance with § 43.9 of the Federal Aviation Regulations (14 CFR 43.9).

(e) An alternative method of compliance or adjustment of the compliance times that provides an equivalent level of safety may be approved by the Manager, Wichita Aircraft Certification Office (ACO), 1801 Airport Road, Rm. 100, Mid-Continent Airport, Wichita, Kansas, 67209. The request shall be forwarded through an appropriate FAA

Maintenance Inspector, who may add comments and then send it to the Manager, Wichita ACO.

Note 2: Information concerning the existence of approved alternative methods of compliance with this AD, if any, may be obtained from the Wichita ACO.

(f) Information related to this priority letter AD may be examined at the FAA, Central Region, Office of the Regional Counsel, Room 1558, 601 E. 12th Street, Kansas City, Missouri 64106.

(g) This amendment becomes effective on July 9, 1999, to all persons except those persons to whom it was made immediately effective by priority letter AD 99–12–02, issued May 28, 1999, which contains the requirements of this amendment.

Issued in Kansas City, Missouri, on June 4, 1999.

Marvin R. Nuss,

Acting Manager, Small Airplane Directorate, Aircraft Certification Service.

[FR Doc. 99–14932 Filed 6–11–99; 8:45 am]

BILLING CODE 4910–13–P

DEPARTMENT OF THE INTERIOR

Office of Surface Mining Reclamation and Enforcement

30 CFR Part 914

[SPATS No. IN–145–FOR; State Program Amendment No. 98–1]

Indiana Regulatory Program

AGENCY: Office of Surface Mining Reclamation and Enforcement, Interior.

ACTION: Final rule; approval of amendment.

SUMMARY: The Office of Surface Mining Reclamation and Enforcement (OSM) is approving an amendment to the Indiana regulatory program (Indiana program) under the Surface Mining Control and Reclamation Act of 1977 (SMCRA). Indiana proposed reference changes in its surface and underground mining rules concerning application requirements for geology descriptions and public participation. Indiana also proposed to add a new provision to its rule pertaining to surface mining application requirements for postmining land use information. Indiana intends to revise its program to be consistent with the corresponding Federal regulations.

EFFECTIVE DATE: June 14, 1999.

FOR FURTHER INFORMATION CONTACT: Andrew R. Gilmore, Director, Indianapolis Field Office, Office of Surface Mining, Minton-Capehart Federal Building, 575 North Pennsylvania Street, Room 301, Indianapolis, Indiana 46204–1521. Telephone (317) 226–6700. Internet: INFOMAIL@indgw.osmre.gov.

SUPPLEMENTARY INFORMATION:

I. Background on the Indiana Program
II. Submission of the Proposed Amendment
III. Director's Findings
IV. Summary and Disposition of Comments
V. Director's Decision
VI. Procedural Determinations

I. Background on the Indiana Program

On July 29, 1982, the Secretary of the Interior conditionally approved the Indiana program. You can find background information on the Indiana program, including the Secretary's findings, the disposition of comments, and the conditions of approval in the July 26, 1982, **Federal Register** (47 FR 32107). You can find later actions on the Indiana program at 30 CFR 914.10, 914.15, 914.16, and 914.17.

II. Submission of the Proposed Amendment

By letter dated March 8, 1999 (Administrative Record No. IND–1633), Indiana sent us an amendment to its program under SMCRA. Indiana sent the amendment at its own initiative. Indiana proposed to amend the Indiana Administrative Code (IAC) at 310 IAC 12–3 regarding permit application requirements for geology descriptions, postmining land uses, and public participation.

We announced receipt of the amendment in the March 25, 1999, **Federal Register** (64 FR 14412). In the same document, we opened the public comment period and provided an opportunity for a public hearing or meeting on the adequacy of the amendment. The public comment period closed on April 26, 1999. Because no one requested a public hearing or meeting, we did not hold one.

III. Director's Findings

Following, under SMCRA and the Federal regulations at 30 CFR 732.15 and 732.17, are our findings concerning the amendment.

1. 310 IAC 12–3–31 Surface Mining Permit Applications; Geology Description and 310 IAC 12–3–69 Underground Mining Permit Applications; Geology Description

a. At 310 IAC 12–3–31(a)(3), Indiana replaced a reference to ''IC 13–4.1'' with a reference to ''IC 14–34.'' This change was necessary because Indiana recodified the Indiana Surface Coal Mining and Reclamation Act, effective July 1, 1995. Indiana repealed Indiana Code (IC) 13–4.1 and recodified its substantive provisions at IC 14–8 and 14–34. We find that this change will not make Indiana's regulation less effective than the counterpart Federal regulation at 30 CFR 780.22(a)(3).

b. At 310 IAC 12–3–31(c), 12–3–69(a)(3), and 12–3–69(c)(3), Indiana replaced references to ''this rule'' with references to ''this article.'' Since Article 12 contains all of the State's rules for coal mining and reclamation operations, the references to ''this article'' in Indiana's rules are consistent with the references to ''this chapter'' in the counterpart Federal regulations at 30 CFR 780.22(c), 784.22(a)(3), and 784.22(c)(3). Therefore, Indiana's amended regulations at 310 IAC 12–3–31(c), 12–3–69(a)(3), and 12–3–69(c)(3) are no less effective than the counterpart Federal regulations.

c. At 310 IAC 12–3–69(d), Indiana replaced a reference to ''subsection (b)'' with a reference to ''subsections (b)(2) and (b)(3).'' As revised, the director may waive in writing only the permit application geologic information requirements for subsections (b)(2) and (b)(3) if that information is unnecessary because other reliable information is available. This is consistent with the requirements of the counterpart Federal regulation at 30 CFR 784.22(d). We find that Indiana's amended regulation at 310 IAC 12–3–69(d) is no less effective than the counterpart Federal regulation.

2. 310 IAC 12–3–48 Surface Mining Permit Applications; Reclamation and Operations Plan; Postmining Land Uses

Indiana proposes to revise this rule by adding a new provision at subsection (a)(3) that requires the detailed description of the proposed land use in the reclamation plan to include an explanation of the consideration given to making all of the proposed surface mining activities consistent with surface owner plans and applicable state and local land use plans and programs. Indiana's new provision at 310 IAC 12–3–48(a)(3) is substantively the same as the counterpart Federal regulation provision at 30 CFR 780.23(b)(3), and we are approving it.

3. 310 IAC 12–3–106 Permit Applications; Public Participation

At 310 IAC 12–3–106(a)(8), Indiana proposes to correct a reference to its experimental practice regulatory provisions by replacing the reference to ''section 94'' with a reference to ''section 94.1.'' Indiana repealed section 94 and added section 94.1 effective October 1, 1993. We find that this correction will make Indiana's regulation no less effective than the counterpart Federal regulation at 30 CFR 773.13(a)(vi).

4. IC 14–34–8–8 Bond Pool

In the April 20, 1992, **Federal Register** (57 FR 14350), we approved IC 13–4.1–6.5–8 [currently IC 14–34–8–8] with two additional requirements. At 30 CFR 914.16(h)(1), we required Indiana to complete an actuarial study of the surface coal mine reclamation bond pool as set forth in the OSM and Indiana Department of Natural Resources Cooperative Agreement GR 193184 and to initiate action to implement any forthcoming recommendations on participant fees and other matters affecting the long-term solvency of the pool. At 30 CFR 914.16(h)(2), we required Indiana to recalculate the performance bonds for all existing bond pool members and, if indicated, require the submission of additional Phase I performance bond. In response to these requirements, Indiana submitted an Actuarial Study Final Report dated June 1992 (Administrative Record No. IND–1124) and completed the bond recalculations. In 1994, we conducted a review of the Indiana bond pool, including bond pool operation, solvency, bond adjustments, and bond replacements. On page 11 of the October 14, 1994, annual report for Indiana (Administrative Record No. IND–1640), we reported that Indiana operated the bond pool consistent with the assumptions used in the actuarial study and that the bond pool was solvent. We also found that Indiana conducted bond evaluation and made bond adjustments as needed. Therefore, we are taking this opportunity to remove the requirements codified at 30 CFR 914.16(h)(1) and (h)(2).

IV. Summary and Disposition of Comments

Public Comments

We requested public comments on the proposed amendment, but did not receive any.

Federal Agency Comments

Under 30 CFR 732.17(h)(11)(i), we requested comments on the amendment from various Federal agencies with an actual or potential interest in the Indiana program (Administrative Record No. IND–1638).

By letter dated April 15, 1999 (Administrative Record No. IND–1642), the Fish and Wildlife Service (FWS) commented about Indiana's proposed new provision at 310 IAC 12–3–48(a)(3). This new provision concerns the detailed description of the proposed land use in the reclamation plan. It requires the applicant to include an explanation of the consideration given to making all of the proposed surface mining activities consistent with surface owner plans and applicable state and local land use plans and programs.

The FWS commented that it seems inappropriate for the State to pass a regulation requiring changes in its coal regulatory program before OSM has reviewed and approved the changes.

The Indiana Surface Coal Mining and Reclamation Act at Indiana Code (IC) 14–34–2–4(b) allows Indiana to submit a formal amendment to OSM only after the provisions of the amendment have been approved by the governor or have become law. We approved IC 14–34–2–4(b) on April 10, 1996 (61 FR 15891), after finding that neither SMCRA nor the Federal regulations contain specific requirements regarding the administrative or legislative procedures in the State for rulemaking. However, the Federal regulation at 30 CFR 732.17(g) requires States to submit to OSM as an amendment any proposed changes to laws or regulations of an approved State program. It also specifies that these laws or regulations must not take effect for purposes of a State program until approved by OSM.

In the March 1, 1999, Indiana Register (22 IR 1941), Indiana published a final rule notice of the proposed changes to the Indiana program being considered by OSM in this final rule. The Indiana final rule notice specified that the amendments to 310 IAC 12–3 will not become effective until the Indiana Department of Natural Resources receives notice of approval from OSM and publishes notice of that approval in the Indiana Register. Therefore, even though the Governor of Indiana approved the changes to 310 IAC 12–3–48 and the changes were published as final in the Indiana Register, they will not become effective until approved by OSM.

The FWS also commented that a balance must be maintained between consideration of the wishes of surface land owners and local planning entities and the need to adhere to the environmental protection requirements of SMCRA and other Federal and State environmental laws and regulations. The FWS recommended that in situations where those laws and regulations take precedent over local plans and preferences, the ''consideration'' should include an explanation of why the conflict occurred, along with a brief explanation of the purpose and requirements of the relevant laws and regulations.

As discussed in Finding 2, Indiana's new provision at 310 IAC 12–3–48(a)(3) is substantively the same as the counterpart Federal regulation provision at 30 CFR 780.23(b)(3). However, we did provide the above comment and recommendation to Indiana for its consideration when implementing the new provision.

Environmental Protection Agency (EPA)

Under 30 CFR 732.17(h)(11)(ii), we are required to get a written agreement from the EPA for those provisions of the program amendment that relate to air or water quality standards issued under the authority of the Clean Water Act (33 U.S.C. 1251 *et seq.*) or the Clean Air Act (42 U.S.C. 7401 *et seq.*). None of the revisions that Indiana proposed to make in this amendment pertain to air or water quality standards. Therefore, we did not ask the EPA to agree on the amendment.

Under 30 CFR 732.17(h)(11)(i), we requested comments on the amendment from the EPA (Administrative Record No. IND–1638). By letter dated April 26, 1999, EPA stated that it had no comments to offer (IND–1646).

State Historical Preservation Officer (SHPO) and the Advisory Council on Historic Preservation (ACHP)

Under 30 CFR 732.17(h)(4), we are required to request comments from the SHPO and ACHP on amendments that may have an effect on historic properties. On March 17, 1999, we requested comments on Indiana's amendment (Administrative Record No. IND–1638), but neither responded to our request.

V. Director's Decision

Based on the above findings, we approve the amendment as sent to us by Indiana on March 8, 1999.

To implement this decision, we are amending the Federal regulations at 30 CFR Part 914, which codify decisions concerning the Indiana program. We are making this final rule effective immediately to expedite the State program amendment process and to encourage Indiana to bring its program into conformity with the Federal standards. SMCRA requires consistency of State and Federal standards.

VI. Procedural Determinations

Executive Order 12866

The Office of Management and Budget (OMB) exempts this rule from review under Executive Order 12866 (Regulatory Planning and Review).

Executive Order 12988

The Department of the Interior conducted the reviews required by section 3 of Executive Order 12988 (Civil Justice Reform) and determined that, to the extent allowed by law, this rule meets the applicable standards of

subsections (a) and (b) of that section. However, these standards are not applicable to the actual language of State regulatory programs and program amendments since each such program is drafted and promulgated by a specific State, not by OSM. Under sections 503 and 505 of SMCRA (30 U.S.C. 1253 and 1255) and 30 CFR 730.11, 732.15, and 732.17(h)(10), decisions on State regulatory programs and program amendments must be based solely on a determination of whether the submittal is consistent with SMCRA and its implementing Federal regulations and whether the other requirements of 30 CFR Parts 730, 731, and 732 have been met.

National Environmental Policy Act

This rule does not require an environmental impact statement since section 702(d) of SMCRA (30 U.S.C. 1292(d)) provides that agency decisions on State regulatory program provisions do not constitute major Federal actions within the meaning of section 102(2)(C) of the National Environmental Policy Act (42 U.S.C. 4332(2)(C)).

Paperwork Reduction Act

This rule does not contain information collection requirements that require approval by OMB under the Paperwork Reduction Act (44 U.S.C. 3507 *et seq.*).

Regulatory Flexibility Act

The Department of the Interior has determined that this rule will not have a significant economic impact on a substantial number of small entities under the Regulatory Flexibility Act (5 U.S.C. 601 *et seq.*). The State submittal which is the subject of this rule is based upon corresponding Federal regulations for which an economic analysis was prepared and certification made that such regulations would not have a significant economic effect upon a substantial number of small entities. Therefore, this rule will ensure that existing requirements previously published by OSM will be implemented by the State. In making the determination as to whether this rule would have a significant economic impact, the Department relied upon the data and assumptions for the corresponding Federal regulations.

Unfunded Mandates

OSM has determined and certifies under the Unfunded Mandates Reform Act (2 U.S.C. 1502 *et seq.*) that this rule will not impose a cost of $100 million or more in any given year on local, state, or tribal governments or private entities.

List of Subjects in 30 CFR Part 914

Intergovernmental relations, Surface mining, Underground mining.

Dated: May 26, 1999.

Brent Wahlquist,

Regional Director, Mid-Continent Regional Coordinating Center.

For the reasons set out in the preamble, 30 CFR Part 914 is amended as set forth below:

PART 914—INDIANA

1. The authority citation for Part 914 continues to read as follows:

Authority: 30 U.S.C. 1201 *et seq.*

2. Section 914.15 is amended in the table by adding a new entry in chronological order by ''Date of final publication'' to read as follows:

§ 914.15 Approval of Indiana regulatory program amendments.

* * * * *

Original amendment submission date	Date of final publication	Citation/description
*	*	*
March 8, 1999	June 14, 1999	310 IAC 12–3–31(a)(3), (c); 12–3–48(a)(3); 12–3–69(a)(3), (c)(3), (d); 12–3–106(a)(8)

§ 914.16 [Amended]

3. Section 914.16 is amended by removing and reserving paragraph (h).

[FR Doc. 99–15028 Filed 6–11–99; 8:45 am]

BILLING CODE 4310–05–P

DEPARTMENT OF VETERANS AFFAIRS

38 CFR Part 21

RIN 2900–AJ37

Veterans Education: Increase in Educational Assistance Rates

AGENCY: Department of Veterans Affairs.

ACTION: Final rule.

SUMMARY: By statute the monthly rates of basic educational assistance payable to veterans and servicemembers under the Montgomery GI Bill—Active Duty must be adjusted each fiscal year in accordance with a statutory formula. The Veterans Benefits Assistance Act of 1998 provides an increase of approximately 20% that supersedes the otherwise applicable statutory increase for Fiscal Year 1999 (October 1, 1998, through September 30, 1999). The regulations governing rates of basic educational assistance payable under the Montgomery GI Bill—Active Duty are changed to show the rates indicated in the Act for Fiscal Year 1999. Regular annual adjustments to these rates will resume commencing with Fiscal Year 2000.

DATES: *Effective Date:* This final rule is effective October 1, 1998.

FOR FURTHER INFORMATION CONTACT: William G. Susling, Jr., Education Adviser, Education Service, Veterans Benefits Administration (202) 273–7187.

SUPPLEMENTARY INFORMATION: As provided by the Veterans Benefits Act of 1998 (Pub. L. 105–178, Subtitle B), the rates of basic educational assistance under the Montgomery GI Bill—Active Duty payable to students pursuing a program of education full time must be increased by approximately 20%.

It should be noted that some veterans will receive an increase in monthly payments that will be less than 20%. The increase does not apply to additional amounts payable by the Secretary of Defense to individuals with skills or a specialty in which there is a critical shortage of personnel (so-called ''kickers''). It does not apply to amounts payable for dependents. Veterans who previously had eligibility under the Vietnam Era GI Bill receive monthly payments that are in part based upon basic educational assistance and in part based upon the rates payable under the Vietnam Era GI Bill. Only that portion attributable to basic educational assistance is increased by 20%.

Public Law 105–178, Subtitle B increases the full-time rates for institutional training. These increased rates result in proportionate increases in the benefits payable for other types of training whose rates are based on the

institutional training rates. For example, monthly rates payable to veterans in apprenticeship or other on-job training are set by statute at a given percentage of the full-time institutional rate.

38 U.S.C. 3015(a) and (b) require that the Department of Veterans Affairs (VA) pay part-time students at appropriately reduced rates. Since the first student became eligible for assistance under the Montgomery GI Bill—Active Duty in 1985, VA has paid three-quarter-time students and one-half-time students at 75% and 50% of the full-time institutional rate, respectively. Students pursuing a program of education at less than one-half but more than one-quarter-time have had their payments limited to 50% or less of the full-time institutional rate. Similarly, students pursuing a program of education at one-quarter-time or less have had their payments limited to 25% or less of the full-time institutional rate. Changes are made consistent with the authority and formula described in this paragraph.

Nonsubstantive changes also are made for the purpose of clarity.

Substantive changes made by this final rule merely reflect statutory requirements and adjustments made based on previously established formulas. Accordingly, there is a basis for dispensing with prior notice and comment and delayed effective date provisions of 5 U.S.C. 552 and 553.

The Secretary of Veterans Affairs hereby certifies that this final rule will not have a significant economic impact on a substantial number of small entities as they are defined in the Regulatory Flexibility Act, 5 U.S.C. 601–612 and does not directly affect small entities. This final rule directly affects only individuals. Pursuant to 5 U.S.C. 605(b), this final rule, therefore, is exempt from the initial and final regulatory flexibility analyses requirements of sections 603 and 604.

The Catalog of Federal Domestic Assistance numbers for the programs affected by this final rule in 64.117 and 64.124.

List of Subjects in 38 CFR Part 21

Administrative practice and procedure, Armed forces, Civil rights, Claims, Colleges and universities, Conflict of interests, Defense Department, Education, Employment, Grant programs-education, Grant programs-veterans, Health programs, Loan programs-education, Loan programs-veterans, Manpower training programs, Reporting and recordkeeping requirements, Schools, Travel and transportation expenses, Veterans, Vocational education, Vocational rehabilitation.

Approved: December 4, 1998.

Togo D. West, Jr.,

Secretary of Veterans Affairs.

For the reasons set out above, 38 CFR part 21, subpart K is amended as set forth below.

PART 21—VOCATIONAL REHABILITATION AND EDUCATION

Subpart K—All Volunteer Force Educational Assistance Program (Montgomery GI Bill—Active Duty)

1. The authority citation for part 21, subpart K, continues to read as follows:

Authority: 38 U.S.C. 501(a), chs. 30, 36, unless otherwise noted.

2. In § 21.7136, paragraphs (b), (c)(1), (c)(2), and (c)(3) are revised to read as follows:

§ 21.7136 Rates of payment of basic educational assistance.

* * * * *

(b) *Rates.* (1) Except as elsewhere provided in this section or in § 21.7139, the monthly rate of basic educational assistance payable for training that occurs after September 30, 1998, and before October 1, 1999, to a veteran whose service is described in paragraph (a) of this section is the rate stated in the following table:

Training	Monthly rate
Full time	$528.00
¾ time	396.00
½ time	264.00
Less than ½ but more than ¼ time	264.00
¼ time	132.00

(Authority: 38 U.S.C. 3015)

(2) If a veteran's service is described in paragraph (a) of this section, the monthly rate payable to the veteran for pursuit of apprenticeship or other on-job training that occurs after September 30, 1998, and before October 1, 1999, is the rate stated in the following table:

Training period	Monthly rate
First six months of pursuit of training	$396.00
Second six months of pursuit of training	290.40
Remaining pursuit of training	184.80

(Authority: 38 U.S.C. 3015, 3032(c))

(3) If a veteran's service is described in paragraph (a) of this section, the monthly rate of basic educational assistance payable to the veteran for pursuit of a cooperative course is:

(i) $439.85 for training that occurs after September 30, 1997, and before October 1, 1998; and

(ii) $528.00 for training that occurs on or after October 1, 1998, and before October 1, 1999.

(Authority: 38 U.S.C. 3015)

(c) * * *

(1) Except as elsewhere provided in this section or in § 21.7139, the monthly rate of basic educational assistance payable to a veteran for training that occurs after September 30, 1998, and before October 1, 1999, is the rate stated in the following table.

Training	Monthly rate
Full time	$429.00
¾ time	321.75
½ time	214.50
Less than ½ but more than ¼ time	214.50
¼ time or less	107.25

(Authority: 38 U.S.C. 3015, 3032(c))

(2) The monthly rate of educational assistance payable to a veteran for pursuit of apprenticeship or other on-job training that occurs after September 30, 1998, and before October 1, 1999, is the rate stated in the following table:

Training period	Monthly rate
First six months of pursuit of training	$321.75
Second six months of pursuit of training	235.95
Remaining pursuit of training	150.15

(Authority: 38 U.S.C. 3015, 3032(c))

(3) The monthly rate of basic educational assistance payable to a veteran for pursuit of a cooperative course is:

(i) $357.38 for training that occurs after September 30, 1997, and before October 1, 1998; and

(ii) $429.00 for training that occurs on or after October 1, 1998, and before October 1, 1999.

(Authority: 38 U.S.C. 3015)

3. In § 21.7137, paragraph (c)(2) introductory text is amended by removing ''1997, and before October 1, 1998'' and adding, in its place ''1998, and before October 1, 1999''; paragraph (c)(2)(i) is amended by removing ''$627.85'' and adding, in its place ''$716.00''; paragraph (c)(2)(ii) is amended by removing ''$471.39'' and adding, in its place, ''$537.50''; paragraph (c)(2)(iii) is amended by removing ''$313.93'' and adding, in its place ''$358.00''; paragraph (c)(2)(iv) is amended by removing ''$156.96'' and adding, in its place ''$179.00''; and paragraph (a) is revised to read as follows:

§ 21.7137 Rates of payment of basic educational assistance for individuals with remaining entitlement under 38 U.S.C. ch. 34.

(a) *Minimum rates.* (1) Except as elsewhere provided in this section, the monthly rate of basic educational assistance for training that occurs after September 30, 1998, and before October 1, 1999, is the rate stated in the following table:

Training	Monthly rate			
	No dependents	One dependent	Two dependents	Additional for each additional dependent
Full time	$716.00	$752.00	$783.00	$16.00
¾ time	537.50	564.00	587.50	12.00
½ time	358.00	376.00	391.50	8.50
Less than ½ but more than ¼ time	358.00	.....	.....	.....
¼ time or less	179.00	.....	.....	.....

(Authority: 38 U.S.C. 3015(e), (f), and (g))

(2) For veterans pursuing apprenticeship or other on-job training, the monthly rate of basic educational assistance for training that occurs after September 30, 1998, and before October 1, 1999, is the rate stated in the following table:

Training	Monthly rate			
	No dependents	One dependent	Two dependents	Additional for each additional dependent
1st six months of pursuit of program	$498.75	$511.13	$522.00	$5.25
2nd six months of pursuit of program	346.78	356.13	363.83	3.85
3rd six months of pursuit of program	208.60	214.73	219.45	2.45
Remaining pursuit of program	196.70	202.48	207.73	2.45

(Authority: 38 U.S.C. 3015(e), (f), (g))

(3) The monthly rate payable to a veteran who is pursuing a cooperative course is the rate stated in the following table:

Training period	Monthly rate			
	No dependents	One dependent	Two dependents	Additional for each additional dependent
Oct. 1, 1997–Sept. 30, 1998	$627.85	$663.85	$694.85	$16.00
On or after Oct. 1, 1998, and before Oct. 1, 1999	716.00	752.00	783.00	16.00

(Authority: 38 U.S.C. 3015)

* * * * *

[FR Doc. 99–14916 Filed 6–11–99; 8:45 am]

BILLING CODE 8320–01–P

ENVIRONMENTAL PROTECTION AGENCY

40 CFR Parts 9 and 63

[FRL–6345–3]

RIN 2060–AE75

National Emission Standards for Hazardous Air Pollutants for Source Categories; Wool Fiberglass Manufacturing

AGENCY: Environmental Protection Agency (EPA).

ACTION: Final rule.

SUMMARY: This action promulgates national emission standards for hazardous air pollutants (NESHAP) for new and existing sources in wool fiberglass manufacturing facilities. This action also adds Method 316 and Method 318 for the measurement of formaldehyde from wool fiberglass manufacturing lines to appendix A of part 63.

The hazardous air pollutants (HAPs) emitted by the facilities covered by this rule include compounds of three metals (arsenic, chromium, lead) and three organic HAPs (formaldehyde, phenol, and methanol). Exposure to these HAPs can cause reversible or irreversible health effects including carcinogenic, respiratory, nervous system, developmental, reproductive, and/or dermal health effects. The EPA estimates the final rule will reduce nationwide emissions of HAPs from these facilities by 530 megagrams per year (Mg/yr) (580 tons per year [ton/yr]), an approximate 30 percent reduction from the current level of emissions. In addition, the rule will achieve an estimated 760 Mg/yr (840 ton/yr) of particulate matter (PM) reductions.

These standards implement section 112(d) of the Clean Air Act (CAA) and are based on the Administrator's determination that wool fiberglass manufacturing facilities may reasonably be anticipated to emit several of the 188 HAPs listed in section 112(b) of the CAA from the various process operations found within the industry. The final rule will provide protection to the public by requiring all wool

fiberglass plants that are major sources to meet emission standards reflecting the application of the maximum achievable control technology (MACT).

In compliance with the Paperwork Reduction Act (PRA), this action also amends the table that lists the Office of Management and Budget (OMB) control numbers issued under the PRA for this rule.

A supplement to the proposed rule was proposed in the **Federal Register** on February 12, 1999 (64 FR 7149). The EPA will give careful consideration to all comments on the supplemental proposal and will amend this final rule in a future action as appropriate.

EFFECTIVE DATE: June 14, 1999. See the **SUPPLEMENTARY INFORMATION** section concerning judicial review.

ADDRESSES: *Docket.* The docket for this rulemaking containing the information considered by the EPA in development of the final rule is Docket No. A–95–24. This docket is available for public inspection between 8 a.m. and 5:30 p.m., Monday through Friday except for Federal holidays, at the following address: U.S. Environmental Protection Agency, Air and Radiation Docket and Information Center (6102), 401 M Street SW., Washington, DC 20460; telephone: (202) 260–7548. The docket is located at the above address in Room M–1500, Waterside Mall (ground floor). A reasonable fee may be charged for copying docket materials.

FOR FURTHER INFORMATION CONTACT: Ms. Mary Johnson, at (919) 541–5025, Minerals and Inorganic Chemicals Group, Emission Standards Division (MD–13), U.S. Environmental Protection Agency, Research Triangle Park, North Carolina 27711. For information regarding Methods 316 and 318, contact Ms. Rima N. Dishakjian, Emissions, Monitoring, and Analysis Division, at (919) 541–0443.

SUPPLEMENTARY INFORMATION:

Regulated Entities. Entities potentially regulated by the final rule are facilities that manufacture wool fiberglass. Regulated categories and entities are shown in Table 1.

TABLE 1.—REGULATED CATEGORIES AND ENTITIES

Entity category	Description
Industrial Federal Government: Not Affected. State/Local/Tribal Government: Not Affected.	Wool Fiberglass Manufacturing Plants (SIC 3296).

This table is not intended to be exhaustive, but rather provides a guide for readers regarding entities likely to be regulated by this action. This table lists the types of entities that the EPA is now aware could potentially be regulated by this action. To determine whether your facility is regulated by this action, you should carefully examine the applicability criteria in § 63.1380 of the final rule. If you have any questions regarding the applicability of this action to a particular entity, consult the appropriate regional representative:

Region I—Janet Bowen, Office of Ecosystem Protection, U.S. EPA, Region I, CAP, JFK Federal Building, Boston, MA 02203, (617) 565–3595.

Region II—Kenneth Eng, Air Compliance Branch Chief, U.S. EPA, Region II, 290 Broadway, New York, NY 10007–1866, (212) 637–4000.

Region III—Bernard Turlinski, Air Enforcement Branch Chief, U.S. EPA, Region III, 3AT10, 841 Chestnut Building, Philadelphia, PA 19107, (215) 566–2110.

Region IV—Lee Page, Air Enforcement Branch, U.S. EPA, Region IV, Atlanta Federal Center, 61 Forsyth Street, Atlanta, GA 30303–3104, (404) 562–9131.

Region V—George T. Czerniak, Jr., Air Enforcement Branch Chief, U.S. EPA, Region V, 5AE–26, 77 West Jackson Street, Chicago, IL 60604, (312) 353–2088.

Region VI—John R. Hepola, Air Enforcement Branch Chief, U.S. EPA, Region VI, 1445 Ross Avenue, Suite 1200, Dallas, TX 75202–2733, (214) 665–7220.

Region VII—Donald Toensing, Chief, Air Permitting and Compliance Branch, U.S. EPA, Region VII, 726 Minnesota Avenue, Kansas City, KS 66101, (913) 551–7446.

Region VIII—Douglas M. Skie, Air and Technical Operations Branch Chief, U.S. EPA, Region VIII, 999 18th Street, Suite 500, Denver, CO 80202–2466, (303) 312–6432.

Region IX—Barbara Gross, Air Compliance Branch Chief, U.S. EPA, Region IX, 75 Hawthorne Street, San Francisco, CA 94105, (415) 744–1138.

Region X—Anita Frankel, Air and Radiation Branch Chief, U.S. EPA, Region X, AT–092, 1200 Sixth Avenue, Seattle, WA 98101, (206) 553–1757.

Judicial Review. The NESHAP for wool fiberglass manufacturing plants was proposed on March 31, 1997 (62 FR 15228); this action announces the EPA's final decisions on the rule. Under section 307(b)(1) of the CAA, judicial review of the NESHAP is available only by filing a petition for review in the U.S. Court of Appeals for the District of Columbia Circuit within 60 days of today's publication of this final rule. Under section 307(b)(2) of the CAA, the requirements that are the subject of today's notice may not be challenged later in civil or criminal proceedings brought by the EPA to enforce these requirements.

Technology Transfer Network. In addition to being available in the docket, an electronic copy of today's document, which includes the regulatory text, is available through the Technology Transfer Network (TTN) at the Unified Air Toxics Website (UATW). Following promulgation, a copy of the rule will be posted at the TTN's policy and guidance page for newly proposed or promulgated rules (http://www.epa.gov/ttn/oarpg/t3pfpr.html). The TTN facilitates the exchange of information in various areas of air pollution control, such as technology. If more information on the TTN is needed, call the TTN HELP line at (919) 541–5384.

Outline. The following outline is provided to aid in reading this preamble to the final rule.

I. Background
  A. Background and Purpose of Standards
  B. Technical Basis of Regulation
  C. Stakeholder and Public Participation
II. Summary of Final Rule
  A. Applicability
  B. Emission Standards
  C. Compliance and Performance Test Provisions
  D. Monitoring and Operating Requirements
  E. Notification, Reporting, and Recordkeeping Requirements
III. Summary of Changes Since Proposal
  A. Definitions
  B. Performance Test Provisions
  C. Monitoring Requirements
  D. Notification, Reporting, and Recordkeeping Requirements
  E. Display of OMB Control Numbers
IV. Summary of Impacts
V. Summary of Responses to Major Comments
  A. Selection of Pollutants

B. Selection of Emission Limits
C. Monitoring
D. Performance Tests
VI. Administrative Requirements
A. Docket
B. Executive Order 12866—Regulatory Planning and Review
C. Executive Order 12875—Enhancing the Intergovernmental Partnership
D. Unfunded Mandates Reform Act
E. Regulatory Flexibility
F. Submission to Congress and the General Accounting Office
G. Paperwork Reduction Act
H. Pollution Prevention Act
I. National Technology Transfer and Advancement Act
J. Executive Order 13045—Protection of Children from Environmental Health Risks and Safety Risks
K. Executive Order 13084—Consultation and Coordination With Indian Tribal Governments

I. Background

A. Background and Purpose of Standards

Section 112 of the CAA requires that the EPA promulgate regulations for the control of HAP emissions from both new and existing major sources. The statute requires the regulations to reflect the maximum degree of reduction in emissions of HAPs that is achievable, taking into consideration the cost of achieving the emission reduction, any nonair quality health and environmental impacts, and energy requirements. This level of control is commonly referred to as MACT.

Section 112 of the CAA requires the EPA to establish national standards to reduce air emissions from major sources and certain area sources that emit one or more HAPs. Section 112(b) contains a list of HAPs to be regulated by NESHAP. Section 112(c) directs the Agency to use this pollutant list to develop and publish a list of source categories for which NESHAP will be developed and a schedule for development of these NESHAP. The Agency must list all known source categories and subcategories of ''major sources'' that emit one or more of the listed HAPs. A major source is defined in section 112(a) as any stationary source or group of stationary sources located within a contiguous area and under common control that emits or has the potential to emit in the aggregate, considering controls, 10 tons per year or more of any one HAP or 25 tons per year or more of any combination of HAPs. This list of source categories was published in the **Federal Register** on July 16, 1992 (57 FR 31576) and includes wool fiberglass manufacturing.

The control of HAPs is achieved through the promulgation of technology-based emission standards under section 112 for categories of sources that emit HAPs. Emission reductions may be accomplished through the application of measures, processes, methods, systems, or techniques including, but not limited to: (1) Reducing the volume of, or eliminating emissions of, such pollutants through process changes, substitution of materials, or other modifications; (2) enclosing systems or processes to eliminate emissions; (3) collecting, capturing, or treating such pollutants when released from a process, stack, storage or fugitive emissions point; (4) design, equipment, work practice, or operational standards (including requirements for operator training or certification) as provided in subsection (h); or (5) a combination of the above. (See section 112(d)(2).) The EPA may promulgate more stringent regulations to address residual risk that remains after the imposition of controls. (See section 112(f)(2).) Pursuant to section 112(d) of the CAA, on March 31, 1997, the EPA proposed NESHAP for new and existing major sources in the wool fiberglass manufacturing source category (62 FR 15228).

B. Technical Basis of Regulation

Since proposal, no changes have been made in the emission standards or the MACT floor that is the basis for the emission standards. The rationale for the selection of the standards, including their technical basis, is discussed in the preamble to the proposed rule (62 FR 15228, March 31, 1997).

C. Stakeholder and Public Participation

Various stakeholders were involved in the development of these standards. Individual wool fiberglass companies and the industry association (the North American Insulation Manufacturers Association) were consulted throughout the development of these standards. Representatives from State and Regional enforcement agencies, as well as representatives from other offices within the EPA, participated in the regulatory development process by reviewing and commenting on the standards during development.

The NESHAP for wool fiberglass manufacturing (40 CFR part 63, subpart NNN) was proposed in the **Federal Register** on March 31, 1997 (62 FR 15228). The public comment period ended on May 30, 1997. Industry representatives, regulatory authorities, and environmental groups had the opportunity to comment on the proposed standard and to provide additional information during the public comment period. Although the Agency offered at proposal the opportunity for oral presentation of data, views, or arguments concerning the proposed rule, no one requested a hearing and a hearing was not held. The EPA received nine letters containing comments on the proposed standard from various groups including associations representing industry, regulatory agencies, and air pollution control equipment vendors, as well as from State regulatory agencies and a private citizen. This final rule reflects the EPA's full consideration of the comments. The major public comments, along with the EPA's responses to the comments on the proposed rule, are summarized in this preamble. A more detailed discussion of public comments and EPA's responses is contained in the docket (Docket No. A–95–24; Item V–C–2).

II. Summary of Final Rule

A. Applicability

As stated in § 63.1380, the final NESHAP applies to each of the following existing and newly constructed sources located at a wool fiberglass manufacturing facility: All glass-melting furnaces, rotary spin (RS) manufacturing lines that produce bonded building insulation, and flame attenuation (FA) manufacturing lines producing bonded pipe insulation. The rule also applies to new FA manufacturing lines producing bonded heavy-density products. RS and FA manufacturing lines that produce nonbonded products, where no binder is applied, are not subject to the standards. A facility emitting less than 10 tons per year of any HAP or less than 25 tons per year of any combination of HAPs is an area source and is not subject to this NESHAP. Facilities that manufacture mineral wool from rock or slag are not subject to this rule but are subject to a separate NESHAP for mineral wool production. (See 62 FR 25370 (May 8, 1997), notice of proposed rulemaking.)

B. Emission Standards

No changes were made to the emission limits as proposed. The emission standards are contained in the final rule in § 63.1382.

C. Compliance and Performance Test Provisions

As stated in § 63.1387, new sources must demonstrate compliance with the standard at startup. Existing sources must comply within 3 years of the effective date of the final rule but may request an extension for a fourth year pursuant to the regulatory authority under section 112(i)(3)(B) of the CAA.

As required by § 63.1384, owners or operators must, by conducting a performance test, demonstrate initial compliance with the PM emission limits for affected glass-melting furnaces and the formaldehyde emission limits for affected RS and FA manufacturing lines. During the initial performance test, the owner or operator must monitor and record the glass pull rate of the furnace and the glass pull rate of each manufacturing line during each of the three test runs and determine the emission rate for each run. A determination of compliance will be based on the average of the three individual test runs.

In § 63.1384, the owner or operator is required to monitor and record all parameter values at least every 15 minutes during the performance test and to calculate an average using all of the parameter measurements. However, the standard requires that the appropriate parameters for incinerators and scrubbers be continuously monitored and recorded.

The owner or operator of an electrostatic precipitator (ESP) that is used to control PM emissions from a glass-melting furnace must monitor and record the ESP operating parameter(s) and establish the parameter limit(s) that will be used to monitor the ESP performance following the performance test. Where a cold top electric furnace is operated without the use of an add-on PM control device, the owner or operator must monitor and record the air temperature above the surface of the glass melt to ensure that the maximum temperature does not exceed 120 °C (250 °F) at a location 46 to 61 centimeters (18 to 24 inches) above the molten glass surface. The owner or operator of a glass-melting furnace that is not equipped with an add-on PM control device and that is not a cold top electric furnace must monitor and record the furnace operating parameter(s) and establish the parameter limit(s) that will be used to monitor the furnace performance following the performance test.

To determine compliance with the emission limits for new and existing RS and FA manufacturing lines subject to the standard, the owner or operator must measure formaldehyde emissions to the atmosphere from forming and, when present, curing and cooling processes, and sum the emissions from these processes. The owner or operator must, according to § 63.1384, conduct the initial performance test for each new or existing RS manufacturing line while making the building insulation product with the highest loss on ignition (LOI) expected to be produced on that manufacturing line. Initial performance tests are required for new FA manufacturing lines producing heavy-density products and on new and existing FA manufacturing lines producing pipe products. Performance tests for each affected FA manufacturing line must be conducted while producing the highest LOI heavy-density or pipe product, as appropriate.

During performance tests on affected RS and FA manufacturing lines, the owner or operator must record, as specified in § 63.1384, the LOI and density of each product for each line tested, the free formaldehyde content of the resin(s) used during the tests, and the binder formulation(s) used during the tests. The performance tests must be conducted using the resin having the highest free formaldehyde content that the owner or operator expects to use on that line. If the owner or operator uses process modifications to comply with the emission limits for affected RS or FA manufacturing lines, the owner or operator must monitor and record the process parameter(s) and establish the process parameter limit(s) that will be used to monitor the performance of the process modifications following the performance tests. If a wet scrubbing control device is used to control formaldehyde emissions from affected RS or FA manufacturing lines, the owner or operator must continuously monitor and record the scrubber parameters and establish the operating limits of the pressure drop across each scrubber, the scrubbing liquid flow rate to each scrubber, and the identity and feed rate of any chemical additive. Where a thermal incinerator is used to comply with the emission limit for formaldehyde, the owner or operator is required to continuously measure and record the incinerator operating temperature during the performance test and determine the average temperature during each 1-hour test run. The average of the three test runs will be used to monitor compliance.

Under § 63.1384, the owner or operator may seek to broaden or extend the operating limits established during the performance tests for affected control devices and processes by conducting additional performance tests to demonstrate compliance at the new limits.

Under § 63.1384, the owner or operator of RS and FA manufacturing lines may conduct short-term experimental production runs without conducting additional performance tests. The final rule requires the owner or operator to notify the Administrator at least 15 days in advance of an experimental production run. The experimental runs must not exceed 1 week in duration unless a longer period is approved by the Administrator. The owner or operator may conduct the experimental production run unless notified of a decision to disapprove the run or unless notified of a request for additional information prior to the date of the run.

D. Monitoring and Operating Requirements

Owners or operators of affected sources must submit, under § 63.1383, an operations, maintenance, and monitoring plan as part of their application for a part 70 permit. The plan must include procedures for the proper operation and maintenance of processes and control devices used to comply with the emission limits as well as the corrective actions to be taken when control devices or process parameters deviate from allowable levels established during performance testing. The plan also must identify the procedures for the proper operation and maintenance of monitoring devices including periodic calibration and verification of accuracy.

Section 63.1383 requires that each baghouse used on a glass-melting furnace be equipped with a bag leak detection system having an audible alarm that automatically sounds when an increase in particulate emissions above a predetermined level is detected. Such a device monitors the performance of the baghouse, detects an increase in PM emissions, and indicates that maintenance of the baghouse is needed. The operating limits of § 63.1382 require the owner or operator to initiate corrective action within 1 hour of the alarm sounding according to the operations, maintenance, and monitoring plan. If the alarm is activated for more than 5 percent of the total operating time during the 6-month block reporting period, the owner or operator must develop and implement a Quality Improvement Plan (QIP). The QIP must be consistent with the compliance assurance monitoring rule, 40 CFR part 64 subpart D (62 FR 54900, October 22, 1997).

The monitoring requirements of § 63.1383 require the owner or operator of each ESP used to control an affected glass-melting furnace to monitor and record the established ESP parameter(s) according to the procedures in the operations, maintenance, and monitoring plan. The final rule requires the owner or operator to initiate corrective action within 1 hour, according to the procedures in the facility's operations, maintenance, and monitoring plan, if the monitored

parameter(s) deviates from the limit(s) established during performance tests. If the monitored parameter(s) is outside the established limit(s) for more than 5 percent of the total operating time in a 6-month block reporting period, the owner or operator must develop and implement a QIP. The owner or operator must operate the ESP such that the monitored parameter(s) does not deviate from the established limit(s) for more than 10 percent of the total operating time in a 6-month block reporting period.

Under § 63.1383 of the final rule, the owner or operator of a cold top electric furnace, who complies with the PM emission limit without the use of an air pollution control device, must monitor and record the air temperature above the glass melt to monitor when the temperature exceeds the maximum temperature of 120 °C (250 °F) measured at a location 46 to 61 centimeters (18 to 24 inches) above the molten glass surface. The owner or operator must initiate corrective action within 1 hour according to § 63.1382 if the average air temperature exceeds the maximum. If the air temperature as measured above the molten glass exceeds the maximum for more than 5 percent of the total operating time in a 6-month block reporting period, the owner or operator is required to develop and implement a QIP. The rule also requires that the owner or operator operate the cold top electric furnace so that the maximum temperature is not exceeded for more than 10 percent of the total operating time in a 6-month block reporting period.

The final rule (§ 63.1383) requires the owner or operator of a glass-melting furnace, which is not equipped with an air pollution control device for PM control and which is not a cold top electric furnace, to monitor the glass-melting furnace according to the procedures in the operation, maintenance, and monitoring plan. The plan must include the furnace operating parameter(s) and parameter limit(s) to be monitored to identify any operational problems, a monitoring schedule, and recordkeeping procedures. As required by § 63.1382, the owner or operator must initiate corrective action within 1 hour if the monitored operating parameter(s) deviates from the limits established during the initial performance. The rule also requires the owner or operator to develop and implement a QIP if the monitored furnace operating parameter value(s) is outside the established limit(s) for more than 5 percent of the total operating time in a 6-month block reporting period. The owner or operator must operate the affected glass-melting furnace so that the monitored furnace parameter value(s) is not outside the established limit(s) for more than 10 percent of the total operating time in a 6-month block reporting period.

The final rule, under § 63.1383, requires the owner or operator to monitor and record the glass pull rate on all existing and new glass-melting furnaces. If the monitored pull rate exceeds by more than 20 percent the average glass pull rate measured during the performance test, the owner or operator must initiate corrective action within 1 hour as required by § 63.1383. If the glass pull rate exceeds (by more than 20 percent) the average established during the performance test for more than 5 percent of the total operating time in a 6-month block reporting period, the owner or operator must develop and implement a QIP. The final rule requires the owner or operator to operate the glass-melting furnace so that the glass pull rate does not exceed (by more than 20 percent) the average established during the performance test for more than 10 percent of the total operating time in a 6-month block reporting period.

If an incinerator is used to control formaldehyde emissions, § 63.1383 requires that the owner or operator continuously monitor and record the operating temperature. Following the initial performance test, the operating limits of § 63.1382 require that the owner or operator maintain the temperature so that the temperature, averaged over any 3-hour block period, does not fall below the average temperature established during the initial performance test. As required in § 63.1383, the owner or operator must also annually inspect each incinerator to ensure its proper operation and maintenance. The rule specifies that, at a minimum, the following be included in the inspection:

(1) Burners, pilot assemblies, and pilot sensing devices;
(2) Adjustment of combustion air;
(3) Internal structures, such as baffles;
(4) Dampers, fans, and blowers;
(5) Proper sealing;
(6) Motors;
(7) Refractory lining; and (8) Incinerator shell.

Section 63.1383 of the final rule requires that the owner or operator, who uses a wet scrubbing control device to control formaldehyde emissions from affected RS or FA manufacturing lines, continuously monitor and record the gas pressure drop across each scrubber, the scrubbing liquid flow rate to each scrubber, and the identity and feed rate of any chemical added to the scrubbing liquid. As required in § 63.1382, the owner or operator must initiate corrective action according to the procedures in the facility's operations, maintenance, and monitoring plan within 1 hour if the average scrubber parameter for any 3-hour block period deviates from the limit(s) established during the initial performance test. If any scrubber parameter is outside an established limit(s) for more than 5 percent of the total operating time in a 6-month block reporting period, the owner or operator must develop and implement a QIP. The owner or operator must operate each affected scrubber such that none of the monitored parameters deviate from the established limits for more than 10 percent of the total operating time in a 6-month block reporting period.

As required in § 63.1383, the owner or operator who uses process modifications to comply with the emission limits for RS or FA manufacturing lines must establish a correlation between the parameter(s) to be monitored and formaldehyde emissions. The owner or operator must also include as part of the operations, maintenance, and monitoring plan information on how the process will be operated and maintained, the process parameter(s) to be monitored including the correlation between the parameter(s) and formaldehyde emissions, a monitoring schedule, and recordkeeping procedures to document proper operation of the process modifications. Section 63.1382 of the final rule requires the owner or operator to initiate corrective action within 1 hour of a deviation of a process parameter from the established limits and to develop and implement a QIP if the process parameter(s) is outside the established limit(s) for more than 5 percent of the total operating time in a 6-month block reporting period. The owner or operator must operate the process so that the process modification parameters do not deviate from the established limits for more than 10 percent of the total operating time in a 6-month block reporting period.

Under § 63.1383 of the final rule, the owner or operator must monitor and record the free formaldehyde content of each resin shipment, the formulation of each batch of binder used, and, every 8 hours, product LOI and product density. Following the performance test, § 63.1382 requires that the owner or operator must formulate binders using resins having a free formaldehyde content that does not exceed the free formaldehyde content range contained in the resin specification established and used during the performance test.

The final rule also requires that the owner or operator use a binder formulation that does not vary from the specification and operating range established during the performance test. For purposes of this rule, the addition of urea and lignin to the binder formulation is not considered changes in the formulation.

Failure to operate all affected processes and control devices according to the operating limits of § 63.1382, for example, failure to initiate corrective actions or failure to develop and implement a QIP, is considered a violation of the operating requirements.

Under § 63.1383 of this rule, the owner or operator may modify any of the control device or process parameter limits established during the initial performance tests provided that the owner or operator conducts additional emission testing to verify compliance at the new parameter levels.

E. Notification, Reporting, and Recordkeeping Requirements

Notification, reporting, and recordkeeping requirements for MACT standards are included in the NESHAP general provisions (40 CFR part 63, subpart A). The general provisions require: (1) Initial notification(s) of applicability, notification of performance test, and notification of compliance status; (2) a report of performance test results; (3) a startup, shutdown, and malfunction plan with semiannual reports of any reportable events; and (4) semiannual reports of deviations from established parameters. When deviations in operating parameters established during performance testing are reported, the owner or operator must report quarterly until a request to return to semiannual reporting is approved by the Administrator.

In addition to the requirements of the general provisions, § 63.1386 of the final rule specifies additional records to be kept by the owner or operator. The final rule requires the owner or operator to maintain records of the following, as applicable:

(1) Bag leak detection system alarms, including the date and time of the alarm, when corrective actions were initiated, the cause of the alarm, an explanation of the corrective actions taken, and when the cause of the alarm was corrected;

(2) ESP parameter value(s) used to monitor ESP performance, including any period when the value(s) deviates from the established limit(s), the date and time of the deviation, when corrective actions were initiated, the cause of the deviation, an explanation of the corrective actions taken, and when the cause of the deviation was corrected;

(3) Air temperature above the molten glass in an uncontrolled cold top electric furnace, including any period when the temperature exceeds 120 °C (250 °F) at a location 46 to 61 centimeters (18 to 24 inches) above the molten glass surface, the date and time of the exceedance, when corrective actions were initiated, the cause of the exceedance, an explanation of the corrective actions taken, and when the cause of the exceedance was corrected;

(4) Uncontrolled glass-melting furnace (that is not a cold top electric furnace) parameter value(s) used to monitor furnace performance, including any period when the value(s) exceeds the established limit(s), the date and time of the exceedance, when corrective actions were initiated, the cause of the exceedance, an explanation of the corrective actions taken, and when the cause of the exceedance was corrected;

(5) The LOI and product density for each bonded product manufactured on a RS or FA manufacturing line, the free formaldehyde content of each resin shipment received and used in binder formulation, and the binder formulation of each batch;

(6) Process parameter level(s) for RS and FA manufacturing lines that use process modifications to comply with the emission standards, including any period when the parameter level(s) deviates from the established limit(s), the date and time of the deviation, when corrective actions were initiated, the cause of the deviation, an explanation of the corrective actions taken, and when the cause of the deviation was corrected;

(7) Scrubber pressure drop, scrubbing liquid flow rate, and any chemical additive (including chemical feed rate to the scrubber), including any period when a parameter level(s) deviates from the established limit(s), the date and time of the deviation, when corrective actions were initiated, the cause of the deviation, an explanation of the corrective actions taken, and when the cause of the deviation was corrected;

(8) Incinerator operating temperature and results of periodic inspection of incinerator components, including any period when the temperature falls below the established average or the inspection identifies problems with the incinerator, the date and time of the problem, when corrective actions were initiated, the cause of the problem, an explanation of the corrective actions taken, and when the cause of the problem was corrected;

(9) Glass pull rate, including any period when the pull rate exceeds the average pull rate established during the performance test by more than 20 percent, the date and time of the exceedance, when corrective actions were initiated, the cause of the exceedance, an explanation of the corrective actions taken, and when the cause of the exceedance was corrected.

The NESHAP general provisions (40 CFR part 63, subpart A) require that records be maintained for at least 5 years from the date of each record. The owner or operator must retain the records onsite for at least 2 years but may retain the records offsite the remaining 3 years. The files may be retained on microfilm, on microfiche, on a computer, on computer disks, or on magnetic tape disks. Reports may be made on paper or on a labeled computer disk using commonly available and EPA-compatible computer software.

III. Summary of Changes Since Proposal

Changes have been incorporated into the final NESHAP for wool fiberglass manufacturing plants in response to comments on the proposed rule. The principal changes made since proposal are summarized below. Additional discussion of changes and the rationale for these changes is presented in section V of this preamble.

A. Definitions

In response to public comments, minor clarifying changes were made in § 63.1381 to the definitions of *building insulation, glass pull rate, manufacturing line,* and *wool fiberglass.* For purposes of clarifying the applicability of the rule and because of changes in the monitoring requirements for certain glass-melting furnaces, definitions were added for *cold top electric furnace, new source, and wool fiberglass manufacturing facility.*

B. Performance Test Provisions

In response to public comments, the EPA revised the proposed provision that would allow the owner or operator of RS and FA manufacturing lines subject to the NESHAP to conduct short-term experimental production runs without conducting additional performance tests. Section 63.1384 of the final rule requires that the owner or operator notify the Administrator at least 15 days in advance of an experimental production run. The duration of the test run may not exceed 1 week unless the Administrator approves a longer period. The Administrator may disapprove the experimental production run or request additional information but such disapproval or request for additional information must be made prior to the date of the experimental production run.

Other revisions clarify the proposed requirements for performance testing by specifying the frequency for monitoring and recording process and/or control device parameters during performance tests. The requirements to establish process and control device parameter limits for compliance monitoring are more appropriately a part of the requirements for performance testing and, thus, were moved from the monitoring requirements section to the performance test requirements section. The requirement for RS manufacturing lines to use the most frequently manufactured building insulation when conducting performance tests was deleted from the proposed definition of *building insulation.* A requirement was added to the performance testing provisions (§ 63.1384) for affected RS and FA manufacturing lines to conduct performance test while manufacturing the product having the highest LOI expected to be produced on the affected line. Because a glass-melting furnace may supply more than one manufacturing line, the final rule clarifies that, in addition to the furnace glass pull rate, the glass pull rate for the manufacturing line must also be monitored during the performance test.

Methods for measuring formaldehyde emissions from RS and FA manufacturing lines were contained in the proposed rule. Because the Agency now has an FTIR method (Method 320) that can be used at other sources, a self-validating method is no longer necessary. Method 318 was modified by removing the spiking procedures, which simplifies use of the method. The EPA has also clarified that this method is only applicable at mineral wool and wool fiberglass manufacturing sources. In response to comments, the final rule also contains editorial and clarifying changes in Method 318.

C. Monitoring Requirements

The monitoring requirements section in the proposed rule specified, for each control device and process, the parameter that was to be monitored. In the final rule, the section on monitoring requirements was revised. In the final rule, the monitoring requirements section (§ 63.1383) specifies that process or control device parameters must be monitored as well as monitoring frequency. The final rule recognizes that a deviation of a process or control device parameter from a level established during a performance test is more appropriately a violation of an operating limit rather than a violation of an emission limit. The operating limits are part of the standard and are specified in § 63.1382.

The proposed rule stated that the owner or operator of each affected source had to submit an operations, maintenance, and monitoring plan containing information on the proper operation and maintenance of process modifications and control devices, the parameter(s) to be monitored that would be used to determine compliance, and corrective actions to be taken when monitoring indicated a deviation from the limit(s) established during the performance tests. The final rule (§ 63.1383) clarifies that the operations, maintenance, and monitoring plan must also include procedures for the proper operation and maintenance of all monitoring devices. As proposed, each baghouse used on a glass-melting furnace must be equipped with a bag leak detection system having an audible alarm that automatically sounds when an increase in particulate emissions above a predetermined level is detected. In response to comments and for consistency with other regulations, § 63.1383 of the final standard requires that the monitor be capable of detecting PM emissions at concentrations of 10 milligrams per actual cubic meter (0.0044 grains per actual cubic foot). Also, because guidelines for the operation and maintenance of triboelectric bag leak detection systems have become available since proposal, these guidelines are specifically cited in the rule. The EPA's ''Fabric Filter Bag Leak Detection Guidance'' (EPA–454/R–98–015, September 1997) is available on the TTN under Emission Measurement Center (EMC), Continuous Emission Monitoring. To maintain consistency with bag leak detection system requirements in other regulations and to allow owners and operators flexibility to make necessary bag leak detection system adjustments, the final rule specifies that following initial adjustment, the owner or operator may adjust the range, averaging period, alarm set points, or alarm delay time as specified in the approved operations, maintenance, and monitoring plan. The final rule further specifies that in no event may the range be increased by more than 100 percent or decreased by more than 50 percent over a 365 day period unless a responsible official, as defined in § 63.2 of the general provisions in subpart A of 40 CFR part 63, certifies in writing to the Administrator that the fabric filter has been inspected and found to be in good operating condition. The final rule clarifies that the alarm must be located in an area where appropriate plant personnel will be able to hear it and that in response to the sounding of an alarm, the owner or operator must complete corrective actions in a timely manner. The final rule also specifies some example corrective actions for bag leak detection system alarms that may be included in the operations, maintenance, and monitoring plan.

Under the proposed rule, the owner or operator would continuously monitor and record the glass pull rate on all existing and new glass-melting furnaces. As a result of comments, § 63.1383 of the final rule clarifies what is meant by continuous monitoring of the glass pull rate. Similar revisions were made to the monitoring requirements for other control devices and process parameters to clarify the requirements for monitoring frequency. Revisions were made to the proposed rule to clarify when corrective actions are required in response to monitored levels that are outside the limits established during performance tests.

Under the proposed NESHAP, the owner or operator would be in violation of the standard if the binder formulation deviated from the formulation specifications used during the performance test. In response to comments, the final rule states that the addition of urea and lignin to the binder formulation does not constitute a change in binder formulation, and the operating limits in § 63.1382 for the binder formulation and the use of resins were clarified to incorporate this change.

In response to comments, clarifying changes were made throughout the monitoring and operating requirements to indicate that because some control device or process parameters used for monitoring purposes may be established as minimum and/or maximum values, it is not always appropriate to have requirements that are in terms of exceeding control device or process parameter values. Other minor editorial changes were made throughout the monitoring and operating requirements to improve clarity.

Consistent with the general provision requirements to operate and maintain air pollution equipment in a manner consistent with good air pollution control practices, the final rule contains specific provisions for the annual inspection of incinerators to ensure that they maintain their performance in reducing formaldehyde emissions.

The proposed rule allowed the owner or operator of a glass-melting furnace that complies with the PM emission limit without the use of add-on control devices to determine the appropriate process parameter or control device parameter to monitor to determine compliance. Section 63.1383 of the final

rule specifies that the owner or operator of a cold top electric furnace is required to monitor the air temperature above the molten glass surface. Section 63.1382 requires the owner or operator of a cold top electric furnace to operate the furnace such that the air temperature above the molten glass does not exceed 120 °C (250 °F) more than 10 percent of total operating time in a 6-month block reporting period.

D. Notification, Reporting, and Recordkeeping Requirements

The proposed rule specified additional records to be kept by the owner or operator in addition to the requirements of the general provisions. Editorial and clarifying revisions were made to the final notification, reporting, and recordkeeping requirements (§ 63.1386). The final rule specifies that the time that corrective action is initiated, as well as when the cause of the alarm, deviation, or exceedance was corrected, must be recorded. In addition, product density and glass pull rate were added to the list for which records are required to be kept, consistent with the monitoring provisions in § 63.1383. Other revisions were made to the recordkeeping provisions consistent with changes made in the monitoring and operating provisions.

E. Display of OMB Control Numbers

The EPA is today amending the table of currently approved information collection request (ICR) control numbers issued by OMB for various regulations. Today's amendment updates the table to list the information requirements contained in this final rule. The EPA will continue to present OMB control numbers in a consolidated table format to be codified in 40 CFR part 9 of the Agency's regulations, and in each CFR volume containing EPA regulations. The table lists the section numbers with reporting and recordkeeping requirements, and the current OMB control numbers. This listing of the OMB control numbers and its subsequent codification in the CFR satisfy the requirements of the Paperwork Reduction Act (PRA) (44 U.S.C. 3501 *et seq.*) and OMB's implementing regulations at 5 CFR part 1320.

The ICR was previously subject to public notice and comment prior to OMB approval. As a result, EPA finds there is ''good cause'' under section 553(b)(B) of the Administrative Procedure Act (5 U.S.C. 553(b)(B)) to amend this table without prior notice and comment. Due to the technical nature of the table, further notice and comment would be unnecessary.

IV. Summary of Impacts

The impacts estimated to be attributable to the final rule are the same as those estimated to be attributable to the proposed rule (62 FR 15228, March 31, 1997). Nationwide emissions of formaldehyde from existing RS and FA manufacturing lines are estimated to be 1,770 Mg/yr (1,950 ton/yr) at the current level of control. Implementation of the final rule will reduce nationwide formaldehyde emissions from existing sources by 410 Mg/yr (450 ton/yr). Emission reductions from RS manufacturing lines producing building insulation constitute the entire reduction; there are no emission reductions from FA manufacturing lines. Reduction in formaldehyde emissions from new RS manufacturing lines is estimated to be 120 Mg/yr (130 ton/yr) in the fifth year of the standard. Total reductions in formaldehyde emissions from both existing and new RS manufacturing lines, therefore will be 530 Mg/yr (580 ton/yr). Nationwide PM emissions from existing glass-melting furnaces at the current level of control, are about 750 Mg/yr (830 ton/yr). Under this rule, PM emissions from existing furnaces will be reduced by about 600 Mg/yr (660 ton/yr), of which 40 Mg/yr (50 ton/yr) is particulate matter less than 10 microns (μm) in diameter (PM–10). The PM emission reduction from new glass-melting furnaces resulting from this rule is estimated to be 160 Mg/yr (180 ton/yr) in the fifth year of the standard. Under the final rule, PM emissions from existing and new furnaces will be reduced by a total of 760 Mg/yr (840 ton/yr). Current nationwide emissions of metal HAPs from existing furnaces is 270 kg/yr (600 lb/yr). Under the final rule, metal HAP emissions from existing furnaces and new furnaces will be reduced by 9 kg/yr (20 lb/yr) and 2 kg/yr (5 lb/yr), respectively.

The EPA expects no water or solid waste impacts from the final rule. Because this standard is based on the use of baghouses, dry ESP's, thermal incinerators, and process modifications, there are no water pollution impacts. One existing RS manufacturing line uses scrubbers to control HAP emissions from forming. This rule will not affect the water pollution impact of the scrubbers. No additional sources are expected to add wet scrubbers for the control of HAP emissions. The PM captured by the baghouses added to existing uncontrolled electric furnaces will be recycled back to the furnace and no solid or hazardous waste is generated by the use of thermal incinerators. The EPA estimates that the rule will have a minor impact on energy consumption.

The total nationwide capital cost for existing glass-melting furnaces under the final rule is $3.2 million; the total annual cost is $1.5 million. These costs result from the expected addition of baghouses to seven electric glass-melting furnaces as well as the monitoring costs of bag leak detection systems installed on baghouses and temperature monitors installed on cold top electric furnaces.

The EPA estimates the nationwide capital costs of upgrading process modifications on 30 RS manufacturing lines to be $16.3 million, with annual costs of $4.8 million. None of the existing curing ovens that are uncontrolled for HAPs will have to add an incinerator. None of the FA manufacturing lines subject to the rule will require additional controls to comply with the emission standards. Therefore, no control costs are associated with complying with the final rule for FA manufacturing lines. For all RS and FA manufacturing lines subject to the standard, there is a one-time cost of $15,000 per line to establish the process parameter values for compliance monitoring. Because the parameters that the owner or operator is required to monitor on RS and FA manufacturing lines are currently monitored by the industry, no additional costs will be incurred for monitoring beyond the one-time cost of $15,000 per line.

Total nationwide capital cost for the standard is estimated to be $19.5 million and annual nationwide cost is estimated to be $6.3 million/yr, including installation, operation, and maintenance of emission control and monitoring systems.

The economic analysis of the rule finds impacts at the facility and market-level to be modest. The average market price increases for both structural and nonstructural wool fiberglass are expected to be less than 0.5 percent. The resultant decreases in quantity demanded range from 0.17 percent for structural insulation markets to 0.22 percent for nonstructural insulation markets. None of the affected firms are classified as small businesses and no closures are predicted.

V. Summary of Responses to Major Comments

The EPA received nine comment letters on the proposed NESHAP for wool fiberglass manufacturing. A copy of each comment letter is available for public inspection in the docket for the rulemaking (Docket No. A–95–24; see

the **ADDRESSES** section of this preamble for information on inspecting the docket). The EPA has had follow-up discussions with commenters regarding specific issues initially raised in their written comments. Copies of correspondence and other information exchanged between the EPA and the commenters during the post-comment period are available for public inspection in the docket for the rulemaking.

All comments received by EPA were reviewed and carefully considered by the Agency. The EPA made changes to the rule where appropriate. A summary of responses to major comments received on the proposed rule is presented below. Additional discussion of the EPA's responses to public comments is presented in the document ''Summary of Public Comments and Responses on Wool Fiberglass Manufacturing NESHAP'' (Docket A–95–24, Item V–C–2).

A. Selection of Pollutants

Comment: Two commenters stated that the issues of fine mineral fibers as HAP and the health effects of wool fiberglass particles greater than 1 micron in diameter should be addressed. One commenter stated that because the definition of fine mineral fibers is under review in response to new data on health effects and respirability, the EPA should address in the final preamble the possibility of a new definition for fine mineral fibers and its effects on the NESHAP.

Response: The rule does not include emission limits for fine mineral fibers at wool fiberglass manufacturing facilities because EPA determined that the affected sources do not emit ''fine mineral fibers,'' as presently defined by the CAA. Fiberglass emissions from the affected manufacturing lines at wool fiberglass manufacturing facilities consist of clumps of fibers that are much larger than 10 micrometers in diameter. The CAA, by contrast, defines ''fine mineral fibers'' to include mineral fiber emissions from facilities manufacturing or processing glass, rock, or slag fibers (or other mineral derived fibers) of average diameter 1 micrometer or less. (See section 112(b)(1)n.3.)

B. Selection of Emission Limits

Comment: One commenter stated that the EPA determined the MACT floor for glass-melting furnaces inappropriately by establishing equipment standards as the MACT floor rather than a straightforward determination of numerical MACT floors as specified in section 112(d)(3) of the CAA. Such an approach, according to the commenter, has allowed the EPA to use emissions data from the worst performing units to set emission limits that are no more stringent than the nearly 20-year-old NSPS for glass-melting furnaces. The commenter believes that new baghouses and precipitators, and low-cost upgrades of existing ones, would allow much more stringent emission limits. The commenter stated that the EPA should base the MACT floors on the numerical emissions of the best performing 12 percent for existing sources and the best performing source for new sources and revise the emission limits to be consistent with the more stringent floors.

Response: In determining the MACT floor, the EPA is not limited merely to examining emissions test data from the best performing sources and calculating the numeric mean of such sources' emission rates, because the test data may not translate directly to truly achievable standards. Rather, the Agency has taken alternative approaches to establishing MACT floors in the past, depending on the type, quality, and applicability of available emissions information. (See 62 FR 49051, 49060 (September 18, 1997) (describing various alternatives)).

Among the standard options the EPA may follow is to establish the floor in consideration of the emissions control technology used by the best performing sources. Specifically, the Agency could establish the new source MACT floor based on the technology employed by the best-controlled similar source and the existing source MACT floor based on the technology used by the average of the best-performing 12 percent of sources (or, in the case of categories with fewer than 30 sources, the average of the best-performing five sources). The EPA would then calculate a numeric MACT emission limit that is achievable in practice by sources employing that technology, in view of process and air pollution control device variability.

The EPA followed this technology-driven approach in the present rulemaking. Available emissions information indicates that both baghouses and ESP's are equally effective in controlling PM emissions from glass-melting furnaces, and that the best performing sources in the wool fiberglass source category employ such technology. Accordingly, the Agency determined that either of these technologies, when well-designed and well-operated, would form the basis of the MACT floor for controlling emissions from glass-melting furnaces in this source category. The EPA then sought, consistent with the CAA, to express the MACT floor in terms of a numeric emissions limit. To do so, it evaluated existing test data from wool fiberglass facilities controlling glass-melting furnace emissions with baghouses and ESP's. Because the measured emission rates varied, even though each of the sources had well-operated and maintained air pollution control equipment, the Agency concluded that the measured rates were indicative of equipment and process variability. The EPA therefore established the MACT floor at an emission level achievable by the best performing technology, after accounting for normal operating variability.

The Agency's approach in this rulemaking to determine the applicable MACT floors is consistent with the CAA. The CAA requires a standard that is ''achievable'' (42 U.S.C. 112(d)(2) (''Emission standards * * * shall require the maximum degree of reductions in emissions * * * that the Administrator * * * determines is achievable * * * '')). However, the commenter's insistence on setting the MACT floor based solely on a numeric average would require the Agency to establish a standard that, in light of normal and unavoidable control equipment and process variability, would not be achievable consistently by the best performing sources in the category. The EPA's method in the present rulemaking, by contrast, heeds Congress's attention to achievability and is a prudent exercise of the discretion the CAA grants the Agency ''to use its best engineering judgment in collecting and analyzing the (available emissions) data, and in assessing the data's comprehensiveness, accuracy, and *variability*, in order to determine which sources achieve the best emission reductions.'' (59 FR 29196, 29199 (June 6, 1994)) (emphasis added). See also *National Lime Association* v. *E.P.A.*, 627 F.2d 416, 431 n. 46 (D.C. Cir. 1980) (''to be achievable, we think a uniform standard must be capable of being met under most adverse conditions which can reasonably be expected to recur'').

Comment: Two commenters stated that the EPA is not limited to setting emission limits at the MACT floors and thermal and catalytic incinerators could provide cost-effective 98 to 99 percent emission reductions on RS forming, curing, and cooling and FA forming and curing. According to one commenter, the emission limits for flame attenuation manufacturing lines are much too high; more appropriate formaldehyde emission limits are 0.068–0.078 lb/ton. Another commenter stated that emissions as low as 0.02 kg/Mg for RS manufacturing, 0.13 kg/Mg for heavy-density flame attenuation

manufacturing, and 0.11 kg/Mg for pipe flame attenuation manufacturing could be achieved if catalytic oxidation were used to control forming, curing, and cooling processes. According to one commenter, the EPA should also consider other creative control technology applications, for example, ducting multiple sources, such as forming and curing, to a single control unit at a much lower cost than separate controls on individual process units while achieving 98–99 percent reduction in forming and curing oven emissions. One commenter also stated that the EPA has ignored the use of carbon-and zeolite-based concentrators, which can reduce exhaust volumes thereby reducing the size and cost of required control devices. According to this commenter, such concentrators can reduce exhaust volumes to be treated at least tenfold and sometimes much greater allowing the use of small control devices after forming and curing. Alternatively, the concentrated exhaust could be ducted to the curing oven or curing oven control device, thus allowing for low-cost control of emissions from the entire wool fiberglass manufacturing line.

Response: Even though incineration is demonstrated on rotary spin curing ovens and is the MACT floor for new and existing rotary spin curing ovens, incineration is not demonstrated for rotary spin forming or for flame attenuation forming or flame attenuation curing. Further, concentrators are not demonstrated in this industry for any process. Although not demonstrated, the EPA considered the beyond-the-floor control option of incineration for both rotary spin forming and flame attenuation forming and curing processes. According to an analysis of the cost effectiveness of beyond-the-floor controls for RS manufacturing lines, the cost effectiveness of controlling formaldehyde emissions from forming using incineration is $183,000 per ton of formaldehyde reduction. On FA manufacturing lines producing heavy-density products, the cost effectiveness of controlling formaldehyde emissions using incineration is $1.95 million per ton of formaldehyde reduction for forming processes and $13.5 million per ton of formaldehyde reduction for curing processes. On FA manufacturing lines producing pipe products, the cost effectiveness of controlling formaldehyde emissions using incineration is $2.7 million per ton of formaldehyde reduction for forming processes and $42.3 million per ton of formaldehyde reduction for curing processes. At this time, the EPA considers that the cost effectiveness of these beyond-the-floor controls are not reasonable. Therefore, the EPA rejected beyond-the-floor controls and set emission standards at the MACT floor level.

Comment: A commenter stated that, in light of formaldehyde classification as a Class B1, probable human carcinogen, the EPA should reconsider its use of the largest emission rates as the emission limits for the flame attenuation lines producing pipe products and heavy-density products. According to one commenter, the emission limits for flame attenuation manufacturing lines are much too high with more appropriate formaldehyde emission limits being 0.068–0.078 lb/ton. Another commenter stated that emissions as low as 0.13 kg/Mg for heavy-density flame attenuation manufacturing, and 0.11 kg/Mg for pipe flame attenuation manufacturing could be achieved if catalytic oxidation were used to control forming, curing, and cooling processes.

Response: In establishing emission limits for affected FA manufacturing lines, the EPA followed the approach used for glass-melting furnaces. Process modifications constitute the pollution control technology used by the best performing sources, and each of the facilities currently producing pipe insulation and heavy density products employ an identical level of process modifications on their FA manufacturing lines. Nevertheless, the measured emission rates of formaldehyde from these sources varied. Because the same degree of pollution control had different emission rates, the Agency concluded that operational variability accounted for the differences and factored such variability into the promulgated emission standard by setting the MACT floor at a level achievable in practice by sources using the identified technology.

Comment: Because the EPA is allowing averaging of emissions across the various units making up the manufacturing line, one commenter stated that this tends to increase emissions above those associated with emission limits on separate process units and that EPA should set emission limits more stringent than the sum of the floor limits rather than allow averaging.

Response: In setting emission limits for rotary spin and flame attenuation manufacturing lines, the EPA used available emissions data for each process unit (forming, curing, and cooling for rotary spin lines, and forming and curing for flame attenuation lines) to determine the appropriate MACT floor for each process unit in the line. The Agency then summed emissions from the MACT floors to create a resultant line-based MACT floor emission limit. Therefore, the EPA disagrees that these ''line'' limits are less stringent than the limits that would have been established for individual process units if the source subject to MACT had been defined more narrowly. For instance, because the MACT floor for cooling on rotary spin lines and for curing on flame attenuation lines is no control, the EPA may not have set emission limits for these sources if limits were set on a unit-by-unit basis. Thus, potentially higher emissions would have been allowed than are currently being allowed under this rule.

C. Monitoring

Comment: Several comments were received concerning the use of bag leak detectors for monitoring baghouses used to control emissions from glass-melting furnaces. One commenter stated that because the industry standard for sensitivity of bag leak detectors is 0.0005 gr/dscf, the sensitivity cited in the rule should be changed from 0.0004 gr/dscf to 0.0005 gr/dscf.

According to another commenter, the requirements to install and operate bag leak detectors according to EPA guidance (§ 63.1384(b)(5)) will be difficult to enforce. The commenter further stated that if EPA wants the guidance to be followed, it should be contained in a rule; if not, it should be in the preamble as recommended practice.

Another commenter asked if a source would be in violation of the standard if the alarm on the bag leak detector is activated more than 10 percent of the total operating time during a 6-month block reporting period.

Response: After reviewing technical data from a supplier of dust detection equipment and reviewing other EPA standards that require bag leak detectors for consistency, EPA has modified the required sensitivity level to ''0.0044 gr/dscf or less.'' This change does not alter the intended function of the bag leak detector, and is consistent with the industry standard for sensitivity and other EPA standards.

Although EPA understands, as the one commenter indicated, that enforcement may be more difficult, there are currently no performance specifications available for bag leak detectors. EPA guidance on the use of triboelectric bag leak detectors has been developed and is cited in the rule along with information on its availability.

In the proposed and final rules, the source would not be in violation of the standard if the alarm on the bag leak detector is activated more than 10 percent of the total operating time during a 6-month block reporting period. The EPA issued a supplemental proposal (64 FR 7149, February 12, 1999) for wool fiberglass and other source categories which, along with other compliance issues, deals with the question as to the existence of a violation when the bag leak detector alarm is activated and how it is enforced. The EPA will consider all comments on the supplemental proposal and will amend this final rule in a future action as appropriate.

Comment: For clarity with State agencies, one commenter recommended that the requirement in § 63.1386(e) to ''continuously monitor and record'' as it applies to glass pull rate be defined to mean to install, operate and maintain pull rate monitoring and recording equipment per the written operations, maintenance, and monitoring plan.

Response: Based on additional information provided by the commenter, EPA learned that the commenter would like the rule to clarify the monitoring and recording frequency associated with continuous monitors for glass pull rate. According to the commenter, the process is very steady and there is not a need for minute-by-minute monitoring and recordkeeping. EPA has revised the rule to require that on existing glass-melting furnaces with continuous monitors and on all new glass-melting furnaces, the glass pull rate must be monitored and recorded on an hourly basis and every 4 hours an average is to be calculated for purposes of determining compliance. At any time that a 4-hour average pull rate exceeds the average pull rate established during the performance test by greater than 20 percent, corrective action must be initiated within 1 hour. If a 20 percent or more exceedance of the pull rate occurs for more than 5 percent of the total operating time in the 6-month block reporting period, a QIP is required. The final rule requires the owner operate the glass-melting furnace so that the glass pull rate does not exceed, by more than 20 percent, the established maximum glass pull rate for more than 10 percent of the total operating time in the 6-month block reporting period.

As a result of this comment, the EPA examined the other monitoring provisions and made similar clarifying changes throughout the monitoring section as they pertain to monitoring frequency and averaging period.

D. Performance Tests

Comment: One commenter recommended revisions to the monitoring requirements of § 63.1386(g)(2) to clarify that if changes are made in the binder formulation that would not result in an increase in HAP emissions, such as the use of resin extenders, additional emissions testing is not required. The commenter explained that binder formulations are developed and controlled centrally by technical experts at each company and are not subject to modification at each plant. According to this commenter, normal practice is for any new binder formulation to be supported by additional emission tests. For reasons of material availability and cost reduction, the commenter explained that the binder formulation specification allows some flexibility for substituting resin extenders. During subsequent discussions with the commenter, it was explained that extenders replace components of the binder and that urea and lignin are used as extenders and replace some of the formaldehyde and phenol in the binder. The extenders act to dilute the binder and because the rate of application of the extended binder does not change, the emissions of formaldehyde and phenol are decreased.

Response: Based on this comment as well as additional information supplied by the commenter on the use of extenders and their effects on formaldehyde emissions, the EPA has revised the rule to permit the addition of the extenders urea and lignin in the binder formulations without the need to perform additional emission testing.

During discussions to obtain additional information from the commenter on this issue, the commenter was also concerned that the occasional switching of resin suppliers where the resins are made to the same specifications, may be interpreted by enforcement agencies as a change in resin and require additional emissions testing. The EPA does not intend for additional emission testing to be performed where a facility switches resin suppliers as long as the resin from the new supplier is made to the same product specifications as that used during the performance test.

VI. Administrative Requirements

A. Docket

The docket is intended to be an organized file of the administrative records compiled by EPA. The docket is a dynamic file because information is added throughout the rulemaking development. The docketing system is intended to allow members of the public and industries involved to readily identify and locate documents so that they can effectively participate in the rulemaking process. Along with the proposed and promulgated standards and their preambles, the docket will contain the record in case of judicial review. (See section 307(d)(7)(A) of the CAA.) The location of the official rulemaking record, including all public comments received on the proposed rule, is in the **ADDRESSES** section at the beginning of this preamble.

B. Executive Order 12866—Regulatory Planning and Review

Under Executive Order 12866 (58 FR 51735, October 4, 1993), the EPA must determine if a regulatory action is ''significant,'' and therefore subject to review by OMB and the requirements of the Executive Order. The Executive Order defines ''significant regulatory action'' as one that is likely to result in a rule that may:

(1) Have an annual effect on the economy of $100 million or more or adversely affect in a material way the economy, a sector of the economy, productivity, competition, jobs, the environment, public health or safety, or State, local, or tribal governments or communities;

(2) Create a serious inconsistency or otherwise interfere with an action taken or planned by another agency;

(3) Materially alter the budgetary impact of entitlements, grants, user fees, or loan programs, or the rights and obligation of recipients thereof; or

(4) Raise novel legal or policy issues arising out of legal mandates, the President's priorities, or the principles set forth in the Executive Order.

It has been determined that this final rule is not a ''significant regulatory action'' under the terms of the Executive Order and is therefore not subject to OMB review.

C. Executive Order 12875—Enhancing the Intergovernmental Partnership

Under Executive Order 12875, the EPA may not issue a regulation that is not required by statute and that creates a mandate upon a State, local or tribal government, unless the Federal government provides the funds necessary to pay the direct compliance costs incurred by those governments, or the EPA consults with those governments. If the EPA complies by consulting, Executive Order 12875 requires the EPA to provide to the OMB a description of the extent of the EPA's prior consultation with representatives of affected State, local and tribal governments, the nature of their concerns, copies of any written

communications from the governments, and a statement supporting the need to issue the regulation. In addition, Executive Order 12875 requires the EPA to develop an effective process permitting elected officials and other representatives of State, local and tribal governments ''to provide meaningful and timely input in the development of regulatory proposals containing significant unfunded mandates.''

Today's rule does not create a mandate on State, local or tribal governments. The rule does not impose any enforceable duties on State, local or tribal governments, because they do not own or operate any sources that would be subject to this rule. Accordingly, the requirements of section 1(a) of Executive Order 12875 do not apply to this rule.

D. Unfunded Mandates Reform Act

Title II of the Unfunded Mandates Reform Act of 1995 (UMRA), Pub. L. 104–4, establishes requirements for Federal agencies to assess the effects of their regulatory actions on State, local, and tribal governments and the private sector. Under section 202 of the UMRA, the EPA generally must prepare a written statement, including a cost-benefit analysis, for proposed and final rules with ''Federal mandates'' that may result in expenditures by State, local, and tribal governments, in the aggregate, or by the private sector, of $100 million or more in any one year. Before promulgating an EPA rule for which a written statement is needed, section 205 of the UMRA generally requires the EPA to identify and consider a reasonable number of regulatory alternatives and adopt the least costly, most cost-effective or least burdensome alternative that achieves the objectives of the rule. The provisions of section 205 do not apply when they are inconsistent with applicable law. Moreover, section 205 allows the EPA to adopt an alternative other than the least costly, most cost-effective or least burdensome alternative if the Administrator publishes with the final rule an explanation why that alternative was not adopted. Before the EPA establishes any regulatory requirements that may significantly or uniquely affect small governments, it must have developed under section 203 of the UMRA a small government agency plan. The plan must provide for notifying potentially affected small governments, enabling officials of affected small governments to have meaningful and timely input in the development of EPA regulatory proposals with significant Federal intergovernmental mandates, and informing, educating, and advising small governments on compliance with the regulatory requirements.

The EPA has determined that this rule does not contain a Federal mandate that may result in expenditures of $100 million or more for State, local, and tribal governments, in the aggregate, or the private sector in any one year. The EPA has determined that the total nationwide capital cost for the standard is approximately $19.5 million and the annual nationwide cost is approximately $6.3 million/yr. This rule is based partially on pollution prevention alternatives and on a manufacturing line approach. It is the least costly and burdensome approach for industry since the purchase of add-on control devices will be avoided by most of the industry. The only costs to State and local governments are those associated with implementing this standard through the permitting process, and these costs are recouped through permit fees. Thus, today's rule is not subject to the requirements of sections 202 and 205 of the UMRA. In addition, the EPA has determined that this rule contains no regulatory requirements that might significantly or uniquely affect small governments because it does not impose any enforceable duties on small governments; such governments own or operate no sources subject to these rules and therefore would not be required to purchase control systems to meet the requirements of the rule.

E. Regulatory Flexibility

The Regulatory Flexibility Act (RFA) generally requires an agency to conduct a regulatory flexibility analysis of any rule subject to notice and comment rulemaking requirements unless the agency certifies that the rule will not have a significant economic impact on a substantial number of small entities. Small entities include small businesses, small not-for-profit enterprises, and small governmental jurisdictions.

EPA has determined that it is not necessary to prepare a regulatory flexibility analysis in connection with this final rule. EPA has also determined that this rule will not have a significant impact on a substantial number of small entities because no company that owns sources in the source category meets the criteria for small business. The Small Business Administration defines ''small business,'' as the term applies to SIC 3296, as a firm with fewer than 750 employees. None of the firms in the industry have fewer than 750 employees and, thus, are not small businesses by this criterion.

F. Submission to Congress and the General Accounting Office

The Congressional Review Act, 5 U.S.C. 801 *et seq.*, as added by the Small Business Regulatory Enforcement Fairness Act of 1996, generally provides that before a rule may take effect, the agency promulgating the rule must submit a rule report, which includes a copy of the rule, to each House of the Congress and to the Comptroller General of the United States. EPA will submit a report containing this rule and other required information to the U.S. Senate, the U.S. House of Representatives, and the Comptroller General of the United States prior to publication of the rule in the **Federal Register**. This action is not a ''major rule'' as defined by 5 U.S.C. 804(2). This rule will be effective June 14, 1999.

G. Paperwork Reduction Act

The OMB has approved the information collection requirements contained in this rule under the provisions of the PRA, 44 U.S.C. 3501 *et seq.* and has assigned OMB control number 2060–0359.

The information collection requirements include the notification, reporting, and recordkeeping requirements of the NESHAP general provisions, authorized under section 114 of the CAA, which are mandatory for all owners or operators subject to national emission standards. All information submitted to the EPA for which a claim of confidentiality is made is safeguarded according to Agency policies in 40 CFR part 2, subpart B. This rule does not require any notifications or reports beyond those required by the general provisions. Subpart NNN does require additional records of specific information needed to determine compliance with the rule. These include records of: (1) Any bag leak detection system alarm, including the date and time, with a brief explanation of the cause of the alarm and the corrective action taken; (2) ESP parameter values, such as secondary voltage for each electrical field including any deviation outside the limits established during the performance test and a brief explanation of the cause of the deviation and the corrective action taken; (3) air temperature above the surface of the molten glass of a cold top electric furnace that does not use an add-on control device for PM emission control, including any air temperature above 120 °C (250 °F) with a brief explanation of the cause and the corrective action taken; (4) operating parameter(s) for uncontrolled glass melting furnace (that

is not a cold top electric furnace) that does not use an add-on control device for the control of PM emissions including any exceedance of the level established during the performance test and a brief explanation of the cause of the exceedance and the corrective action taken; (5) the free-formaldehyde content of the resin being used; (6) the formulation of the binder being used; (7) the product LOI and product density for each 8-hour period on a RS or FA manufacturing line subject to the NESHAP; (8) forming process modification parameter(s), including any period when the parameter level(s) deviate from the level(s) established during the performance test and a brief explanation of the cause of the deviation and the corrective action taken; (9) pressure drop, liquid flow rate, and information on chemical additives to the scrubbing liquid, including any period when there is a deviation from the levels established during the performance tests and a brief explanation of the cause and the corrective action taken; (10) incinerator operating temperature, including any 3-hour block period when the temperature falls below the level established during the performance test, and the results of the annual inspection, including any problems discovered during the inspection, with a brief explanation of the cause and, the corrective action taken; and (11) glass pull rate, including any period when the pull rate exceeds the average pull rate established during the performance test by more than 20 percent, with a brief explanation of the cause of the exceedance, the corrective action taken, and the time the corrective action was initiated. All records documenting corrective actions must include the time of the alarm, deviation, or exceedance and the time that the corrective action is initiated as well as when the cause of the alarm, deviation, or exceedance is corrected. Each of these information requirements is needed to determine compliance with the standards.

The annual public reporting and recordkeeping burden to industry for this collection is estimated at 17,100 labor hours per year at an annual cost of $548,000. This estimate includes a one-time performance test and report (with repeat tests where needed); one-time preparation of a startup, shutdown, and malfunction plan with semiannual reports of any event in which the procedures in the plan were not followed; semiannual excess emissions reports; notifications; and recordkeeping. The annualized capital cost associated with monitoring requirements is estimated at $41,000. The operation and maintenance cost is estimated at $3,000/yr.

Burden means the total time, effort, or financial resources expended by persons to generate, maintain, retain, or disclose or provide information to or for a Federal agency. This includes the time needed to review instructions; develop, acquire, install, and utilize technology and systems for the purpose of collecting, validating, and verifying information, processing and maintaining information, and disclosing and providing information; adjust the existing ways to comply with any previously applicable instructions and requirements; train personnel to be able to respond to a collection of information; search data sources; complete and review the collection of information; and transmit or otherwise disclose the information.

An Agency may not conduct or sponsor, and a person is not required to respond to, a collection of information unless it displays a currently valid OMB control number. The OMB control numbers for EPA's regulations are listed in 40 CFR part 9 and 48 CFR chapter 15. The EPA is amending the table in 40 CFR part 9 of currently approved ICR control numbers issued by OMB for various regulations to list the information requirements contained in this final rule.

H. Pollution Prevention Act

The Pollution Prevention Act of 1990 states that pollution should be prevented or reduced at the source whenever feasible. The emission standards for RS and FA manufacturing lines subject to the standard are formulated as line standards, i.e., the sum of the individual forming, curing, and cooling MACT floor emission levels for RS manufacturing lines and forming and curing MACT floor emission levels for certain FA manufacturing lines. By formulating the standard as a line standard, tradeoffs are allowed for existing facilities that will accomplish the same environmental results at lower costs and will encourage process modifications and pollution prevention alternatives. According to the industry, new RS manufacturing lines may be able to meet the line standard without the use of costly incinerators with their energy and other environmental impacts, such as increased nitrogen oxides (NO_X) and sulfur oxides (SO_X) emissions, by incorporating pollution prevention measures, such as binder reformulation and improved binder application efficiency. Pollution prevention alternatives will also increase binder utilization efficiency and reduce production costs for industry. In selecting the format of the emission standard for emissions from manufacturing lines, the EPA considered various alternatives such as setting separate emission limits for each process, i.e., forming, curing, and cooling. A line standard gives the industry greater flexibility in complying with the emission limits and is the least costly because industry can avoid the capital and annual operating and maintenance costs associated with the purchase of add-on control equipment by using pollution prevention measures.

I. National Technology Transfer and Advancement Act

Section 12(d) of the National Technology Transfer and Advancement Act (NTTAA), Pub. L. 104–113 (March 7, 1996), directs the EPA to use voluntary consensus standards in regulatory and procurement activities unless to do so would be inconsistent with applicable law or otherwise impractical. Voluntary consensus standards are technical standards (such as materials specifications, test methods, sampling procedures, and business practices) which are developed or adopted by voluntary consensus standard bodies. Where available and potentially applicable voluntary consensus standards are not used by EPA, the Act requires the Agency to provide Congress, through the OMB, an explanation for not using such standards. This section summarizes the EPA's response to the requirements of the NTTAA for the analytical test methods promulgated as part of this final rule.

Consistent with the NTTAA, the EPA conducted searches to identify voluntary consensus standards for the EPA's emissions sampling and analysis reference methods and industry recommended materials analysis procedures cited in this rule. Candidate voluntary consensus standards for materials analysis were identified for product loss on ignition (LOI), product density, and free formaldehyde content. Consensus comments provided by industry experts were that the candidate standards did not meet industry materials analysis requirements. Therefore, EPA has determined these voluntary consensus standards were impractical for the wool fiberglass manufacturing NESHAP. The EPA, in consultation with the North American Insulation Manufacturers Association (NAIMA), has formulated industry-specific materials analysis, consensus standards which are promulgated in this rule.

The EPA search to identify voluntary consensus standards for the EPA's emissions sampling and analysis reference methods cited in this rule identified 17 candidate standards that appeared to have possible use in lieu of EPA standard reference methods. However, after reviewing available standards, EPA determined that 12 of the candidate consensus standards identified for measuring emissions of the HAPs or surrogates subject to emission standards in the rule would be not be practical due to lack of equivalency, documentation, validation data and other important technical and policy considerations. Five of the remaining candidate consensus standards are new standards under development that EPA plans to follow, review and consider adopting at a later date. This rule requires standard EPA emission test methods known to the industry and States. Approved alternative methods also may be used with prior EPA approval.

J. Executive Order 13045—Protection of Children From Environmental Health Risks and Safety Risks

Executive Order 13045 (62 FR 19885, April 23, 1997) applies to any rule that(1) is determined to be ''economically significant'' as defined under Executive Order 12866, and (2) concerns the environmental health or safety risk that the EPA has reason to believe may have a disproportionate effect on children. If the regulatory action meets both criteria, the Agency must evaluate the environmental health or safety effects of the planned rule on children and explain why the planned regulation is preferable to other potentially effective and reasonably feasible alternatives considered by the Agency.

The EPA interprets Executive Order 13045 as applying only to those regulatory actions that are based on health or safety risks, such that the analysis required under section 5–501 of the Order has the potential to influence the regulation. This final rule is not subject to Executive Order 13045 because it is not an economically significant regulatory action as defined by Executive Order 12866, and it is based on technology performance and not on health or safety risks.

K. Executive Order 13084—Consultation and Coordination With Indian Tribal Governments

Under Executive Order 13084, the EPA may not issue a regulation that is not required by statue, that significantly or uniquely affects the communities of Indian tribal governments, and that imposes substantial direct compliance costs on those communities, unless the Federal government provides the funds necessary to pay the direct compliance costs incurred by the tribal governments, or the EPA consults with those governments. If the EPA complies by consulting, Executive Order 13084 requires the EPA to provide to the OMB, in a separately identified section of the preamble to the rule, a description of the extent of EPA's prior consultation with representatives of affected tribal governments, a summary of the nature of their concerns, and a statement supporting the need to issue the regulation. In addition, Executive Order 13084 requires the EPA to develop an effective process permitting elected officials and other representatives of Indian tribal governments ''to provide meaningful and timely input in the development of regulatory policies on matters that significantly or uniquely affect their communities.''

Today's rule does not significantly or uniquely affect the communities of Indian tribal governments. No wool fiberglass manufacturing facilities are owned or operated by Indian tribal governments. Accordingly, the requirements of section 3(b) of Executive Order 13084 do not apply to this rule.

List of Subjects

40 CFR Part 9

Environmental protection, Reporting and recordkeeping requirement

40 CFR Part 63

Environmental protection, Air pollution control, Hazardous substances, Reporting and recordkeeping requirements, Wool fiberglass manufacturing.

Dated: May 13, 1999.

Carol M. Browner,

Administrator.

For the reasons set out in the preamble, parts 9 and 63 of title 40, chapter I of the Code of Federal Regulations are amended as follows:

PART 9—OMB APPROVALS UNDER THE PAPERWORK REDUCTION ACT

1. The authority citation for part 9 continues to read as follows:

Authority: 7 U.S.C. 135 *et seq.*, 136–136y; 15 U.S.C. 2001, 2003, 2005, 2006, 2601–2671; 21 U.S.C. 331j, 346a, 348; 31 U.S.C. 9701; 33 U.S.C. 1251 *et. seq.*, 1311, 1313d, 1314, 1318, 1321, 1326, 1330, 1342, 1344, 1345 (d) and (e), 1361; E.O. 11735, 38 FR 21243, 3 CFR, 1971–1975 Comp. p. 973; 42 U.S.C. 241, 242b, 243, 246, 300f, 300g, 300g–1, 300g–2, 300g–3, 300g–4, 300g–5, 300g–6, 300j–1, 300j–2, 300j–3, 300j–4, 300j–9, 1857 *et seq.*, 6901–6992k, 7401–7671q, 7542, 9601–9657, 11023, 11048.

2. In § 9.1, the table is amended by adding new entries in numerical order under the indicated heading to read as follows:

§ 9.1 OMB approvals under the Paperwork Reduction Act.

* * * * *

40 CFR citation	OMB control No.
* * * * *	
National Emission Standards for Hazardous Air Pollutants for Source Categories [3]	
* * * * *	
63.1383	2060–0359
63.1386	2060–0359
63.1387	2060–0359
* * * * *	

[3] The ICRs referenced in this section of the table encompass the applicable general provisions contained in 40 CFR part 63, subpart A, which are not independent information collection requirements.

* * * * *

PART 63—NATIONAL EMISSION STANDARDS FOR HAZARDOUS AIR POLLUTANTS FOR SOURCE CATEGORIES

3. The authority citation for part 63 continues to read as follows:

Authority: 42 U.S.C. 7401 *et seq.*

4. Part 63 is amended by adding subpart NNN consisting of §§ 63.1380 through 63.1399 to read as follows:

Subpart NNN—National Emission Standards for Hazardous Air Pollutants for Wool Fiberglass Manufacturing

Sec.

63.1380 Applicability.
63.1381 Definitions.
63.1382 Emission standards.
63.1383 Monitoring requirements.
63.1384 Performance test requirements.
63.1385 Test methods and procedures.
63.1386 Notification, recordkeeping, and reporting requirements.
63.1387 Compliance dates.
63.1388—63.1399 [Reserved]

Table 1 to Subpart NNN of part 63—Applicability of general provisions (40 CFR part 63, subpart A) to subpart NNN.

Appendix A to Subpart NNN of part 63—Method for the determination of LOI

Appendix B to Subpart NNN of part 63—Free formaldehyde analysis of insulation resins by hydroxylamine hydrochloride

Appendix C to Subpart NNN of part 63—Method for the determination of product density

Subpart NNN—National Emission Standards for Hazardous Air Pollutants for Wool Fiberglass Manufacturing

§ 63.1380 Applicability.

(a) Except as provided in paragraphs (b) and (c) of this section, the requirements of this subpart apply to the owner or operator of each wool fiberglass manufacturing facility that is a major source or is located at a facility that is a major source.

(b) The requirements of this subpart apply to emissions of hazardous air pollutants (HAPs), as measured according to the methods and procedures in this subpart, emitted from the following new and existing sources at a wool fiberglass manufacturing facility subject to this subpart:

(1) Each new and existing glass-melting furnace located at a wool fiberglass manufacturing facility;

(2) Each new and existing rotary spin wool fiberglass manufacturing line producing a bonded wool fiberglass building insulation product; and

(3) Each new and existing flame attenuation wool fiberglass manufacturing line producing a bonded pipe product and each new flame attenuation wool fiberglass manufacturing line producing a bonded heavy-density product.

(c) The requirements of this subpart do not apply to a wool fiberglass manufacturing facility that the owner or operator demonstrates to the Administrator is not a major source as defined in § 63.2.

(d) The provisions of this part 63, subpart A that apply and those that do not apply to this subpart are specified in Table 1 of this subpart.

§ 63.1381 Definitions.

Terms used in this subpart are defined in the Clean Air Act, in § 63.2, or in this section as follows:

Bag leak detection system means systems that include, but are not limited to, devices using triboelectric, light scattering, and other effects to monitor relative or absolute particulate matter (PM) emissions.

Bonded means wool fiberglass to which a phenol-formaldehyde binder has been applied.

Building insulation means bonded wool fiberglass insulation, having a loss on ignition of less than 8 percent and a density of less than 32 kilograms per cubic meter (kg/m^3) (2 pounds per cubic foot [lb/ft^3]).

Cold top electric furnace means an all-electric glass-melting furnace that operates with a temperature of 120 °C (250 °F) or less as measured at a location 46 to 61 centimeters (18 to 24 inches) above the molten glass surface.

Flame attenuation means a process used to produce wool fiberglass where molten glass flows by gravity from melting furnaces, or pots, to form filaments that are drawn down and attenuated by passing in front of a high-velocity gas burner flame.

Glass-melting furnace means a unit comprising a refractory vessel in which raw materials are charged, melted at high temperature, refined, and conditioned to produce molten glass. The unit includes foundations, superstructure and retaining walls, raw material charger systems, heat exchangers, melter cooling system, exhaust system, refractory brick work, fuel supply and electrical boosting equipment, integral control systems and instrumentation, and appendages for conditioning and distributing molten glass to forming processes. The forming apparatus, including flow channels, is not considered part of the glass-melting furnace.

Glass pull rate means the mass of molten glass that is produced by a single glass-melting furnace or that is used in the manufacture of wool fiberglass at a single manufacturing line in a specified time period.

Hazardous Air Pollutant (HAP) means any air pollutant listed in or pursuant to section 112(b) of the Clean Air Act.

Heavy-density product means bonded wool fiberglass insulation manufactured on a flame attenuation manufacturing line and having a loss on ignition of 11 to 25 percent and a density of 8 to 48 kg/m^3 (0.5 to 3 lb/ft^3).

Incinerator means an enclosed air pollution control device that uses controlled flame combustion to convert combustible materials to noncombustible gases.

Loss on ignition (LOI) means the percent decrease in weight of wool fiberglass after it has been ignited. The LOI is used to monitor the weight percent of binder in wool fiberglass.

Manufacturing line means the manufacturing equipment for the production of wool fiberglass that consists of a forming section where molten glass is fiberized and a fiberglass mat is formed and which may include a curing section where binder resin in the mat is thermally set and a cooling section where the mat is cooled.

New source means any affected source the construction or reconstruction of which is commenced after March 31, 1997.

Pipe product means bonded wool fiberglass insulation manufactured on a flame attenuation manufacturing line and having a loss on ignition of 8 to 14 percent and a density of 48 to 96 kg/m^3 (3 to 6 lb/ft^3).

Rotary spin means a process used to produce wool fiberglass building insulation by forcing molten glass through numerous small orifices in the side wall of a spinner to form continuous glass fibers that are then broken into discrete lengths by high-velocity air flow. Any process used to produce bonded wool fiberglass building insulation by a process other than flame attenuation is considered rotary spin.

Wool fiberglass means insulation materials composed of glass fibers made from glass produced or melted at the same facility where the manufacturing line is located.

Wool fiberglass manufacturing facility means any facility manufacturing wool fiberglass on a rotary spin manufacturing line or on a flame attenuation manufacturing line.

§ 63.1382 Emission standards

(a) *Emission limits*—(1) *Glass-melting furnaces.* On and after the date the initial performance test is completed or required to be completed under § 63.7 of this part, whichever date is earlier, the owner or operator shall not discharge or cause to be discharged into the atmosphere in excess of 0.25 kilogram (kg) of particulate matter (PM) per megagram (Mg) (0.5 pound [lb] of PM per ton) of glass pulled for each new or existing glass-melting furnace.

(2) *Rotary spin manufacturing lines.* On and after the date the initial performance test is completed or required to be completed under § 63.7 of this part, whichever date is earlier, the owner or operator shall not discharge or cause to be discharged into the atmosphere in excess of:

(i) 0.6 kg of formaldehyde per megagram (1.2 lb of formaldehyde per ton) of glass pulled for each existing rotary spin manufacturing line; and

(ii) 0.4 kg of formaldehyde per megagram (0.8 lb of formaldehyde per ton) of glass pulled for each new rotary spin manufacturing line.

(3) *Flame attenuation manufacturing lines.* On and after the date the initial performance test is completed or required to be completed under § 63.7 of this part, whichever date is earlier, the owner or operator shall not discharge or cause to be discharged into the atmosphere in excess of:

(i) 3.9 kg of formaldehyde per megagram (7.8 lb of formaldehyde per ton) of glass pulled for each new flame attenuation manufacturing line that produces heavy-density wool fiberglass; and

(ii) 3.4 kg of formaldehyde per megagram (6.8 lb of formaldehyde per ton) of glass pulled from each existing

or new flame attenuation manufacturing line that produces pipe product wool fiberglass.

(b) *Operating limits.* On and after the date on which the performance test required to be conducted by §§ 63.7 and 63.1384 is completed, the owner or operator must operate all affected control equipment and processes according to the following requirements.

(1)(i) The owner or operator must initiate corrective action within 1 hour of an alarm from a bag leak detection system and complete corrective actions in a timely manner according to the procedures in the operations, maintenance, and monitoring plan.

(ii) The owner or operator must implement a Quality Improvement Plan (QIP) consistent with the compliance assurance monitoring provisions of 40 CFR part 64, subpart D when the bag leak detection system alarm is sounded for more than 5 percent of the total operating time in a 6-month block reporting period.

(2)(i) The owner or operator must initiate corrective action within 1 hour when any 3-hour block average of the monitored electrostatic precipitator (ESP) parameter is outside the limit(s) established during the performance test as specified in § 63.1384 and complete corrective actions in a timely manner according to the procedures in the operations, maintenance, and monitoring plan.

(ii) The owner or operator must implement a QIP consistent with the compliance assurance monitoring provisions of 40 CFR part 64 subpart D when the monitored ESP parameter is outside the limit(s) established during the performance test as specified in § 63.1384 for more than 5 percent of the total operating time in a 6-month block reporting period.

(iii) The owner or operator must operate the ESP such that the monitored ESP parameter is not outside the limit(s) established during the performance test as specified in § 63.1384 for more than 10 percent of the total operating time in a 6-month block reporting period.

(3)(i) The owner or operator must initiate corrective action within 1 hour when any 3-hour block average temperature of a cold top electric furnace as measured at a location 46 to 61 centimeters (18 to 24 inches) above the molten glass surface, exceeds 120 °C (250 °F) and complete corrective actions in a timely manner according to the procedures in the operations, maintenance, and monitoring plan.

(ii) The owner or operator of a cold top electric furnace must implement a QIP consistent with the compliance assurance monitoring provisions of 40 CFR part 64, subpart D when the temperature, as measured at a location 46 to 61 centimeters (18 to 24 inches) above the molten glass surface, exceeds 120 °C (250 °F) for more than 5 percent of the total operating time in a 6-month block reporting period.

(iii) The owner or operator must operate the cold top electric furnace such that the temperature does not exceed 120 °C (250 °F) as measured at a location 46 to 61 centimeters (18 to 24 inches) above the molten glass surface, for more than 10 percent of the total operating time in a 6-month reporting period.

(4)(i) The owner or operator must initiate corrective action within 1 hour when any 3-hour block average value for the monitored parameter(s) for a glass-melting furnace, which uses no add-on controls and which is not a cold top electric furnace, is outside the limit(s) established during the performance test as specified in § 63.1384 and complete corrective actions in a timely manner according to the procedures in the operations, maintenance, and monitoring plan.

(ii) The owner or operator must implement a QIP consistent with the compliance assurance monitoring provisions of 40 CFR Part 64 subpart D when the monitored parameter(s) is outside the limit(s) established during the performance test as specified in § 63.1384 for more than 5 percent of the total operating time in a 6-month block reporting period.

(iii) The owner or operator must operate a glass-melting furnace, which uses no add-on controls and which is not a cold top electric furnace, such that the monitored parameter(s) is not outside the limit(s) established during the performance test as specified in § 63.1384 for more than 10 percent of the total operating time in a 6-month block reporting period.

(5)(i) The owner or operator must initiate corrective action within 1 hour when the average glass pull rate of any 4-hour block period for glass melting furnaces equipped with continuous glass pull rate monitors, or daily glass pull rate for glass melting furnaces not so equipped, exceeds the average glass pull rate established during the performance test as specified in § 63.1384, by greater than 20 percent and complete corrective actions in a timely manner according to the procedures in the operations, maintenance, and monitoring plan.

(ii) The owner or operator must implement a QIP consistent with the compliance assurance monitoring provisions of 40 CFR part 64, subpart D when the glass pull rate exceeds, by more than 20 percent, the average glass pull rate established during the performance test as specified in § 63.1384 for more than 5 percent of the total operating time in a 6-month block reporting period.

(iii) The owner or operator must operate each glass-melting furnace such that the glass pull rate does not exceed, by more than 20 percent, the average glass pull rate established during the performance test as specified in § 63.1384 for more than 10 percent of the total operating time in a 6-month block reporting period.

(6) The owner or operator must operate each incinerator used to control formaldehyde emissions from forming or curing such that any 3-hour block average temperature in the firebox does not fall below the average established during the performance test as specified in § 63.1384.

(7)(i) The owner or operator must initiate corrective action within 1 hour when the average pressure drop, liquid flow rate, or chemical feed rate for any 3-hour block period is outside the limits established during the performance tests as specified in § 63.1384 for each wet scrubbing control device and complete corrective actions in a timely manner according to the procedures in the operations, maintenance, and monitoring plan.

(ii) The owner or operator must implement a QIP consistent with the compliance assurance monitoring provisions of 40 CFR part 64, subpart D when any scrubber parameter is outside the limit(s) established during the performance test as specified in § 63.1384 for more than 5 percent of the total operating time in a 6-month block reporting period.

(iii) The owner or operator must operate each scrubber such that each monitored parameter is not outside the limit(s) established during the performance test as specified in § 63.1384 for more than 10 percent of the total operating time in a 6-month block reporting period.

(8)(i) The owner or operator must initiate corrective action within 1 hour when the monitored process parameter level(s) is outside the limit(s) established during the performance test as specified in § 63.1384 for the process modification(s) used to control formaldehyde emissions and complete corrective actions in a timely manner according to the procedures in the operations, maintenance, and monitoring plan.

(ii) The owner or operator must implement a QIP consistent with the compliance assurance monitoring provisions of 40 CFR part 64, subpart D

when the process parameter(s) is outside the limit(s) established during the performance test as specified in § 63.1384 for more than 5 percent of the total operating time in a 6-month block reporting period.

(iii) The owner or operator must operate the process modifications such that the monitored process parameter(s) is not outside the limit(s) established during the performance test as specified in § 63.1384 for more than 10 percent of the total operating time in a 6-month block reporting period.

(9) The owner or operator must use a resin in the formulation of binder such that the free-formaldehyde content of the resin used does not exceed the free-formaldehyde range contained in the specification for the resin used during the performance test as specified in § 63.1384.

(10) The owner or operator must use a binder formulation that does not vary from the specification and operating range established and used during the performance test as specified in § 63.1384. For the purposes of this standard, adding or increasing the quantity of urea and/or lignin in the binder formulation does not constitute a change in the binder formulation.

§ 63.1383 Monitoring requirements.

On and after the date on which the performance test required to be conducted by §§ 63.7 and 63.1384 is completed, the owner or operator must monitor all affected control equipment and processes according to the following requirements.

(a) The owner or operator of each wool fiberglass manufacturing facility must prepare for each glass-melting furnace, rotary spin manufacturing line, and flame attenuation manufacturing line subject to the provisions of this subpart, a written operations, maintenance, and monitoring plan. The plan must be submitted to the Administrator for review and approval as part of the application for a part 70 permit. The plan must include the following information:

(1) Procedures for the proper operation and maintenance of process modifications and add-on control devices used to meet the emission limits in § 63.1382;

(2) Procedures for the proper operation and maintenance of monitoring devices used to determine compliance, including quarterly calibration and certification of accuracy of each monitoring device according to the manufacturers's instructions; and

(3) Corrective actions to be taken when process parameters or add-on control device parameters deviate from the limit(s) established during initial performance tests.

(b)(1) Where a baghouse is used to control PM emissions from a glass-melting furnace, the owner or operator shall install, calibrate, maintain, and continuously operate a bag leak detection system.

(i) The bag leak detection system must be certified by the manufacturer to be capable of detecting PM emissions at concentrations of 10 milligrams per actual cubic meter (0.0044 grains per actual cubic foot) or less.

(ii) The bag leak detection system sensor must produce output of relative PM emissions.

(iii) The bag leak detection system must be equipped with an alarm system that will sound automatically when an increase in relative PM emissions over a preset level is detected and the alarm must be located such that it can be heard by the appropriate plant personnel.

(iv) For positive pressure fabric filter systems, a bag leak detection system must be installed in each baghouse compartment or cell. If a negative pressure or induced air baghouse is used, the bag leak detection system must be installed downstream of the baghouse. Where multiple bag leak detection systems are required (for either type of baghouse), the system instrumentation and alarm may be shared among the monitors.

(v) A triboelectric bag leak detection system shall be installed, operated, adjusted, and maintained in a manner consistent with the U.S. Environmental Protection Agency guidance, ''Fabric Filter Bag Leak Detection Guidance'' (EPA–454/R–98–015, September 1997). Other bag leak detection systems shall be installed, operated, adjusted, and maintained in a manner consistent with the manufacturer's written specifications and recommendations.

(vi) Initial adjustment of the system shall, at a minimum, consist of establishing the baseline output by adjusting the range and the averaging period of the device and establishing the alarm set points and the alarm delay time.

(vii) Following the initial adjustment, the owner or operator shall not adjust the range, averaging period, alarm setpoints, or alarm delay time except as detailed in the approved operations, maintenance, and monitoring plan required under paragraph (a) of this section. In no event shall the range be increased by more than 100 percent or decreased more than 50 percent over a 365-day period unless a responsible official as defined in § 63.2 of the general provisions in subpart A of this part certifies that the baghouse has been inspected and found to be in good operating condition.

(2) The operations, maintenance, and monitoring plan required by paragraph (a) of this section must specify corrective actions to be followed in the event of a bag leak detection system alarm. Example corrective actions that may be included in the plan include the following:

(i) Inspecting the baghouse for air leaks, torn or broken bags or filter media, or any other conditions that may cause an increase in emissions.

(ii) Sealing off defective bags or filter media.

(iii) Replacing defective bags or filter media, or otherwise repairing the control device.

(iv) Sealing off a defective baghouse compartment.

(v) Cleaning the bag leak detection system probe, or otherwise repairing the bag leak detection system.

(vi) Shutting down the process producing the particulate emissions.

(c)(1) Where an ESP is used to control PM emissions from a glass-melting furnace, the owner or operator must monitor the ESP according to the procedures in the operations, maintenance, and monitoring plan.

(2)The operations, maintenance, and monitoring plan for the ESP must contain the following information:

(i) The ESP operating parameter(s), such as secondary voltage of each electrical field, to be monitored and the minimum and/or maximum value(s) that will be used to identify any operational problems;

(ii) A schedule for monitoring the ESP operating parameter(s);

(iii) Recordkeeping procedures, consistent with the recordkeeping requirements of § 63.1386, to show that the ESP operating parameter(s) is within the limit(s) established during the performance test; and

(iv) Procedures for the proper operation and maintenance of the ESP.

(d) The owner or operator must measure and record at least once per shift the temperature 46 to 61 centimeters (18 to 24 inches) above the surface of the molten glass in a cold top electric furnace that does not use any add-on controls to control PM emissions.

(e)(1) Where a glass-melting furnace is operated without an add-on control device to control PM emissions, the owner or operator must monitor the glass-melting furnace according to the procedures in the operations, maintenance, and monitoring plan.

(2) The operations, maintenance, and monitoring plan for the glass-melting

furnace must contain the following information:

(i) The operating parameter(s) to be monitored and the minimum and/or maximum value(s) that will be used to identify any operational problems;

(ii) A schedule for monitoring the operating parameter(s) of the glass-melting furnace;

(iii) Recordkeeping procedures, consistent with the recordkeeping requirements of § 63.1386, to show that the glass-melting furnace parameter(s) is within the limit(s) established during the performance test; and

(iv) Procedures for the proper operation and maintenance of the glass-melting furnace.

(f)(1) The owner or operator of an existing glass-melting furnace equipped with continuous glass pull rate monitors must monitor and record the glass pull rate on an hourly basis. For glass-melting furnaces that are not equipped with continuous glass pull rate monitors, the glass pull rate must be monitored and recorded once per day.

(2) On any new glass-melting furnace, the owner or operator must install, calibrate, and maintain a continuous glass pull rate monitor that monitors and records on an hourly basis the glass pull rate.

(g)(1) The owner or operator who uses an incinerator to control formaldehyde emissions from forming or curing shall install, calibrate, maintain, and operate a monitoring device that continuously measures and records the operating temperature in the firebox of each incinerator.

(2) The owner or operator must inspect each incinerator at least once per year according to the procedures in the operations, maintenance, and monitoring plan. At a minimum, an inspection must include the following:

(i) Inspect all burners, pilot assemblies, and pilot sensing devices for proper operation and clean pilot sensor, as necessary;

(ii) Ensure proper adjustment of combustion air and adjust, as necessary;

(iii) Inspect, when possible, internal structures, for example, baffles, to ensure structural integrity per the design specifications;

(iv) Inspect dampers, fans, and blowers for proper operation;

(v) Inspect for proper sealing;

(vi) Inspect motors for proper operation;

(vii) Inspect combustion chamber refractory lining and clean and repair/replace lining, as necessary;

(viii) Inspect incinerator shell for corrosion and/or hot spots;

(ix) For the burn cycle that follows the inspection, document that the incinerator is operating properly and make any necessary adjustments; and

(x) Generally observe that the equipment is maintained in good operating condition.

(xi) Complete all necessary repairs as soon as practicable.

(h) The owner or operator who uses a wet scrubbing control device to control formaldehyde emissions must install, calibrate, maintain, and operate monitoring devices that continuously monitor and record the gas pressure drop across each scrubber and scrubbing liquid flow rate to each scrubber according to the procedures in the operations, maintenance, and monitoring plan. The pressure drop monitor is to be certified by its manufacturer to be accurate within ±250 pascals (±1 inch water gauge) over its operating range, and the flow rate monitor is to be certified by its manufacturer to be accurate within ±5 percent over its operating range. The owner or operator must also continuously monitor and record the feed rate of any chemical(s) added to the scrubbing liquid.

(i)(1) The owner or operator who uses process modifications to control formaldehyde emissions must establish a correlation between formaldehyde emissions and a process parameter(s) to be monitored.

(2) The owner or operator must monitor the established parameter(s) according to the procedures in the operations, maintenance, and monitoring plan.

(3)The owner or operator must include as part of their operations, maintenance, and monitoring plan the following information:

(i) Procedures for the proper operation and maintenance of the process;

(ii) Process parameter(s) to be monitored to demonstrate compliance with the applicable emission limits in § 63.1382. Examples of process parameters include LOI, binder solids content, and binder application rate;

(iii) Correlation(s) between process parameter(s) to be monitored and formaldehyde emissions;

(iv) A schedule for monitoring the process parameter(s); and

(v) Recordkeeping procedures, consistent with the recordkeeping requirements of § 63.1386, to show that the process parameter value(s) established during the performance test is not exceeded.

(j) The owner or operator must monitor and record the free-formaldehyde content of each resin shipment received and used in the formulation of binder.

(k) The owner or operator must monitor and record the formulation of each batch of binder used.

(l) The owner or operator must monitor and record at least once every 8 hours, the product LOI and product density of each bonded wool fiberglass product manufactured.

(m) For all control device and process operating parameters measured during the initial performance tests, the owners or operators of glass-melting furnaces, rotary spin manufacturing lines or flame attenuation manufacturing lines subject to this subpart may change the limits established during the initial performance tests if additional performance testing is conducted to verify that, at the new control device or process parameter levels, they comply with the applicable emission limits in § 63.1382. The owner or operator shall conduct all additional performance tests according to the procedures in this part 63, subpart A and in § 63.1384.

§ 63.1384 Performance test requirements.

(a) The owner or operator subject to the provisions of this subpart shall conduct a performance test to demonstrate compliance with the applicable emission limits in § 63.1382. Compliance is demonstrated when the emission rate of the pollutant is equal to or less than each of the applicable emission limits in § 63.1382. The owner or operator shall conduct the performance test according to the procedures in 40 CFR part 63, subpart A and in this section.

(1) All monitoring systems and equipment must be installed, operational, and calibrated prior to the performance test.

(2) Unless a different frequency is specified in this section, the owner or operator must monitor and record process and/or add-on control device parameters at least every 15 minutes during the performance tests. The arithmetic average for each parameter must be calculated using all of the recorded measurements for the parameter.

(3) During each performance test, the owner or operator must monitor and record the glass pull rate for each glass-melting furnace and, if different, the glass pull rate for each rotary spin manufacturing line and flame attenuation manufacturing line. Record the glass pull rate every 15 minutes during any performance test required by this subpart and determine the arithmetic average of the recorded measurements for each test run and calculate the average of the three test runs.

(4) The owner or operator shall conduct a performance test for each existing and new glass-melting furnace.

(5) During the performance test, the owner or operator of a glass-melting furnace controlled by an ESP shall monitor and record the ESP parameter level(s), as specified in the operations, maintenance, and monitoring plan, and establish the minimum and/or maximum value(s) that will be used to demonstrate compliance after the initial performance test.

(6) During the performance test, the owner or operator of a cold top electric furnace that is not equipped with an add-on control device for PM emissions control, must monitor and record the temperature 46 to 61 centimeters (18 to 24 inches) above the molten glass surface to ensure that the maximum temperature does not exceed 120 °C (250 °F).

(7) During the performance test, the owner or operator of a glass melting furnace (other than a cold top electric furnace) that is not equipped with an add-on control device for PM emissions control, must monitor and record the furnace parameter level, and establish the minimum and/or maximum value(s) that will be used to demonstrate compliance after the initial performance test.

(8) The owner or operator must conduct a performance test for each rotary spin manufacturing line, subject to this subpart, while producing the building insulation with the highest LOI expected to be produced on that line; and for each flame attenuation manufacturing line, subject to this subpart, while producing the heavy-density product or pipe product with the highest LOI expected to be produced on the affected line.

(9) The owner or operator of each rotary spin manufacturing line and flame attenuation manufacturing line regulated by this subpart must conduct performance tests using the resin with the highest free-formaldehyde content. During the performance test of each rotary spin manufacturing line and flame attenuation manufacturing line regulated by this subpart, the owner or operator shall monitor and record the free-formaldehyde content of the resin, the binder formulation used, and the product LOI and density.

(10) During the performance test, the owner or operator of a rotary spin manufacturing line or flame attenuation manufacturing line who plans to use process modifications to comply with the emission limits in § 63.1382 must monitor and record the process parameter level(s), as specified in the operations, maintenance, and monitoring plan, which will be used to demonstrate compliance after the initial performance test.

(11) During the performance test, the owner or operator of a rotary spin manufacturing line or flame attenuation manufacturing line who plans to use a wet scrubbing control device to comply with the emission limits in § 63.1382 must continuously monitor and record the pressure drop across the scrubber, the scrubbing liquid flow rate, and addition of any chemical to the scrubber, including the chemical feed rate, and establish the minimum and/or maximum value(s) that will be used to determine compliance after the initial performance test.

(12) During the performance test, the owner or operator of a rotary spin manufacturing line or affected flame attenuation manufacturing line shall continuously record the operating temperature of each incinerator and record the average during each 1-hour test; the average operating temperature of the three 1-hour tests shall be used to monitor compliance.

(13) Unless disapproved by the Administrator, an owner or operator of a rotary spin or flame attenuation manufacturing line regulated by this subpart may conduct short-term experimental production runs using binder formulations or other process modifications where the process parameter values would be outside those established during performance tests without first conducting performance tests. Such runs must not exceed 1 week in duration unless the Administrator approves a longer period. The owner or operator must notify the Administrator and postmark or deliver the notification at least 15 days prior to commencement of the short-term experimental production runs. The Administrator must inform the owner or operator of a decision to disapprove or must request additional information prior to the date of the short-term experimental production runs. Notification of intent to perform an experimental short-term production run shall include the following information:

(i) The purpose of the experimental production run;

(ii) The affected line;

(iii) How the established process parameters will deviate from previously approved levels;

(iv) The duration of the experimental production run;

(v) The date and time of the experimental production run; and

(vi) A description of any emission testing to be performed during the experimental production run.

(b) To determine compliance with the PM emission limit for glass-melting furnaces, use the following equation:

$$E = \frac{C \times Q \times K_1}{P} \qquad \text{(Eq. 1)}$$

Where:

E = Emission rate of PM, kg/Mg (lb/ton) of glass pulled;

C = Concentration of PM, g/dscm (gr/dscf);

Q = Volumetric flow rate of exhaust gases, dscm/h (dscf/h);

K_1 = Conversion factor, 1 kg/1,000 g (1 lb/7,000 gr); and

P = Average glass pull rate, Mg/h (tons/h).

(c) To determine compliance with the emission limit for formaldehyde for rotary spin manufacturing lines and flame attenuation forming processes, use the following equation:

$$E = \frac{C \times MW \times Q \times K_1 \times K_2}{K_3 \times P \times 10^6} \qquad \text{(Eq. 2)}$$

Where:

E = Emission rate of formaldehyde, kg/Mg (lb/ton) of glass pulled;

C = Measured volume fraction of formaldehyde, ppm;

MW = Molecular weight of formaldehyde, 30.03 g/g-mol;

Q = Volumetric flow rate of exhaust gases, dscm/h (dscf/h);

K_1 = Conversion factor, 1 kg/1,000 g (1 lb/453.6 g);

K_2 = Conversion factor, 1,000 L/m^3 (28.3 L/ft^3);

K_3 = Conversion factor, 24.45 L/g-mol; and

P = Average glass pull rate, Mg/h (tons/h).

§ 63.1385 Test methods and procedures.

(a) The owner or operator shall use the following methods to determine compliance with the applicable emission limits:

(1) Method 1 (40 CFR part 60, appendix A) for the selection of the sampling port location and number of sampling ports;

(2) Method 2 (40 CFR part 60, appendix A) for volumetric flow rate;

(3) Method 3 or 3A (40 CFR part 60, appendix A) for O_2 and CO_2 for diluent measurements needed to correct the concentration measurements to a standard basis;

(4) Method 4 (40 CFR part 60, appendix A) for moisture content of the stack gas;

(5) Method 5 (40 CFR part 60, appendix A) for the concentration of PM. Each run shall consist of a minimum run time of 2 hours and a minimum sample volume of 60 dry standard cubic feet (dscf). The probe

and filter holder heating system may be set to provide a gas temperature no greater than 177 ±14 °C (350 ±25 °F);

(6) Method 316 or Method 318 (appendix A of this part) for the concentration of formaldehyde. Each run shall consist of a minimum run time of 1 hour;

(7) Method contained in appendix A of this subpart for the determination of product LOI;

(8) Method contained in appendix B of this subpart for the determination of the free-formaldehyde content of resin;

(9) Method contained in appendix C of this subpart for the determination of product density;

(10) An alternative method, subject to approval by the Administrator.

(b) Each performance test shall consist of 3 runs. The owner or operator shall use the average of the three runs in the applicable equation for determining compliance.

§ 63.1386 Notification, recordkeeping, and reporting requirements.

(a) *Notifications.* As required by § 63.9(b) through (h) of this part, the owner or operator shall submit the following written initial notifications to the Administrator:

(1) Notification for an area source that subsequently increases its emissions such that the source is a major source subject to the standard;

(2) Notification that a source is subject to the standard, where the initial startup is before June 14, 2002.

(3) Notification that a source is subject to the standard, where the source is new or has been reconstructed, the initial startup is after June 14, 2002, and for which an application for approval of construction or reconstruction is not required;

(4) Notification of intention to construct a new major source or reconstruct a major source; of the date construction or reconstruction commenced; of the anticipated date of startup; of the actual date of startup, where the initial startup of a new or reconstructed source occurs after June 14, 2002, and for which an application for approval or construction or reconstruction is required (See § 63.9(b)(4) and (5) of this part);

(5) Notification of special compliance obligations;

(6) Notification of performance test; and (7) Notification of compliance status.

(b) *Performance test report.* As required by § 63.10(d)(2) of the general provisions, the owner or operator shall report the results of the initial performance test as part of the notification of compliance status required in paragraph (a)(7) of this section.

(c) *Startup, shutdown, and malfunction plan and reports.* (1) The owner or operator shall develop and implement a written plan as described in § 63.6(e)(3) of this part that contains specific procedures to be followed for operating the source and maintaining the source during periods of startup, shutdown, and malfunction and a program of corrective action for malfunctioning process modifications and control systems used to comply with the standard. In addition to the information required in § 63.6(e)(3), the plan shall include:

(i) Procedures to determine and record the cause of the malfunction and the time the malfunction began and ended;

(ii) Corrective actions to be taken in the event of a malfunction of a control device or process modification, including procedures for recording the actions taken to correct the malfunction or minimize emissions; and

(iii) A maintenance schedule for each control device and process modification that is consistent with the manufacturer's instructions and recommendations for routine and long-term maintenance.

(2) The owner or operator shall also keep records of each event as required by § 63.10(b) of this part and record and report if an action taken during a startup, shutdown, or malfunction is not consistent with the procedures in the plan as described in § 63.10(e)(3)(iv) of this part.

(d) *Recordkeeping.* (1) As required by § 63.10(b) of this part, the owner or operator shall maintain files of all information (including all reports and notifications) required by the general provisions and this subpart:

(i) The owner or operator must retain each record for at least 5 years following the date of each occurrence, measurement, maintenance, corrective action, report, or record. The most recent 2 years of records must be retained at the facility. The remaining 3 years of records may be retained off site;

(ii) The owner or operator may retain records on microfilm, on a computer, on computer disks, on magnetic tape, or on microfiche; and

(iii) The owner or operator may report required information on paper or on a labeled computer disk using commonly available and EPA-compatible computer software.

(2) In addition to the general records required by § 63.10(b)(2) of this part, the owner or operator shall maintain records of the following information:

(i) Any bag leak detection system alarms, including the date and time of the alarm, when corrective actions were initiated, the cause of the alarm, an explanation of the corrective actions taken, and when the cause of the alarm was corrected;

(ii) ESP parameter value(s) used to monitor ESP performance, including any period when the value(s) deviated from the established limit(s), the date and time of the deviation, when corrective actions were initiated, the cause of the deviation, an explanation of the corrective actions taken, and when the cause of the deviation was corrected;

(iii) Air temperature above the molten glass in an uncontrolled cold top electric furnace, including any period when the temperature exceeded 120 °C (250 °F) at a location 46 to 61 centimeters (18 to 24 inches) above the molten glass surface, the date and time of the exceedance, when corrective actions were initiated, the cause of the exceedance, an explanation of the corrective actions taken, and when the cause of the exceedance was corrected;

(iv) Uncontrolled glass-melting furnace (that is not a cold top electric furnace) parameter value(s) used to monitor furnace performance, including any period when the value(s) exceeded the established limit(s), the date and time of the exceedance, when corrective actions were initiated, the cause of the exceedance, an explanation of the corrective actions taken, and when the cause of the exceedance was corrected;

(v) The formulation of each binder batch and the LOI and density for each product manufactured on a rotary spin manufacturing line or flame attenuation manufacturing line subject to the provisions of this subpart, and the free formaldehyde content of each resin shipment received and used in the binder formulation;

(vi) Process parameter level(s) for RS and FA manufacturing lines that use process modifications to comply with the emission limits, including any period when the parameter level(s) deviated from the established limit(s), the date and time of the deviation, when corrective actions were initiated, the cause of the deviation, an explanation of the corrective actions taken, and when the cause of the deviation was corrected;

(vii) Scrubber pressure drop, scrubbing liquid flow rate, and any chemical additive (including chemical feed rate to the scrubber), including any period when a parameter level(s) deviated from the established limit(s), the date and time of the deviation, when corrective actions were initiated, the cause of the deviation, an explanation of

the corrective actions taken, and when the cause of the deviation was corrected;

(viii) Incinerator operating temperature and results of periodic inspection of incinerator components, including any period when the temperature fell below the established average or the inspection identified problems with the incinerator, the date and time of the problem, when corrective actions were initiated, the cause of the problem, an explanation of the corrective actions taken, and when the cause of the problem was corrected;

(ix) Glass pull rate, including any period when the pull rate exceeded the average pull rate established during the performance test by more than 20 percent, the date and time of the exceedance, when corrective actions were initiated, the cause of the exceedance, an explanation of the corrective actions taken, and when the cause of the exceedance was corrected.

(e) *Excess emissions report.* As required by § 63.10(e)(3)(v) of this part, the owner or operator shall report semiannually if measured emissions are in excess of the applicable standard or a monitored parameter deviates from the levels established during the performance test. The report shall contain the information specified in § 63.10(c) of this part as well as the additional records required by the recordkeeping requirements of paragraph (d) of this section. When no deviations have occurred, the owner or operator shall submit a report stating that no excess emissions occurred during the reporting period.

§ 63.1387 Compliance dates.

(a) *Compliance dates.* The owner or operator subject to the provisions of this subpart shall demonstrate compliance with the requirements of this subpart by no later than:

(1) June 14, 2002, for an existing glass-melting furnace, rotary spin manufacturing line, or flame attenuation manufacturing line; or

(2) Upon startup for a new glass-melting furnace, rotary spin manufacturing line, or flame attenuation manufacturing line.

(b) *Compliance extension.* The owner or operator of an existing source subject to this subpart may request from the Administrator an extension of the compliance date for the emission standards for one additional year if such additional period is necessary for the installation of controls. The owner or operator shall submit a request for an extension according to the procedures in § 63.6(i)(3) of this part.

§§ 63.1388—63.1399 [Reserved]

TABLE 1 TO SUBPART NNN OF PART 63.—APPLICABILITY OF GENERAL PROVISIONS (40 CFR PART 63, SUBPART A) TO SUBPART NNN

General provisions citation	Requirement	Applies to subpart NNN	Explanation
63.1(a)(1)–(a)(4)	Applicability	Yes.	
63.1(a)(5)		No	[Reserved].
63.1(a)(6)–(a)(8)		Yes.	
63.1(a)(9)		No	[Reserved].
63.1(a)(10)–(a)(14)		Yes.	
63.1(b)(1)–(b)(3)	Initial Applicability Determination	Yes.	
63.1(c)(1)–(c)(2)	Applicability After Standard Established.	Yes.	
63.1(c)(3)		No	[Reserved].
63.1(c)(4)–(c)(5)		Yes.	
63.1(d)		No	[Reserved].
63.1(e)	Applicability of Permit Program	Yes.	
63.2	Definitions	Yes	Additional definitions in § 63.1381.
63.3(a)–(c)	Units and Abbreviations	Yes.	
63.4(a)(1)–(a)(3)	Prohibited Activities	Yes.	
63.4(a)(4)		No	[Reserved].
63.4(a)(5)		Yes.	
63.4(b)–(c)		Yes.	
63.5(a)(1)–(a)(2)	Construction/Reconstruction	Yes.	
63.5(b)(1)	Existing, New, Reconstructed	Yes.	
63.5(b)(2)		No	[Reserved].
63.5(b)(3)–(b)(6)		Yes.	
63.5(c)		No	[Reserved].
63.5(d)	Approval of Construction/Reconstruction.	Yes.	
63.5(e)		Yes.	
63.5(f)		Yes.	
63.6(a)	Compliance with Standards and Maintenance Requirements.	Yes.	
63.6(b)(1)–(b)(5)		Yes.	
63.6(b)(6)		No	[Reserved].
63.6(b)(7)		Yes.	
63.6(c)(1)	Compliance Date for Existing Sources.	Yes	§63.1387 specifies compliance dates.
63.6(c)(2)		Yes.	
63.6(c)(3)–(c)(4)		No	[Reserved].
63.6(c)(5)		Yes.	
63.6(d)		No	[Reserved].
63.6(e)(1)–(e)(2)	Operation & Maintenance	Yes	§ 63.1383 specifies operations/maintenance plan.
63.6(e)(3)	Startup, Shutdown Malfunction Plan.	Yes.	
63.6(f)(1)–(f)(3)	Compliance with Nonopacity Emission Standards.	Yes.	

TABLE 1 TO SUBPART NNN OF PART 63.—APPLICABILITY OF GENERAL PROVISIONS (40 CFR PART 63, SUBPART A) TO SUBPART NNN—Continued

General provisions citation	Requirement	Applies to subpart NNN	Explanation
63.6(g)(1)–(g)(3)	Alternative Nonopacity Standard	Yes.	
63.6(h)	Opacity/VE Standards	No	Subpart NNN-no COMS, VE or opacity standards.
63.6(i)(1)–(i)(14)	Extension of Compliance	Yes.	
63.6(i)(15)		No	[Reserved].
63.6(i)(16)		Yes.	
63.6(j)	Exemption from Compliance	Yes.	
63.7(a)	Performance Testing Requirements.	Yes	§ 63.1384 has specific requirements.
63.7(b)	Notification	Yes.	
63.7(c)	Quality Assurance Program/Test Plan.	Yes.	
63.7(d)	Performance Testing Facilities	Yes.	
63.7(e)(1)–(e)(4)	Conduct of Performance Tests	Yes.	
63.7(f)	Alternative Test Method	Yes.	
63.7(g)	Data Analysis	Yes.	
63.7(h)	Waiver of Performance Tests	Yes.	
63.8(a)(1)–(a)(2)	Monitoring Requirements	Yes.	
63.8(a)(3)		No	[Reserved].
63.8(a)(4)		Yes.	
63.8(b)	Conduct of Monitoring	Yes.	
63.8(c)	CMS Operation/Maintenance	Yes.	
63.8(d)	Quality Control Program	Yes.	
63.8(e)	Performance Evaluation for CMS	Yes.	
63.8(f)	Alternative Monitoring Method	Yes.	
63.8(g)	Reduction of Monitoring Data	Yes.	
63.9(a)	Notification Requirements	Yes.	
63.9(b)	Initial Notifications	Yes.	
63.9(c)	Request for Compliance Extension.	Yes.	
63.9(d)	New Source Notification for Special Compliance Requirements.	Yes.	
63.9(e)	Notification of Performance Test	Yes.	
63.9(f)	Notification of VE/Opacity Test	No	Opacity/VE tests not required.
63.9(g)	Additional CMS Notifications	Yes.	
63.9(h)(1)–(h)(3)	Notification of Compliance Status	Yes.	
63.9(h)(4)		No	[Reserved].
63.9(h)(5)–(h)(6)		Yes.	
63.9(i)	Adjustment of Deadlines	Yes.	
63.9(j)	Change in Previous Information	Yes.	
63.10(a)	Recordkeeping/Reporting	Yes.	
63.10(b)	General Requirements	Yes.	
63.10(c)(1)	Additional CMS Recordkeeping	Yes.	
63.10(c)(2)–(c)(4)		No	[Reserved].
63.10(c)(5)–(c)(8)		Yes.	
63.10(c)(9)		No	[Reserved].
63.10(c)(10)–(15)		Yes.	
63.10(d)(1)	General Reporting Requirements	Yes.	
63.10(d)(2)	Performance Test Results	Yes.	
63.10(d)(3)	Opacity or VE Observations	No	No limits for VE/opacity.
63.10(d)(4)	Progress Reports	Yes.	
63.10(d)(5)	Startup, Shutdown, Malfunction Reports.	Yes.	
63.10(e)(1)–(e)(3)	Additional CMS Reports	Yes.	
63.10(e)(4)	Reporting COM Data	No	COM not required.
63.10(f)	Waiver of Recordkeeping/Reporting.	Yes.	
63.11(a)	Control Device Requirements	Yes.	
63.11(b)	Flares	No	Flares not applicable.
63.12	State Authority and Delegations	Yes.	
63.13	State/Regional Addresses	Yes.	
63.14	Incorporation by Reference	No.	
63.15	Availability of Information	Yes.	

Appendix A to Subpart NNN of Part 63—Method for the Determination of LOI

1. Purpose

The purpose of this test is to determine the LOI of cured blanket insulation. The method is applicable to all cured board and blanket products.

2. Equipment

2.1 Scale sensitive to 0.1 gram.

2.2 Furnace designed to heat to at least 540 °C (1,000 °F) and controllable to ±10 °C (50 °F).

2.3 Wire tray for holding specimen while in furnace.

3. Procedure

3.1 Cut a strip along the entire width of the product that will weigh at least 10.0 grams. Sample should be free of dirt or foreign matter.

Note: Remove all facing from sample.

3.2 Cut the sample into pieces approximately 12 inches long, weigh to the nearest 0.1 gram and record. Place in wire tray. Sample should not be compressed or overhang on tray edges.

Note: On air duct products, remove shiplaps and overspray.

3.3 Place specimen in furnace at 540 °C (1,000 °F), ±10 °C (50 °F) for 15 to 20 minutes to insure complete oxidation. After ignition, fibers should be white and should not be fused together.

3.4 Remove specimen from the furnace and cool to room temperature.

3.5 Weigh cooled specimen and wire tray to the nearest 0.1 gram. Deduct the weight of the wire tray and then calculate the loss in weight as a percent of the original specimen weight.

Appendix B to Subpart NNN of Part 63—Free Formaldehyde Analysis of Insulation Resins by Hydroxylamine Hydrochloride

1. Scope

This method was specifically developed for water-soluble phenolic resins that have a relatively high free-formaldehyde (FF) content such as insulation resins. It may also be suitable for other phenolic resins, especially those with a high FF content.

2. Principle

2.1 a. The basis for this method is the titration of the hydrochloric acid that is liberated when hydroxylamine hydrochloride reacts with formaldehyde to form formaldoxine:

HCHO + NH2OH:HCl → CH2:NOH + H2O + HCl

b. Free formaldehyde in phenolic resins is present as monomeric formaldehyde, hemiformals, polyoxymethylene hemiformals, and polyoxymethylene glycols. Monomeric formaldehyde and hemiformals react rapidly with hydroxylamine hydrochloride, but the polymeric forms of formaldehyde must hydrolyze to the monomeric state before they can react. The greater the concentration of free formaldehyde in a resin, the more of that formaldehyde will be in the polymeric form. The hydrolysis of these polymers is catalyzed by hydrogen ions.

2.2 The resin sample being analyzed must contain enough free formaldehyde so that the initial reaction with hydroxylamine hydrochloride will produce sufficient hydrogen ions to catalyze the depolymerization of the polymeric formaldehyde within the time limits of the test method. The sample should contain approximately 0.3 grams free formaldehyde to ensure complete reaction within 5 minutes.

3. Apparatus

3.1 Balance, readable to 0.01 g or better.

3.2 pH meter, standardized to pH 4.0 with pH 4.0 buffer and pH 7 with pH 7.0 buffer.

3.3 50-mL burette for 1.0 N sodium hydroxide.

3.4 Magnetic stirrer and stir bars.

3.5 250-mL beaker.

3.6 50-mL graduated cylinder.

3.7 100-mL graduated cylinder.

3.8 Timer.

4. Reagents

4.1 Standardized 1.0 N sodium hydroxide solution.

4.2 Hydroxylamine hydrochloride solution, 100 grams per liter, pH adjusted to 4.00.

4.3 Hydrochloric acid solution, 1.0 N and 0.1 N.

4.4 Sodium hydroxide solution, 0.1 N.

4.5 50/50 v/v mixture of distilled water and methyl alcohol.

5. Procedure

5.1 Determine the sample size as follows:

a. If the expected FF is greater than 2 percent, go to Part A to determine sample size.

b. If the expected FF is less than 2 percent, go to Part B to determine sample size.

c. Part A: Expected FF ≥ 2 percent.

Grams resin = 60/expected percent FF

i. The following table shows example levels:

Expected % free formaldehyde	Sample size, grams
2	30.0
5	12.0
8	7.5
10	6.0
12	5.0
15	4.0

ii. It is very important to the accuracy of the results that the sample size be chosen correctly. If the milliliters of titrant are less than 15 mL or greater than 30 mL, reestimate the needed sample size and repeat the tests.

d. Part B: Expected FF < 2 percent

Grams resin = 30/expected percent FF

i. The following table shows example levels:

Expected % free formaldehyde	Sample size, grams
2	15
1	30
0.5	60

ii. If the milliliters of titrant are less than 5 mL or greater than 30 mL, reestimate the needed sample size and repeat the tests.

5.2 Weigh the resin sample to the nearest 0.01 grams into a 250-mL beaker. Record sample weight.

5.3 Add 100 mL of the methanol/water mixture and stir on a magnetic stirrer. Confirm that the resin has dissolved.

5.4 Adjust the resin/solvent solution to pH 4.0, using the prestandardized pH meter, 1.0 N hydrochloric acid, 0.1 N hydrochloric acid, and 0.1 N sodium hydroxide.

5.5 Add 50 mL of the hydroxylamine hydrochloride solution, measured with a graduated cylinder. Start the timer.

5.6 Stir for 5 minutes. Titrate to pH 4.0 with standardized 1.0 N sodium hydroxide. Record the milliliters of titrant and the normality.

6. Calculations

$$\% \text{ FF} = \frac{\text{mL sodium hydroxide} \times \text{normality} \times 3.003}{\text{grams of sample}}$$

7. Method Precision and Accuracy

Test values should conform to the following statistical precision:

Variance = 0.005

Standard deviation = 0.07

95% Confidence Interval, for a single determination = 0.2

8. Author

This method was prepared by K. K. Tutin and M. L. Foster, Tacoma R&D Laboratory, Georgia-Pacific Resins, Inc. (Principle written by R. R. Conner.)

9. References

9.1 GPAM 2221.2.

9.2 PR&C TM 2.035.

9.3 Project Report, Comparison of Free Formaldehyde Procedures, January 1990, K. K. Tutin.

Appendix C to Subpart NNN of Part 63—Method for the Determination of Product Density

1. Purpose

The purpose of this test is to determine the product density of cured blanket insulation. The method is applicable to all cured board and blanket products.

2. Equipment

One square foot (12 in. by 12 in.) template, or templates that are multiples of one square foot, for use in cutting insulation samples.

3. Procedure

3.1 Obtain a sample at least 30 in. long across the machine width. Sample should be free of dirt or foreign matter.

3.2 Lay out the cutting pattern according to the plant's written procedure for the designated product.

3.2 Cut samples using one square foot (or multiples of one square foot) template.

3.3 Weigh product and obtain area weight (lb/ft^2).

3.4 Measure sample thickness.

3.5 Calculate the product density:

Density (lb/ft^3) = area weight (lb/ft^2)/ thickness (ft)

5. Appendix A to part 63 is amended by adding in numerical order methods 316 and 318 to read as follows:

Appendix A To Part 63—Test Methods

* * * * *

Method 316—Sampling and Analysis for Formaldehyde Emissions From Stationary Sources in the Mineral Wool and Wool Fiberglass Industries

1.0 *Introduction*

This method is applicable to the determination of formaldehyde, CAS Registry number 50–00–0, from stationary sources in the mineral wool and wool fiber glass industries. High purity water is used to collect the formaldehyde. The formaldehyde concentrations in the stack samples are determined using the modified pararosaniline method. Formaldehyde can be detected as low as 8.8×10^{10} lbs/cu ft (11.3 ppbv) or as high as 1.8×10^{3} lbs/cu ft (23,000,000 ppbv), at standard conditions over a 1 hour sampling period, sampling approximately 30 cu ft.

2.0 *Summary of Method*

Gaseous and particulate pollutants are withdrawn isokinetically from an emission source and are collected in high purity water. Formaldehyde present in the emissions is highly soluble in high purity water. The high purity water containing formaldehyde is then analyzed using the modified pararosaniline method. Formaldehyde in the sample reacts with acidic pararosaniline, and the sodium sulfite, forming a purple chromophore. The intensity of the purple color, measured spectrophotometrically, provides an accurate and precise measure of the formaldehyde concentration in the sample.

3.0 *Definitions*

See the definitions in the General Provisions of this Subpart.

4.0 *Interferences*

Sulfite and cyanide in solution interfere with the pararosaniline method. A procedure to overcome the interference by each compound has been described by Miksch, et al.

5.0 *Safety*. (Reserved)

6.0 *Apparatus and Materials*

6.1 A schematic of the sampling train is shown in Figure 1. This sampling train configuration is adapted from EPA Method 5, 40 CFR part 60, appendix A, procedures.

BILLING CODE 6560–50–P

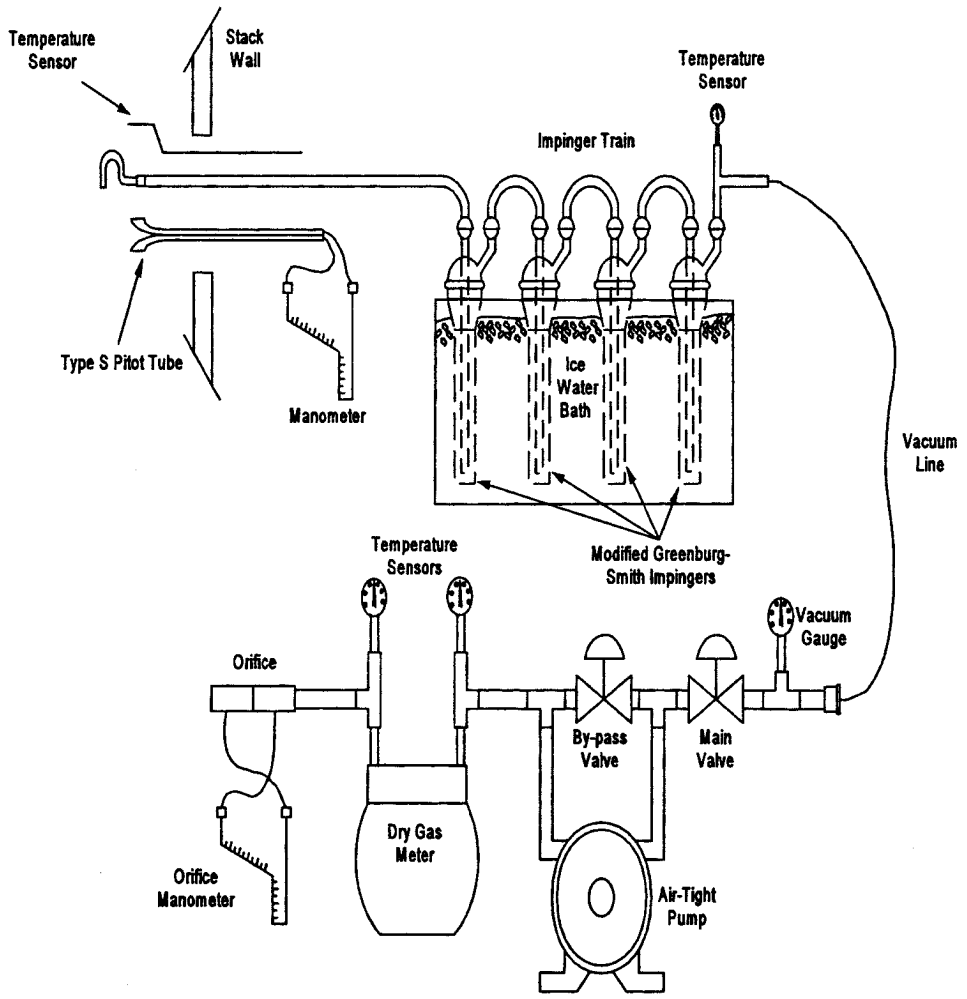

Figure 1. Sampling Train.

The sampling train consists of the following components: probe nozzle, probe liner, pitot tube, differential pressure gauge, impingers, metering system, barometer, and gas density determination equipment.

6.1.1 Probe Nozzle: Quartz, glass, or stainless steel with sharp, tapered (30° angle) leading edge. The taper shall be on the outside to preserve a constant inner diameter. The nozzle shall be buttonhook or elbow design. A range of nozzle sizes suitable for isokinetic sampling should be available in increments of 0.15 cm (1/16 in), e.g., 0.32 to 1.27 cm (1/8 to 1/2 in), or larger if higher volume sampling trains are used. Each nozzle shall be calibrated according to the procedure outlined in Section 10.1.

6.1.2 Probe Liner: Borosilicate glass or quartz shall be used for the probe liner. The probe shall be maintained at a temperature of 120°C ± 14°C (248°F ± 25°F).

6.1.3 Pitot Tube: The pitot tube shall be Type S, as described in Section 2.1 of EPA Method 2, 40 CFR part 60, appendix A, or any other appropriate device. The pitot tube shall be attached to the probe to allow constant monitoring of the stack gas velocity. The impact (high pressure) opening plane of the pitot tube shall be even with or above the nozzle entry plane (see Figure 2–6b, EPA Method 2, 40 CFR part 60, appendix A) during sampling. The Type S pitot tube assembly shall have a known coefficient, determined as outlined in Section 4 of EPA Method 2, 40 CFR part 60, appendix A.

6.1.4 Differential Pressure Gauge: The differential pressure gauge shall be an inclined manometer or equivalent device as described in Section 2.2 of EPA Method 2, 40 CFR part 60, appendix A. One manometer shall be used for velocity-head reading and the other for orifice differential pressure readings.

6.1.5 Impingers: The sampling train requires a minimum of four impingers, connected as shown in Figure 1, with ground glass (or equivalent) vacuum-tight fittings. For the first, third, and fourth impingers, use the Greenburg-Smith design, modified by replacing the tip with a 1.3 cm inside diameters (1/2 in) glass tube extending to 1.3 cm (1/2 in) from the bottom of the flask. For the second impinger, use a Greenburg-Smith impinger with the standard tip. Place a thermometer capable of measuring temperature to within 1°C (2°F) at the outlet of the fourth impinger for monitoring purposes.

6.1.6 Metering System: The necessary components are a vacuum gauge, leak-free pump, thermometers capable of measuring temperatures within 3°C (5.4°F), dry-gas meter capable of measuring volume to within 1 percent, and related equipment as shown in Figure 1. At a minimum, the pump should be capable of 4 cfm free flow, and the dry gas meter should have a recording capacity of 0–999.9 cu ft with a resolution of 0.005 cu ft. Other metering systems may be used which are capable of maintaining sample volumes to within 2 percent. The metering system may be used in conjunction with a pitot tube to enable checks of isokinetic sampling rates.

6.1.7 Barometer: The barometer may be mercury, aneroid, or other barometer capable of measuring atmospheric pressure to within 2.5 mm Hg (0.1 in Hg). In many cases, the barometric reading may be obtained from a nearby National Weather Service Station, in which case the station value (which is the absolute barometric pressure) is requested and an adjustment for elevation differences between the weather station and sampling point is applied at a rate of minus 2.5 mm Hg (0.1 in Hg) per 30 m (100 ft) elevation increase (rate is plus 2.5 mm Hg per 30 m (100 ft) of elevation decrease).

6.1.8 Gas Density Determination Equipment: Temperature sensor and pressure gauge (as described in Sections 2.3 and 2.3 of EPA Method 2, 40 CFR part 60, appendix A), and gas analyzer, if necessary (as described in EPA Method 3, 40 CFR part 60, appendix A). The temperature sensor ideally should be permanently attached to the pitot tube or sampling probe in a fixed configuration such that the top of the sensor extends beyond the leading edge of the probe sheath and does not touch any metal. Alternatively, the sensor may be attached just prior to use in the field. Note, however, that if the temperature sensor is attached in the field, the sensor must be placed in an interference-free arrangement with respect to the Type S pitot openings (see Figure 2–7, EPA Method 2, 40 CFR part 60, appendix A). As a second alternative, if a difference of no more than 1 percent in the average velocity measurement is to be introduced, the temperature gauge need not be attached to the probe or pitot tube.

6.2 Sample Recovery

6.2.1 Probe Liner: Probe nozzle and brushes; bristle brushes with stainless steel wire handles are required. The probe brush shall have extensions of stainless steel, Teflon ™, or inert material at least as long as the probe. The brushes shall be properly sized and shaped to brush out the probe liner, the probe nozzle, and the impingers.

6.2.2 Wash Bottles: One wash bottle is required. Polyethylene, Teflon ™, or glass wash bottles may be used for sample recovery.

6.2.3 Graduated Cylinder and/or Balance: A graduated cylinder or balance is required to measure condensed water to the nearest 1 ml or 1 g. Graduated cylinders shall have division not >2 ml. Laboratory balances capable of weighing to ± 0.5 g are required.

6.2.4 Polyethylene Storage Containers: 500 ml wide-mouth polyethylene bottles are required to store impinger water samples.

6.2.5 Rubber Policeman and Funnel: A rubber policeman and funnel are required to aid the transfer of material into and out of containers in the field.

6.3 Sample Analysis

6.3.1 Spectrophotometer—B&L 70, 710, 2000, etc., or equivalent; 1 cm pathlength cuvette holder.

6.3.2 Disposable polystyrene cuvettes, pathlengh 1 cm, volume of about 4.5 ml.

6.3.3 Pipettors—Fixed-volume Oxford pipet (250 µl; 500 µl; 1000 µl); adjustable volume Oxford or equivalent pipettor 1–5 ml model, set to 2.50 ml.

6.3.4 Pipet tips for pipettors above.

6.3.5 Parafilm, 2° wide; cut into about 1'' squares.

7.0 *Reagents*

7.1 High purity water: All references to water in this method refer to high purity water (ASTM Type I water or equivalent). The water purity will dictate the lower limits of formaldehyde quantification.

7.2 Silica Gel: Silica gel shall be indicting type, 6–16 mesh. If the silica gel has been used previously, dry at 175°C (350°F) for 2 hours before using. New silica gel may be used as received. Alternatively, other types of desiccants (equivalent or better) may be used.

7.3 Crushed Ice: Quantities ranging from 10–50 lbs may be necessary during a sampling run, depending upon ambient temperature. Samples which have been taken must be stored and shipped cold; sufficient ice for this purpose must be allowed.

7.4 Quaternary ammonium compound stock solution: Prepare a stock solution of dodecyltrimethylammonium chloride (98 percent minimum assay, reagent grade) by dissolving 1.0 gram in 1000 ml water. This solution contains nominally 1000 µg/ml quaternary ammonium compound, and is used as a biocide for some sources which are prone to microbial contamination.

7.5 Pararosaniline: Weigh 0.16 grams pararosaniline (free base; assay of 95 percent or greater, C.I. 42500; Sigma P7632 has been found to be acceptable) into a 100 ml flask. Exercise care, since pararosaniline is a dye and will stain. Using a wash bottle with high-purity water, rinse the walls of the flask. Add no more than 25 ml water. Then, carefully add 20 ml of concentrated hydrochloric acid to the flask. The flask will become warm after the addition of acid. Add a magnetic stir bar to the flask, cap, and place on a magnetic stirrer for approximately 4 hours. Then, add additional water so the total volume is 100 ml. This solution is stable for several months when stored tightly capped at room temperature.

7.6 Sodium sulfite: Weigh 0.10 grams anhydrous sodium sulfite into a 100 ml flask. Dilute to the mark with high purity water. Invert 15–20 times to mix and dissolve the sodium sulfite. This solution must be prepared fresh every day.

7.7 Formaldehyde standard solution: Pipet exactly 2.70 ml of 37 percent formaldehyde solution into a 1000 ml volumetric flask which contains about 500 ml of high-purity water. Dilute to the mark with high-purity water. This solution contains nominally 1000 µg/ml of formaldehyde, and is used to prepare the working formaldehyde standards. The exact formaldehyde concentration may be determined if needed by suitable modification of the sodium sulfite method (Reference: J.F. Walker, Formaldehyde (Third Edition), 1964.). The 1000 µg/ml formaldehyde stock solution is stable for at least a year if kept tightly closed, with the neck of the flask sealed with Parafilm. Store at room temperature.

7.8 Working formaldehyde standards: Pipet exactly 10.0 ml of the 1000 µg/ml formaldehyde stock solution into a 100 ml volumetric flask which is about half full of high-purity water. Dilute to the mark with high-purity water, and invert 15–20 times to mix thoroughly. This solution contains nominally 100 µg/ml formaldehyde. Prepare

the working standards from this 100 µg/ml standard solution and using the Oxford pipets:

Working standard, µ/mL	µL or 100 µg/mL solution	Volumetric flask volume (dilute to mark with water)
0.250	250	100
0.500	500	100
1.00	1000	100
2.00	2000	100
3.00	1500	50

The 100 µg/ml stock solution is stable for 4 weeks if kept refrigerated between analyses. The working standards (0.25–3.00 µg/ml) should be prepared fresh every day, consistent with good laboratory practice for trace analysis. If the laboratory water is not of sufficient purity, it may be necessary to prepare the working standards every day. The laboratory must establish that the working standards are stable—DO NOT assume that your working standards are stable for more than a day unless you have verified this by actual testing for several series of working standards.

8.0 *Sample Collection*

8.1 Because of the complexity of this method, field personnel should be trained in and experienced with the test procedures in order to obtain reliable results.

8.2 Laboratory Preparation

8.2.1 All the components shall be maintained and calibrated according to the procedure described in APTD–0576, unless otherwise specified.

8.2.2 Weigh several 200 to 300 g portions of silica gel in airtight containers to the nearest 0.5 g. Record on each container the total weight of the silica gel plus containers. As an alternative to preweighing the silica gel, it may instead be weighed directly in the impinger or sampling holder just prior to train assembly.

8.3 Preliminary Field Determinations

8.3.1 Select the sampling site and the minimum number of sampling points according to EPA Method 1, 40 CFR part 60, appendix A, or other relevant criteria. Determine the stack pressure, temperature, and range of velocity heads using EPA Method 2, 40 CFR part 60, appendix A. A leak-check of the pitot lines according to Section 3.1 of EPA Method 2, 40 CFR part 60, appendix A, must be performed. Determine the stack gas moisture content using EPA Approximation Method 4,40 CFR part 60, appendix A, or its alternatives to establish estimates of isokinetic sampling rate settings. Determine the stack gas dry molecular weight, as described in EPA Method 2, 40 CFR part 60, appendix A, Section 3.6. If integrated EPA Method 3, 40 CFR part 60, appendix A, sampling is used for molecular weight determination, the integrated bag sample shall be taken simultaneously with, and for the same total length of time as, the sample run.

8.3.2 Select a nozzle size based on the range of velocity heads so that it is not necessary to change the nozzle size in order to maintain isokinetic sampling rates below 28 l/min (1.0 cfm). During the run do not change the nozzle. Ensure that the proper differential pressure gauge is chosen for the range of velocity heads encountered (see Section 2.2 of EPA Method 2, 40 CFR part 60, appendix A).

8.3.3 Select a suitable probe liner and probe length so that all traverse points can be sampled. For large stacks, to reduce the length of the probe, consider sampling from opposite sides of the stack.

8.3.4 A minimum of 30 cu ft of sample volume is suggested for emission sources with stack concentrations not greater than 23,000,000 ppbv. Additional sample volume shall be collected as necessitated by the capacity of the water reagent and analytical detection limit constraint. Reduced sample volume may be collected as long as the final concentration of formaldehyde in the stack sample is greater than 10 (ten) times the detection limit.

8.3.5 Determine the total length of sampling time needed to obtain the identified minimum volume by comparing the anticipated average sampling rate with the volume requirement. Allocate the same time to all traverse points defined by EPA Method 1, 40 CFR part 60, appendix A. To avoid timekeeping errors, the length of time sampled at each traverse point should be an integer or an integer plus 0.5 min.

8.3.6 In some circumstances (e.g., batch cycles) it may be necessary to sample for shorter times at the traverse points and to obtain smaller gas-volume samples. In these cases, careful documentation must be maintained in order to allow accurate calculations of concentrations.

8.4 Preparation of Collection Train

8.4.1 During preparation and assembly of the sampling train, keep all openings where contamination can occur covered with Teflon™ film or aluminum foil until just prior to assembly or until sampling is about to begin.

8.4.2 Place 100 ml of water in each of the first two impingers, and leave the third impinger empty. If additional capacity is required for high expected concentrations of formaldehyde in the stack gas, 200 ml of water per impinger may be used or additional impingers may be used for sampling. Transfer approximately 200 to 300 g of pre-weighed silica gel from its container to the fourth impinger. Care should be taken to ensure that the silica gel is not entrained and carried out from the impinger during sampling. Place the silica gel container in a clean place for later use in the sample recovery. Alternatively, the weight of the silica gel plus impinger may be determined to the nearest 0.5 g and recorded.

8.4.3 With a glass or quartz liner, install the selected nozzle using a Viton-A O-ring when stack temperatures are <260°C (500°F) and a woven glass-fiber gasket when temperatures are higher. See APTD–0576 for details. Other connection systems utilizing either 316 stainless steel or Teflon™ ferrules may be used. Mark the probe with heat-resistant tape or by some other method to denote the proper distance into the stack or duct for each sampling point.

8.4.4 Assemble the train as shown in Figure 1. During assembly, a very light coating of silicone grease may be used on ground-glass joints of the impingers, but the silicone grease should be limited to the outer portion (see APTD–0576) of the ground-glass joints to minimize silicone grease contamination. If necessary, Teflon™ tape may be used to seal leaks. Connect all temperature sensors to an appropriate potentiometer/display unit. Check all temperature sensors at ambient temperatures.

8.4.5 Place crushed ice all around the impingers.

8.4.6 Turn on and set the probe heating system at the desired operating temperature. Allow time for the temperature to stabilize.

8.5 Leak-Check Procedures

8.5.1 Pre-test Leak-check: Recommended, but not required. If the tester elects to conduct the pre-test leak-check, the following procedure shall be used.

8.5.1.1 After the sampling train has been assembled, turn on and set probe heating system at the desired operating temperature. Allow time for the temperature to stabilize. If a Viton-a O-ring or other leak-free connection is used in assembling the probe nozzle to the probe liner, leak-check the train at the sampling site by plugging the nozzle and pulling a 381 mm Hg (15 in Hg) vacuum.

Note: A lower vacuum may be used, provided that the lower vacuum is not exceeded during the test.

If a woven glass fiber gasket is used, do not connect the probe to the train during the leak-check. Instead, leak-check the train by first attaching a carbon-filled leak-check impinger to the inlet and then plugging the inlet and pulling a 381 mm Hg (15 in Hg) vacuum. (A lower vacuum may be used if this lower vacuum is not exceeded during the test.) Next connect the probe to the train and leak-check at about 25 mm Hg (1 in Hg) vacuum. Alternatively, leak-check the probe with the rest of the sampling train in one step at 381 mm Hg (15 in Hg) vacuum. Leakage rates in excess of (a) 4 percent of the average sampling rate or (b) 0.00057 m^3/min (0.02 cfm), whichever is less, are unacceptable.

8.5.1.2 The following leak-check instructions for the sampling train described in APTD–0576 and APTD–0581 may be helpful. Start the pump with the fine-adjust valve fully open and coarse-valve completely closed. Partially open the coarse-adjust valve and slowly close the fine-adjust valve until the desired vacuum is reached. Do not reverse direction of the fine-adjust valve, as liquid will back up into the train. If the desired vacuum is exceeded, either perform the leak-check at this higher vacuum or end the leak-check, as described below, and start over.

8.5.1.3 When the leak-check is completed, first slowly remove the plug from the inlet to the probe. When the vacuum drops to 127 mm (5 in) Hg or less, immediately close the coarse-adjust valve. Switch off the pumping system and reopen the fine-adjust valve. Do not reopen the fine-adjust valve until the coarse-adjust valve has been closed to prevent the liquid in the impingers from being forced backward in the sampling line and silica gel from being entrained backward into the third impinger.

8.5.2 Leak-checks During Sampling Run:

8.5.2.1 If, during the sampling run, a component change (e.g., impinger) becomes necessary, a leak-check shall be conducted immediately after the interruption of sampling and before the change is made. The leak-check shall be done according to the procedure described in Section 10.3.3, except that it shall be done at a vacuum greater than or equal to the maximum value recorded up to that point in the test. If the leakage rate is found to be no greater than 0.0057 m^3/min (0.02 cfm) or 4 percent of the average sampling rate (whichever is less), the results are acceptable. If a higher leakage rate is obtained, the tester must void the sampling run.

Note: Any correction of the sample volume by calculation reduces the integrity of the pollutant concentration data generated and must be avoided.

8.5.2.2 Immediately after component changes, leak-checks are optional. If performed, the procedure described in section 8.5.1.1 shall be used.

8.5.3 Post-test Leak-check:

8.5.3.1 A leak-check is mandatory at the conclusion of each sampling run. The leak-check shall be done with the same procedures as the pre-test leak-check, except that the post-test leak-check shall be conducted at a vacuum greater than or equal to the maximum value reached during the sampling run. If the leakage rate is found to be no greater than 0.00057 m^3/min (0.02 cfm) or 4 percent of the average sampling rate (whichever is less), the results are acceptable. If, however, a higher leakage rate is obtained, the tester shall record the leakage rate and void the sampling run.

8.6 Sampling Train Operation

8.6.1 During the sampling run, maintain an isokinetic sampling rate to within 10 percent of true isokinetic, below 28 l/min (1.0 cfm). Maintain a temperature around the probe of 120°C ± 14°C (248° ± 25°F).

8.6.2 For each run, record the data on a data sheet such as the one shown in Figure 2. Be sure to record the initial dry-gas meter reading. Record the dry-gas meter readings at the beginning and end of each sampling time increment, when changes in flow rates are made, before and after each leak-check, and when sampling is halted. Take other readings required by Figure 2 at least once at each sample point during each time increment and additional readings when significant adjustments (20 percent variation in velocity head readings) necessitate additional adjustments in flow rate. Level and zero the manometer. Because the manometer level and zero may drift due to vibrations and temperature changes, make periodic checks during the traverse.

BILLING CODE 6560–50–P

Figure 2 - Formaldehyde Field Data

Plant . . . . . .

Location . . . . . .

Operator . . . . . .

Date . . . . . .

Run No . . . . . .

Sample box No . . . . . .

Meter box No . . . . . .

Meter ΔH . . . . . .

C Factor . . . . . .

Pitot tube coefficient, Op

SCHEMATIC OF STACK CROSS SECTION

Ambient temperature . . . . . .

Barometric pressure . . . . . .

Assumed moisture, percent . . . .

Probe length, m (ft) . . . . . .

Nozzle Identification No . . . .

Average calibrated nozzle diameter, cm (in.) . . . . . .

Probe heater setting . . . . . .

Leak rate, m^3/min (cfm) . . . . .

Probe liner material . . . . . .

Static pressure, mm Hg (in. Hg) .

Filter No. . . . . .

BILLING CODE 6560–50–C

Traverse point number	Sampling time (e) min.	Vacuum mm Hg (in. Hg)	Stack temperature (T) °C (°F)	Velocity head (ΔP) mm (in) H_2O	Pressure differential across orifice meter mm H_2O (in. H_2O)	Gas sample volume m^3 (ft^3)	Gas sample temperature at dry gas meter		Filter holder temperature °C (°F)	Temperature of gas leaving condenser or last impinger °C (°F)
							Inlet °C (°F)	Outlet °C (°F)		
	.....	.....	.....	.....	.....	.....	.....	.....	.....	.....
	.....	.....	.....	.....	.....	.....	.....	.....	.....	.....
	.....	.....	.....	.....	.....	.....	.....	.....	.....	.....
	.....	.....	.....	.....	.....	.....	.....	.....	.....	.....
	.....	.....	.....	.....	.....	.....	.....	.....	.....	.....
Total	.....	.....	.....	.....	.....	.....	Avg.	Avg.	.....	.....
Average	.....	.....	.....	.....	.....	.....	Avg.	.....	.....	.....

8.6.3 Clean the stack access ports prior to the test run to eliminate the chance of sampling deposited material. To begin sampling, remove the nozzle cap, verify that the probe heating system are at the specified temperature, and verify that the pitot tube and probe are properly positioned. Position the nozzle at the first traverse point, with the tip pointing directly into the gas stream. Immediately start the pump and adjust the flow to isokinetic conditions. Nomographs, which aid in the rapid adjustment of the isokinetic sampling rate without excessive computations, are available. These nomographs are designed for use when the Type S pitot tube coefficient is 0.84 ± 0.02 and the stack gas equivalent density (dry molecular weight) is equal to 29 ± 4. APTD–0576 details the procedure for using the nomographs. If the stack gas molecular weight and the pitot tube coefficient are outside the above ranges, do not use the nomographs unless appropriate steps are taken to compensate for the deviations.

8.6.4 When the stack is under significant negative pressure (equivalent to the height of the impinger stem), take care to close the coarse-adjust valve before inserting the probe into the stack in order to prevent liquid from backing up through the train. If necessary, a low vacuum on the train may have to be started prior to entering the stack.

8.6.5 When the probe is in position, block off the openings around the probe and stack access port to prevent unrepresentative dilution of the gas stream.

8.6.6 Traverse the stack cross section, as required by EPA Method 1, 40 CFR part 60, appendix A, being careful not to bump the probe nozzle into the stack walls when sampling near the walls or when removing or inserting the probe through the access port, in order to minimize the chance of extracting deposited material.

8.6.7 During the test run, make periodic adjustments to keep the temperature around the probe at the proper levels. Add more ice and, if necessary, salt, to maintain a temperature of <20°C (68°F) at the silica gel outlet.

8.6.8 A single train shall be used for the entire sampling run, except in cases where simultaneous sampling is required in two or more separate ducts or at two or more different locations within the same duct, or in cases where equipment failure necessitates a change of trains. An additional train or trains may also be used for sampling when the capacity of a single train is exceeded.

8.6.9 When two or more trains are used, separate analyses of components from each train shall be performed. If multiple trains have been used because the capacity of a single train would be exceeded, first impingers from each train may be combined, and second impingers from each train may be combined.

8.6.10 At the end of the sampling run, turn off the coarse-adjust valve, remove the probe and nozzle from the stack, turn off the pump, record the final dry gas meter reading, and conduct a post-test leak-check. Also, check the pitot lines as described in EPA Method 2, 40 CFR part 60, appendix A. The lines must pass this leak-check in order to validate the velocity-head data.

8.6.11 Calculate percent isokineticity (see Method 2) to determine whether the run was valid or another test should be made.

8.7 Sample Preservation and Handling

8.7.1 Samples from most sources applicable to this method have acceptable holding times using normal handling practices (shipping samples iced, storing in refrigerator at 2°C until analysis). However, forming section stacks and other sources using waste water sprays may be subject to microbial contamination. For these sources, a biocide (quaternary ammonium compound solution) may be added to collected samples to improve sample stability and method ruggedness.

8.7.2 Sample holding time: Samples should be analyzed within 14 days of collection. Samples must be refrigerated/kept cold for the entire period preceding analysis. After the samples have been brought to room temperature for analysis, any analyses needed should be performed on the same day. Repeated cycles of warming the samples to room temperature/refrigerating/rewarming, then analyzing again, etc., have not been investigated in depth to evaluate if analyte levels remain stable for all sources.

8.7.3 Additional studies will be performed to evaluate whether longer sample holding times are feasible for this method.

8.8 Sample Recovery

8.8.1 Preparation:

8.8.1.1 Proper cleanup procedure begins as soon as the probe is removed from the stack at the end of the sampling period. Allow the probe to cool. When the probe can be handled safely, wipe off all external particulate matter near the tip of the probe nozzle and place a cap over the tip to prevent losing or gaining particulate matter. Do not cap the probe tightly while the sampling train is cooling because a vacuum will be created, drawing liquid from the impingers back through the sampling train.

8.8.1.2 Before moving the sampling train to the cleanup site, remove the probe from the sampling train and cap the open outlet, being careful not to lose any condensate that might be present. Remove the umbilical cord from the last impinger and cap the impinger. If a flexible line is used, let any condensed water or liquid drain into the impingers. Cap off any open impinger inlets and outlets. Ground glass stoppers, Teflon ™ caps, or caps of other inert materials may be used to seal all openings.

8.8.1.3 Transfer the probe and impinger assembly to an area that is clean and protected from wind so that the chances of contaminating or losing the sample are minimized.

8.8.1.4 Inspect the train before and during disassembly, and note any abnormal conditions.

8.8.1.5 Save a portion of the washing solution (high purity water) used for cleanup as a blank.

8.8.2 Sample Containers:

8.8.2.1 Container 1: Probe and Impinger Catches. Using a graduated cylinder, measure to the nearest ml, and record the volume of the solution in the first three impingers. Alternatively, the solution may be weighed to the nearest 0.5 g. Include any condensate in the probe in this determination. Transfer the combined impinger solution from the graduated cylinder into the polyethylene bottle. Taking care that dust on the outside of the probe or other exterior surfaces does not get into the sample, clean all surfaces to which the sample is exposed (including the probe nozzle, probe fitting, probe liner, first three impingers, and impinger connectors) with water. Use less than 400 ml for the entire waste (250 ml would be better, if possible). Add the rinse water to the sample container.

8.8.2.1.1 Carefully remove the probe nozzle and rinse the inside surface with water from a wash bottle. Brush with a bristle brush and rinse until the rinse shows no visible particles, after which make a final rinse of the inside surface. Brush and rinse the inside parts of the Swagelok (or equivalent) fitting with water in a similar way.

8.8.2.1.2 Rinse the probe liner with water. While squirting the water into the upper end of the probe, tilt and rotate the probe so that

all inside surfaces will be wetted with water. Let the water drain from the lower end into the sample container. The tester may use a funnel (glass or polyethylene) to aid in transferring the liquid washes to the container. Follow the rinse with a bristle brush. Hold the probe in an inclined position, and squirt water into the upper end as the probe brush is being pushed with a twisting action through the probe. Hold the sample container underneath the lower end of the probe, and catch any water and particulate matter that is brushed from the probe. Run the brush through the probe three times or more. Rinse the brush with water and quantitatively collect these washings in the sample container. After the brushing, make a final rinse of the probe as describe above.

Note: Two people should clean the probe in order to minimize sample losses. Between sampling runs, brushes must be kept clean and free from contamination.

8.8.2.1.3 Rinse the inside surface of each of the first three impingers (and connecting tubing) three separate times. Use a small portion of water for each rinse, and brush each surface to which the sample is exposed with a bristle brush to ensure recovery of fine particulate matter. Make a final rinse of each surface and of the brush, using water.

8.8.2.1.4 After all water washing and particulate matter have been collected in the sample container, tighten the lid so the sample will not leak out when the container is shipped to the laboratory. Mark the height of the fluid level to determine whether leakage occurs during transport. Label the container clearly to identify its contents.

8.8.2.1.5 If the first two impingers are to be analyzed separately to check for breakthrough, separate the contents and rinses of the two impingers into individual containers. Care must be taken to avoid physical carryover from the first impinger to the second. Any physical carryover of collected moisture into the second impinger will invalidate a breakthrough assessment.

8.8.2.2 Container 2: Sample Blank. Prepare a blank by using a polyethylene container and adding a volume of water equal to the total volume in Container 1. Process the blank in the same manner as Container 1.

8.8.2.3 Container 3: Silica Gel. Note the color of the indicating silica gel to determine whether it has been completely spent and make a notation of its condition. The impinger containing the silica gel may be used as a sample transport container with both ends sealed with tightly fitting caps or plugs. Ground-glass stoppers or Teflon™ caps maybe used. The silica gel impinger should then be labeled, covered with aluminum foil, and packaged on ice for transport to the laboratory. If the silica gel is removed from the impinger, the tester may use a funnel to pour the silica gel and a rubber policeman to remove the silica gel from the impinger. It is not necessary to remove the small amount of dust particles that may adhere to the impinger wall and are difficult to remove. Since the gain in weight is to be used for moisture calculations, do not use water or other liquids to transfer the silica gel. If a balance is available in the field, the spent silica gel (or silica gel plus impinger) may be weighed to the nearest 0.5 g.

8.8.2.4 Sample containers should be placed in a cooler, cooled by (although not in contact with) ice. Putting sample bottles in Zip-Lock™ bags can aid in maintaining the integrity of the sample labels. Sample containers should be placed vertically to avoid leakage during shipment. Samples should be cooled during shipment so they will be received cold at the laboratory. It is critical that samples be chilled immediately after recovery. If the source is susceptible to microbial contamination from wash water (e.g. forming section stack), add biocide as directed in section 8.2.5.

8.8.2.5 A quaternary ammonium compound can be used as a biocide to stabilize samples against microbial degradation following collection. Using the stock quaternary ammonium compound (QAC) solution; add 2.5 ml QAC solution for every 100 ml of recovered sample volume (estimate of volume is satisfactory) immediately after collection. The total volume of QAC solution must be accurately known and recorded, to correct for any dilution caused by the QAC solution addition.

8.8.3 Sample Preparation for Analysis 8.8.3.1 The sample should be refrigerated if the analysis will not be performed on the day of sampling. Allow the sample to warm at room temperature for about two hours (if it has been refrigerated) prior to analyzing.

8.8.3.2 Analyze the sample by the pararosaniline method, as described in Section 11. If the color-developed sample has an absorbance above the highest standard, a suitable dilution in high purity water should be prepared and analyzed.

9.0 *Quality Control*

9.1 Sampling: See EPA Manual 600/4–77–02b for Method 5 quality control.

9.2 Analysis: The quality assurance program required for this method includes the analysis of the field and method blanks, and procedure validations. The positive identification and quantitation of formaldehyde are dependent on the integrity of the samples received and the precision and accuracy of the analytical methodology. Quality assurance procedures for this method are designed to monitor the performance of the analytical methodology and to provide the required information to take corrective action if problems are observed in laboratory operations or in field sampling activities.

9.2.1 Field Blanks: Field blanks must be submitted with the samples collected at each sampling site. The field blanks include the sample bottles containing aliquots of sample recover water, and water reagent. At a minimum, one complete sampling train will be assembled in the field staging area, taken to the sampling area, and leak-checked at the beginning and end of the testing (or for the same total number of times as the actual sampling train). The probe of the blank train must be heated during the sample test. The train will be recovered as if it were an actual test sample. No gaseous sample will be passed through the blank sampling train.

9.2.2 Blank Correction: The field blank formaldehyde concentrations will be subtracted from the appropriate sample formaldehyde concentrations. Blank formaldehyde concentrations above 0.25 μg/ml should be considered suspect, and subtraction from the sample formaldehyde concentrations should be performed in a manner acceptable to the Administrator.

9.2.3 Method Blanks: A method blank must be prepared for each set of analytical operations, to evaluate contamination and artifacts that can be derived from glassware, reagents, and sample handling in the laboratory.

10 *Calibration*

10.1 Probe Nozzle: Probe nozzles shall be calibrated before their initial use in the field. Using a micrometer, measure the inside diameter of the nozzle to the nearest 0.025 mm (0.001 in). Make measurements at three separate places across the diameter and obtain the average of the measurements. The difference between the high and low numbers shall not exceed 0.1 mm (0.004 in). When the nozzle becomes nicked or corroded, it shall be repaired and calibrated, or replaced with a calibrated nozzle before use. Each nozzle must be permanently and uniquely identified.

10.2 Pitot Tube: The Type S pitot tube assembly shall be calibrated according to the procedure outlined in Section 4 of EPA Method 2, or assigned a nominal coefficient of 0.84 if it is not visibly nicked or corroded and if it meets design and intercomponent spacing specifications.

10.3 Metering System

10.3.1 Before its initial use in the field, the metering system shall be calibrated according to the procedure outlined in APTD–0576. Instead of physically adjusting the dry-gas meter dial readings to correspond to the wet-test meter readings, calibration factors may be used to correct the gas meter dial readings mathematically to the proper values. Before calibrating the metering system, it is suggested that a leak-check be conducted. For metering systems having diaphragm pumps, the normal leak-check procedure will not delete leakages with the pump. For these cases, the following leak-check procedure will apply: Make a ten-minute calibration run at 0.00057 m^3/min (0.02 cfm). At the end of the run, take the difference of the measured wet-test and dry-gas meter volumes and divide the difference by 10 to get the leak rate. The leak rate should not exceed 0.00057 m^3/min (0.02 cfm).

10.3.2 After each field use, check the calibration of the metering system by performing three calibration runs at a single intermediate orifice setting (based on the previous field test). Set the vacuum at the maximum value reached during the test series. To adjust the vacuum, insert a valve between the wet-test meter and the inlet of the metering system. Calculate the average value of the calibration factor. If the calibration has changed by more than 5 percent, recalibrate the meter over the full range of orifice settings, as outlined in APTD–0576.

10.3.3 Leak-check of metering system: The portion of the sampling train from the pump to the orifice meter (see Figure 1)

should be leak-checked prior to initial use and after each shipment. Leakage after the pump will result in less volume being recorded than is actually sampled. Use the following procedure: Close the main valve on the meter box. Insert a one-hole rubber stopper with rubber tubing attached into the orifice exhaust pipe. Disconnect and vent the low side of the orifice manometer. Close off the low side orifice tap. Pressurize the system to 13–18 cm (5–7 in) water column by blowing into the rubber tubing. Pinch off the tubing and observe the manometer for 1 min. A loss of pressure on the manometer indicates a leak in the meter box. Leaks must be corrected.

Note: If the dry-gas meter coefficient values obtained before and after a test series differ by >5 percent, either the test series must be voided or calculations for test series must be performed using whichever meter coefficient value (i.e., before or after) gives the lower value of total sample volume.

10.4 Probe Heater: The probe heating system must be calibrated before its initial use in the field according to the procedure outlined in APTD–0576. Probes constructed according to APTD–0581 need not be calibrated if the calibration curves in APTD–0576 are used.

10.5 Temperature gauges: Use the procedure in section 4.3 of USEPA Method 2 to calibrate in-stack temperature gauges. Dial thermometers such as are used for the dry gas meter and condenser outlet, shall be calibrated against mercury-in-glass thermometers.

10.6 Barometer: Adjust the barometer initially and before each test series to agree to within ±2.5 mm Hg (0.1 in Hg) of the mercury barometer. Alternately, if a National Weather Service Station (NWSS) is located at the same altitude above sea level as the test site, the barometric pressure reported by the NWSS may be used.

10.7 Balance: Calibrate the balance before each test series, using Class S standard weights. The weights must be within ±0.5 percent of the standards, or the balance must be adjusted to meet these limits.

11.0 *Procedure for Analysis.*

The working formaldehyde standards (0.25, 0.50, 1.0, 2.0, and 3.0 µg/ml) are analyzed and a calibration curve is calculated for each day's analysis. The standards should be analyzed first to ensure that the method is working properly prior to analyzing the samples. In addition, a sample of the high-purity water should also be analyzed and used as a ''0'' formaldehyde standard.

The procedure for analysis of samples and standards is identical: Using the pipet set to 2.50 ml, pipet 2.50 ml of the solution to be analyzed into a polystyrene cuvette. Using the 250 µl pipet, pipet 250 µl of the pararosaniline reagent solution into the cuvette. Seal the top of the cuvette with a Parafilm square and shake at least 30 seconds to ensure the solution in the cuvette is well-mixed. Peel back a corner of the Parafilm so the next reagent can be added. Using the 250 µl pipet, pipet 250 µl of the sodium sulfite reagent solution into the cuvette. Reseal the cuvette with the Parafilm, and again shake for about 30 seconds to mix the solution in the cuvette. Record the time of addition of the sodium sulfite and let the color develop at room temperature for 60 minutes. Set the spectrophotometer to 570 nm and set to read in Absorbance Units. The spectrophotometer should be equipped with a holder for the 1-cm pathlength cuvettes. Place cuvette(s) containing high-purity water in the spectrophotometer and adjust to read 0.000 AU.

After the 60 minutes color development period, read the standard and samples in the spectrophotometer. Record the absorbance reading for each cuvette. The calibration curve is calculated by linear regression, with the formaldehyde concentration as the ''x'' coordinate of the pair, and the absorbance reading as the ''y'' coordinate. The procedure is very reproducible, and typically will yield values similar to these for the calibration curve:

Correlation Coefficient: 0.9999
Slope: 0.50
Y-Intercept: 0.090

The formaldehyde concentration of the samples can be found by using the trend-line feature of the calculator or computer program used for the linear regression. For example, the TI–55 calculators use the ''X'' key (this gives the predicted formaldehyde concentration for the value of the absorbance you key in for the sample). Multiply the formaldehyde concentration from the sample by the dilution factor, if any, for the sample to give the formaldehyde concentration of the original, undiluted, sample (units will be micrograms/ml).

11.1 Notes on the Pararosaniline Procedure

11.1.1 The pararosaniline method is temperature-sensitive. However, the small fluctuations typical of a laboratory will not significantly affect the results.

11.1.2 The calibration curve is linear to beyond 4 ''µg/ml'' formaldehyde, however, a research-grade spectrophotometer is required to reproducibly read the high absorbance values. Consult your instrument manual to evaluate the capability of the spectrophotometer.

11.1.3 The quality of the laboratory water used to prepare standards and make dilutions is critical. It is important that the cautions given in the Reagents section be observed. This procedure allows quantitation of formaldehyde at very low levels, and thus it is imperative to avoid contamination from other sources of formaldehyde and to exercise the degree of care required for trace analyses.

11.1.4 The analyst should become familiar with the operation of the Oxford or equivalent pipettors before using them for an analysis. Follow the instructions of the manufacturer; one can pipet water into a tared container on any analytical balance to check pipet accuracy and precision. This will also establish if the proper technique is being used. Always use a new tip for each pipetting operation.

11.1.5 This procedure follows the recommendations of ASTM Standard Guide D 3614, reading all solutions versus water in the reference cell. This allows the absorbance of the blank to be tracked on a daily basis. Refer to ASTM D 3614 for more information.

12.0 *Calculations*

Carry out calculations, retaining at least one extra decimal figure beyond that of the acquired data. Round off figures after final calculations.

12.1 Calculations of Total Formaldehyde

12.1.1 To determine the total formaldehyde in mg, use the following equation if biocide was not used:

Total mg formaldehyde=

$$C_d \times V \times DF \times 0.001 \text{ mg/µg}$$

Where:

C_d = measured conc. formaldehyde, µg/ml
V = total volume of stack sample, ml
DF = dilution factor

12.1.2 To determine the total formaldehyde in mg, use the following equation if biocide was used:

Total mg formaldehyde=

$$\frac{C_d \times V}{(V - B) \times DF \times 0.001 \text{ mg/µg}}$$

Where:

C_d = measured conc. formaldehyde, µg/ml
V = total volume of stack sample, ml
B = total volume of biocide added to sample, ml
DF = dilution factor

12.2 Formaldehyde concentration (mg/m^3) in stack gas. Determine the formaldehyde concentration (mg/m^3) in the stack gas using the following equation: Formaldehyde concentration (mg/m^3) =

$$\frac{K \times [\text{total formaldehyde, mg}]}{V_m(\text{std})}$$

Where:

K = 35.31 cu ft/m^3 for V_m(std) in English units, or
K = 1.00 m^3/m^3 for V_m(std) in metric units
V_m(std) = volume of gas sample measured by a dry gas meter, corrected to standard conditions, dscm (dscf)

12.3 Average dry gas meter temperature and average orifice pressure drop are obtained from the data sheet.

12.4 Dry Gas Volume: Calculate V_m(std) and adjust for leakage, if necessary, using the equation in Section 6.3 of EPA Method 5, 40 CFR part 60, appendix A.

12.5 Volume of Water Vapor and Moisture Content: Calculated the volume of water vapor and moisture content from equations 5–2 and 5–3 of EPA Method 5.

13.0 *Method Performance*

The precision of this method is estimated to be better than ±5 percent, expressed as ± the percent relative standard deviation.

14.0 *Pollution Prevention.* (Reserved)

15.0 *Waste Management.* (Reserved)

16.0 *References*

R.R. Miksch, et al., Analytical Chemistry, November 1981, 53 pp. 2118–2123.
J.F. Walker, Formaldehyde, Third Edition, 1964.
US EPA 40 CFR, part 60, Appendix A, Test Methods 1–5

Method 318—Extractive FTIR Method for the Measurement of Emissions From the Mineral Wool and Wool Fiberglass Industries

1.0 *Scope and Application*

This method has been validated and approved for mineral wool and wool fiberglass sources. This method may not be applied to other source categories without validation and approval by the Administrator according to the procedures in Test Method 301, 40 CFR part 63, appendix A. For sources seeking to apply FTIR to other source categories, Test Method 320 (40 CFR part 63, appendix A) may be utilized.

1.1 Scope. The analytes measured by this method and their CAS numbers are:

Carbon Monoxide 630–08–0
Carbonyl Sulfide 463–58–1
Formaldehyde 50–00–0
Methanol 1455–13–6
Phenol 108–95–2

1.2 Applicability

1.2.1 This method is applicable for the determination of formaldehyde, phenol, methanol, carbonyl sulfide (COS) and carbon monoxide (CO) concentrations in controlled and uncontrolled emissions from manufacturing processes using phenolic resins. The compounds are analyzed in the mid-infrared spectral region (about 400 to 4000 cm − 1 or 25 to 2.5 μm). Suggested analytical regions are given below (Table 1). Slight deviations from these recommended regions may be necessary due to variations in moisture content and ammonia concentration from source to source.

TABLE 1.—EXAMPLE ANALYTICAL REGIONS

Compound	Analytical region (cm − 1) FL_m − FU_m	Potential interferants
Formaldehyde	2840.93 − 2679.83	Water, Methane.
Phenol	1231.32 − 1131.47	Water, Ammonia, Methane.
Methanol	1041.56 − 1019.95	Water, Ammonia.
COS[a]	2028.4 − 2091.9	Water, CO_2, CO.
CO[a]	2092.1 − 2191.8	Water, CO_2, COS.

[a] Suggested analytical regions assume about 15 percent moisture and CO_2, and that COS and CO have about the same absorbance (in the range of 10 to 50 ppm). If CO and COS are hundreds of ppm or higher, then CO_2 and moisture interference is reduced. If CO or COS is present at high concentration and the other at low concentration, then a shorter cell pathlength may be necessary to measure the high concentration component.

1.2.2 This method does not apply when: (a) Polymerization of formaldehyde occurs, (b) moisture condenses in either the sampling system or the instrumentation, and (c) when moisture content of the gas stream is so high relative to the analyte concentrations that it causes severe spectral interference.

1.3 Method Range and Sensitivity

1.3.1 The analytical range is a function of instrumental design and composition of the gas stream. Theoretical detection limits depend, in part, on (a) the absorption coefficient of the compound in the analytical frequency region, (b) the spectral resolution, (c) interferometer sampling time, (d) detector sensitivity and response, and (e) absorption pathlength.

1.3.2 Practically, there is no upper limit to the range. The practical lower detection limit is usually higher than the theoretical value, and depends on (a) moisture content of the flue gas, (b) presence of interferants, and (c) losses in the sampling system. In general, a 22 meter pathlength cell in a suitable sampling system can achieve practical detection limits of 1.5 ppm for three compounds (formaldehyde, phenol, and methanol) at moisture levels up to 15 percent by volume. Sources with uncontrolled emissions of CO and COS may require a 4 meter pathlength cell due to high concentration levels. For these two compounds, make sure absorbance of highest concentration component is <1.0.

1.4 Data Quality Objectives

1.4.1 In designing or configuring the system, the analyst first sets the data quality objectives, i.e., the desired lower detection limit (DL_i) and the desired analytical uncertainty (AU_i) for each compound. The instrumental parameters (factors b, c, d, and e in Section 1.3.1) are then chosen to meet these requirements, using Appendix D of the FTIR Protocol.

1.4.2 Data quality for each application is determined, in part, by measuring the RMS (Root Mean Square) noise level in each analytical spectral region (Appendix C of the FTIR Protocol). The RMS noise is defined as the RMSD (Root Mean Square Deviation) of the absorbance values in an analytical region from the mean absorbance value of the region. Appendix D of the FTIR Protocol defines the MAU_{im} (minimum analyte uncertainty of the ith analyte in the mth analytical region). The MAU is the minimum analyte concentration for which the analytical uncertainty limit (AU_i) can be maintained: if the measured analyte concentration is less than MAU_i, then data quality is unacceptable. Table 2 gives some example DL and AU values along with calculated areas and MAU values using the protocol procedures.

TABLE 2.—EXAMPLE PRE-TEST PROTOCOL CALCULATIONS

Protocol value	Form	Phenol	Methanol	Protocol appendix
Reference concentration[a] (ppm-meters)/K	3.016	3.017	5.064	
Reference Band Area	8.2544	16.6417	4.9416	B
DL (ppm-meters)/K	0.1117	0.1117	0.1117	B
AU	0.2	0.2	0.2	B
CL	0.02234	0.02234	0.02234	B
FL	2679.83	1131.47	1019.95	B
FU	2840.93	1231.32	1041.56	B
FC	2760.38	1181.395	1030.755	B
AAI (ppm-meters)/K	0.18440	0.01201	0.00132	B
RMSD	2.28E–03	1.21E–03	1.07E–03	C
MAU (ppm-meters)/K	4.45E–02	7.26E–03	4.68E–03	D
MAU (ppm at 22)	0.0797	0.0130	0.0084	D

[a] Concentration units are: ppm concentration of the reference sample (ASC), times the path length of the FTIR cell used when the reference spectrum was measured (meters), divided by the absolute temperature of the reference sample in Kelvin (K), or (ppm-meters)/K.

2.0 *Summary of Method*

2.1 Principle

2.1.1 Molecules are composed of chemically bonded atoms, which are in constant motion. The atomic motions result in bond deformations (bond stretching and bond-angle bending). The number of fundamental (or independent) vibrational motions depends on the number of atoms (N) in the molecule. At typical testing temperatures, most molecules are in the ground-state vibrational state for most of their fundamental vibrational motions. A molecule can undergo a transition from its ground state (for a particular vibration) to the first excited state by absorbing a quantum of light at a frequency characteristic of the molecule and the molecular motion. Molecules also undergo rotational transitions by absorbing energies in the far-infrared or microwave spectral regions. Rotational transition absorbencies are superimposed on the vibrational absorbencies to give a characteristic shape to each rotational-vibrational absorbance ''band.''

2.1.2 Most molecules exhibit more than one absorbance band in several frequency regions to produce an infrared spectrum (a characteristic pattern of bands or a ''fingerprint'') that is unique to each molecule. The infrared spectrum of a molecule depends on its structure (bond lengths, bond angles, bond strengths, and atomic masses). Even small differences in structure can produce significantly different spectra.

2.1.3 Spectral band intensities vary with the concentration of the absorbing compound. Within constraints, the relationship between absorbance and sample concentration is linear. Sample spectra are compared to reference spectra to determine the species and their concentrations.

2.2 Sampling and Analysis

2.2.1 Flue gas is continuously extracted from the source, and the gas or a portion of the gas is conveyed to the FTIR gas cell, where a spectrum of the flue gas is recorded. Absorbance band intensities are related to sample concentrations by Beer's Law. Where:

$$A_v = \sum a_i b c_i \qquad (6)$$

A_v = absorbance of the ith component at the given frequency, ν.
a = absorption coefficient of the ith component at the frequency, ν.
b = path length of the cell.
c = concentration of the ith compound in the sample at frequency ν.

2.2.2 After identifying a compound from the infrared spectrum, its concentration is determined by comparing band intensities in the sample spectrum to band intensities in ''reference spectra'' of the formaldehyde, phenol, methanol, COS and CO. These reference spectra are available in a permanent soft copy from the EPA spectral library on the EMTIC bulletin board. The source may also prepare reference spectra according to Section 4.5 of the FTIR Protocol.

Note: Reference spectra not prepared according to the FTIR Protocol are not acceptable for use in this test method. Documentation detailing the FTIR Protocol steps used in preparing any non-EPA reference spectra shall be included in each test report submitted by the source.

2.3 Operator Requirements. The analyst must have some knowledge of source sampling and of infrared spectral patterns to operate the sampling system and to choose a suitable instrument configuration. The analyst should also understand FTIR instrument operation well enough to choose an instrument configuration consistent with the data quality objectives.

3.0 *Definitions*

See Appendix A of the *FTIR* Protocol.

4.0 *Interferences*

4.1 Analytical (or Spectral) Interferences. Water vapor. High concentrations of ammonia (hundreds of ppm) may interfere with the analysis of low concentrations of methanol (1 to 5 ppm). For CO, carbon dioxide and water may be interferants. In cases where COS levels are low relative to CO levels, CO and water may be interferants.

4.2 Sampling System Interferences. Water, if it condenses, and ammonia, which reacts with formaldehyde.

5.0 *Safety*

5.1 Formaldehyde is a suspected carcinogen; therefore, exposure to this compound must be limited. Proper monitoring and safety precautions must be practiced in any atmosphere with potentially high concentrations of CO.

5.2 This method may involve sampling at locations having high positive or negative pressures, high temperatures, elevated heights, high concentrations of hazardous or toxic pollutants, or other diverse sampling conditions. It is the responsibility of the tester(s) to ensure proper safety and health practices, and to determine the applicability of regulatory limitations before performing this test method.

6.0 *Equipment and Supplies*

The equipment and supplies are based on the schematic of a sampling train shown in Figure 1. Either the evacuated or purged sampling technique may be used with this sampling train. Alternatives may be used, provided that the data quality objectives of this method are met.

6.1 Sampling Probe. Glass, stainless steel, or other appropriate material of sufficient length and physical integrity to sustain heating, prevent adsorption of analytes, and to reach gas sampling point.

6.2 Particulate Filters. A glass wool plug (optional) inserted at the probe tip (for large particulate removal) and a filter rated at 1-micron (e.g., Balston™) for fine particulate removal, placed immediately after the heated probe.

6.3 Sampling Line/Heating System. Heated (maintained at 250 ± 25 degrees F) stainless steel, Teflon™, or other inert material that does not adsorb the analytes, to transport the sample to analytical system.

6.4 Stainless Steel Tubing. Type 316, e.g., ⅜ in. diameter, and appropriate length for heated connections.

6.5 Gas Regulators. Appropriate for individual gas cylinders.

BILLING CODE 6560–50–P

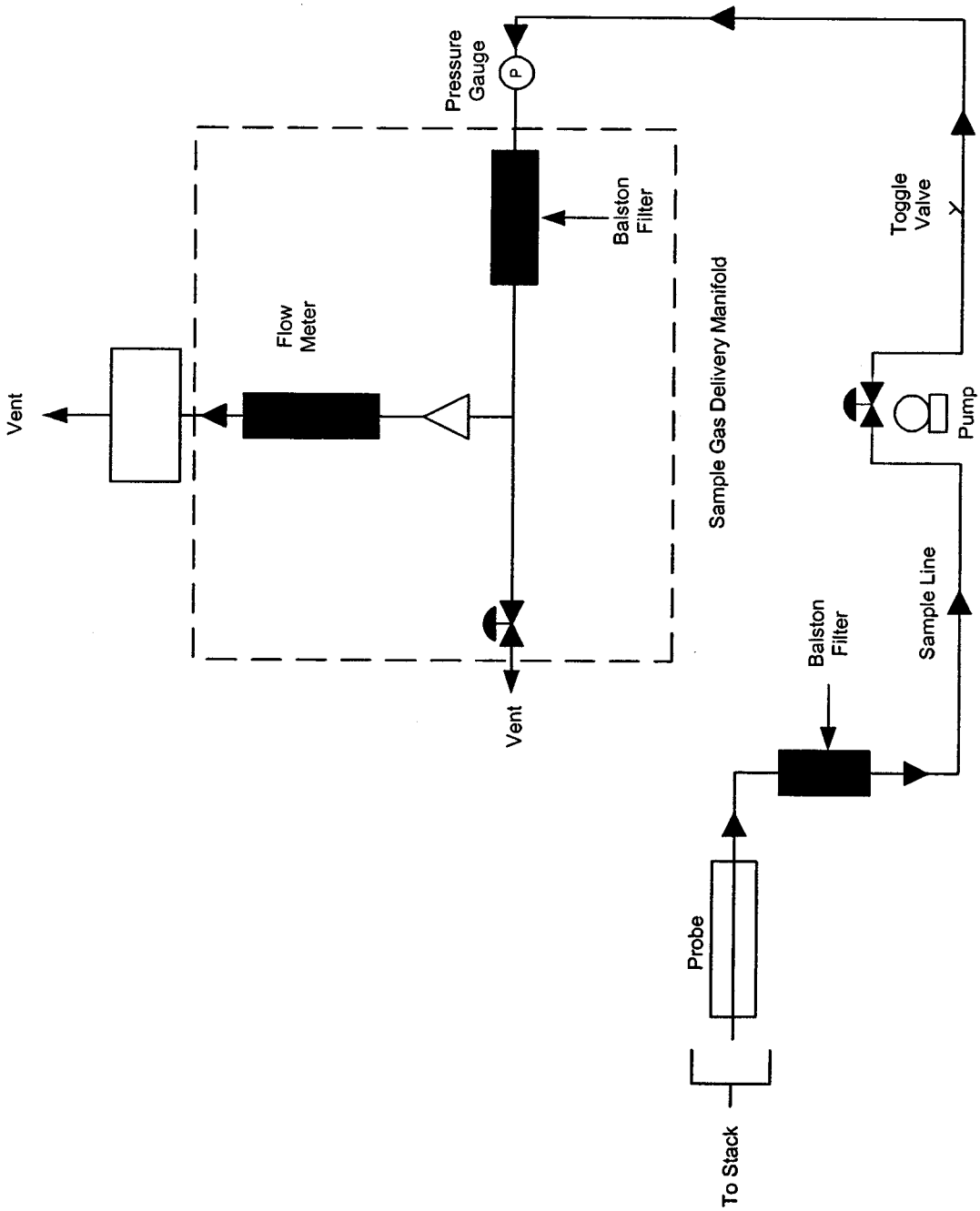

Figure 1. The extractive FTIR sampling system.

BILLING CODE 6560–50–C

6.6 Teflon™ Tubing. Diameter (e.g., ⅜ in.) and length suitable to connect cylinder regulators.

6.7 Sample Pump. A leak-free pump (e.g., KNF™), with by-pass valve, capable of pulling sample through entire sampling system at a rate of about 10 to 20 L/min. If placed before the analytical system, heat the pump and use a pump fabricated from materials non-reactive to the target pollutants. If the pump is located after the instrument, systematically record the sample pressure in the gas cell.

6.8 Gas Sample Manifold. A heated manifold that diverts part of the sample stream to the analyzer, and the rest to the by-pass discharge vent or other analytical instrumentation.

6.9 Rotameter. A calibrated 0 to 20 L/min range rotameter.

6.10 FTIR Analytical System. Spectrometer and detector, capable of measuring formaldehyde, phenol, methanol, COS and CO to the predetermined minimum detectable level. The system shall include a personal computer with compatible software that provides real-time updates of the spectral profile during sample collection and spectral collection.

6.11 FTIR Cell Pump. Required for the evacuated sampling technique, capable of evacuating the FTIR cell volume within 2 minutes. The FTIR cell pump should allow the operator to obtain at least 8 sample spectra in 1 hour.

6.12 Absolute Pressure Gauge. Heatable and capable of measuring pressure from 0 to 1000 mmHg to within ±2.5 mmHg (e.g., Baratron™).

6.13 Temperature Gauge. Capable of measuring the cell temperature to within ±2°C.

7.0 *Reagents and Standards*

7.1 Ethylene (Calibration Transfer Standard). Obtain NIST traceable (or Protocol) cylinder gas.

7.2 Nitrogen. Ultra high purity (UHP) grade.

7.3 Reference Spectra. Obtain reference spectra for the target pollutants at concentrations that bracket (in ppm-meter/K) the emission source levels. Also, obtain reference spectra for SF_6 and ethylene. Suitable concentrations are 0.0112 to 0.112 (ppm-meter)/K for SF_6 and 5.61 (ppm-meter)/K or less for ethylene. The reference spectra shall meet the criteria for acceptance outlined in Section 2.2.2. The optical density (ppm-meters/K) of the reference spectrum must match the optical density of the sample spectrum within (less than) 25 percent.

8.0 *Sample Collection, Preservation, and Storage*

Sampling should be performed in the following sequence: Collect background, collect CTS spectrum, collect samples, collect post-test CTS spectrum, verify that two copies of all data were stored on separate computer media.

8.1 Pretest Preparations and Evaluations. Using the procedure in Section 4.0 of the *FTIR Protocol*, determine the optimum sampling system configuration for sampling the target pollutants. Table 2 gives some example values for AU, DL, and MAU. Based on a study (Reference 1), an FTIR system using 1 cm^{-1} resolution, 22 meter path length, and a broad band MCT detector was suitable for meeting the requirements in Table 2. Other factors that must be determined are:

a. Test requirements: AU_i, $CMAX_i$, DL_i, OFU_i, and t_{AN} for each.

b. Interferants: See Table 1.

c. Sampling system: L_S', P_{min}, P_S', T_S', t_{SS}, V_{SS}; fractional error, MIL.

d. Analytical regions: 1 through N_m, FL_m, FC_m, and FU_m, plus interferants, FFU_m, FFL_m, wavenumber range FNU to FNL. See Tables 1 and 2.

8.1.1 If necessary, sample and acquire an initial spectrum. Then determine the proper operational pathlength of the instrument to obtain non-saturated absorbances of the target analytes.

8.1.2 Set up the sampling train as shown in Figure 1.

8.2 Sampling System Leak-check. Leak-check from the probe tip to pump outlet as follows: Connect a 0- to 250-mL/min rate meter (rotameter or bubble meter) to the outlet of the pump. Close off the inlet to the probe, and note the leakage rate. The leakage rate shall be ≤200 mL/min.

8.3 Analytical System Leak-check.

8.3.1 For the evacuated sample technique, close the valve to the FTIR cell, and evacuate the absorption cell to the minimum absolute pressure P_{min}. Close the valve to the pump, and determine the change in pressure ΔP_v after 2 minutes.

8.3.2 For both the evacuated sample and purging techniques, pressurize the system to about 100 mmHg above atmospheric pressure. Isolate the pump and determine the change in pressure ΔP_p after 2 minutes.

8.3.3 Measure the barometric pressure, P_b in mmHg.

8.3.4 Determine the percent leak volume $\%V_L$ for the signal integration time t_{SS} and for ΔP_{max}, i.e., the larger of ΔP_v or ΔP_p, as follows:

$$\%V_L = 50\, t_{SS} \frac{\Delta P_{max}}{P_{SS}} \qquad (2)$$

Where:

50 = 100% divided by the leak-check time of 2 minutes.

8.3.5 Leak volumes in excess of 4 percent of the sample system volume V_{SS} are unacceptable.

8.4 Background Spectrum. Evacuate the gas cell to ≤5 mmHg, and fill with dry nitrogen gas to ambient pressure. Verify that no significant amounts of absorbing species (for example water vapor and CO_2) are present. Collect a background spectrum, using a signal averaging period equal to or greater than the averaging period for the sample spectra. Assign a unique file name to the background spectrum. Store the spectra of the background interferogram and processed single-beam background spectrum on two separate computer media (one is used as the back-up). If continuous sampling will be used during sample collection, collect the background spectrum with nitrogen gas flowing through the cell at the same pressure and temperature as will be used during sampling.

8.5 Pre-Test Calibration Transfer Standard. Evacuate the gas cell to ≤5 mmHg absolute pressure, and fill the FTIR cell to atmospheric pressure with the CTS gas. Or, purge the cell with 10 cell volumes of CTS gas. Record the spectrum. If continuous sampling will be used during sample collection, collect the CTS spectrum with CTS gas flowing through the cell at the same pressure and temperature as will be used during sampling.

8.6 Samples

8.6.1 Evacuated Samples. Evacuate the absorbance cell to ≤5 mmHg absolute pressure. Fill the cell with flue gas to ambient pressure and record the spectrum. Before taking the next sample, evacuate the cell until no further evidence of absorption exists. Repeat this procedure to collect at least 8 separate spectra (samples) in 1 hour.

8.6.2 Purge Sampling. Purge the FTIR cell with 10 cell volumes of flue gas and at least for about 10 minutes. Discontinue the gas cell purge, isolate the cell, and record the sample spectrum and the pressure. Before taking the next sample, purge the cell with 10 cell volumes of flue gas.

8.6.3 Continuous Sampling. Spectra can be collected continuously while the FTIR cell is being purged. The sample integration time, t_{ss}, the sample flow rate through the FTIR gas cell, and the total run time must be chosen so that the collected data consist of at least 10 spectra with each spectrum being of a separate cell volume of flue gas. More spectra can be collected over the run time and the total run time (and number of spectra) can be extended as well.

8.7 Sampling QA, Data Storage and Reporting

8.7.1 Sample integration times should be sufficient to achieve the required signal-to-noise ratios. Obtain an absorbance spectrum by filling the cell with nitrogen. Measure the RMSD in each analytical region in this absorbance spectrum. Verify that the number of scans is sufficient to achieve the target MAU (Table 2).

8.7.2 Identify all sample spectra with unique file names.

8.7.3 Store on two separate computer media a copy of sample interferograms and processed spectra. The data shall be available to the Administrator on request for the length of time specified in the applicable regulation.

8.7.4 For each sample spectrum, document the sampling conditions, the sampling time (while the cell was being filled), the time the spectrum was recorded, the instrumental conditions (path length, temperature, pressure, resolution, integration time), and the spectral file name. Keep a hard copy of these data sheets.

8.8 Signal Transmittance. While sampling, monitor the signal transmittance through the instrumental system. If signal transmittance (relative to the background) drops below 95 percent in any spectral region where the sample does not absorb infrared energy, obtain a new background spectrum.

8.9 Post-run CTS. After each sampling run, record another CTS spectrum.

8.10 Post-test QA

8.10.1 Inspect the sample spectra immediately after the run to verify that the

gas matrix composition was close to the expected (assumed) gas matrix.

8.10.2 Verify that the sampling and instrumental parameters were appropriate for the conditions encountered. For example, if the moisture is much greater than anticipated, it will be necessary to use a shorter path length or dilute the sample.

8.10.3 Compare the pre and post-run CTS spectra. They shall agree to within −5 percent. See FTIR Protocol, Appendix E.

9.0 *Quality Control*

Follow the quality assurance procedures in the method, including the analysis of pre and post-run calibration transfer standards (Sections 8.5 and 8.9) and the post-test quality assurance procedures in Section 8.10.

10.0 *Calibration and Standardization*

10.1 Signal-to-Noise Ratio (S/N). The S/N shall be sufficient to meet the MAU in each analytical region.

10.2 Absorbance Pathlength. Verify the absorbance path length by comparing CTS spectra to reference spectra of the calibration gas(es). See FTIR Protocol, Appendix E.

10.3 Instrument Resolution. Measure the line width of appropriate CTS band(s) and compare to reference CTS spectra to verify instrumental resolution.

10.4 Apodization Function. Choose appropriate apodization function. Determine any appropriate mathematical transformations that are required to correct instrumental errors by measuring the CTS. Any mathematical transformations must be documented and reproducible.

10.5 FTIR Cell Volume. Evacuate the cell to ≤5 mmHg. Measure the initial absolute temperature (T_i) and absolute pressure (P_i). Connect a wet test meter (or a calibrated dry gas meter), and slowly draw room air into the cell. Measure the meter volume (V_m), meter absolute temperature (T_m), and meter absolute pressure (P_m), and the cell final absolute temperature (T_f) and absolute pressure (P_f). Calculate the FTIR cell volume V_{ss}, including that of the connecting tubing, as follows:

$$V_{SS} = \frac{V_m \frac{P_m}{T_m}}{\left[\frac{P_f}{T_f} - \frac{P_i}{T_i}\right]} \qquad (8)$$

As an alternative to the wet test meter/calibrated dry gas meter procedure, measure the inside dimensions of the cell cylinder and calculate its volume.

11.0 *Procedure*

Refer to Sections 4.6–4.11, Sections 5, 6, and 7, and the appendices of the FTIR Protocol.

12.0 *Data Analysis and Calculations*

a. Data analysis is performed using appropriate reference spectra whose concentrations can be verified using CTS spectra. Various analytical programs are available to relate sample absorbance to a concentration standard. Calculated concentrations should be verified by analyzing spectral baselines after mathematically subtracting scaled reference spectra from the sample spectra. A full description of the data analysis and calculations may be found in the FTIR Protocol (Sections 4.0, 5.0, 6.0 and appendices).

b. Correct the calculated concentrations in sample spectra for differences in absorption pathlength between the reference and sample spectra by:

$$C_{corr} = \left[\frac{L_r}{L_s}\right]\left[\frac{T_s}{T_r}\right]C_{calc} \qquad (9)$$

Where:

C_{corr} = The pathlength corrected concentration.

C_{calc} = The initial calculated concentration (output of the Multicomp program designed for the compound).

L_r = The pathlength associated with the reference spectra.

L_s = The pathlength associated with the sample spectra.

T_s = The absolute temperature (K) of the sample gas.

T_r = The absolute gas temperature (K) at which reference spectra were recorded.

13.0 *Reporting and Recordkeeping*

All interferograms used in determining source concentration shall be stored for the period of time required in the applicable regulation. The Administrator has the option of requesting the interferograms recorded during the test in electronic form as part of the test report.

14.0 *Method Performance*

Refer to the FTIR Protocol.

15.0 *Pollution Prevention.* [Reserved]

16.0 *Waste Management*

Laboratory standards prepared from the formaldehyde and phenol are handled according to the instructions in the materials safety data sheets (MSDS).

17.0 *References*

(1) ''Field Validation Test Using Fourier Transform Infrared (FTIR) Spectrometry To Measure Formaldehyde, Phenol and Methanol at a Wool Fiberglass Production Facility.'' Draft. U.S. Environmental Protection Agency Report, Entropy, Inc., EPA Contract No. 68D20163, Work Assignment I–32, December 1994 (docket item II–A–13).

(2) ''Method 301—Field Validation of Pollutant Measurement Methods from Various Waste Media,'' 40 CFR part 63, appendix A.

[FR Doc. 99–12758 Filed 6–11–99; 8:45 am]

BILLING CODE 6560–50–P

GENERAL SERVICES ADMINISTRATION

41 CFR Part 101–47

[FPMR Amendment H–203]

RIN 3090–AG39

Utilization and Disposal of Real Property Appraisal

AGENCY: Office of Governmentwide Policy, GSA.

ACTION: Final rule.

SUMMARY: This rule amends the Federal Property Management Regulations to clarify and strengthen agency responsibilities for conducting appraisals on real property that is available for disposal. It ensures the reliability, integrity, and confidentiality of those appraisals.

EFFECTIVE DATE: June 14, 1999.

FOR FURTHER INFORMATION CONTACT: Mr. John Q. Martin, Director, Redeployment Services Division at (202) 501–0084.

SUPPLEMENTARY INFORMATION:

A. Regulatory Flexibility Act

This final rule is not required to be published in the **Federal Register** for notice and comment; therefore, the Regulatory Flexibility Act does not apply.

B. Executive Order 12866

The General Services Administration (GSA) has determined that this rule is not a significant regulatory action for the purposes of Executive Order 12866 of September 30, 1993.

C. Paperwork Reduction Act

The Paperwork Reduction Act does not apply because the revisions do not impose recordkeeping or information collection requirements, or the collection of information from offerors, contractors, or members of the public which require the approval of the Office of Management and Budget (OMB) under 44 U.S.C. 501 *et seq.*

D. Small Business Regulatory Enforcement Fairness Act

This final rule is also exempt from congressional review prescribed under 5 U.S.C. 801 since it relates solely to agency management and personnel.

List of Subjects in 41 CFR Part 101–47

Administrative practice and procedure, Government property management, Homeless, Surplus Government property.

For the reasons stated in the preamble, 41 CFR part 101–47 is amended as follows:

PART 101–47—UTILIZATION AND DISPOSAL OF REAL PROPERTY

1. The authority citation for part 101–47 is revised to read as follows:

Authority: 40 U.S.C. 486(c).

2. Section 101–47.303–4 is amended by revising paragraph (c) and adding paragraph (d) to read as follows:

§ 101–47.303–4 Appraisal.

* * * * *

(c) The disposal agency shall have the property appraised by experienced and qualified persons familiar with the types of property to be appraised by them. If the property is included in or eligible for inclusion on the National Register of Historic Places, the appraisal should consider the effect of historic covenants on fair market value.

(d) *Appraisal confidentiality.* Appraisals, appraisal reports, appraisal analyses, and other pre-decisional documents obtained in accordance with this subpart are confidential and for the use of authorized personnel of Government agencies having a need for such information. Further, such information shall not be divulged prior to the delivery and acceptance of the deed. Any person engaged to collect or evaluate information pursuant to this paragraph shall certify that there is no interest, direct or indirect, in the property which would conflict in any manner with the preparation and submission of an impartial appraisal report.

Dated: April 20, 1999.

David J. Barram,

Administrator of General Services.

[FR Doc. 99–15024 Filed 6–11–99; 8:45 am]

BILLING CODE 6820–23–P

DEPARTMENT OF DEFENSE

48 CFR Part 207

[DFARS Case 99–D012]

Defense Federal Acquisition Regulation Supplement; Contract Actions for Leased Equipment

AGENCY: Department of Defense (DoD).

ACTION: Final rule.

SUMMARY: The Director of Defense Procurement has issued a final rule amending the Defense Federal Acquisition Regulation Supplement (DFARS) to add guidance pertaining to funding of contract actions for leased equipment. The guidance emphasizes that capital leases are essentially installment purchases of property and, therefore, must use procurement funding.

EFFECTIVE DATE: June 14, 1999.

FOR FURTHER INFORMATION CONTACT: Mr. Michael Pelkey, Defense Acquisition Regulations Council, PDUSD (A&T) DP (DAR), IMD 3D139, 3062 Defense Pentagon, Washington, DC 20301–3062. Telephone (703) 602–0131; telefax (703) 602–0350. Please cite DFARS Case 99–D012.

SUPPLEMENTARY INFORMATION:

A. Background

This final rule adds a new section at DFARS 207.471 to address funding of contract actions for leased equipment. The new text provides a reference to DoD Financial Management Regulation 7000.14–R and specifies that procurement funds must be used for capital leases.

This rule was not subject to Office of Management and Budget review under Executive Order 12866, dated September 30, 1993.

B. Regulatory Flexibility Act

This final rule does not constitute a significant revision within the meaning of FAR 1.501 and Public Law 98–577 and publication for public comment is not required. However, comments from small entities concerning the affected DFARS subpart will be considered in accordance with 5 U.S.C. 610. Such comments should cite DFARS Case 99–D012.

C. Paperwork Reduction Act

The Paperwork Reduction Act does not apply because the rule does not impose any information collection requirements that require the approval of the Office of Management and Budget under 44 U.S.C. 3501, *et seq.*

List of Subjects in 48 CFR Part 207

Government procurement.

Michele P. Peterson,

Executive Editor, Defense Acquisition Regulations Council.

Therefore, 48 CFR Part 207 is amended as follows:

1. The authority citation for 48 CFR Part 207 continues to read as follows:

Authority: 41 U.S.C. 421 and 48 CFR Chapter 1.

PART 207—ACQUISITION PLANNING

2. Section 207.471 is added to read as follows:

207.471 Funding requirements.

(a) Fund leases in accordance with DoD Financial Management Regulation (FMR) 7000.14–R, Volume 2A, Chapter 1.

(b) DoD leases are either capital leases or operating leases. The difference between the two types of leases is described in FMR 7000.14–R, Volume 4, Chapter 7, Section 070308.

(c) Capital leases are essentially installment purchases of property. Use procurement funds for capital leases.

[FR Doc. 99–15029 Filed 6–11–99; 8:45 am]

BILLING CODE 5000–04–M

DEPARTMENT OF DEFENSE

48 CFR Part 209

[DFARS Case 98–D304]

Defense Federal Acquisition Regulation Supplement; Congressional Medal of Honor

AGENCY: Department of Defense (DoD).

ACTION: Interim rule with request for comments.

SUMMARY: The Director of Defense Procurement has issued an interim rule amending the Defense Federal Acquisition Regulation Supplement (DFARS) to implement Section 8118 of the National Defense Appropriations Act for Fiscal Year 1999. Section 8118 prohibits the award of a contract to, extension of a contract with, or approval of the award of a subcontract to any entity that, within the past 15 years, has been convicted of the unlawful manufacture or sale of the Congressional Medal of Honor.

DATES: *Effective date:* June 14, 1999.

Comment date: Comments on the interim rule should be submitted in writing to the address shown below on or before August 13, 1999, to be considered in the formation of the final rule.

ADDRESSES: Interested parties should submit written comments to: Defense Acquisition Regulations Council, Attn: Ms. Amy Williams, PDUSD(A&T)DP(DAR), IMD 3D139, 3062 Defense Pentagon, Washington, DC 20301–3062. Telefax (703) 602–0350.

E-mail comments submitted over the Internet should be addressed to: dfars@acq.osd.mil.

Please cite DFARS Case 98–D304 in all correspondence related to this rule. E-mail comments should cite DFARS Case 98–D304 in the subject line.

FOR FURTHER INFORMATION CONTACT: Ms. Amy Williams, (703) 602–0131.

SUPPLEMENTARY INFORMATION:

A. Background

This interim rule adds a new section at DFARS 209.471 to implement Section 8118 of the National Defense

Appropriations Act for Fiscal Year 1999 (Public Law 105–262). Section 8118 prohibits the award of a contract to, extension of a contract with, or approval of the award of a subcontract to any entity that, within the past 15 years, has been convicted under 18 U.S.C. 704 of the unlawful manufacture or sale of the Congressional Medal of Honor.

This rule was not subject to Office of Management and Budget review under Executive Order 12866, dated September 30, 1993.

B. Regulatory Flexibility Act

This interim rule is not expected to have a significant economic impact on a substantial number of small entities within the meaning of the Regulatory Flexibility Act, 5 U.S.C. 601, *et seq.*, because the rule applies only to entities that have been convicted of the unlawful manufacture or sale of the Congressional Medal of Honor. Therefore, an initial regulatory flexibility analysis has not been performed. Comments are invited from small businesses and other interested parties. Comments from small entities concerning the affected DFARS subpart also will be considered in accordance with 5 U.S.C. 610. Such comments should be submitted separately and should cite DFARS Case 98–D304 in correspondence.

C. Paperwork Reduction Act

The Paperwork Reduction Act does not apply because the rule does not impose any information collection requirements that require the approval of the Office of Management and Budget under 44 U.S.C. 3501, *et seq.*

D. Determination To Issue an Interim Rule

A determination has been made under the authority of the Secretary of Defense that urgent and compelling reasons exist to publish this interim rule prior to affording the public an opportunity to comment. This interim rule implements Section 8118 of the National Defense Appropriations Act for Fiscal Year 1999 Pub. L. 105–262). Section 8118 became effective on October 17, 1998. Comments received in response to this interim rule will be considered in the formation of the final rule.

List of Subjects in 48 CFR Part 209

Government procurement.

Michele P. Peterson,

Executive Editor, Defense Acquisition Regulations Council.

Therefore, 48 CFR Part 209 is amended as follows:

1. The authority citation for 48 CFR Part 209 continues to read as follows:

Authority: 41 U.S.C. 421 and 48 CFR Chapter 1.

PART 209—CONTRACTOR QUALIFICATIONS

2. Section 209.471 is added to read as follows:

209.471 Congressional Medal of Honor

In accordance with Section 8118 of Pub. L. 105–262, do not award a contract to, extend a contract with, or approve the award of a subcontract to any entity that, within the preceding 15 years, has been convicted under 18 U.S.C. 704 of the unlawful manufacture or sale of the Congressional Medal of Honor. Any entity so convicted will be listed as ineligible on the List of Parties Excluded from Federal Procurement and Nonprocurement Programs published by the General Services Administration.

[FR Doc 99–15030 Filed 6–11–99; 8:45 am]

BILLING CODE 5000–04–M

DEPARTMENT OF COMMERCE

National Oceanic and Atmospheric Administration

50 CFR Part 679

[Docket No. 990304062–9062–01; I.D. 060899C]

Fisheries of the Exclusive Economic Zone Off Alaska; Pollock in Statistical Area 630

AGENCY: National Marine Fisheries Service (NMFS), National Oceanic and Atmospheric Administration (NOAA), Commerce.

ACTION: Closure.

SUMMARY: NMFS is prohibiting directed fishing for pollock in Statistical Area 630 in the Gulf of Alaska (GOA). This action is necessary to prevent exceeding the second seasonal apportionment of pollock total allowable catch (TAC) in this area.

DATES: Effective 1200 hours, Alaska local time (A.l.t.), June 10, 1999, until 1200 hours, A.l.t., September 1, 1999.

FOR FURTHER INFORMATION CONTACT: Thomas Pearson, 907–486-6919 or tom.pearson@noaa.gov.

SUPPLEMENTARY INFORMATION: NMFS manages the groundfish fishery in the GOA exclusive economic zone according to the Fishery Management Plan for Groundfish of the Gulf of Alaska (FMP) prepared by the North Pacific Fishery Management Council under authority of the Magnuson-Stevens Fishery Conservation and Management Act. Regulations governing fishing by U.S. vessels in accordance with the FMP appear at subpart H of 50 CFR part 600 and 50 CFR part 679.

The second seasonal apportionment of pollock TAC is equal to 20 percent of the annual TAC (§ 679.20(a)(5)(ii)(C)). The Administrator, Alaska Region, NMFS (Regional Administrator), has determined that any amount of unharvested first seasonal apportionment of TAC or any amount of TAC harvested in excess of the first seasonal apportionment shall be proportionately added to or subtracted from subsequent seasonal apportionments throughout the remainder of the fishing year, with the provision that no seasonal apportionment shall exceed 30 percent of the annual TAC (§ 679.20(a)(5)(ii)(C)). This action is consistent with the manner in which underages and/or overages of seasonal apportionments of pollock TAC have been managed in previous years. The pollock TAC in Statistical Area 630 was established by the Final 1999 Harvest Specifications for Groundfish (64 FR 12094, March 11, 1999) as 30,520 metric tons (mt) for the entire 1999 fishing year. In accordance with § 679.20(a)(5)(ii)(C), the second seasonal apportionment of pollock TAC in the Statistical Area 630 is 5,660 mt. This is 444 mt less than the 1999 allocation of 6,104 mt because a 17 percent overage in the previous season's catch has been deducted for this seasonal allowance.

In accordance with § 679.20(d)(1)(i), the Regional Administrator has determined that the second seasonal apportionment of pollock TAC in Statistical Area 630 has been reached. Therefore, the Regional Administrator is establishing a directed fishing allowance of 5,160 mt, and is setting aside the remaining 500 mt as bycatch to support other anticipated groundfish fisheries. In accordance with § 679.20(d)(1)(iii), the Regional Administrator finds that this directed fishing allowance has been reached. Consequently, NMFS is prohibiting directed fishing for pollock in Statistical Area 630.

Maximum retainable bycatch amounts may be found in the regulations at § 679.20(e) and (f).

Classification

This action responds to the second seasonal TAC limitations and other restrictions on the fisheries established in the final 1999 harvest specifications for groundfish in the GOA. It must be implemented immediately to prevent overharvesting the second seasonal apportionment of pollock TAC in Statistical Area 630 of the GOA. A delay

in the effective date is impracticable and contrary to the public interest. Further delay would only result in overharvest. NMFS finds for good cause that the implementation of this action should not be delayed for 30 days. Accordingly, under 5 U.S.C. 553(d), a delay in the effective date is hereby waived.

This action is required by 50 CFR 679.20 and is exempt from review under E.O. 12866.

Authority: 16 U.S.C. 1801 *et seq.*

Dated: June 8, 1999.

Gary C. Matlock,

Director, Office of Sustainable Fisheries, National Marine Fisheries Service.

[FR Doc. 99–15003 Filed 6–9–99; 4:29 pm]

BILLING CODE 3510–22–F

Proposed Rules

Federal Register
Vol. 64, No. 113
Monday, June 14, 1999

This section of the FEDERAL REGISTER contains notices to the public of the proposed issuance of rules and regulations. The purpose of these notices is to give interested persons an opportunity to participate in the rule making prior to the adoption of the final rules.

OFFICE OF PERSONNEL MANAGEMENT

5 CFR PART 630

RIN: 3206–AI71

Absence and Leave; Use of Restored Annual Leave

AGENCY: Office of Personnel Management.

ACTION: Proposed rule with request for comments.

SUMMARY: The Office of Personnel Management is issuing proposed regulations to aid agencies and employees involved inYear 2000 (Y2K) computer conversion efforts. The regulations provide that excess annual leave forfeited by employees who are unable to schedule and use their leave as a result of Y2K computer conversion efforts will be deemed to have been scheduled in advance and therefore eligible for restoration.

DATES: Comments must be received on or before July 14, 1999.

ADDRESSES: Comments may be sent or delivered to Donald J. Winstead, Assistant Director for Compensation Administration, Office of Personnel Management, Room 7H31, 1900 E Street NW., Washington, DC 20415–8200, FAX (202) 606–0824, or email to payleave@opm.gov.

FOR FURTHER INFORMATION CONTACT: Sharon Herzberg, (202) 606–2858, FAX (202) 606–0824, or email to payleave@opm.gov.

SUPPLEMENTARY INFORMATION: Section 6304 of title 5, United States Code, establishes limitations on the amount of annual leave that an employee may carry over from one leave year to the next. Most employees can carry over no more than 240 hours of annual leave to the next leave year. However, 5 U.S.C. 6304(d)(1)(b) also provides that excess annual leave lost as a result of ''exigencies of the public business when the annual leave was scheduled in advance'' may be restored to the affected employee.

For the purpose of Federal leave administration, an exigency of the public business occurs when there is a pressing need for an employee's service and his or her pre-approved annual leave must be canceled because there are no other practical alternatives available to accomplish the work by a given deadline. This situation may present itself later this year for Federal employees who are carrying out their agencies' efforts to address Year 2000 (Y2K) computer conversion problems. Many of these employees will be faced with the possible forfeiture of ''use or lose'' annual leave because they must remain on the job until the Y2K computer conversions have been implemented and thoroughly tested. Under the normal rules, agencies would be faced with the administrative burden of scheduling, canceling, and restoring such leave for these employees at a time when all available attention and energy should be focused on Y2K conversion efforts.

The Office of Personnel Management (OPM) believes the Government's efforts to address Y2K computer conversion problems constitute an exigency of the public business under 5 U.S.C. 6304(d)(1)(b), which justifies the restoration of any forfeited annual leave in excess of the maximum allowable limits. Since it is known in advance that it is not possible for employees affected by the Y2K exigency to be absent on leave, the scheduling and canceling of such leave places an unnecessary administrative burden on the employees and agencies involved.

Consistent with OPM's commitment to provide agencies with the human resources management tools they need to address Y2K computer conversion problems, we propose to simplify the procedures for restoring annual leave forfeited as a result of the Y2K exigency. Section 630.310(a) of title 5, Code of Federal Regulations, would deem the Y2K computer conversion project an exigency of the public business and establish January 31, 2000, as the Governmentwide termination date for the Y2K exigency. In addition, under § 630.310(b), annual leave forfeited as a result of the Y2K exigency would be deemed to have been scheduled in advance for the purpose of satisfying the requirements in 5 U.S.C. 6304(d) and 5 CFR 630.308. Therefore, annual leave forfeited as a result of the Y2K exigency would be restored under 5 U.S.C. 6304 and placed in a separate restored leave account. The procedures established by these proposed regulations are similar to those established for employees of Department of Defense installations undergoing closure or realignment.

Time Limit for Use of Restored Leave

The existing regulations at § 630.306 provide that annual leave restored as a result of an exigency of public business must be scheduled and used not later than the end of the leave year ending 2 years after the termination date of the exigency. The Governmentwide termination date for the Y2K exigency would be January 31, 2000. Therefore, consistent with the current regulations, § 630.310(c) would provide that annual leave restored because of the Y2K computer conversion exigency must be scheduled and used not later than the end of leave year 2002.

Treatment of Current Restored Leave Accounts

Many employees currently involved in Y2K computer conversion efforts have an ''active'' restored leave account—i.e., an account of restored annual leave that was established under other conditions permitting restoration of annual leave under 5 U.S.C. 6304(d). Since there is no authority to restore previously restored annual leave, employees (and agencies) have little option but to use (or permit the use of) the leave in the ''active'' restored leave account to avoid the forfeiture of annual leave, even though the employees are needed to work on Y2K conversions. The proposed regulations at § 630.310(d) would alleviate this problem because the time limitation for using active restored annual leave would be canceled for the entire period during which employees' services are determined to be necessary for the completion of Y2K computer conversion efforts. As of January 31, 2000, a new time limit would be established under § 630.310(b) for using all restored leave available to the employee under 5 U.S.C. 6304(d). The new time limit for using restored annual leave would be not later than the end of leave year 2002.

Employees Who Transfer to Another Position

As noted earlier, § 630.308 currently requires that before forfeited annual

leave may be considered for restoration, it must have been scheduled in writing before the start of the third biweekly pay period prior to the end of the leave year. We are concerned about the possible consequences of requiring advance scheduling for an employee who transfers from a position deemed necessary for Y2K conversion efforts to another position during the latter portion of leave year 1999. It is possible that such employees would have leave in excess of the maximum limitation, but would still be unable to schedule it. Therefore, § 630.310(e) would allow an agency to consider restoration of annual leave forfeited at the end of leave year 1999 to an employee whose involvement in Y2K conversion efforts ends during the leave year if the agency determines that there is a correlation between the lack of advance scheduling and the employee's Y2K conversion efforts.

OPM believes such annual leave may be considered for restoration. Section 630.310(e) would require affected employees to make a reasonable effort to comply with the advance scheduling requirement in § 630.308(a). However, the head of an agency could exempt an employee from the advance scheduling requirement if the employee could show that he or she was involved in Y2K conversion efforts during the leave year and was unable to comply with the scheduling requirement due to circumstances beyond his or her control. Since the agency may determine that there was sufficient time for the employee to schedule and use annual leave before the end of leave year 1999, this provision would not guarantee that excess annual leave would be restored.

Annual leave restored to an employee in leave year 2000 as a result of the Y2K conversion exigency, but unused by the end of leave year 2002, will be forfeited, with no possibility of further restoration.

Regulatory Flexibility Act

I certify that these regulations would not have a significant economic impact on a substantial number of small entities because they would affect only Federal agencies and employees.

E.O. 12866, Regulatory Review

This rule has been reviewed by the Office of Management and Budget in accordance with Executive Order 12866.

List of Subjects 5 in CFR Part 630

Government employees.

Office of Personnel Management.

Janice Lachance,

Director.

Accordingly, OPM is proposing to amend part 630 of title 5 of the Code of Federal Regulations as follows:

PART 630—ABSENCE AND LEAVE

1. The authority citation for part 630 continues to read as follows:

Authority: 5 U.S.C. 6311; § 630.301 also issued under Pub. L. 103–356, 108 Stat. 3410; § 630.303 also issued under 5 U.S.C. 6133(a); §§ 630.306 and 630.308 also issued under 5 U.S.C. 6304(d)(3), Pub. L. 102–484, 106 Stat. 2722, and Pub. L. 103–337, 108 Stat. 2663; subpart D also issued under Pub. L. 103–329, 108 Stat. 2423; § 630.501 and subpart F also issued under E.O. 11228, 30 FR 7739, 3 CFR, 1974 Comp., p. 163; subpart G also issued under 5 U.S.C. 6305; subpart H also issued under 5 U.S.C. 6326; subpart I also issued under 5 U.S.C. 6332, Pub. L. 100–566, 102 Stat. 2834, and Pub. L. 103–103, 107 Stat. 1022; subpart J also issued under 5 U.S.C. 6362, Pub. L. 100–566, and Pub. L. 103–103; subpart K also issued under Pub. L. 102–25, 105 Stat. 92; and subpart L also issued under 5 U.S.C. 6387 and Pub. L. 103–3, 107 Stat. 23.

Subpart C—Annual Leave

2. In § 630.308, paragraph (a) is revised to read as follows:

§ 630.308 Scheduling of annual leave.

(a) Except as provided in paragraph (b) of this section and § 630.310, before annual leave forfeited under section 6304 of title 5, United States Code, may be considered for restoration under that section, use of the annual leave must have been scheduled in writing before the start of the third biweekly pay period prior to the end of the leave year.

* * * * *

3. A new § 630.310 is added to read as follows:

§ 630.310 Scheduling of annual leave by employees determined necessary for Year 2000 computer conversion efforts.

(a) Year 2000 computer conversion efforts are deemed to be an exigency of the public business for the purpose of restoring annual leave forfeited under 5 U.S.C. 6304. This exigency terminates on January 31, 2000.

(b) For any employee who forfeits annual leave under 5 U.S.C. 6304 at the beginning of leave year 2000 because the agency determined the employee's services were required during the Year 2000 computer conversion exigency, the forfeited annual leave is deemed to have been scheduled in advance for the purpose of 5 U.S.C. 6304(d)(1)(B) and § 630.208.

(c) Annual leave restored under 5 U.S.C. 6304(d) because of the Year 2000 computer conversion exigency must be scheduled and used not later than the end of leave year 2002.

(d) The time limits established under paragraphs (a) and (b) of § 630.308 for using previously restored annual leave do not apply for the period during which an employee's services were determined necessary for the completion of Year 2000 computer conversion efforts. On January 31, 2000, a new time limit will be established under paragraph (c) of this section for all annual leave restored to such an employee.

(e) An employee whose services were determined necessary during the Year 2000 computer conversion exigency for a portion of leave year 1999, but who subsequently moves to a position not involving Year 2000 computer conversion efforts, must make a reasonable effort to comply with the scheduling requirement in § 630.308(a). The head of the agency or his or her designee may exempt such an employee from the advance scheduling requirement in § 630.308(a) if coverage under paragraphs (a) and (b) of this section terminated during leave year 1999 and the employee can demonstrate that he or she was unable to comply with the advance scheduling requirement due to circumstances beyond his or her control.

[FR Doc. 99–14999 Filed 6–11–99; 8:45 am]

BILLING CODE 6325–01–U

DEPARTMENT OF AGRICULTURE

Agriculture Marketing Service

7 CFR Part 1216

[FV–98–702–PR3]

Peanut Promotion, Research, and Information Order; Extension of Voting Period

AGENCY: Agricultural Marketing Service, USDA.

ACTION: Proposed rule and referendum order; Amendment to referendum Order.

SUMMARY: This action extends the voting period for the referendum during which peanut producers will vote on whether the Peanut Promotion, Research, and Information Order will become effective. The voting period has been extended an additional 21 days to conclude on July 2, 1999, rather than June 11, 1999. This extension will better facilitate full voter participation.

DATES: In Order to be eligible to vote, peanut producers must have produced

peanuts during the period from August 1, 1997, through July 30, 1998 (representative period). The voting period for the referendum will be May 10 through July 2, 1999.

ADDRESSES: Daniel R. Williams II, Research and Promotion Branch, Fruit and Vegetable Programs, Agricultural Marketing Service, U.S. Department of Agriculture, Room 2535–S, Stop 0244, Washington, DC 20250–0244.

FOR FURTHER INFORMATION CONTACT: Daniel R. Williams II at the above address or telephone toll free (888) 720–9917.

SUPPLEMENTARY INFORMATION: Prior documents in this proceeding: Proposed Rule published in the November 6, 1998, issue of the **Federal Register** [63 FR 59893]; and Proposed Rule and Referendum Order published in the April 23, 1999, issue of the **Federal Register** [64 FR 20107] and Referendum Procedures published on the same day [64 FR 20102].

The April 23, 1999, referendum order [64 FR 20107] specified that the voting period would be from May 24, 1999, through June 11, 1999. However, the mailing list used for the referendum consisted of a large amount of rural route deliveries. This has resulted in a large amount of the ballots arriving later than expected or not all of the referendum ballot packages have been delivered to potentially eligible voters. In addition, the U.S. Department of Agriculture (USDA) has received numerous telephone calls from potentially eligible voters who did not receive ballots. Therefore, in order to better facilitate full voter participation in the referendum, USDA is extending the voting period through July 2, 1999. In addition, USDA will continue to mail ballots to those potentially eligible voters who request a ballot and others as they become known.

Section 518 of the Commodity Promotion, Research, and Information Act of 1996 (Act) requires that a referendum be conducted among eligible peanut producers as to whether they favor the Order. The proposed Order [64 FR 20107] would become effective if it is approved by a majority of producers voting in the referendum, which is currently ongoing.

Ballots to be cast in the referendum, and any related material relevant to the referendum, will be mailed by the referendum agents to all known peanut producers. Should any eligible producer not receive a ballot and related material, such producer should immediately contact the referendum agents at the telephone number that follows.

Amended Referendum Order

It is hereby directed that a referendum be conducted among peanut producers to determine whether they favor implementation of the Peanut Promotion, Research, and Consumer Information Order.

The referendum shall be conducted from May 24 through July 2, 1999. Ballots were mailed to all known eligible peanut producers on or before May 17, 1999. Eligible voters who do not receive a ballot by mail should call the following toll-free telephone number to receive a ballot: 1 (888) 720–9917. All ballots will be subject to verification. Ballots must be received by the referendum agents no later than July 2, 1999, to be counted.

Daniel R. Williams II and Martha B. Ransom, Research and Promotion Branch, Fruit and Vegetable Programs, Agricultural Marketing Service, U.S. Department of Agriculture, Room 2535–S, Stop 0244, Washington, DC 20250–0244, are designated as the referendum agents of the Secretary of Agriculture to conduct the referendum. The Procedure for the Conduct of the Referenda in Connection with the Peanut Promotion, Research, and Consumer Information Order, 7 CFR 1216.101–1216.107, which were published separately in the **Federal Register** [64 FR 20102], shall be used to conduct the referendum.

List of Subjects in 7 CFR Part 1216

Administrative practice and procedure, Advertising, Agricultural research, Marketing agreements, Peanuts, Reporting and record keeping requirements.

Authority: U.S.C. 7401–7425.

Dated: June 9, 1999.

Enrique E. Figueroa,

Administrator.

[FR Doc. 99–15112 Filed 6–11–99; 8:45 am]

BILLING CODE 3410–02–P

NUCLEAR REGULATORY COMMISSION

10 CFR Part 50

RIN 3150–AG11

Consideration of Potassium Iodide in Emergency Plans

AGENCY: Nuclear Regulatory Commission.

ACTION: Proposed rule.

SUMMARY: The Nuclear Regulatory Commission (NRC) is proposing an amendment to its emergency planning regulations governing the domestic licensing of production and utilization facilities. The proposed rule would amend the current regulations to require that consideration shall be given to including potassium iodide (KI), as a protective measure for the general public that would supplement sheltering and evacuation. KI would help prevent thyroid cancers in the unlikely event of a major release of radioactivity from a nuclear power plant. The proposed rule responds to petitions for rulemaking submitted by Mr. Peter G. Crane concerning the use of KI in emergency plans.

DATES: Submit comments by September 13, 1999. Comments received after this date will be considered if practical to do so, but only those comments received on or before this date can be assured of consideration.

ADDRESSES: Comments may be sent to the Secretary of the Commission, Attention: Rulemakings and Adjudications Staff, U.S. Nuclear Regulatory Commission, Washington, DC 20555, or may be hand-delivered to One White Flint North, 11555 Rockville Pike, Rockville, MD 20852, between 7:30 a.m. and 4:15 p.m. Federal workdays. Copies of comments received may be examined at the Commission's Public Document Room at 2120 L Street NW (Lower Level), Washington, DC.

You may also provide comment via the NRC's interactive rulemaking web site on the NRC home page (http://www.nrc.gov). This site provides the availability to upload comments as files in any format that the NRC web browser supports. For information about the interactive rulemaking site, contact Ms. Carol Gallagher, (301) 415–6215; e-mail *CAG@nrc.gov*.

FOR FURTHER INFORMATION CONTACT: Michael T. Jamgochian, Office of Nuclear Reactor Regulation, U.S. Nuclear Regulatory Commission, Washington, DC 20555–0001. Telephone: (301) 415–3224. Internet: MTJ1@NRC.GOV.

SUPPLEMENTARY INFORMATION: By undertaking this rulemaking, the Commission, while not adopting the exact language suggested by the petitioner, is proposing to grant a petition for rulemaking (PRM–50–63A) submitted by Mr. Peter Crane on November 11, 1997. That petition is a revision of a petition (PRM–50–63) that he submitted on September 9, 1995.

Considering all public comments received, the information available in the literature, 20 years of experience gained in evaluating licensee emergency preparedness plans, and the arguments presented by the petitioner, the Commission has decided to grant the petition for rulemaking and to proceed

with rulemaking to amend 10 CFR 50.47(b)(10) by inserting the following sentence, after the first sentence: ''In developing this range of actions, consideration has been given to evacuation, sheltering, and, as a supplement to these, the prophylactic use of potassium iodide (KI), as appropriate.'' In addition, the preamble for this proposed rule includes a statement to the effect that State and local decision makers, provided with proper information, may find that the use of KI as a protective supplement is reasonable and prudent for specific local conditions. When the Commission amended its emergency planning regulations on November 3, 1980, it stated that ''any direct funding of State or local governments solely for emergency preparedness purposes by the Federal government would come through FEMA.'' In its decision on June 30, 1997, the Commission also noted that, the Federal government (most likely the NRC) is prepared to fund the purchase of a stockpile of KI for the States, upon request. The Commission has determined that notwithstanding the June 30, 1997, intention that ''most likely the NRC'' would fund the purchase of State stockpiles of KI, the NRC budget has continued to decrease and offers little margin for the Commission to divert resources to new initiatives. Historically, funding for State and local emergency response planning has been the responsibility of those governments usually working with licensees. The Commission notes that the Petitioner has not requested the Federal funding of stockpiles of KI. In the alternative, the NRC will work with other relevant agencies to ensure that there are established robust, pre-positioned regional stockpiles of KI, to be effectively and timely used by states that have not established local stockpiles and wish to make use of the regional stockpiles in the event of a severe nuclear power plant accident.

On November 27, 1995 (60 FR 58256), the Nuclear Regulatory Commission (NRC) published a Notice of Receipt of a petition for rulemaking (PRM–50–63) filed by Mr. Peter G. Crane on his own behalf. The petitioner requested that the NRC amend its regulations concerning emergency planning to include a requirement that emergency planning protective actions include the prophylactic use of potassium iodide (KI), which the petitioner notes prevents thyroid cancer after nuclear accidents.

On November 11, 1997, the petitioner submitted a revision to his original petition (PRM–50–63A). The NRC published a Notice of Receipt of the amended petition on December 17, 1997 (62 FR 66038). In the amended petition, the petitioner requested that:

> A statement [be made] clearly recommending stockpiling of KI as a ''reasonable and prudent'' measure, and;
>
> A proposed rule change to 10 CFR 50.47(b)(10) which would be accomplished by inserting the following sentence after the first sentence: ''In developing this range of actions, consideration has been given to evacuation, sheltering, and the prophylactic use of potassium iodide (KI), as appropriate.''

The petitioner also provided a marked-up version of the NRC staff's proposed Federal Radiological Preparedness Coordinating Committee (FRPCC) **Federal Register** notice concerning Federal policy relating to the use of KI for the general public.

On June 26, 1998 (SRM 98–061), the Commission decided to grant the portion of the petition for rulemaking PRM–50–63A regarding the requested amendment to 10 CFR 50.47(b)(10). The Commission also directed that the preamble for the proposed rule include a statement to the effect that State and local decision makers, provided with proper information, may find that the use of KI as a protective supplement is reasonable and prudent for specific local conditions. The NRC staff is also preparing a technical report and an information brochure to enable State and local decision makers to make an informed decision in this matter.

Petitioner's Basis for Requesting Potassium Iodide

The petitioner stated that potassium iodide (KI) protects the thyroid gland, which is highly sensitive to radiation from the radioactive iodine that would be released in extremely serious nuclear accidents. By saturating the gland with iodine in a harmless form, KI prevents any inhaled or ingested radioactive iodine from lodging in the thyroid gland, where it could lead to thyroid cancer or other illnesses. The petitioner stated that the drug itself has a long shelf-life, at least 5 years, and causes negligible side effects.

The petitioner further stated that, in addition to preventing deaths from thyroid cancer, KI prevents radiation-caused illnesses. The petitioner notes that thyroid cancer generally means surgery, radiation treatment, and a lifetime of medication and monitoring. The petitioner asserted that the changes in medication that go with periodic scans put many patients on a physiological and psychological roller coaster. The petitioner stated that hypothyroidism can cause permanent retardation in children and, if undiagnosed, can condemn adults to a lifetime of fatigue, weakness, and chills.

The Petitioner's Discussion of the Three Mile Island Accident (TMI)

The petitioner noted that in December 1978, the Food and Drug Administration (FDA) announced that it had determined that KI was safe and effective for thyroid protection in nuclear accidents. The petitioner stated that the issue attracted little attention, that the NRC and the Federal Government as a whole took no public position on the drug, and that three months after the FDA announcement, on March 28, 1979, the TMI accident began to unfold. The petitioner stated that Federal and State officials, searching for supplies of KI in case it should be needed, discovered that none was to be had and that a supply had to be manufactured, literally overnight. The petitioner indicated that at 3:00 a.m. on Saturday, March 31, 1979, an FDA official arranged with the Mallinckrodt Chemical Company for the immediate production of 250,000 doses of KI.

The petitioner also discussed the Report of the President's Commission on the Accident at Three Mile Island (the Kemeny Commission report), issued in October 1979, and stated that the report was strongly critical of the failure to stockpile KI. The petitioner noted that among the Kemeny Commission's major recommendations was that an adequate supply of the radiation protective agent, KI for human use, should be available regionally for distribution to the general population and workers affected by a radiological emergency.

The Petitioner's Discussion of the Potassium Iodide Policy

The petitioner stated that in NUREG–0632, ''NRC Views and Analysis of the Recommendations of the President's Commission on the Accident at TMI,'' issued in November 1979, the NRC agreed with the findings of the Kemeny Commission and planned to require nuclear power plant licensees to have adequate supplies of KI available for nuclear power plant workers and the general public as part of State emergency response plans.

According to the petitioner, the three agencies most concerned, the FDA, the NRC, and the Federal Emergency Management Agency (FEMA), favored the stockpiling of KI for the next several years. The petitioner stated that the Atomic Industrial Forum, a nuclear industry trade association, declared itself against the stockpiling of KI in May 1982.

The petitioner indicated that the NRC staff was strongly in favor of KI

stockpiling as late as September 27, 1982, when the NRC staff submitted a memorandum to the Commissioners proposing that the Commission agree with a draft interagency policy statement supporting KI stockpiling. The petitioner further stated that on October 15, 1982, less than 3 weeks after sending the draft policy statement to the Commission for approval, the NRC staff sent a supplementary memorandum withdrawing the memorandum of September 27. The later memorandum informed the Commissioners that NRC's Office of Nuclear Regulatory Research (RES) could, by January 1, 1983, produce a paper showing that KI was significantly less cost-beneficial than previously assumed. The NRC staff proposed sending this document to the FDA and FEMA with the recommendation not to stockpile and distribute KI. The petitioner indicated that the NRC staff briefed the Commission in November 1983 on the NRC staff's proposal to take a strong position against KI. A policy statement was later issued that disposed of the Kemeny Commission's recommendation which favored stockpiling KI. According to the petitioner, only a year later, the Chernobyl accident would give tangible proof of the value of the drug in radiological emergencies.

The Petitioner's Discussion of the Effects of Chernobyl

The petitioner stated that during the Chernobyl accident of 1986, the damaged reactor spewed radioactive iodine over a wide area of what was then the Soviet Union and Poland. The petitioner further stated that in Russia, the Ukraine, and Belarus, where the distribution of KI was inadequate and untimely, the population in these countries is now experiencing extraordinarily high levels of childhood thyroid cancer. However, in Poland, where KI was administered to 97 percent of the nation's children, there has been no similar increase in thyroid cancer. The petitioner noted that Poland is a proof-positive example of the benefits of a well-prepared KI program.

The petitioner stated that the U.S. Government is spending money to study radiation-caused thyroid cancer in the Ukraine and Belarus, and the Department of Energy (DOE) announced a $15 million, 15-year program that will follow 70,000 children in the Ukraine, to understand the thyroid cancer risk of exposure to radio iodine. The petitioner further stated that the U.S. Government has spent generously to bring Ukrainian doctors to the United States for training in thyroid surgery because mishandled operations can result in damaged nerves and larynxes, rendering patients permanently mute.

The petitioner discussed post-Chernobyl developments on KI policy. He stated that the Chernobyl accident demonstrated that KI worked and that countries that failed to stockpile and distribute it are experiencing serious public health problems.

The Petitioner's Discussion of the NRC's Reconsideration of Potassium Iodide

The petitioner notes that in June 1989, the NRC reconsidered the KI issue after the petitioner filed a Differing Professional Opinion urging a change in policy. On November 27, 1989, the American Thyroid Association wrote to the NRC urging KI stockpiling on a nationwide basis and, in 1990, the NRC announced that it was reconsidering the existing Federal policy. In April 1992, a contractor under the sponsorship of the NRC Office of Nuclear Regulatory Research issued a report that included a revised cost-benefit analysis of the use of KI. The petitioner described the report as concluding that stockpiling KI continued to be not cost-effective, but that the difference between costs and benefits was narrower than had been calculated by the NRC staff in the early 1980s. The petitioner further indicated that, in December 1993, an industry trade group, the Nuclear Utility Management and Resources Council, sent a report entitled ''Review of Federal Policy on Use of Potassium Iodide,'' to the Commission arguing against any change in current KI policy.

The petitioner noted that, in March 1994, the NRC staff declared its support for KI stockpiling. However, the NRC staff proposal for a change in policy was not adopted, the Commissioners having voted 2 to 2 on the staff's proposal in May 1994. (Under Commission procedures, a tie vote means that a proposal fails.)

The Petitioner's Discussion of Additional Support for Granting the Petition for Rulemaking

The petitioner described a September 1994, FEMA publication proposing a ''Federal Radiological Emergency Response Plan'' that envisioned the use of KI during radiological emergencies. Under the plan, the NRC would be the lead Federal agency during emergencies at nuclear power plants and would advise State and local governments whether or not to distribute KI (based on advice received from an interagency panel). The States and localities would then administer the KI, if necessary.

The petitioner also indicated that the Board of Governors of the International Atomic Energy Agency, with U.S. Government support, adopted new International Basic Safety Standards in 1994. The petitioner stated that these standards represented the consensus of the world's experts on radiation safety and the standards provide, among other things, that intervention levels of immediate protective actions, including sheltering, evacuation, and iodine prophylaxis, shall be specified in emergency plans. Thus, the petitioner stated, the international radiation protection community, like the Kemeny Commission in 1979 and the short-lived draft Federal policy statement of 1982, recognized that effective preparedness for radiological emergencies means having three actions to consider [evacuation, sheltering and iodine prophylaxis].

The Petitioner's Discussion of the Merits of the Petition for Rulemaking

The petitioner believes the NRC should implement the recommendation of the Kemeny Commission and that the United States should maintain the option of using the drug KI for public thyroid protection during nuclear accidents. The petitioner requested that the Commission definitively review and decide on the issue rather than simply having the NRC staff decide not to propose it to the Commission.

The petitioner stated that evacuation is not necessarily the protective measure of choice in every emergency, and even when it is the preferred option, it is not always feasible. The Kemeny Commission report explained that different types of accidents, and the particular circumstances presented, may call for different protective measures. The petitioner notes that maintaining a KI option ensures that responsible authorities have the option of additional protection at their disposal.

The petitioner indicated that NRC has made it clear that a finding of adequate emergency planning does not translate into a guarantee that the entire affected public can be evacuated, but that evacuation is generally feasible.

The petitioner believes that sometimes, either by choice or necessity, authorities may decide to shelter people or tell them to remain indoors rather than evacuate them. The petitioner points out that it may be desirable to administer KI any time people are sheltered or told to stay indoors, when evacuation routes would take people through areas of radiological contamination, and when there has been a large airborne release of radioactive iodine to the atmosphere.

The petitioner believes that the decision on stockpiling KI should turn on whether, given the enormous

consequences of being without it in a major accident, the drug is a prudent measure; not on whether it will necessarily pay for itself over time. The petitioner further believes that KI represents a kind of catastrophic-coverage insurance policy offering protection for events which, while they occur only rarely, have such enormous consequences that it is sensible to take special precautions.

The petitioner stated that the estimates of KI's cost-effectiveness depend on estimates that are no more than informed guesses about the probability of severe accidents and that the NRC's cost-benefit analysis of the early 1980s was based on the assumption that a severe accident with a major release of radioactivity could occur in this country only once every 1 or 2 thousand years.

The petitioner believes that if it were really true that serious accidents with a release of radioactivity were so unlikely, there would be good reason not only to reject stockpiling of KI but also to dispense with all emergency planning. The petitioner also stated that if KI is not cost-effective, then the rest of nuclear emergency planning is probably not cost-effective either.

The petitioner believes that cost-benefit analysis is a technique that should be applied with good sense, especially where public health measures are concerned. According to the petitioner, the cost-benefit analysis of KI proceeded from the assumption that there was no difference in desirability between prevention of radiation-caused thyroid disease and cure. Thus, the only factor to be considered in evaluating KI was the cost. The petitioner also believes that the U.S. Government determined that instead of spending money to prevent radiation-caused thyroid disease, society should spend its money treating the disease if and when it occurs.

The petitioner believes that the existing policy on KI was defective from the start because it was based, in part, on inaccurate information provided to the NRC Commissioners. He stated that the information provided to the NRC Commissioners seriously understated the significance of radiation-caused thyroid disease and thereby understated to an equal degree the value of KI.

The petitioner also believes that it was not clear that the Commission had any idea of the real nature of post-accident thyroid disease at the time it adopted an anti-KI position.

The petitioner stated that existing policy left the judgment on stockpiling KI to the States. The petitioner asserts that this policy also ensures that the States do not have an adequate basis for making informed decisions. He believes that the Federal Government, and NRC in particular, has failed to provide the States with sound technical advice on the subject. The petitioner also believes that without accurate and current information on KI—including the Chernobyl experience and the consensus of international experts—States cannot make an informed judgment.

The petitioner believes that no State or local official or member of the public could imagine that in a real emergency, there would be no KI to administer. The petitioner raised the question: If KI stockpiling is not worthwhile, why is the administration of the drug one of the protective measures identified in the 1994 Federal Emergency Response Plan? He also asked why, if KI is worthwhile, as the plan implies, something is not being done to make sure that it is available.

The petitioner believes that the Federal Government should either change the 1985 policy and make the use of KI a viable option in a real emergency, or it should explain why the United States has decided that KI will not be an option.

The Petitioner's Proposed Amendment to the NRC Regulations

In the original petition (PRM–50–63) that was submitted on September 9, 1995, the petitioner requested that 10 CFR Part 50 be amended to include language taken from FEMA's Federal Radiological Emergency Response Plan of September 1994, and recommended the following revision to the regulations.

The petitioner proposed that Section 50.47(b)(10) be amended to read as follows:

> (10) A range of protective actions including sheltering, evacuation and prophylactic use of iodine have been developed for the plume exposure pathway EPZ [emergency planning zone] for emergency workers and the public. Guidelines for the choice of protective actions during an emergency, consistent with Federal guidelines, are developed and in place, and protective actions for the ingestion exposure pathway EPZ appropriate to the locale have been developed.

In the revised petition (PRM–50–63A) that was submitted on November 11, 1997, the petitioner requested that 10 CFR 50.47(b) (10) be revised to read:

> (10) A range of protective action have been developed for the plume exposure EPZ for emergency workers and the public. In developing this range of actions, consideration has been given to evacuation, sheltering, and the prophylactic use of potassium iodide (KI), as appropriate. Guidelines for the choice of protective actions during an emergency, consistent with Federal guidelines, are developed and in place, and protective actions for the ingestion exposure pathway EPZ appropriate to the locale have been developed.

The petitioner believes that if this revised change is adopted, the plan will become an accurate description of emergency preparedness for radiological emergencies; the recommendation of the Kemeny Commission will at last be implemented; and the United States will be in compliance with the International Basic Safety Standards.

The petitioner suggested that the NRC, either on its own or jointly with other agencies, issue a policy statement declaring that KI stockpiling is a reasonable and prudent measure that is necessary to ensure that the drug will be available in the event of a major accident. The petitioner believes that this statement would clarify that KI can be used in conjunction with evacuation and sheltering to maximize protection to the public.

The petitioner also believes that the policy statement would show the willingness of the NRC to provide a stockpile of the drug to States and localities upon request, and would support the Kemeny Commission's recommendation to create regional stockpiles of the drug as a backup for emergencies.

Discussion

Stockpile of Medicinal Supplies for Nuclear, Biological, and Chemical Agents (1995)

In June 1995, the President issued Presidential Decision Directive 39 (PDD–39) on U.S. Policy on Counter Terrorism. The PDD–39 directed Federal agencies to take a number of measures to reduce vulnerability to terrorism, to deter and respond to such acts, and to strengthen capabilities to prevent and manage the consequences of terrorist use of nuclear, biological, and chemical (NBC) weapons, including weapons of mass destruction. The PDD–39 assigned to FEMA the task of ensuring that the Federal Response Plan (FRP) was adequate to respond to the consequences of terrorism.

FEMA, in coordination with the Catastrophic Disaster Response Group (CDRG) [1], developed a draft report to the President entitled, ''An Assessment of Federal Consequence Management

[1] The CDRG is the headquarters senior-level coordinating group which addressees policy issues regarding the Federal Response Plan (FRP). The CDRG is chaired by FEMA and comprises of representatives of Federal departments and agencies with responsibilities under the FRP. The NRC is represented by the Incident Response Division Director, AEOD.

Capabilities for Response to Nuclear, Biological or Chemical (NBC) Terrorism,'' dated June 12, 1996. The report recommended, among other things, that the Federal Government purchase and stockpile thyroid blocking agents (KI) for the general public that could be used in the event of a nuclear terrorist event. The NRC was a member of the Core Group which generated the recommendations and was instrumental in adding KI to the list of medical supplies to be stockpiled nationally.

The Core Group concluded that as the result of recent events, significant threats over the past few years, and the increased availability and proliferation of NBC materials, there is an increasing concern for the potential of terrorist incidents. NBC events, the report continued, may occur as a local event with potentially profound national implications. In responding to these events, the first responders must be able to provide critical resources to the victims. These include, but are not limited to, chemical nerve antidotes, vaccines for anthrax, and antibiotics. The Core Group identified the need to purchase and preposition stockpiles of adequate medical supplies at the Federal, State, and local level. While KI was not considered as vital as chemical nerve antidotes and vaccines, the NRC staff was successful in getting KI included with other medical supplies for NBC events because of the unusual characteristics of these events.

Because of the special characteristics of NBC events, the Core Group recommended a broader range of protective actions. The NRC concurred in the findings of the report in a letter dated September 25, 1996, from the Director of NRC's Office of Analysis and Evaluation of Operational Data to FEMA's Director. The report was subsequently presented to the President in February 1997, and approved for distribution in May 1997. However, FEMA recently reported that the federal stockpiles of KI are few and stocked only for first responders to terrorist action. As things stand now, needs of members of the public for KI on an ad hoc basis would have to be supplied from other sources. As stated above, the Commission intends to work with FEMA to assure that stockpiles contain adequate supplies of KI.

FRPCC Subcommittee on KI (1996)

Along with petitioning the NRC, Mr. Crane also requested that FEMA review his petition and reconsider the Federal policy. In early 1996, the FRPCC convened an Ad-Hoc Subcommittee on Potassium Iodide to request and review new information on this matter from interested parties. The subcommittee conducted a public meeting on June 27, 1996. The subcommittee evaluated all comments from the June 27 public meeting and made the following recommendation regarding the Federal KI policy:

1. Without changing the Federal policy by interceding in the State's prerogative to make its own decisions on whether to use KI, the Federal Government (NRC, or through FEMA) should fund the purchase of a stockpile for a State that decides to incorporate KI as a protective measure for the general public;

2. The Subcommittee believes the language in the 1985 policy should be softened to be more flexible and balanced. For example, the problem many interveners observe with the Federal policy is the italicized statement ''The Federal position with * * * potassium iodide for use by the general public is that it should not be required.'' It would not be as negative if the last phrase were reworded to state ''it [potassium iodide for use by the general public] is not required, but may be selected as a protective measure at the option of the State or, in some cases, local governments.''

3. The subcommittee recommends that local jurisdictions that wish to incorporate KI as a protective action for the general public should consult with the State to determine if these arrangements are appropriate. If local governments have the authority or secure the approval to incorporate KI as a protective measure for the general public, they would need to include this measure in their emergency plans.

Analysis of Issues Raised by Public Comments

The Commission has considered the KI policy question on numerous occasions since 1984. The voting history of the Commission shows that reaching consensus on this policy question has been an elusive goal. An important reason for this historical lack of consensus is that this policy question is not a clear cut one. Individual Commissioners, past and present, have differed in their views with respect to the relative importance to be given to factors bearing on the KI issue. These honest differences have led to divided Commission views on how to resolve the policy question. The Commission is agreed that its historical difficulty to reach consensus on the KI policy question underscores the reality that this policy question is not a simple one, is not one that is easily resolved and, as a result, has been the subject of protracted deliberation.

On November 5, 1997, the Commission held a public meeting with its staff, FEMA representatives, and the author of the 1995 rulemaking petition to consider the petition and proposed changes to the Federal policy on the use of KI. In part as a result of the meeting, the petitioner amended his petition to ask for a rule that would require that consideration would be given in the formulation of emergency plans to the use of KI as a supplement to evacuation or sheltering, and on June 26, 1998, the Commission granted the amended petition, and directed the NRC staff to initiate the requested rulemaking. The Commissioners also decided that the FRPCC **Federal Register** notice on Federal KI policy should include a statement to the effect that the State and local decision makers, provided with proper information, may find that the use of KI as a protective supplement is reasonable and prudent for specific local conditions. On September 30, 1998, the Commission approved a draft **Federal Register** notice and directed that it be sent to the FRPCC.

On November 27, 1995 (60 FR 58256), a Notice of Receipt of the Petition for Rulemaking was published in the **Federal Register** requesting public comment. A total of 63 comment letters were received, of which 20 utilities, 9 State governmental agencies, 2 utility interest organizations, 1 letter signed by 12 health physicists, 2 State universities and 1 member of the public were against the granting of the petition for rulemaking. Those letters in favor of granting the petition came from 5 environmental groups, 22 members of the public (including 1 from the petitioner), and the American Thyroid Association.

On December 17, 1997 (62 FR 66038), the Commission published a request for public comment on the revised petition in the **Federal Register**. In response to several requests, the comment period was extended until February 17, 1998, by a **Federal Register** notice published on January 21, 1998 (63 FR 3052). A total of 82 comment letters were received, of which 13 utilities, 3 State governmental agencies, 1 utility interest association, and 1 member of the public were against granting the petition for rulemaking. The letters in favor of granting the petition came from 8 public interest groups, 46 members of the public (including 1 from the petitioner), 3 physicians, 2 U.S. Senators, and 1 State Representative. The following issues were raised by the public commenters with an accompanying NRC staff response:

Issue 1: Nearly all nations with nuclear power protect their citizens by having KI readily available and the logistics of distribution do not seen to pose any significant problems. Would implementing a policy of using KI for the general public be so difficult?

Staff Response: At the November 5, 1997, Commission meeting, senior NRC

staff members told the Commission: ''We recognize that there are difficulties in distribution, but they are not insurmountable. If a decision is made by the State to do it [stockpile and/or predistribute KI] we can figure out a way to do it.'' It is the staff's perception that if the State decides to include KI as a supplemental protective measure for the general public, one possible method of implementation could be that the State could make KI readily available where other over-the-counter drugs can be purchased. The public could be informed of the drug's availability through the yearly emergency preparedness information brochure that is mailed out to all residents throughout the 10 mile EPZ. It would then be up to individual members of the public to obtain and store this supply of KI, which should then be available for use in the event of an emergency. The administration of the KI could be at the direction of the State Medical Officer.

Issue 2: It is ''factual that the 1986 Chernobyl accident clearly demonstrated the benefit of having KI readily available. In Poland, where authorities expediently administered 18 million doses of KI, 97 percent of all Polish children were protected from thyroid disease. In contrast, there are soaring rates of childhood thyroid cancer, 200 times pre-Chernobyl levels, in the former Soviet republics of Russia, Belarus, and the Ukraine because very little KI was administered, too long after exposure.''

Staff Response: The Chernobyl reactor (a RBMK–1000 design) is located in the Ukraine close to Belarus. The accident occurred at 01:23 on Saturday, 26 April 1986, when explosions destroyed the reactor core and reactor building. The explosions sent debris from the core flying into the air and exposed the reactor core to the atmosphere. The heavier debris from the plume was deposited close to the site. In general, the initial release is thought to have risen to over 1 km in altitude, thereby resulting in much lower doses close to the site than those expected from a ground level release. The major release lasted 10 days, during which most of the noble gases and more than 40 percent of the iodines are estimated to have been released. The varying meteorological conditions, release rates, and release heights resulted in very complex dose and ground deposition patterns.

It is often assumed that ingestion was the major source of thyroid dose early in the accident. However, the contribution of inhalation cannot be assessed because air sampling was not effectively conducted early in the accident. As of 1996, except for thyroid cancer, there has been no confirmed increase in the rates of other cancers, including leukemia, among the first responders, liquidators,[2] or the public, that have been attributed to release from the accident.

Belarus Experience. With the Chernobyl plant located only 4 miles (7 km) away, Belarus was heavily impacted by the accident. This impact was heightened by the fact that protective actions were not implemented in Belarus during the first six days after the accident. Several authors have stated that KI was distributed to the population in Belarus during the first week following the accident.[3] However, there is no confirmed published data on the dosage, coverage, or other details concerning the implementation of the thyroid blocking in Belarus.[4] In addition, cows typically grazed in Belarus at the time of year when the accident occurred, and yet no efforts were taken to restrict the consumption of contaminated milk for the first 10 days following the accident.

On May 2 (day 7 following the accident) the decision was made to evacuate the areas of Belarus and Ukraine within 18 miles (30 km) of the plant (30 km zone). The evacuation was completed on May 5, 1986.

Since 1990, a rapid increase has been observed in the incidence in thyroid cancer among Belarus children who were 0 to 14 years old at the time of the accident. Before the accident, the rate of thyroid cancer among this cohort was about 0.4 per 100,000; by 1996, this rate had risen to 3.9 per 100,000.[5,6] This included approximately 3,000 children, 0 to 18 years old, that were evacuated from the 30-km zone within Belarus. Among this group, four thyroid cancer cases have been detected since the accident. All of these cases were registered after the end of the latent period for radiation-induced thyroid cancer. Taking into account the spontaneous rate of this disease in this age group and the number of evacuated persons, all of these cases are considered accident-induced.

The total number of excess thyroid cancers in Belarus children is currently about 750, and is estimated to reach a maximum of more than 3500 over the lifetime of this cohort.[3, 4, 6] The vast majority of the thyroid cancers were diagnosed among those living more than 50 km (31 miles) from the site.

The increase in the rate of thyroid cancers in Belarus is concentrated among those who were youngest at the time of the accident. Fortunately, these cancers respond favorably to early treatment; to date, two or three of the Belarus children diagnosed with thyroid cancer have died as a result of that disease.[6]

Poland Experience. Poland detected increased levels of airborne radioactive contamination on the night of April 27, 1986 (day 2). Although there was no official notification of the accident by the USSR, it was assumed, on the basis of Tass News Agency reports, that the increases were attributable to the accident at Chernobyl. On April 28 (day 3), the country formed a governmental commission to recommend protective actions. Among these actions, the commission recommended intervention levels for taking protective actions on the morning of April 29 (day 4).[7]

On April 29, Poland's Minister of Health gave orders to prepare and distribute KI to the 11 provinces most affected. KI was to be made available through hospitals, public health centers, schools, and kindergartens. The country used its mass media to announce the protective action and to appeal for volunteers to assist in the nationwide distribution.

The Commission then instituted the following additional protective measures:[8]

- Feeding of cows on pastures or with fresh fodder was banned countrywide until May 15, 1986.
- Fresh milk with radioactivity concentration above 1,000 Bq/L was banned for consumption by children and pregnant or lactating women.
- All children under the age of 4 were given powdered milk through numerous distribution centers.
- Children and pregnant or lactating women were advised to eat a minimum of fresh leafy vegetables (until May 16, 1986).

[2] Liquidators are a large number (about 200,000) of workers and military personnel who performed cleanup, construction of the sarcophagus, and other operations in the contaminated zones following the accident.

[3] Personal communication, E. Buglova M.D., Head Laboratory of Radiation Hygiene and Risk Analysis, Ministry of Health, Republic of Belarus, December 1997.

[4] ''Thyroid Cancer in Children Living Near Chernobyl, Expert Panel Report on the Consequences of the Chernobyl Accident''—Williams D. et al., K.H. ECSL–EAEC, Report EUR 15248 EN, Brussels-Luxembourg, 1993, p. 108.

[5] E. Buglova et al., ''Thyroid Cancer in Belarus After the Chernobyl Accident; Incidence, Prognosis, Risk Assessment.'' Low Doses of Ionizing Radiation: Biological Effects and Regulator Control, Spain, November 1997, Contributed Paper, pp. 280–284.

[6] ''Thyroid Cancer Incidence Rate in the Republic of Belarus.'' Okeanov A. et al., Radiation and Risk Bulletin of National Radio-Epidemiological Registry, Obninsk., 1995, Issue 6, pp. 236, 239.

[7] The Implementation of Short-term Countermeasures After a Nuclear Accident, Proceeding of an NEA Workshop Stockholm,'' Sweden, 1–3 June 1994, OECD 1995.

[8] Manual on Public Health Actions in Radiation Emergencies, WHO, European Center of Environmental and Health, Rome Division, 1995.

The distribution of KI was initiated on April 29 (day 4) and was virtually completed by May 2 (day 7). This included the distribution of KI to more than 90 percent of the children under the age of 16 and about a quarter of the adults. A total of 10.5 million doses of KI were given to children and 7 million doses were given to adults. Multiple doses, although not recommended, were taken in a number of cases. Because of diminishing air contamination, the KI prophylaxis was not repeated. In the second phase of the response, powdered milk was made available to all children less than 4 years of age. This program effectively started on May 3 (day 8).

It is estimated that approximately a 40–45 percent reduction in thyroid burden was achieved by thyroid blocking and milk restrictions in the 11 provinces treated.[7] Had the Russian authorities given prompt warning, the 24- or 48-hour gain in time might have improved the effectiveness of their response.

There were no reported serious adverse reactions except for two adults with known iodide sensitivity. About 36,000 medically significant reactions were also reported (mostly nausea).[9] Because of the low iodine concentrations in Poland it is doubtful that epidemiological studies could detect excess cancers resulting from intake of radio iodine.[8]

International Practices—During this assessment, the NRC staff examined the current policies and practices regarding the use of thyroid blocking during Nuclear Power Plant accidents for a number of countries. The NRC staff accomplished this task primarily through personal communication with colleagues in each country. In general, the countries either are following or intend to implement systems that are consistent with the guidance promulgated by the World Health Organization (WHO). Specifically, the WHO recommends predistribution of stable iodine close to the site and stockpiles further from the site. These stocks should be strategically stored at points such as schools, hospitals, pharmacies, fire stations, or police stations, thereby allowing prompt distribution. A further description of the WHO guidance is provided below, followed by a discussion of the guidance promulgated by IAEA and a comparison between U.S. and international practice.

World Health Organization (WHO) Guidance. The main points of the WHO Guidelines [10, 11] regarding the use of stable iodine are as follows:

- *Near field:* Stable iodine should be available for immediate distribution to all groups if the predicted thyroid dose is likely to exceed national reference levels. Close to nuclear installations iodine tablets should be stored or predistributed to facilitate prompt utilization.
- *Far field:* Stable iodine should be available for distribution to pregnant women, neonates, infants, and children if the predicted dose is likely to exceed reference levels.

Conclusion from Polish Experience. In Poland (1) Small amounts of radioactive iodine were deposited as a result of the Chernobyl accident, (2) no protective actions were taken for the first 2 days of the accident, and (3) protective actions (except sheltering or evacuation) were taken after the first 2 days of the accident. Because of the low iodine concentrations in Poland and the protective actions implemented, Poland has not detected excess cancers resulting from intake of radio iodines.

Overall Chernobyl Conclusion. The World Health Organization, almost every industrial country in the world with nuclear power plants, and the American Thyroid Association, believe that the low iodine concentrations, the banning of the consumption of fresh milk and the distribution and administration of 90 million doses of KI contributed to the observed lack of increase of childhood thyroid cancers in Poland. Most industrial nations with nuclear power plants have decided to stockpile KI around nuclear power for use by the general public.

In contrast to the Chernobyl experience, in the event of an accident in the United States, our emergency planning calls for protective actions, sheltering, evacuation, and removal of contaminated food from consumption all of which significantly reduce the risk of exposure of the public to all radionuclides. Making KI available to the public for use during evacuation or especially sheltering could, under certain conditions, reduce the risk resulting from exposure to one important group of radionuclides, the radioiodines. That is why current NRC guidance discusses KI for plant personnel, emergency workers, and institutionalized persons unlikely to be evacuated promptly.

In this light the Commission agrees that the use of KI may be determined by State and local emergency response planners to be a supplementary protective measure.

Issue 3: ''Stockpiling or predistribution of potassium iodide (KI) as a protective action would not add any significant public health and safety benefit to the current level of protection provided by existing emergency plans for commercial nuclear power plants. Our emergency plans focus on evacuation as the key protective action to prevent exposure since it protects against exposure to all radionuclides, not just iodine. In addition, the potential for misadministration of KI is present when predistributed to the general public, and incidents of misadministration have been informally reported at industry meetings by states which predistributed KI to the public.''

Staff Response: The Commission agrees that it is the State's prerogative to decide to include stockpiling or predistribution of KI as a protective action for the general public. The FDA concluded that risks from short term use of relatively low doses of KI are out weighed by the radiologically induced thyroid nodules or cancers at a projected dose to the thyroid gland of 25 rem or greater. In so doing, the FDA approved KI as an over-the-counter drug. The American Thyroid Association fully endorses the use of KI and, as previously discussed, there were only 2 significant adverse reactions and 36,000 medically significant reactions (nausea) in 90 million doses of KI after the Chernobyl accident. The taking of KI should require precautions similar to those associated with any other over-the counter drug, and, of course, the packaging instructions should be followed.

Issue 4: ''Evacuation is more feasible and practicable. Stockpiling of KI has logistical problems which we feel renders this idea impracticable and unmanageable.''

Staff Response: The staff agrees that evacuation is usually ''feasible and practicable'' and is the most effective protective action. If the State decides to include KI as a supplemental protective measure for the general public, one possible method of implementation could be that the State could make KI readily available such as by making it available where other over-the-counter

[9] A ''medically significant'' reaction was one for which the person suffering the reaction consulted a physician more than once. Nauman and Wolff, ''Iodide Prophylaxis in Poland After the Chernobyl Reactor Accident: Benefits and Risks,'' The American Journal of Medicine, Vol. 94, May 1993, p. 530. About .2% of the population that received KI had ''medically significant'' adverse reactions to KI. Id. However, ''[i]t should be pointed out that control values for these side effects in a population not receiving KI are not available.'' Id. That is, it is not known what the incidence of such reactions would be in a population under similar stress, but not receiving KI, and thus it is not known to what extent these adverse reactions were the result of KI.

[10] International Basic Safety Standards for Protection Against Ionizing Radiation and for Safety of Radiation Sources, Safety Series No. 115, IAEA, 1996.

[11] ''Method for the Development of Emergency Response Preparedness for Nuclear or Radiological Accident,'' Tecdoc–953, IAEA, July 1997.

drugs can be purchased. The public could be informed of the drug's availability through the yearly emergency preparedness information brochure that is mailed out to all residents throughout the 10 mile EPZ. Individual members of the public would be responsible for obtaining and storing this supply of KI, which could then be available for use in the event of an emergency. Another approach to predistribution is to include stockpiling at reception centers for distribution during an evacuation. Other countries have found ways to effectively distribute KI when needed and the distribution issue is certainly not unsurmountable. The administration of the KI should be at the direction of the State Medical Officer.

Issue 5: The Three Mile Island experience has shown us that it is not easy to obtain an adequate supply of KI in an emergency.

Staff Response: The commenter is correct, in that it was difficult to obtain KI after the Three Mile Island accident. That is one reason why the Commission believes that planners should consider stockpiling KI, and why the Commission supports Federal stockpiles, so that States that have chosen not to stockpile KI could have access, albeit *ad hoc* and delayed, to an adequate supply in a radiological emergency at a nuclear power plant. As noted elsewhere in this notice, the Commission will work with other agencies to assure that there are Federal regional stockpiles that contain adequate supplies of KI. Moreover, the general availability of KI is greater now than at the time of the TMI accident, partly because of the FDA's approval of KI as an over the counter drug. Some States have elected to incorporate KI into the emergency response plans and have obtained adequate supplies for this purpose. The Commission is not aware of any factors that would constrain the availability of KI for stockpiling purposes. The Commission believes that an adequate supply of KI could be obtained.

Issue 6: Even though KI administration before any exposure is ideal, the Chernobyl experience also has shown that the exposure can continue for days. Is the institution of KI blockade at any time in this period beneficial?

Staff Response: The administration of KI is most effective if done before or immediately after (within 2 to 4 hours) a release. Nonetheless, during a chronic exposure of several days, the administration of KI any time during the exposure period may block some uptake of radioactive iodine. However, the benefit diminishes quickly over time and may be very small if administered late. If a release is expected to continue for several days, the NRC anticipates that the public would be evacuated or other protective action would be taken, depending on the level of release. KI could nevertheless serve as a useful supplemental and complement to these primary protective actions.

Issue 7: KI is an effective thyroid blocking agent only when administered immediately before or after an exposure to radioactive iodine (that is, within one to two hours). Distribution of KI in a timely fashion to the general public following an accident could further complicate and decrease the effectiveness of implementing evacuation or residential sheltering.

Staff Response: The staff disagrees with this position. If a State chooses to include KI as an additional protective measure, it is anticipated that the State could make KI readily available to the public where other over-the-counter medicines are available or by other distribution means and that the public be made aware of its (the KI) availability, not at the time of an emergency, but KI could be made available year round.

Issue 8: One of the major impediments to distribution of KI to school children is coordination and administration of the program, e.g., the actual decision making process to administer KI or evacuate, parental approval and recordkeeping, identification and documenting allergic reactions, and the availability of a qualified medical professional to administer the potassium iodide.

Staff Response: The staff disagrees. Upon declaration of a general emergency there should be NO decision ''to administer KI or evacuate.'' The preferred protective action for the close-in population should be evacuation. The administration of KI should be treated in the same fashion as any other over-the-counter medication that might be given to children while away from home, after observing the instructions provided with the KI packaging. Prior parental approval to administer KI in the event of an emergency can and should be addressed in the planning process for any State that decides to use KI. The individual State may provide the appropriate guidance and establish a system for obtaining parental approval before the taking of other protective actions that are currently being followed in the EPZ around nuclear power plants.

Issue 9: Does the post-Chernobyl Polish experience show that large-scale deployment of KI is safe?

Staff Response: Approximately 18 million doses of KI were distributed primarily, but not exclusively, to children. The bulk of the distribution took about three days. There were no reported serious adverse reactions except for two adults with known iodide sensitivity. The rate of serious side effects (10^{-7}) is consistent with the frequency seen during routine use of KI for medical treatment of respiratory disease. The incidence of medically significant, but not serious, reactions to this single dose of KI was also very low (0.2 percent). In addition, no detectable long-term disturbance in children's thyroid function was detected as of 1989. Additionally, the FDA has approved KI for over-the-counter distribution. The staff, therefore, agrees that the post-Chernobyl experience has shown that large-scale deployment of KI is relatively safe.

Issue 10: Several comments raised the question of liability: ''Is the NRC prepared to address the number of legal implications should a member of the general public be given KI at their directive or recommendation and the individual have an extreme allergic reaction, possibly death?''; ''The **Federal Register** Notice does not address legal issues for states who decide to adopt KI and states who do not decide to adopt or administer KI to the public.''; ''The issue of legal liability should not be dismissed lightly. If the NRC decides to require stockpiling of KI for the general public, has NRC considered what liability may arise from any adverse health effects? No initiative such as this should be undertaken without resolution of this issue.''; ''Who would assume liability if the KI was used prior to the Governor ordering its use?'

Staff Response: The comments focus principally on concerns that State and local governments involved in distribution and administration of KI may be liable in tort if an individual receiving the KI has a significant adverse medical reaction to the KI. To the extent that commenters are raising the potential for federal government liability for the promulgation of this proposed rule, the NRC believes that whether the Commission may be subject to tort liability through the implementation of a KI program depends upon a number of factors. However, it would appear that a Commission decision to require state and local emergency planning officials to consider stockpiling KI for public distribution should be subject to the ''discretionary function'' exception to the Federal Tort Claims Act, 28 USC

2671, *et seq.*,[12] which protects the Federal Government from liability. The question of whether a State or locality might be liable for involvement with administration of KI to the general public can only be answered by reference to the laws and precedents of particular States. The NRC presumes that this would be part of the ''consideration'' that States and localities will undertake if this rule is promulgated. The NRC has not undertaken this analysis.

Issue 11: Does the Commission consider stockpiling and using KI as a reasonable and prudent protective measure for the general public?

Staff Response: The Commission believes that State and local decision makers, provided with proper information, may find that the use of KI as a protective supplement to evacuation and sheltering is reasonable and prudent for specific local conditions.

Commission Decision

KI is a reasonable, prudent, and inexpensive supplement to evacuation and sheltering for specific local conditions. Therefore, the Commission's guidance on emergency planning has long taken KI into consideration (NUREG–0654/FEMA–REP–1, Rev. 1, p. 63, items e and f.). However, since the last revision of that guidance, there has been experience with the mass distribution of KI during a radiological emergency, and though the record on that distribution is not complete, the indications thus far are that mass distribution is effective in preventing thyroid cancer and causes remarkable few threatening side effects. Moreover, many nations in Europe and elsewhere, nations as different in their circumstances, politics, and regulatory structures as France, Canada, and Japan, have stockpiled KI and planned for its use. So have some U.S. States. The World Health Organization and the International Atomic Energy Agency recommend its use. Therefore, in order to achieve greater assurance that KI will receive due attention by planners, it seems reasonable to take a small further step and, continuing to recognize the authority of the States in matters of emergency planning, explicitly require that planners consider the use of KI.

The proposed rule change should not be taken to imply that the NRC believes that the present generation of nuclear power plants is any less safe than previously thought. On the contrary, present indications are that nuclear power plant safety has improved since the current emergency planning requirements were put in place after the Three Mile Island accident.

The use of potassium iodide is intended to supplement, not to replace, other protective measures. This rule change thus represents no alteration in the NRC's view that the primary and most desirable protective action in a radiological emergency is evacuation of the population before any exposure to radiation occurs, whenever that is feasible. (Evacuation protects the whole body, whereas potassium iodide protects only a single gland, the thyroid.) Depending on the circumstances, KI may offer additional protection if used in conjunction with evacuation and/or sheltering.

The NRC recognizes that the decision to stockpile KI presents issues of how best to position and distribute the medicine, to ensure, e.g., that optimal distribution takes place in an emergency, with first priority given to protecting children; that persons with known allergies to iodine not take it; that members of the public understand that KI is not a substitute for measures that protect the whole body; etc. To date, these issues have been addressed in different ways in the numerous countries that currently stockpile KI. The NRC is working with States and localities to develop guidance on these and other points relating to the use of KI. The NRC believes that these implementation issues can be solved, given the level of expertise in the relevant Federal and State agencies, and the experience of numerous nations that have built KI into their emergency plans.

It is expected that States will inform FEMA and the NRC of the results of their consideration of whether to opt for stockpiling. This will enable the Federal government to engage in better contingency planning for States that decide against stockpiling KI.

The Commission decision is implemented by publication of this proposed rule that would change 10 CFR 50.47(b)(10) with a 90-day public comment period. If the proposed rule is adopted in final form, the petition would be granted in part and denied in part and NRC action would be completed on PRM 50–63 and PRM 50–63A.

Commission Conclusions or Issues Raised by the Petitioner and Public Commenters

The Commission having reviewed the issues raised by the petitioner and the public commenters, has reached the following conclusions:

A. The Commission agrees that KI, when determined by State and local emergency response planners and if administered in a timely fashion, could protect the thyroid gland from exposure to radioiodines inhaled or ingested following a major radiological accident. This is the basis for stockpiling it and distributing it to emergency workers and institutionalized persons during radiological emergencies. The petitioner believes that the distribution of KI was inadequate and untimely in the Ukraine and Belarus after the Chernobyl accident in 1986 and that this accounts for the increased incidence of thyroid cancer in these areas. He also argues that distribution of KI in Poland was timely and effective and that no similar increase in the incidence of thyroid cancer was seen. The Commission considered all of the above information in deciding to grant the petitioner's requested actions.

B. The Kemeny Commission criticized the failure to stockpile KI and recommended that regional stockpiles be established. The Kemeny Commission's report recognized that evacuation was not invariably the preferred response to an emergency and that even when evacuation was desirable, it might not be feasible. The Commission believes that prompt evacuation and/or sheltering are the generally preferred protective measures for severe reactor accidents. In developing the range of public protective actions for severe accidents at commercial nuclear power plants, evacuation and in-place sheltering provide adequate protection for the general public. The Commission believes that KI for the general public should not replace evacuation and sheltering, but supplement them.

C. The Federal Radiological Emergency Response Plan (FRERP) is the plan that would be used by the Federal Government to support State and local officials in responding to any peacetime radiological emergency. Such emergencies range from transportation accidents involving radioactive materials to terrorist events involving nuclear materials. The FRERP includes a range of protective actions commensurate with the risks associated with the range of emergencies for the

[12] This exception from waiver of sovereign immunity provides that:

Any claims based upon an act or omission of an employee of the Government, exercising due care, in the execution of a statute or regulation, whether or not such statute or regulation be valid, or based upon the exercise or performance or the failure to exercise or perform a discretionary function or duty on the part of a federal agency or an employee of the Government, whether or not the discretion involved be abused.

28 USC 2680(a). *United States* v. *Varig Airlines*, 467 U.S. 797, 808 (1984); *Berkovitz* v. *United States*, 486 U.S. 531 (1988).

general public and emergency workers. These protective actions include evacuation, sheltering, and the prophylactic use of stable iodine. With respect to protective actions for nuclear power plants, the NRC and FEMA have issued Draft Supplement 3 to NUREG–0654/FEMA–REP–1, Rev. 1, to provide updated guidance for the development of protective action recommendations for severe reactor accidents. This document emphasizes that prompt evacuation is the preferred protective action for actual or projected severe core damage accidents.

D. The Commission recognizes that in 1994 the Board of Governors of the IAEA adopted new International Basic Safety Standards. With respect to emergency planning, these standards provide, among other things, ''intervention levels for immediate protective action, including sheltering, evacuation, and iodine prophylaxis.'' It is important to note that each country bases its response plans on local and regional characteristics. For example, Italy and France, using the same international standards and guidelines, implement them differently.

E. Although the cost of KI tablets has doubled, the Commission agrees with the NRC staff estimate and other nations' experience, that the purchase of KI tablets is relatively inexpensive. KI-related costs increase when the cost of maintenance, distribution, and public education are considered. However, the overall cost is minimal when placed in the context of emergency planning and should not be a deterrent to stockpiling KI for use by the general public should State and local decision makers determine that the prophylactic use of KI as a supplement to evacuation and sheltering is appropriate.

F. The Commission believes that robust regional stockpiles should be established to enable use by States that have not established local stockpiles and wish to make use of KI in the event of a severe nuclear power plant accident.

Commission Decision To Fund KI

On June 30, 1997, the Commission voted to approve the NRC staff recommendation to endorse the FRPCC recommendations for the Federal Government to fund the purchase of potassium iodide (KI) for States at their request and endorsed the FRPCC recognition of the availability of the Federal stockpile of KI to State and local governments for purposes of mitigating the consequences of terrorist use of nuclear, biological, or chemical (NBC) weapons. At that time it was believed that the NRC was the likely Federal agency to fund the stockpiling. Historically, funding for State and local; emergency response planning has been the responsibility of those governments usually working with licensees and, absent Congressional funding specifically for this purpose, NRC is not prepared to fund stockpiling of KI.

Findings

Metric Policy

On October 7, 1992, the Commission published its final Policy Statement on Metrication. According to that policy, after January 7, 1993, all new regulations and major amendments to existing regulations were to be presented in dual units. The amendment to the regulations contains no units.

Environmental Assessment and Finding of No Significant Impact for Granting the Petition for Rulemaking Relating To the Use of Potassium Iodide (KI)

I. Introduction

On September 9, 1995, a petition for rulemaking (PRM 50–63) was filed with the NRC by Mr. Peter Crane. The petitioner requested that the NRC amend its emergency planning regulations to require that emergency plans specify a range of protective actions to include sheltering, evacuation, and the prophylactic use of KI.

In SECY 97–245, dated October 23, 1997, the staff provided three options for the Commission's consideration in order to resolve PRM 50–63.

On November 5, 1997, the Commission was briefed by the NRC staff, the Federal Emergency Management Agency (FEMA), and the petitioner regarding the options available for resolving the petition for rulemaking. During the meeting, the Commission invited the petitioner to submit a modification to his petition in order to address views he discussed during the meeting.

On November 11, 1997, the petitioner submitted a revision to his petition PRM 50–63A, which requested two things:

1. A statement clearly recommending stockpiling of KI as a ''reasonable and prudent'' measure, and
2. A proposed rule change to 10 CFR 50.47(b)(10) which would be accomplished by inserting the following sentence after the first sentence: ''In developing this range of actions, consideration has been given to evacuation, sheltering, and the prophylactic use of potassium iodide (KI), as appropriate.''

On June 26, 1998, the Commission disagreed with the staff recommendation to deny the petition for rulemaking PRM 50–63A by revising 10 CFR Part 50.47 (b)(10). This proposed rulemaking is in response to this directive.

Alternatives were essentially considered in previous documents. In SECY–97–124 (June 16, 1997), on the ''Proposed Federal Policy Regarding Use of Potassium Iodide after a Severe Accident at a Nuclear Power Plant.'' The staff identified three options, one of which contained three sub-options, concerning a proposed change in the Federal policy regarding the use of potassium iodide (KI) as a protective measure for the general public during severe reactor accidents. Next, in an SRM dated June 30, 1997, the Commission approved an option that endorsed the Federal offer to fund the purchase of KI for States at their request and endorsed the Federal Radiological Preparedness Coordinating Committee (FRPCC) recognition of the availability to State and local governments of the Federal stockpiling of KI.

II. Need for Action

In SECY–97–245, the staff proposed options for resolving the referenced petition for rulemaking. In SRM 98–061, the Commission directed the staff to proceed with the rulemaking.

III. Environmental Impact of the Proposed Action

The environmental impacts of the proposed action and its alternative are considered negligible by the NRC staff. Given the proposed action would only add the sentence: ''In developing this range of actions, consideration has been given to evacuation, sheltering, and the prophylactic use of potassium iodide (KI), as appropriate.'' The staff is not aware of any environmental impact as a result of this proposed action.

IV. Alternative to the Proposed Action

The alternative to the proposed action at this time is to deny the petitions and take no action with respect to the use of KI by the public. Should this no-action alternative be pursued, the staff is not aware of any resulting environmental impact.

V. Agencies and Persons Consulted

Cognizant personnel from the Federal Emergency Management Agency were consulted, as was the petitioner, as part of this rulemaking activity.

VI. Finding of No Significant Impact: Availability

The Commission has determined under the National Environmental Policy Act of 1969, as amended, and the Commission's regulations in Subpart A of 10 CFR Part 51, that the amendment is not a major Federal action

significantly affecting the quality of human environment, and therefore, an environmental impact statement is not required. This amendment will require that emergency plans specify a range of protective actions to include sheltering, evacuation, and the prophylactic use of KI. This action will not have a significant impact upon the environment.

Paperwork Reduction Act Statement

This proposal rule does not contain a new or amended information collection requirement subject to the Paperwork Reduction Act of 1995 (44 U.S.C 3501 *et seq.*). Existing requirements were approved by the Office of Management and Budget (OBM) approval numbers 3150–0009 and 3150–0011.

Public Protection Notification

If an information collection does not display a currently valid OMB control number, the NRC may not conduct or sponsor, and a person is not required to respond to, the information collection.

Regulatory Analysis of the Proposed Rulemaking Granting In Part A Petition for Rulemaking (PRM 50–63A) Relating to the Use of Potassium Iodide (KI)

On September 9, 1995, a petition for rulemaking (PRM 50–63) was filed with the NRC by Mr. Peter Crane. The petitioner requested that the NRC amend its emergency planning regulations to require that emergency plans specify a range of protective actions to include sheltering, evacuation, and the prophylactic use of KI.

In SECY 97–245, dated October 23, 1997, the staff provided three options for the Commission's consideration in order to resolve PRM 50–63.

On November 5, 1997, the Commission was briefed by the NRC staff, the Federal Emergency Management Agency (FEMA), and the petitioner regarding the options available for resolving the petition for rulemaking. During the meeting, the Commission invited the petitioners to submit a modification to his petition in order to address views he discussed during the meeting.

On November 11, 1997, the petitioner submitted a revision to his petition PRM 50–63A, which requested two things:

A statement clearly recommending stockpiling of KI as a ''reasonable and prudent'' measure, and

A proposed rule change to 10 CFR 50.47(b)(10) which would be accomplished by inserting the following sentence after the first sentence: ''In developing this range of actions, consideration has been given to evacuation, sheltering, and the prophylactic use of potassium iodide (KI), as appropriate.''

On June 26, 1998, the Commission directed the staff in SRM 98–061 to revise 10 CFR Part 50.47 (b)(10). This proposed rulemaking is in response to this directive.

Alternatives were essentially considered in previous documents. In SECY–97–124 (June 16, 1997), titled ''Proposed Federal Policy Regarding Use of Potassium Iodide after a Severe Accident at a Nuclear Power Plant,'' the staff identified three options, one of which contained three sub-options, concerning a proposed change in the Federal policy regarding the use of potassium iodide (KI) as a protective measure for the general public during severe reactor accidents. Next, in an SRM dated June 30, 1997, the Commission approved an option that endorsed the Federal offer to fund the purchase of KI for States at their request and endorsed Federal Radiological Preparedness Coordinating Committee (FRPCC) recognition of the availability to State and local governments of the Federal stockpiling of KI.

In SECY–97–245, the staff proposed options for resolving the referenced petition for rulemaking. In SRM 98–06, the Commission directed the staff to proceed with the rulemaking.

Given that the Commission considered the options and directed the staff to grant the petition, the only alternatives considered here are the Commission approved option and the baseline, no-action alternative.

The proposed rulemaking does not ''require'' anything of licensees, but States are to have shown ''consideration'' of the use of KI along with evacuation and sheltering as protective actions. It is estimated that 30 States will need to make this consideration. Further, the staff estimates that the labor needed by the States could range from a staff-week, to a half staff-year. The latter being the case if a State decided to hold hearings on the issue.

If one assumes an average hourly salary of $70 (this estimate includes benefits, pro-rated secretarial and managerial assistance, but not overhead), the range of estimates would be from $2800 to $63,000. Again using a base of 30 States, the range is from $84,000 to $1.9 million.

The Commission notes that when it amended its emergency planning regulations on November 3, 1980, the regulatory standards for emergency planning were a restatement of basic joint NRC–FEMA guidance to licensees and to State and local governments incorporated in NUREG–0654; FEMA–REP–1, ''Criteria for Preparation and Evaluation of Radiological Emergency Response Plans and Preparedness in Support of Nuclear Power Plants for Interim Use and Comment.'' This guidance was cited in the regulation and speaks to radioprotective drugs including their use by the general public including quantities, storage and means of distribution and State and local plans for decision making with respect to their use. The Commission removed the citations of the guidance from the regulation in 1987 but the guidance has continued in use for planning purposes and by the Federal agencies for evaluating emergency plans. As a result, it is believed that all of the affected States have at some point considered the use of KI. Some States have made the decision to stockpile KI. Thus, in practical terms, the projected costs will occur only in those States that have not elected to stockpile KI and choose stockpiling in light of the Chernobyl accident, recent international practice, and the NRC requirement to consider the use of KI.

It is difficult to estimate the benefit of a State's consideration to stockpile KI. However, we believe the benefit of such an action by the States is summed up by the petitioner who stated that the decision to stockpile KI should turn on whether, given the enormous consequences of being without KI in a major accident, the drug is a prudent measure; not on whether it will necessarily pay for itself over time. As the petitioner further noted, KI represents a kind of catastrophic-coverage insurance policy offering protection for events which, while they occur only rarely, can have such enormous consequences that it is sensible to take special precautions, especially where, as here, the cost of such additional precautions is relatively low.

As stated above, this analysis focuses on the rule being proposed as the result of a petition. Also, since the Commission has directed the staff to pursue the FRPCC results with respect to KI and has directed the staff to pursue the rulemaking, the regulatory analysis presented here is for the edification of the decision makers so they can make an informed decision on the proposed rule.

The above constitutes the regulatory analysis for this action.

Regulatory Flexibility Certification

In accordance with the Regulatory Flexibility Act of 1980, 5 U.S.C. 605(b), the Commission hereby certifies that this rule, if adopted, will not have a significant economic impact on a substantial number of small entities. This proposed rule would affect only

the licensees of nuclear power plants. These licensees, do not fall within the scope of the definition of ''small entities'' set forth in the Regulatory Flexibility Act. 5 U.S.C. 601, or the size standards adopted by the NRC (10 CFR 2.810).

Backfit Analysis

The definition of backfit, as set forth in 10 CFR 50.109(a)(1), is clearly directed at obligations imposed upon licensees (and applicants) and their facilities and procedures. Section 50.109(a)(1) defines a backfit as:

> * * * the modification of or addition to systems, structures, components, or design of a facility; or the design approval or manufacturing license for a facility; or the procedures or organization required to design, construct or operate a facility, any of which may result from a new or amended provision in the Commission rules or the imposition of a regulatory staff position interpreting the Commission rules that is either new or different from a previously applicable staff position * * *.

Section 50.109 is replete with references to ''facilities'' and ''licensees,'' which in their totality make clear that the rule is intended to apply to actions taken with respect to nuclear power plant licensees and the facilities they operate. *See* Section 50.109(a)(7), ''If there are two or more ways to achieve compliance with a license or the rules or orders of the Commission, or with written *licensee* commitments * * * then ordinarily the applicant or *licensee* is free to choose the way that best suits its purposes [emphasis added].'' This focus on licensees and their facilities is further confirmed by the Statement of Considerations accompanying the backfit rule, 53 FR 20603 (June 6, 1988), where the Commission stated that backfitting ''means measures which are intended to improve the safety of nuclear power reactors * * *.'' 53 FR at 20604. The nine factors to be considered under 10 CFR 50.109(c) further make clear that the rule is aimed at requirements on licensees and facilities. These include: ''(2) General description of the activity that would be required by the *licensee* or *applicant* in order to complete the backfit; * * * (5) Installation and continuing costs associated with the backfit, including the cost of *facility* downtime or the cost of construction delay; [and] (6) The potential safety impact of changes in plant or operational complexity. * * * [emphasis added]''

The proposed rule imposes no new requirements on licensees, nor does it alter procedures at nuclear facilities. Rather, it is directed to States or local governments—the entities with the authority to determine the appropriateness of the use of KI for their citizens—calling upon the governments to ''consider'' KI as one of the elements of their offsite emergency planning. Even as to states or local governments, it imposes no binding requirement to alter plans and procedures. Furthermore, the basic standard that emergency planning must include consideration of a range of protective actions, is already set forth in the existing wording of section 50.47(b)(10). On this basis, the proposed rule in reality does not impose new requirements on anyone. On a consideration of all of the above factors, no backfit is involved and no backfit analysis is required.

Commission precedent also makes clear that the proposed rule change does not constitute a backfit. The Commission's position was stated explicitly in 1987, when the last major change took place in emergency planning regulations. 52 FR 42078 (Nov. 3, 1987). The Commission's final notice of rulemaking on this rule involving the ''Evaluation of the Adequacy of Off-Site Emergency Planning for Nuclear Power Plants at the Operating License Review Stage Where State and Local Governments Decline to Participate in Off-Site Emergency Planning'' stated that the emergency planning rule change in question ''does not impose any new requirements on production or utilization facilities; it only provides an alternative method to meet the Commission's emergency planning regulations. The amendment therefore is not a backfit under 10 CFR 50.109 and a backfit analysis is not required.'' 52 FR at 42084. Likewise, when the Commission altered its emergency planning requirements in 1987 to change the timing requirements for full participation emergency exercises (a change that, as a practical matter, could be expected to result in licensees' modifying emergency preparedness-related procedures to accommodate exercise frequency changes), it stated: ''The final rule does not modify or add to systems, structures, components or design of a facility; the design approval or manufacturing license for a facility; or the procedures or organization required to design, construct, or operate a facility. Accordingly, no backfit analysis pursuant to 10 CFR 50.109 is required for this final rule.'' 52 FR 16828 (May 6, 1987). The proposed emergency planning rule change is of a similar nature and similarly does not involve a backfit.

It has been argued by at least one commenter on the petition for rulemaking that, although licensees are not directly burdened by the proposed rule, they would be indirectly burdened because they would feel called upon to explain the new policy to their customers. By this logic, almost any Commission action that led an NRC licensee to issue a press release could be considered a backfit. Such a position would represent unsound law and policy. Here, the burden of public information on licensees or applicants, if any, appears *de minimis*. It plainly does not rise to the level of the type of concrete burden contemplated by the Commission when it enacted the backfit rule. It might also be argued that, if a State or local government were to decide to stockpile and use KI for the general public, it would undertake interactions with the affected licensee to coordinate offsite emergency planning. Although this could result in some voluntary action by the licensee to coordinate its planning, the proposed rule itself does not impose any requirement or burden on the licensee. Accordingly, the Commission concludes that the proposed rule, if adopted, would not impose any backfits as defined in 10 CFR 50.109.

List of Subjects in 10 CFR Part 50

Antitrust, Classified Information, Criminal penalties, Fire protection, Intergovernmental relations, Nuclear power plants and reactors, Radiation protection, Reactor siting criteria, Reporting and recordkeeping requirements.

For the reasons set out in the preamble and under the authority of the Atomic Energy Act for 1954, as amended, the Energy Reorganization Act of 1974, as amended, the National Environmental Policy Act of 1969, as amended, and 5 U.S.C. 553, the NRC is proposing to adopt the following amendment to 10 CFR Part 50.

PART 50—DOMESTIC LICENSING OF PRODUCTION AND UTILIZATION FACILITIES

1. The authority citation for 10 CFR Part 50 continues to read as follows:

Authority: Secs. 102, 103, 104, 105, 161, 182, 183, 186, 189, 68 Stat. 936, 938, 948, 953, 954, 955, 956, as amended, sec. 234, 83 Stat. 444, as amended (42 U.S.C. 2132, 2133, 2134, 2135, 2201, 2232, 2233, 2239, 2282); secs. 201, as amended, 202, 206, 88 Stats. 1242, as amended 1244, 1246, (42 U.S.C. 5841, 5842, 5846).

Section 50.7 also issued under Pub. L. 95–601, sec. 10, 92 Stat. 2951, as amended by Pub. L. 102–486, sec. 2902, 106 Stat. 3123, (42 U.S.C. 5851). Sections 50.10 also issued under secs. 101, 185, 68 State. 936, 955, as amended (42 U.S.C. 2131, 2235); sec. 102,

Pub. L. 91–190, 83 Stat. 853 (42 U.S.C. 4332). Section 50.13, 50.54(dd), and 50.103 also issued under sec. 108, 68 Stat. 939, as amended (42 U.S.C. 2138). Sections 50.23, 50.35, 50.55, and 50.56 also issued under sec. 185, 68 Stat. 955 (42 U.S.C. 2235). Sections 50.33a, 50.55a and Appendix Q also issued under sec. 102, Pub. L. 91–190, 83 Stat. 853 (42 U.S.C. 4332). Sections 50.34 and 50.54 also issued under Pub. L. 97–415, 96 Stat. 2073 (42 U.S.C. 2239). Section 50.78 also issued under sec. 122, 68 Stat. 939 (42 U.S.C. 2152). Sections 50.80, 50.81 also issued under sec. 184, 68 Stat. 954, as amended (42 U.S.C. 2234). Appendix F also issued under sec. 187, 68 Stat. 955 (42 U.S.C. 2237).

2. In § 50.47, paragraph (b)(10) is revised to read as follows:

§ 50.47 Emergency plans.

* * * * *

(b) * * *

(10) A range of protective actions has been developed for the plume exposure pathway EPZ for emergency workers and the public. In developing this range of actions, consideration has been given to evacuation, sheltering, and, as a supplement to these, the prophylactic use of potassium iodide (KI), as appropriate. Guidelines for the choice of protective actions during an emergency, consistent with Federal guidance, are developed and in place, and protective actions for the ingestion exposure pathway EPZ appropriate to the locale have been developed.

* * * * *

Dated at Rockville, Maryland, this 3rd day of June, 1999.

For the Nuclear Regulatory Commission.

Annette Vietti-Cook,

Secretary of the Commission.

[FR Doc. 99–14584 Filed 6–11–99; 8:45 am]

BILLING CODE 7590–01–P

DEPARTMENT OF THE TREASURY

Office of the Comptroller of the Currency

12 CFR Parts 1, 5, and 7

[Docket No. 99–08]

RIN 1557–AB61

Investment Securities; Rules, Policies, and Procedures for Corporate Activities; and Interpretive Rulings

AGENCY: Office of the Comptroller of the Currency, Treasury.

ACTION: Notice of proposed rulemaking.

SUMMARY: The Office of the Comptroller of the Currency (OCC) is proposing to update and clarify its rules regarding Investment Securities, Corporate Activities, and Interpretive Rulings. Most of the proposed changes amend the OCC's regulation codifying interpretive rulings. These proposed amendments clarify certain existing interpretive rulings and add new interpretive rulings based on recent statutory changes, judicial rulings, OCC decisions, and other developments. The remaining proposed changes would clarify in the OCC's regulation on investment securities its long-standing treatment of instruments secured by Type I securities, and make technical amendments to the OCC's regulation on corporate activities to update the names of offices within the OCC, to clarify certain definitions, and to amend references to the CAMEL rating system to reflect the addition of the sixth element for sensitivity to market risk. This proposal reflects the OCC's continuing commitment to assess the effectiveness of our rules and to make further changes where necessary.

DATES: You should submit written comments by August 13, 1999.

ADDRESSES: You should direct written comments to the Communications Division, Attention: Docket No. 99–08, Third Floor, Office of the Comptroller of the Currency, 250 E Street, SW, Washington, DC 20219. In addition, you may send comments by facsimile transmission to (202) 874–5274, or by electronic mail to regs.comments@occ.treas.gov.

FOR FURTHER INFORMATION CONTACT: You can request additional information on this proposal by calling Jacqueline Lussier, Senior Attorney, or Mark Tenhundfeld, Assistant Director, Legislative and Regulatory Activities Division, (202) 874–5090. You can inspect and photocopy the comments at the OCC's Public Disclosure Room, First Floor, 250 E Street, SW, Washington, DC 20019, between 9:00 am and 5:00 pm on business days. You can make an appointment to inspect the comments by calling (202) 874–5043.

SUPPLEMENTARY INFORMATION:

Section-by-Section Analysis of Proposed Changes

As previously noted, most of the changes proposed amend part 7. The OCC proposes to amend part 7 to clarify and supplement its provisions where necessary. In addition, the OCC proposes to add new interpretive rulings, based on recent statutory changes, judicial rulings, OCC decisions, and other developments. These changes are described below, followed by a discussion of the proposed changes to parts 1 and 5.

Part 7—Interpretive Rulings

Messenger Service (§ 7.1012)

Under 12 U.S.C. 36(j), a ''branch'' of a bank is defined to include any branch bank where deposits are received, or checks paid, or money lent. Current § 7.1012(c) sets forth circumstances under which a national bank and its customers may use a messenger service for various purposes without the messenger service being deemed a ''branch'' under section 36. These criteria are derived from caselaw. However, the criteria do not reflect two recent federal court decisions.[1] This proposal amends § 7.1012(c) to reflect these recent cases.

Under the current rule, in order to avoid being treated as a bank branch, a messenger service, including both a messenger service affiliated with a bank and a service that is independent of a bank, generally must *both* make its services available to the public, including other depository institutions, *and* retain the ultimate discretion to determine which customers and geographic areas it will serve. 12 CFR 7.1012(c)(2)(ii)(A) and (B). The recent cases indicate that this test should apply differently depending on whether the service is affiliated with a bank. Pursuant to these cases, a nonaffiliated service need show only that it has the discretion to determine, in its own business judgment, which customers it will serve and where. In contrast, an affiliated service, because it may be more likely to favor its affiliates as a result of its common ownership or control, must show that it actually serves the public generally, including nonaffiliated depository institutions.

The OCC concludes that this analysis is appropriate when determining if a messenger service is a bank branch. Accordingly, the proposal combines the criteria in § 7.1012(c)(2)(ii)(A) and (c)(2)(ii)(B) into one new paragraph and applies the resulting criteria differently depending on whether or not the messenger service is affiliated with the bank. This means that a nonaffiliated messenger service need only demonstrate that it has the discretion to determine, in its own business judgment, whom it will serve and where. In contrast, since the operations of a messenger service that is affiliated

[1] *See Cades* v. *H & R Block,* 43 F.3d 869 (4th Cir. 1994), *cert. denied,* 515 U.S. 1103 (1995); *Christiansen* v. *Beneficial Nat'l Bank,* 972 F. Supp. 681 (S.D. Ga. 1997). These cases addressed the issue of whether a third party should be considered to be a branch of a national bank where a tax preparation company originated tax refund anticipation loans between a national bank and taxpayers and conveyed the loan proceeds to the customers.

with a bank could be influenced by that bank, an affiliated messenger service must continue to demonstrate both that it actually provide services to the general public, including nonaffiliated depository institutions, and that it has the discretion to determine whom it will serve and where.

The proposal also makes a stylistic amendment to § 7.1012(c)(2)(i) to state the rule more economically.

Independent Undertakings To Pay Against Documents (§ 7.1016)

Section 7.1016 codifies interpretations concerning the issuance by national banks of letters of credit and other independent undertakings. The proposal makes five technical amendments to update this section.

The first amendment changes footnote 1 by clarifying that the United Nations Convention on Independent Guarantees and Standby Letters of Credit was adopted by the U.N. General Assembly in 1995 and signed by the United States in 1997. The second amends footnote 1 by adding the recently finalized International Standby Practices (ISP–98) to the footnote as another important source of applicable laws or rules of practice recognized by law related to independent undertakings. The third amendment replaces the terms ''account party'' and ''customer'' in the text (which refer to the party for whose account an independent undertaking is issued) with the term ''applicant'' (which is the term used in the laws and rules of practice cited in the footnote) in § 7.1016(a), (b)(1)(iii)(C), and (b)(1)(iv). The fourth clarifies, in § 7.1016(b)(2)(ii), that the precautions taken when an independent undertaking is renewed apply only to automatic renewals. Renewals that are within a bank's discretion necessarily allow the bank to make a credit assessment before renewing. Finally, the fifth amendment updates one of the telephone numbers in the footnote.

National Bank as Guarantor or Surety on Indemnity Bond (§ 7.1017)

In recent rulemakings [2] that amended part 7 and part 28 (the OCC's rule on international banking activities), the provision on a national bank's guarantees of its foreign operations was relocated from former § 7.7012 to § 28.4(c) in order to consolidate the regulations governing international banking activities in one part of the OCC's regulations. No substantive change was made to the section relocated. However, because part 7 still has a section on national banks acting as guarantors (current § 7.1017) and because this section no longer addresses guarantees abroad, several people have asked whether a national bank still may guarantee the liabilities of its foreign operations. The answer is yes, and, to alleviate this apparent confusion, the proposal adds a cross-reference in § 7.1017 to § 28.4(c).

Ownership of Stock Necessary To Qualify as Director (§ 7.2005)

A national bank director must own a qualifying equity interest (qualifying shares) in a national bank or the company that controls that national bank. 12 U.S.C. 72; 12 CFR 7.2005. Current § 7.2005 codifies the OCC's guidance about the various ways in which a director may comply with the requirement.

The proposed revisions to § 7.2005(b)(4) codify guidance provided in OCC interpretive letters [3] approving buyback or repurchase agreements between shareholders and prospective directors. Generally, under a buyback agreement, the transferring shareholder sells shares of the bank or its holding company to a director subject to an agreement that the director will sell the shares back to the transferring shareholder when the director's service ends. This enables the director to own qualifying shares while permitting the transferring shareholder to prevent the transfer of the shares to unknown parties.

Consistent with these interpretive letters, proposed new paragraphs (b)(4)(ii), (iii), and (iv) of § 7.2005 state that a buyback agreement may give a director the option of transferring shares back to the transferring shareholder if the director no longer needs those shares to satisfy the ownership requirement. The transferring shareholder may retain a right of first refusal to reacquire the shares if the director seeks to transfer ownership to a third person. Further, a director may assign the right to receive dividends or distributions on the shares back to the original shareholder and execute an irrevocable proxy authorizing the original shareholder to vote the shares. This change will make it easier for banks, including community banks in particular, to attract qualified people to serve on bank boards.

Oath of Directors (§ 7.2008)

Current § 7.2008 provides guidance on the methods by which the oath of directors may be administered. However, this section does not provide instructions for the filing or retention of executed oaths, prompting questions about what a national bank should do with the executed oaths once they are obtained.

To respond to these requests for guidance, the proposal amends paragraph (c) of § 7.2008 so that it informs national banks to file the original executed oaths with the OCC and retain a copy in the bank's records in accordance with the instructions set forth in the Comptroller's Corporate Manual. This guidance is consistent with 12 U.S.C. 73, which states that each director's executed and subscribed oath must be transmitted to the Comptroller of the Currency and filed and preserved in the Comptroller's office for a period of 10 years.

The proposal also amends the last sentence in § 7.2008(b) to reflect the name for the manual currently in use, namely, the ''Comptroller's Corporate Manual.''

Acquisition and Holding of Shares as Treasury Stock (§ 7.2020)

Current § 7.2020 provides that a national bank has authority under 12 U.S.C. 24(Seventh) to acquire its outstanding shares and hold them as treasury stock to fulfill a legitimate corporate purpose, as long as the bank complies with the restrictions and procedures specified in 12 U.S.C. 59. The only guidance contained in current § 7.2020 on what qualifies as a legitimate corporate purpose is the statement that it is impermissible to acquire or hold treasury stock for speculation.

Several OCC interpretive letters [4] explain the term further, providing that ''legitimate corporate purpose'' includes: (a) holding shares in connection with an officer or employee stock option, bonus or repurchase plan; (b) holding shares for sale to a potential director to meet ''qualifying share'' requirements; (c) purchasing a director's qualifying shares upon his or her resignation or death if there is no ready

[2] 61 FR 4862 (Feb. 9, 1996) (amending part 7); 61 FR 19524 (May 2, 1996) (amending 12 CFR part 28).

[3] *See, e.g.*, Letter from Julie L. Williams, Chief Counsel (Mar. 31, 1997) (unpublished); Letter from Jonathan Rushdoony, Attorney (Mar. 27, 1986) (unpublished); Letter from Leslie G. Linville, Senior Attorney (Jan. 9, 1986) (unpublished). You can inspect and photocopy the unpublished OCC staff interpretive letters cited in this preamble (in redacted form) at the OCC's Public Disclosure Room, First Floor, 250 E Street, SW, Washington, DC 20219. You can make an appointment to inspect the letters by calling (202) 874–5043.

[4] *See, e.g.*, Interpretive Letter No. 825 (Mar. 16, 1998), *reprinted in* [1997–98 Transfer Binder] Fed. Banking L. Rep. (CCH) ¶ 81–274; Interpretive Letter No. 786 (June 9, 1997), *reprinted in* [1997 Transfer Binder] Fed. Banking L. Rep. (CCH) ¶ 81–213 (IL 786); Interpretive Letter No. 660 (Dec. 19, 1994), *reprinted in* [1994–95 Transfer Binder] Fed. Banking L. Rep. (CCH) ¶ 83,608 (IL 660).

market for the shares; (d) reducing the number of shareholders in order to qualify the bank for reorganization as a Subchapter S corporation; and (e) reducing the number of shareholders to lower the bank's costs associated with shareholder communications and meetings.

The proposal revises § 7.2020 to include these examples of legitimate corporate purposes. The examples listed are not exclusive. There may be additional circumstances under which a national bank's acquisition and holding of its shares as treasury stock will serve a legitimate corporate purpose. While the OCC expects that this guidance on what is a legitimate corporate purpose will benefit all national banks, certain of the examples listed as legitimate purposes (namely, the purchasing of shares upon a director's resignation or death if there is no ready market for the shares and qualifying the bank for treatment under the tax laws as a Subchapter S corporation) are expected to provide a particular benefit to community banks.

Reverse Stock Splits (Proposed New § 7.2023)

In IL 786, the OCC considered the appropriateness of a reverse stock split, a restructuring of ownership interests in which a national bank reduces the number of its outstanding shares of stock by, for instance, replacing outstanding shares with fewer shares of a new issuance and paying cash to the minority shareholders for their interests. That opinion determined that the national banking laws permit a reverse stock split, as long as the bank provides adequate protection for dissenting shareholders' rights and the transaction serves a legitimate corporate purpose.

Because the reverse stock split is a device that post-dates most corporate governance provisions in the national banking laws, those laws do not explicitly address the authority of a national bank to effect a reverse stock split. Several provisions of the banking laws—including 12 U.S.C. 59, 83, 214a, 215, and 215a—authorize components of a reverse stock split that, when read together, permit the transaction. One provision (12 U.S.C. 59) permits a national bank to reduce its capital upon the vote of shareholders holding two-thirds of its capital stock and OCC approval. Other provisions (12 U.S.C. 214a, 215, and 215a) authorize a national bank to engage in corporate combinations, including mergers and consolidations, although the bank must provide rights to shareholders dissenting to these transactions. Another provision (12 U.S.C. 83) allows national banks to hold treasury stock for legitimate corporate purposes after obtaining OCC approval pursuant to section 59.[5] The OCC also recognizes that a bank may acquire its outstanding shares and hold them as treasury stock in connection with a reverse stock split.

In light of this statutory authority, IL 786 concluded that a reverse stock split is permissible if the action serves a legitimate corporate purpose (in the case discussed in IL 786, a desire to reduce the number of shareholders to qualify for Subchapter S status) and dissenters' rights are adequately protected.[6] The proposal codifies this conclusion in new § 7.2023. This conclusion is expected to benefit all national banks by clarifying the extent of their flexibility in restructuring their ownership interests, but it is expected to provide particular benefit to community banks that desire, for instance, to restructure in order to qualify as a Subchapter S corporation.

Visitorial Powers (§ 7.4000)

The proposal revises § 7.4000, ''Books and records of national banks,'' to clarify the extent of the OCC's visitorial powers under 12 U.S.C. 484 and other federal statutes. Section 484 provides, in relevant part, that no national bank is subject to any visitorial powers except as authorized by federal law. 12 U.S.C. 484(a).[7] Congress vested the OCC with exclusive visitorial powers to ensure the cohesive, uniform supervision of national banks.

Courts have defined ''visitation'' expansively to include the inspection, regulation, or control of the operations of a bank to enforce the bank's observance of the law. *See First National Bank of Youngstown* v. *Hughes,* 6 F. 737, 740 (6th Cir. 1881), *appeal dismissed,* 106 U.S. 523 (1883). *See also Peoples Bank* v. *Williams,* 449 F. Supp. 254 (W.D. Va. 1978) (visitorial powers involve the exercise of the right of inspection, superintendence, direction, or regulation over a bank's affairs).[8]

Proposed § 7.4000 codifies the definition of visitorial powers and illustrates what visitorial powers include by providing a non-exclusive list of these powers. They include: (a) examination of a bank; (b) inspection of a bank's books and records; (c) regulation and supervision of activities authorized or permitted under federal banking law; and (d) enforcing compliance with any applicable federal or state laws concerning those activities. The proposal also retitles § 7.4000 as ''Visitorial powers'' to reflect the rule's intended focus.

The proposal also reorganizes § 7.4000 by grouping together, in proposed paragraph (b), the exceptions noted in several different places in the current rule that are explicitly provided by federal law to the OCC's exclusive visitorial powers. These exceptions do not preclude the OCC from exercising its concurrent authority to inspect a national bank's books and records in the instances listed. This reorganization of the exceptions in the current rule is done solely for ease of reference. None of the exceptions listed is new, and the list is not exclusive.[9]

---

[5] *See* IL 660.

[6] This conclusion is consistent with the most recent applicable court decision, *NoDak Bancorp.* v. *Clarke,* 998 F.2d 1416 (8th Cir. 1993), in which the court upheld the OCC's approval of a cash-out merger in which the OCC found that there was a valid corporate purpose for the transaction and that minority shareholders were entitled to dissenters' rights. In an earlier decision, the Eleventh Circuit found in *Lewis* v. *Clark,* 911 F.2d 1558 (11th Cir. 1990), reh'g denied, 972 F.2d 1351 (1991), that the OCC lacked the authority to approve a bank merger that required minority shareholders to accept cash for their shares while the majority shareholders were eligible to receive stock in the resulting bank, even where the minority shareholders had appraisal rights. The *NoDak* court distinguished *Lewis* v. *Clark,* finding that a national bank could cash out minority shareholders under the National Bank Act, as long as there is a valid business purpose and the minority shareholders are entitled to dissenters' rights.

In *Bloomington Nat'l Bank* v. *Telfer,* 916 F.2d 1305 (7th Cir. 1990), the court reversed the OCC's approval of a reverse stock split. The court held that the reverse stock split plan violated 12 U.S.C. 83 and 214a-215a, after concluding that the transaction had no legitimate business purpose and failed to provide for dissenters' right. The court expressly declined to answer whether section 83 prohibits all reverse stock split transactions, noting that its opinion was limited to the facts of the case. Id. at 1308 n.4, 1309. To clarify how the OCC applies the governing law in light of these decisions, the proposal reflects the OCC's position that the better reasoned view in the federal courts is that reverse stock splits will be approved if there is a legitimate corporate purpose and if shareholders are provided adequate dissenters' rights.

[7] The term ''visitorial,'' as used in section 484, derives from English common law, which used the term ''visitation'' to refer to the act of a superintending officer who visits a corporation to examine its manner of conducting business and enforce observance of the laws and regulations. *Guthrie* v. *Harkness,* 199 U.S. 148, 158 (1905) (*quoting First National Bank of Youngstown* v. *Hughes,* 6 F. 737 (6th Cir. 1881)). The *Guthrie* court noted that visitors ''have power to keep [corporations] within the legitimate sphere of their operations, and to correct all abuses of authority, and to nullify all irregular proceedings.'' *Id.* For purposes of section 484, the term has been construed broadly, as discussed in the text following this footnote.

[8] Recently, a federal district court upheld the OCC's right to exercise exclusive regulatory authority to enforce applicable state law against national banks when it enjoined a state banking authority's administrative enforcement proceeding against two national banks. Ruling on Motion for Preliminary Injunction, *First Union Nat'l Bank* v. *Burke,* No. 3:98cv2171 (D. Ct. Apr. 7, 1999) (appeal pending).

[9] The exceptions listed in the rule are those where federal statutory law explicitly provides for another

Continued

Establishment and Operation of Remote Service Units (Proposed New § 7.4003)

The authority of national banks to establish ''branches'' in a state is linked to the extent that state law authorizes state banks to establish branches. *See* 12 U.S.C. 36(c)–(g). Branches are the only national bank facilities that are subject to state geographic restrictions or related approval requirements under 12 U.S.C. 36. The national bank branching statute, at 12 U.S.C. 36(j), defines a ''branch'' to include any branch bank, branch office, branch agency, additional office, or any branch place of business located in any state at which deposits are received, checks paid, or money lent. Section 36(j) explicitly excludes, however, an automated teller machine (ATM) or remote service unit (RSU) [10] from the definition of ''branch.'' [11] In light of the exclusion of ATMs and RSUs from 12 U.S.C. 36(j), the OCC has concluded in recent interpretive letters [12] that ATMs and RSUs established and operated by national banks are not subject to any state-imposed geographic or operational restrictions or licensing laws.

Proposed new § 7.4003 codifies the principle, reflected in those interpretive letters and other OCC interpretations [13] that automated loan machines (ALMs) and automated devices for receiving deposits are appropriately considered to be RSUs and, accordingly, are not subject to any state-imposed geographic or operational restrictions or licensing laws. As previously noted, RSUs are automated facilities, operated by customers of a bank, that receive deposits, pay withdrawals, or lend money. Similarly, ALMs and automated deposit-receiving devices are automated facilities, operated by bank customers, that permit a customer, in the case of an ALM, to apply for a loan and receive the loan proceeds or have them deposited into the customer's existing account or, in the case of the deposit-receiving device, make deposits. ALMs and automated deposit-receiving devices qualify under this standard as RSUs and, therefore, are regulated in the same way as other RSUs.

Deposit Production Offices (Proposed New § 7.4004)

A national bank facility that does not receive deposits, pay checks, or lend money is not a branch for purposes of 12 U.S.C. 36(j). The OCC has determined that a national bank deposit production office (DPO), which merely assists bank customers in making deposits, is not a branch because it does not engage in any of the core banking functions that would cause it to be a branch under 12 U.S.C. 36.[14]

Proposed new § 7.4004 codifies this interpretation. Paragraph (a) states that a DPO must not receive deposits in order for it to be excluded from 12 U.S.C. 36(j)'s definition of ''branch,'' and that all deposit and withdrawal transactions by customers using a DPO must be performed by the customer, either in person at the main office or a branch office of the bank, or by mail, electronic transfer, or a similar method of transfer. Paragraph (b) states that a national bank may use the services of, and compensate, persons not employed by the bank for its deposit production activities. This flexibility to operate a DPO with people other than bank employees is consistent with the approach taken with respect to national bank loan production offices (LPOs). *See* 12 CFR 7.1004.

Combination of LPO, DPO, and RSU (Proposed New § 7.4005)

When a facility combines the non-branch functions of an LPO, DPO, and RSU, the OCC has concluded that the facility is not a branch by virtue of that combination.[15] Since an LPO, DPO, or RSU is not, individually, a branch under 12 U.S.C. 36(j), it follows that any combination of these facilities at one location also would not be a branch. The proposal adds this interpretation in new § 7.4005.

Part 1—Investment Securities

The OCC proposes to amend 12 CFR 1.3(e)(1) to clarify a provision that has led to some confusion. Current § 1.3(e)(1) sets forth the regulatory treatment of Type IV securities that are fully secured by Type I securities. The OCC proposes to eliminate the statement in § 1.3(e)(1) that a national bank may deal in Type IV securities that are fully secured by Type I securities. This language has led to confusion about the treatment of Type V securities and about the relationship of the current provision with § 1.3(g) regarding securitization. Consistent with previous judicial rulings and OCC decisions,[16] the OCC will continue to apply its long-standing regulatory treatment of asset-backed instruments that are fully secured by Type I securities and treat those instruments as Type I securities.

Part 5—Rules, Policies, and Procedures for Corporate Activities

In 1996, the interagency Uniform Financial Institutions Rating System—

agency to inspect a national bank's books and records. In addition, the OCC does not object to state insurance regulators inspecting the records of national banks related to their insurance activities that are regulated under applicable state law.

[10] An RSU is an automated facility, operated by a customer of a bank, that engages in one or more of the core banking functions of receiving deposits, paying withdrawals, or lending money. An RSU includes ATMs, automated loan machines, and automated devices for receiving deposits, and may be equipped with a telephone or televideo device that allows contact with bank personnel.

[11] This exclusion was added to section 36(j) by the Economic Growth and Regulatory Paperwork Reduction Act of 1996 (EGRPRA), Pub. L. 104–208, sec. 2205, enacted Sept. 30, 1996 (110 Stat. 3009).

[12] *See, e.g.,* Interpretive Letter No. 789 (June 27, 1997), *reprinted in* [1997 Transfer Binder] Fed. Banking L. Rep. (CCH) ¶ 81–216 (IL 789); Interpretive Letter No. 772 (Mar. 6, 1997), *reprinted in* [1996–97 Transfer Binder] Fed. Banking L. Rep. (CCH) ¶ 81–136 (IL 772).

[13] Interpretive Letter No. 838 (April 15, 1998), *reprinted in* [Current Transfer Binder] Fed. Banking L. Rep. (CCH) ¶ 81–293; Interpretive Letter No. 821 (Feb. 17, 1998), *reprinted in* [Current Transfer Binder] Fed. Banking L. Rep. (CCH) ¶ 81–271; IL 789; IL 772. Despite the plain language of section 36(j), one federal district court case, *Bank One, Utah* v. *Guttau,* Civil No. 4–98–CV–10247 (D. Iowa July 24, 1998), has held that Iowa ATM law is not preempted by the National Bank Act. This holding is on appeal to the Eighth Circuit.

[14] Interpretive Letter No. 691 (Sept. 25, 1995), *reprinted in* [1995–96 Transfer Binder] Fed. Banking L. Rep. (CCH) ¶ 81–006 (deposit production offices are not branches as long as deposits are not accepted at the DPO but rather are mailed by the customer to the bank after filling out preliminary forms at the DPO); Interpretive Letter No. 638 (Jan. 6, 1994), *reprinted in* [1993–94 Transfer Binder] Fed. Banking L. Rep. (CCH) ¶ 83,525 (a non-branch facility may perform deposit origination functions such as providing information on deposit products or handling application forms, as long as the activity stops short of actually receiving deposits).

[15] Interpretive Letter No. 843 (Sept. 29, 1998), *reprinted in* [Current Transfer Binder] Fed. Banking L. Rep. (CCH) ¶ 81–298 (IL 843). The proposal also reflects the position the OCC has taken as *amicus curiae* in litigation pending in the Federal District Court of Colorado in a case with substantially similar facts as those in IL 843. *See* OCC's Brief *Amicus Curiae* filed in *First Nat'l Bank of McCook* v. *Fulkerson,* Civil Action No. 98– D–1024 (filed Jan. 4, 1999).

[16] *See Security Pacific* v. *Clarke,* 885 F.2d 1034 (2d Cir. 1989), *cert. denied,* 493 U.S. 1070 (1990) (national bank authority to securitize assets); Interpretive Letter No. 514 (May 5, 1990), *reprinted in* [1990–91 Transfer Binder] Fed. Banking L. Rep. (CCH) ¶ 83,218 (bonds collateralized by Gov't Nat'l Mortgage Ass'n (GNMA), Fed. Nat'l Mortgage Ass'n (FNMA) and Fed. Home Loan Mortgage Ass'n (FHLMC) pass-through certificates); Interpretive Letter No. 362 (May 22, 1986), *reprinted in* [1985–87 Transfer Binder] Fed. Banking L. Rep. (CCH) ¶ 85,532 (issuing, underwriting and dealing in evidences of indebtedness collateralized by GNMA, FNMA or FHLMC certificates); Interpretive Letter No. 378 (April 24, 1987), *reprinted in* [1988–89 Transfer Binder] Fed. Banking L. Rep. (CCH) ¶ 85,602 (issuance and sale of collateralized mortgage obligations—bonds representing interests in pools of mortgages or mortgage-related obligations); Interpretive Letter No. 257 (April 12, 1983), *reprinted* in [1983–84 Transfer Binder] Fed. Banking L. Rep. (CCH) ¶ 85,421 (underwriting and dealing in mortgage-backed pass-through certificates evidencing undivided interests in Fed. Housing Admin. insured mortgage pools purchased by the bank from GNMA); Investment Securities Letter No. 29 (Aug. 3, 1988), *reprinted in* [1988–89 Transfer Binder] Fed. Banking L. Rep. (CCH) ¶ 85,899 (investment limits for asset-backed securities consisting of General Motors Acceptance Corp. receivables).

then commonly referred to as the CAMEL rating system [17]—was updated to add a sixth component, addressing sensitivity to market risk. [18] To reflect the addition of that sixth component, the acronym CAMEL was changed to CAMELS. In a recent rulemaking [19] that amended 12 CFR part 3 (the OCC's rule on minimum capital ratios), the OCC made the conforming amendment by changing ''CAMEL'' to ''CAMELS'' in § 3.6(c). However, the other OCC regulation in which the term CAMEL is used, part 5, was not updated concurrently.

This proposal changes the references to CAMEL in several sections of part 5 to CAMELS, reflecting, as discussed in the preceding paragraph, the recent addition of ''sensitivity to market risk'' to the Uniform Financial Institutions Rating System. The proposal also contains technical amendments to several sections in part 5 to conform them to provisions in the Comptroller's Corporate Manual that have been revised since part 5 last was amended. Finally, the proposal makes a technical amendment to § 5.35(g)(3) to correct an error in a reference to another paragraph of § 5.35.

Request for Comments

The OCC invites comment on any of the proposed changes.

The OCC also seeks comments on the impact of each proposal on community banks. The OCC recognizes that community banks operate with more limited resources than larger institutions and may present a different risk profile. Thus, the OCC specifically requests comments on the impact of each proposal on community banks' current resources and available personnel with the requisite expertise, and whether the goals of the proposed regulation could be achieved, for community banks, through an alternative approach.

Executive Order 12866 and the President's memorandum of June 1, 1998, require each agency to write all rules in plain language. We invite your comments on how to make this proposed rule easier to understand. For example:

- Have we organized the material to suit your needs?
- Are the requirements in the rule clearly stated?
- Does the rule contain technical language or jargon that isn't clear?
- Would a different format (grouping and order of sections, use of headings, paragraphing) make the rule easier to understand?
- Would more (but shorter) sections be better?
- What else could we do to make the rule easier to understand?

Regulatory Flexibility Act

Pursuant to section 605(b) of the Regulatory Flexibility Act, 5 U.S.C. 605(b), the OCC hereby certifies that this proposal will not have a significant economic impact on a substantial number of small entities. As is discussed more fully in the preamble to this proposal, the proposal clarifies and updates 12 CFR parts 1, 5, and 7. The proposal imposes no new requirements on national banks. Accordingly, a regulatory flexibility analysis for the proposal is not required.

Executive Order 12866

The OCC has determined that this proposal is not a significant regulatory action under Executive Order 12866.

Unfunded Mandates Reform Act of 1995

Section 202 of the Unfunded Mandates Reform Act of 1995, 2 U.S.C. 1532 (Unfunded Mandates Act), requires that the agency prepare a budgetary impact statement before promulgating any rule likely to result in a federal mandate that may result in the expenditure by state, local, and tribal governments, in the aggregate, or by the private sector, of $100 million or more in any one year. If a budgetary impact statement is required, section 205 of the Unfunded Mandates Act also requires the agency to identify and consider a reasonable number of regulatory alternatives before promulgating the rule.

The OCC has determined that this proposal will not result in expenditures by state, local, and tribal governments, or by the private sector, of $100 million or more in any one year. Accordingly, the OCC has not prepared a budgetary impact statement or specifically addressed any regulatory alternatives. The proposal is clarifying in nature and imposes no new requirements on national banks.

List of Subjects

12 CFR Part 1

Banks, banking, National banks, Reporting and recordkeeping requirements, Securities.

12 CFR Part 5

Administrative practice and procedure, National banks, Reporting and recordkeeping requirements, Securities.

12 CFR Part 7

Credit, Insurance, Investments, National banks, Reporting and recordkeeping requirements, Securities, Surety bonds.

Authority and Issuance

For the reasons set out in the preamble, chapter I of title 12 of the Code of Federal Regulations is proposed to be amended as follows:

PART 1—INVESTMENT SECURITIES

1. The authority citation for part 1 continues to read as follows:

Authority: 12 U.S.C. 1 *et seq.*, 24 (Seventh), and 93a.

2. In § 1.3, paragraph (e)(1) is revised to read as follows:

§ 1.3 Limitations on dealing in, underwriting, and purchase and sale of securities.

* * * * *

(e) *Type IV securities*—(1) *General.* A national bank may purchase and sell Type IV securities for its own account. Except as described in paragraph (e)(2) of this section, the amount of the Type IV securities that a bank may purchase and sell is not limited to a specified percentage of the bank's capital and surplus.

* * * * *

PART 5—RULES, POLICIES, AND PROCEDURES FOR CORPORATE ACTIVITIES

3. The authority citation for part 5 continues to read as follows:

Authority: 12 U.S.C. 1 *et seq.*, 93a.

4. In § 5.3, paragraph (c) is revised and paragraph (g)(2) is amended by revising the term ''(CAMEL)'' to read ''(CAMELS)'', to read as follows:

§ 5.3 Definitions.

* * * * *

(c) *Appropriate district office* means:

(1) Bank Organization and Structure for all national bank subsidiaries of certain holding companies assigned to the Washington, D.C., licensing unit;

(2) The appropriate OCC district office for all national bank subsidiaries of certain holding companies assigned to a district office licensing unit;

(3) The OCC's district office where the national bank's supervisory office is located for all other banks; or

[17] The rating system was referred to as the CAMEL rating system because it assessed five components of a bank's performance: capital adequacy, asset quality, management administration, earnings, and liquidity.

[18] 61 FR 67021 (Dec. 19, 1996).

[19] 64 FR 10194 (Mar. 2, 1999).

(4) The OCC's International Banking and Finance Department for federal branches and agencies of foreign banks.

* * * * *

§ 5.11 [Amended]

5. In § 5.11, paragraph (i)(1) is amended by revising the phrase ''a representative of the OCC'' to read ''presiding officer''.

6. In § 5.33, paragraph (d)(2)(i) is revised to read as follows:

§ 5.33 Business combinations.

* * * * *

(d) * * *

(2) * * *

(i) A business combination between eligible banks, or between an eligible bank and an eligible depository institution, that are controlled by the same holding company or that will be controlled by the same holding company prior to the combination; or

* * * * *

§ 5.35 [Amended]

7. In § 5.35, paragraph (g)(3) is amended by revising the term ''paragraph (h)'' to read ''paragraph (i)''.

§ 5.37 [Amended]

8. In § 5.37, paragraphs (d)(1)(i) and (d)(3) are amended by revising the term ''district'' to read ''supervisory'', and paragraph (d)(3) is amended further by revising the term ''(CAMEL)'' to read ''(CAMELS)''.

§ 5.51 [Amended]

9. In § 5.51, paragraph (c)(6)(i) is amended by revising the term ''(CAMEL)'' to read ''(CAMELS)''.

§ 5.64 [Amended]

10. In § 5.64, paragraph (b) is amended by revising the term ''district'' to read ''supervisory''.

PART 7—INTERPRETIVE RULINGS

11. The authority citation for part 7 continues to read as follows:

Authority: 12 U.S.C. 1 *et seq.* and 93a.

12. In § 7.1012, paragraphs (c)(2)(i) and (c)(2)(ii) are revised and paragraphs (c)(2)(iii), (c)(2)(iv), (c)(2)(v), and (c)(2)(vi) are added to read as follows:

§ 7.1012 Messenger service.

* * * * *

(c) * * *

(2) * * *

(i) A party other than the national bank owns or rents the messenger service and its facilities and employs the persons who provide the service;

(ii)(A) The messenger service retains the discretion to determine in its own business judgment which customers and geographic areas it will serve; or

(B) If the messenger service and the bank are under common ownership or control, the messenger service actually provides its services to the general public, including other depository institutions, and retains the discretion to determine in its own business judgment which customers and geographic areas it will serve;

(iii) The messenger service maintains ultimate responsibility for scheduling, movement, and routing;

(iv) The messenger service does not operate under the name of the bank, and the bank and the messenger service do not advertise, or otherwise represent, that the bank itself is providing the service, although the bank may advertise that its customers may use one or more third party messenger services to transact business with the bank;

(v) The messenger service assumes responsibility for the items during transit and for maintaining adequate insurance covering thefts, employee fidelity, and other in-transit losses; and

(vi) The messenger service acts as the agent for the customer when the items are in transit. The bank deems items intended for deposit to be deposited when credited to the customer's account at the bank's main office, one of its branches, or another permissible facility, such as a back office facility that is not a branch. The bank deems items representing withdrawals to be paid when the items are given to the messenger service.

* * * * *

13. In § 7.1016, paragraphs (a) including the footnote, (b)(1)(iii)(C), (b)(1)(iv), and (b)(2)(ii) are revised to read as follows:

§ 7.1016 Independent undertakings to pay against documents.

(a) *General authority.* A national bank may issue and commit to issue letters of credit and other independent undertakings within the scope of the applicable laws or rules of practice recognized by law.[1] Under such letters of credit and other independent undertakings, the bank's obligation to honor depends upon the presentation of specified documents and not upon nondocumentary conditions or resolution of questions of fact or law at issue between the applicant and the beneficiary. A national bank may also confirm or otherwise undertake to honor or purchase specified documents upon their presentation under another person's independent undertaking within the scope of such laws or rules.

(b) * * *

(1) * * *

(iii) * * *

(C) Entitle the bank to cash collateral from the applicant on demand (with a right to accelerate the applicant's obligations, as appropriate); and

(iv) The bank either should be fully collateralized or have a post-honor right of reimbursement from the applicant or from another issuer of an independent undertaking. Alternatively, if the bank's undertaking is to purchase documents of title, securities, or other valuable documents, the bank should obtain a first priority right to realize on the documents if the bank is not otherwise to be reimbursed.

(2) * * *

(ii) In the event that the undertaking provides for automatic renewal, the terms for renewal should be consistent with the bank's ability to make any necessary credit assessments prior to renewal;

* * * * *

14. In § 7.1017, the introductory text is revised to read as follows:

§ 7.1017 National bank as guarantor or surety on indemnity bond.

A national bank may lend its credit, bind itself as a surety to indemnify another, or otherwise become a guarantor (including, pursuant to 12 CFR 28.4, guaranteeing the deposits and other liabilities of its Edge corporations and Agreement corporations and of its corporate instrumentalities in foreign countries), if:

* * * * *

15. In § 7.2005, paragraph (b)(4) is revised to read as follows:

§ 7.2005 Ownership of stock necessary to qualify as director.

* * * * *

(b) * * *

(4) *Other arrangements*—(i) *Shares held through retirement plans and similar arrangements.* A director may

[1] Samples of such laws or rules of practice include, but are not limited to: the applicable version of Article 5 of the Uniform Commercial Code (UCC) (1962, as amended 1990) or revised Article 5 of the UCC (as amended 1995) (available from West Publishing Co., 1/800/328–4880); the Uniform Customs and Practice for Documentary Credits (International Chamber of Commerce (ICC) Publication No. 500) (available from ICC Publishing, Inc., 212/206–1150); the International Standby Practices (ISP–98) (available from the Institute of International Banking Law & Practice, 301/869–9840); the United Nations Convention on Independent Guarantees and Standby Letters of Credit (adopted by the U.N. General Assembly in 1995 and signed by the U.S. in 1997) (available from the U.N. Commission on International Trade Law, 212/963–5353); and the Uniform Rules for Bank-to-Bank Reimbursements Under Documentary Credits (ICC Publication No. 525) (available from ICC Publishing, Inc., 212/206–1150); as any of the foregoing may be amended from time to time.

hold his or her qualifying interest through a profit-sharing plan, individual retirement account, retirement plan, or similar arrangement, if the director retains beneficial ownership and legal control over the shares.

(ii) *Shares held subject to buyback agreements.* A director may acquire and hold his or her qualifying interest pursuant to a stock repurchase or buyback agreement with a transferring shareholder under which the director purchases the qualifying shares subject to an agreement that the transferring shareholder will repurchase the shares when, for any reason, the director ceases to serve in that capacity. The agreement may give the transferring shareholder a right of first refusal to repurchase the qualifying shares if the director seeks to transfer ownership of the shares to a third person.

(iii) *Assignment of right to dividends or distributions.* A director may assign the right to receive all dividends or distributions on his or her qualifying shares to another, including a transferring shareholder, if the director retains beneficial ownership and legal control over the shares.

(iv) *Execution of proxy.* A director may execute a revocable or irrevocable proxy authorizing another, including a transferring shareholder, to vote his or her qualifying shares, provided the director retains beneficial ownership and legal control over the shares.

* * * * *

16. In § 7.2008, the last sentence of paragraph (b) is revised and a new paragraph (c) is added to read as follows:

§ 7.2008 Oath of directors.

* * * * *

(b) *Execution of the oath.* * * * Appropriate sample oaths are located in the ''Comptroller's Corporate Manual.''

(c) *Filing and recordkeeping.* A national bank must file the original executed oaths of directors with the OCC and retain a copy in the bank's records in accordance with the Comptroller's Corporate Manual filing and recordkeeping instructions for executed oaths of directors.

17. Section 7.2020 is revised to read as follows:

§ 7.2020 Acquisition and holding of shares as treasury stock.

(a) *Acquisition of outstanding shares.* Under 12 U.S.C. 59, a national bank may acquire its outstanding shares and hold them as treasury stock, if the acquisition and retention of the shares is, and continues to be, for a legitimate corporate purpose.

(b) *Legitimate corporate purpose.* Examples of legitimate corporate purposes include the acquisition and holding of treasury stock to:

(1) Have shares available for use in connection with employee stock option, bonus, purchase, or similar plans;

(2) Sell to a director for the purpose of acquiring qualifying shares;

(3) Purchase a director's qualifying shares upon the cessation of the director's service in that capacity if there is no ready market for the shares;

(4) Reduce the number of shareholders in order to qualify as a Subchapter S corporation; or

(5) Reduce costs associated with shareholder communications and meetings.

(c) *Other purposes.* Purposes other than those enumerated in paragraph (b) of this section may satisfy the legitimate corporate purpose test.

(d) *Prohibition.* It is not a legitimate corporate purpose to acquire or hold treasury stock on speculation about changes in its value.

18. A new § 7.2023 is added to subpart B to read as follows:

§ 7.2023 Reverse stock splits.

(a) *Authority to engage in reverse stock splits.* A national bank may engage in a reverse stock split if the transaction serves a legitimate corporate purpose and provides adequate dissenting shareholders' rights.

(b) *Legitimate corporate purpose.* Examples of legitimate corporate purposes include a reverse stock split to:

(1) Reduce the number of shareholders in order to qualify as a Subchapter S corporation; or

(2) Reduce costs associated with shareholder communications and meetings.

19. In § 7.4000, the section heading and paragraphs (a) and (b) are revised to read as follows:

§ 7.4000 Visitorial powers.

(a) *General rule.* (1) Only the OCC or an authorized representative of the OCC may exercise visitorial powers with respect to national banks, except as otherwise expressly provided by federal law. State officials may not exercise visitorial powers with respect to national banks, such as conducting examinations, inspecting or requiring the production of books or records of national banks, or prosecuting enforcement actions, except in limited circumstances authorized by federal law. Production of records may, however, be required under normal judicial procedures.

(2) For purposes of this section, visitorial powers include:

(i) Examination of a bank;

(ii) Inspection of a bank's books and records;

(iii) Regulation and supervision of activities authorized or permitted pursuant to federal banking law; or

(iv) Enforcing compliance with any applicable federal or state laws concerning those activities.

(b) *Exceptions to the general rule.* Federal law expressly provides special authority for state or other federal officials to:

(1) Inspect the list of shareholders, provided the official is authorized to assess taxes under state authority (12 U.S.C. 62; this section also authorizes inspection of the shareholder list by shareholders and creditors of a national bank);

(2) Review, at reasonable times and upon reasonable notice to a bank, the bank's records solely to ensure compliance with applicable state unclaimed property or escheat laws upon reasonable cause to believe that the bank has failed to comply with those laws (12 U.S.C. 484(b));

(3) Verify payroll records for unemployment compensation purposes (26 U.S.C. 3305(c));

(4) Ascertain the correctness of federal tax returns (26 U.S.C. 7602); or

(5) Enforce the Fair Labor Standards Act (29 U.S.C. 211).

* * * * *

20. A new § 7.4003 is added to read as follows:

§ 7.4003 Establishment and operation of a remote service unit by a national bank.

A remote service unit (RSU) is an automated facility, operated by a customer of a bank, that conducts banking functions, such as receiving deposits, paying withdrawals, or lending money. A national bank may establish and operate an RSU pursuant to 12 U.S.C. 24 (Seventh). An RSU includes an automated teller machine, automated loan machine, and automated device for receiving deposits. An RSU may be equipped with a telephone or televideo device that allows contact with bank personnel. An RSU is not considered a ''branch'' within the meaning of 12 U.S.C. 36(j), and is not subject to state geographic or operational restrictions or licensing laws.

21. A new § 7.4004 is added to read as follows:

§ 7.4004 Establishment and operation of a deposit production office by a national bank.

(a) *General rule.* A national bank or its operating subsidiary may engage in deposit production activities at a site

other than the main office or a branch of the bank. A deposit production office (DPO) may solicit deposits, provide information about deposit products, and assist persons in completing application forms and related documents to open a deposit account. A DPO is not a branch within the meaning of 12 U.S.C. 36(j) and 12 CFR 5.30(d)(1) so long as it does not receive deposits, pay withdrawals, or make loans. All deposit and withdrawal transactions of a bank customer using a DPO must be performed by the customer, either in person at the main office or a branch office of the bank, or by mail, electronic transfer, or a similar method of transfer.

(b) *Services of other persons.* A national bank may use the services of, and compensate, persons not employed by the bank in its deposit production activities.

22. A new § 7.4005 is added to read as follows:

§ 7.4005 Combination of loan production office, deposit production office, and remote service unit.

A location at which a national bank operates a loan production office (LPO), a deposit production office (DPO), and a remote service unit (RSU) is not a ''branch'' within the meaning of 12 U.S.C. 36(j) by virtue of that combination. Since an LPO, DPO, or RSU is not, individually, a branch under 12 U.S.C. 36(j), any combination of these facilities at one location does not create a branch.

Dated: May 11, 1999.

John D. Hawke, Jr.,

Comptroller of the Currency.

[FR Doc. 99–14256 Filed 6–11–99; 8:45 am]

BILLING CODE 4810–33–P

DEPARTMENT OF HOUSING AND URBAN DVELOPMENT

Office of Federal Housing Enterprise Oversight

12 CFR Part 1750

RIN 2550–AA02

Risk-Based Capital

AGENCY: Office of Federal Housing Enterprise Oversight, HUD.

ACTION: Proposed rule; extension of public comment period for the second notice of proposed rulemaking.

SUMMARY: On April 13, 1999, the Office of Federal Housing Enterprise Oversight (OFHEO) published a notice of proposed rulemaking entitled ''Risk-Based Capital'' in the **Federal Register** (64 FR 18083), the second of such proposals related to the development of a regulation to establish risk-based capital standards for the Federal National Mortgage Association and the Federal Home Loan Mortgage Corporation. An earlier proposal, published on June 11, 1996, (61 FR 29592) set forth a methodology for identifying the benchmark credit loss experience specified by the Federal Housing Enterprise Financial Safety and Soundness Act of 1992 (1992 Act) and proposed the use of a House Price Index developed by OFHEO in the development of the stress test required by the 1992 Act. The second proposal (NPR 2) set forth the specifications for the stress test, completing OFHEO's risk-based capital proposal.

OFHEO has received several requests for an extension of the August 11, l999, deadline for comments on NPR 2 to permit adequate time for interested parties to replicate and analyze the stress test and to understand the test as applied to a variety of possible starting points. In recognition of the complexity that necessarily attends this method of setting capital standards, the importance of a careful evaluation of the implications of this precedent-setting approach, and the value of meaningful comment in the rulemaking process, OFHEO is extending the comment period for NPR 2 from August 11, 1999, to November 10, l999. This will insure that all interested parties have ample opportunity to participate in the rulemaking process by providing meaningful comment on the various technical and policy issues involved in the development of the risk-based capital regulation.

DATES: The comment period is extended until November 10, l999.

ADDRESSES: Send written comments to Anne E. Dewey, General Counsel, Office of General Counsel, Office of Federal Housing Enterprise Oversight, 1700 G Street, NW., Fourth Floor, Washington, DC 20552. Written comments may also be sent by electronic mail to RegComments@OFHEO.gov.

FOR FURTHER INFORMATION CONTACT: Patrick J. Lawler, Director of Policy Analysis and Chief Economist; David J. Pearl, Director, Research, Analysis and Capital Standards; or Gary L. Norton, Deputy General Counsel, Office of Federal Housing Enterprise Oversight, 1700 G Street, NW., Fourth Floor, Washington, DC 20552, telephone (202) 414–3800 (not a toll-free number). The telephone number for the Telecommunications Device for the Deaf is (800) 877–8339.

Dated: June 9, 1999.

Mark A. Kinsey,

Acting Director, Office of Federal Housing Enterprise Oversight.

[FR Doc. 99–15002 Filed 6–11–99; 8:45 am]

BILLING CODE 4220–01–P

DEPARTMENT OF TRANSPORTATION

Federal Aviation Administration

14 CFR Part 39

[Docket No. 99–CE–20–AD]

RIN 2120–AA64

Airworthiness Directives; Pilatus Aircraft Ltd. Models PC–12 and PC–12/45 Airplanes

AGENCY: Federal Aviation Administration, DOT.

ACTION: Notice of proposed rulemaking (NPRM).

SUMMARY: This document proposes to adopt a new airworthiness directive (AD) that would apply to certain Pilatus Aircraft Ltd. (Pilatus) Models PC–12 and PC–12/45 airplanes. The proposed AD would require replacing all flap drive shafts with flap drive shafts of improved design, installing additional gaskets on the power drive unit, and modifying the attachment and supporting hardware. The proposed AD is the result of mandatory continuing airworthiness information (MCAI) issued by the airworthiness authority for Switzerland. The actions specified by the proposed AD are intended to prevent the flap drive shafts from corroding to the point where the flexible shafts in the flap drive system rupture, which could result in the inability to utilize the flap system with reduced airplane control.

DATES: Comments must be received on or before July 14, 1999.

ADDRESSES: Submit comments in triplicate to the Federal Aviation Administration (FAA), Central Region, Office of the Regional Counsel, Attention: Rules Docket No. 99–CE–20–AD, Room 1558, 601 E. 12th Street, Kansas City, Missouri 64106. Comments may be inspected at this location between 8 a.m. and 4 p.m., Monday through Friday, holidays excepted.

Service information that applies to the proposed AD may be obtained from Pilatus Aircraft Ltd., Customer Liaison Manager, CH–6371 Stans, Switzerland; telephone: +41 41 619 63 19; facsimile: +41 41 610 33 51. This information also may be examined at the Rules Docket at the address above.

FOR FURTHER INFORMATION CONTACT: Mr. Roman T. Gabrys, Aerospace Engineer,

FAA, Small Airplane Directorate, 1201 Walnut, suite 900, Kansas City, Missouri 64106; telephone: (816) 426–6932; facsimile: (816) 426–2169.

SUPPLEMENTARY INFORMATION:

Comments Invited

Interested persons are invited to participate in the making of the proposed rule by submitting such written data, views, or arguments as they may desire. Communications should identify the Rules Docket number and be submitted in triplicate to the address specified above. All communications received on or before the closing date for comments, specified above, will be considered before taking action on the proposed rule. The proposals contained in this notice may be changed in light of the comments received.

Comments are specifically invited on the overall regulatory, economic, environmental, and energy aspects of the proposed rule. All comments submitted will be available, both before and after the closing date for comments, in the Rules Docket for examination by interested persons. A report that summarizes each FAA-public contact concerned with the substance of this proposal will be filed in the Rules Docket.

Commenters wishing the FAA to acknowledge receipt of their comments submitted in response to this notice must submit a self-addressed, stamped postcard on which the following statement is made: ''Comments to Docket No. 99–CE–20–AD.'' The postcard will be date stamped and returned to the commenter.

Availability of NPRMs

Any person may obtain a copy of this NPRM by submitting a request to the FAA, Central Region, Office of the Regional Counsel, Attention: Rules Docket No. 99–CE–20–AD, Room 1558, 601 E. 12th Street, Kansas City, Missouri 64106.

Discussion

The Federal Office for Civil Aviation (FOCA), which is the airworthiness authority for Switzerland, recently notified the FAA that an unsafe condition may exist on certain Pilatus Models PC–12 and PC–12/45 airplanes. The FOCA of Switzerland reports several incidents of corroded inner drive cables of the flap flexible drive shafts.

Investigation of these incidents shows that moisture from the pressurized cabin can enter the flap drive shafts through the unsealed areas of the flap drive shaft attachments and the shaft casings. Over time, this moisture leads to corroded flap drive shafts.

This condition, if not corrected in a timely manner, could result in the flexible shafts in the flap drive system rupturing with possible reduced airplane control if the pilot lost the ability to utilize the flap system.

Relevant Service Information

Pilatus has issued Service Bulletin No. 27–003, dated March 8, 1999, which specifies procedures for replacing all flap drive shafts with flap drive shafts of improved design, installing additional gaskets on the power drive unit, and modifying the attachment and supporting hardware.

The FOCA of Switzerland classified this service bulletin as mandatory and issued Swiss AD HB 99–241, dated May 8, 1999, in order to assure the continued airworthiness of these airplanes in Switzerland.

The FAA's Determination

This airplane model is manufactured in Switzerland and is type certificated for operation in the United States under the provisions of § 21.29 of the Federal Aviation Regulations (14 CFR 21.29) and the applicable bilateral airworthiness agreement. Pursuant to this bilateral airworthiness agreement, the FOCA of Switzerland has kept the FAA informed of the situation described above.

The FAA has examined the findings of the FOCA of Switzerland; reviewed all available information, including the service information referenced above; and determined that AD action is necessary for products of this type design that are certificated for operation in the United States.

Explanation of the Provisions of the Proposed AD

Since an unsafe condition has been identified that is likely to exist or develop in other Pilatus PC–12 and PC–12/45 airplanes of the same type design registered in the United States, the FAA is proposing AD action. The proposed AD would require replacing all flap drive shafts with flap drive shafts of improved design, installing additional gaskets on the power drive unit, and modifying the attachment and supporting hardware.

Accomplishment of the proposed action would be required in accordance with Pilatus Service Bulletin No. 27–003, dated March 8, 1999.

Compliance Time of the Proposed AD

The unsafe condition specified by the proposed AD is caused by corrosion. Corrosion can occur regardless of whether the aircraft is being operated. For example, corrosion could develop on one of the affected airplanes at a certain time; then, if allowed to go undetected, the corrosion could develop into a more serious problem even if the airplane is in storage. Therefore, to assure that the unsafe condition specified in the proposed AD does not go undetected for a long period of time, the compliance is presented in calendar time instead of hours time-in-service (TIS).

Cost Impact

The FAA estimates that 69 airplanes in the U.S. registry would be affected by the proposed AD, that it would take approximately 19 workhours per airplane to accomplish the proposed action, and that the average labor rate is approximately $60 an hour. Parts will be provided to the owners/operators of the affected aircraft free-of-charge. Based on these figures, the total cost impact of the proposed AD on U.S. operators is estimated to be $78,660, or $1,140 per airplane.

Regulatory Impact

The regulations proposed herein would not have substantial direct effects on the States, on the relationship between the national government and the States, or on the distribution of power and responsibilities among the various levels of government. Therefore, in accordance with Executive Order 12612, it is determined that this proposal would not have sufficient federalism implications to warrant the preparation of a Federalism Assessment.

For the reasons discussed above, I certify that this action (1) is not a ''significant regulatory action'' under Executive Order 12866; (2) is not a ''significant rule'' under DOT Regulatory Policies and Procedures (44 FR 11034, February 26, 1979); and (3) if promulgated, will not have a significant economic impact, positive or negative, on a substantial number of small entities under the criteria of the Regulatory Flexibility Act. A copy of the draft regulatory evaluation prepared for this action has been placed in the Rules Docket. A copy of it may be obtained by contacting the Rules Docket at the location provided under the caption **ADDRESSES**.

List of Subjects in 14 CFR Part 39

Air transportation, Aircraft, Aviation safety, Safety.

The Proposed Amendment

Accordingly, pursuant to the authority delegated to me by the Administrator, the Federal Aviation

Administration proposes to amend part 39 of the Federal Aviation Regulations (14 CFR part 39) as follows:

PART 39—AIRWORTHINESS DIRECTIVES

1. The authority citation for part 39 continues to read as follows:

Authority: 49 U.S.C. 106(g), 40113, 44701.

§ 39.13 [Amended]

2. Section 39.13 is amended by adding a new airworthiness directive (AD) to read as follows:

Pilatus Aircraft LTD.: Docket No. 99–CE–20–AD.

Applicability: Models PC–12 and PC–12/45 airplanes, manufacturer serial number (MSN) 101 through MSN 239, certificated in any category.

Note 1: This AD applies to each airplane identified in the preceding applicability provision, regardless of whether it has been modified, altered, or repaired in the area subject to the requirements of this AD. For airplanes that have been modified, altered, or repaired so that the performance of the requirements of this AD is affected, the owner/operator must request approval for an alternative method of compliance in accordance with paragraph (d) of this AD. The request should include an assessment of the effect of the modification, alteration, or repair on the unsafe condition addressed by this AD; and, if the unsafe condition has not been eliminated, the request should include specific proposed actions to address it.

Compliance: Required as indicated in the body of this AD, unless already accomplished.

To prevent the flap drive shafts from corroding to the point where the flexible shafts in the flap drive system rupture, which could result in the inability to utilize the flap system with reduced airplane control, accomplish the following:

(a) Within the next 4 calendar months after the effective date of this AD, accomplish the following in accordance with the Accomplishment Instructions section of Pilatus Service Bulletin No. 27–003, dated March 8, 1999:

(1) Replace all flap drive shafts with flap drive shafts of improved design (part numbers as specified in paragraphs (b)(1) and (b)(2) of this AD);

(2) Install additional gaskets on the power drive unit; and

(3) Modify the attachment and supporting hardware.

(b) As of the effective date of this AD, no person may install, on any affected airplane, a flap drive shaft assembly that is not of the following part numbers (or FAA-approved equivalent part numbers):

(1) Part number 945.02.02.201: Flap Drive Shaft 953D100–5 (Inboard); and

(2) Part-number 945.02.02.202: Flap Drive Shaft 953D100–7 (Outboard).

Note 2: The FAA recommends that the owner/operator of the affected airplanes insert Pilatus Temporary Revision No.27–07, dated January 8, 1999, into the PC12 Maintenance Manual at the same time this AD is accomplished to assure that the maintenance procedures for the improved design parts are current.

(c) Special flight permits may be issued in accordance with § § 21.197 and 21.199 of the Federal Aviation Regulations (14 CFR 21.197 and 21.199) to operate the airplane to a location where the requirements of this AD can be accomplished.

(d) An alternative method of compliance or adjustment of the compliance times that provides an equivalent level of safety may be approved by the Manager, Small Airplane Directorate, 1201 Walnut, suite 900, Kansas City, Missouri 64106. The request shall be forwarded through an appropriate FAA Maintenance Inspector, who may add comments and then send it to the Manager, Small Airplane Directorate.

Note 3: Information concerning the existence of approved alternative methods of compliance with this AD, if any, may be obtained from the Small Airplane Directorate.

(e) Questions or technical information related to Pilatus Service Bulletin No: 27–003, dated March 8, 1999, should be directed to Pilatus Aircraft Ltd., Customer Liaison Manager, CH–6371 Stans, Switzerland; telephone: +41 41 619 63 19; facsimile: +41 41 610 33 51. This service information may be examined at the FAA, Central Region, Office of the Regional Counsel, Room 1558, 601 E. 12th Street, Kansas City, Missouri 64106.

Note 4: The subject of this AD is addressed in Swiss AD HB 99–241, dated May 8, 1999.

Issued in Kansas City, Missouri, on June 4, 1999.

Marvin R. Nuss,

Acting Manager, Small Airplane Directorate, Aircraft Certification Service.

[FR Doc. 99–14937 Filed 6–11–99; 8:45 am]

BILLING CODE 4910–13–U

DEPARTMENT OF TRANSPORTATION

Federal Aviation Administration

14 CFR Part 39

[Docket No. 99–CE–10–AD]

RIN 2120–AA64

Airworthiness Directives; Pilatus Aircraft Ltd. Models PC–12 and PC–12/45 Airplanes

AGENCY: Federal Aviation Administration, DOT.

ACTION: Notice of proposed rulemaking (NPRM).

SUMMARY: This document proposes to adopt a new airworthiness directive (AD) that would apply to certain Pilatus Aircraft Ltd. (Pilatus) Models PC–12 and PC–12/45 airplanes. The proposed AD would require modifying the generator 2 excitation by removing certain diodes and installing a new 5-amp circuit breaker and suppression filter. The proposed AD is the result of mandatory continuing airworthiness information (MCAI) issued by the airworthiness authority for Switzerland. The actions specified by the proposed AD are intended to prevent damage to electrical components if the generator 2 is not switched off prior to engine shutdown and it overheats, which could result in loss of electrical power to certain critical airplane components.

DATES: Comments must be received on or before July 14, 1999.

ADDRESSES: Submit comments in triplicate to the Federal Aviation Administration (FAA), Central Region, Office of the Regional Counsel, Attention: Rules Docket No. 99–CE–10–AD, Room 1558, 601 E. 12th Street, Kansas City, Missouri 64106. Comments may be inspected at this location between 8 a.m. and 4 p.m., Monday through Friday, holidays excepted.

Service information that applies to the proposed AD may be obtained from Pilatus Aircraft Ltd., Customer Liaison Manager, CH–6371 Stans, Switzerland; telephone: +41 41 619 63 19; facsimile: +41 41 610 33 51. This information also may be examined at the Rules Docket at the address above.

FOR FURTHER INFORMATION CONTACT: Mr. Roman T. Gabrys, Aerospace Engineer, FAA, Small Airplane Directorate, 1201 Walnut, suite 900, Kansas City, Missouri 64106; telephone: (816) 426–6932; facsimile: (816) 426–2169.

SUPPLEMENTARY INFORMATION:

Comments Invited

Interested persons are invited to participate in the making of the proposed rule by submitting such written data, views, or arguments as they may desire. Communications should identify the Rules Docket number and be submitted in triplicate to the address specified above. All communications received on or before the closing date for comments, specified above, will be considered before taking action on the proposed rule. The proposals contained in this notice may be changed in light of the comments received.

Comments are specifically invited on the overall regulatory, economic, environmental, and energy aspects of the proposed rule. All comments submitted will be available, both before and after the closing date for comments, in the Rules Docket for examination by interested persons. A report that summarizes each FAA-public contact concerned with the substance of this

proposal will be filed in the Rules Docket.

Commenters wishing the FAA to acknowledge receipt of their comments submitted in response to this notice must submit a self-addressed, stamped postcard on which the following statement is made: ''Comments to Docket No. 99–CE–10–AD.'' The postcard will be date stamped and returned to the commenter.

Availability of NPRMs

Any person may obtain a copy of this NPRM by submitting a request to the FAA, Central Region, Office of the Regional Counsel, Attention: Rules Docket No. 99–CE–10–AD, Room 1558, 601 E. 12th Street, Kansas City, Missouri 64106.

Discussion

The Federal Office for Civil Aviation (FOCA), which is the airworthiness authority for Switzerland, recently notified the FAA that an unsafe condition may exist on certain Pilatus Models PC–12 and PC–12/45 airplanes. The FOCA of Switzerland reports two instances of the generator 2 not coming on-line during a normal start-up procedure. When re-attempting to start-up the generator 2, smoke was noticed in the area of the flight compartment floor.

The generator 2 control unit is not designed to prevent electrical feedback from the generator 2 field excitation on engine shut-down. If the pilot does not switch off the generator 2 prior to engine shutdown, voltage spikes are created at relay K234. Consequent overheating and damage to electrical components of the generator control circuit could then occur.

This condition could exist on airplanes with one of the following generators installed:

—a BOSCH Generator 2, part number (P/N) 524.32.12.158. This generator is installed at the factory on Pilatus Models PC–12 and PC–12/45 airplanes beginning with manufacturer serial number 231 and could be installed on airplanes with a manufacturer serial number in the range of 101 through 230 by incorporating Pilatus Service Bulletin No. 24–010, dated September 28, 1998; or

—an ELECTRO SYSTEMS Generator 2, P/N 978.87.24.121, with Pilatus Service Bulletin No. 24–009 (installation of support bracket and cut-out relay) incorporated. This generator is installed at the factory on Pilatus Models PC–12 and PC–12/45 airplanes with a manufacturer serial number in the range of 101 through 230. AD 99–06–17, Amendment 39–11081 (64 FR 13882, March 23, 1999), requires installing the support bracket and cut-out relay specified in Pilatus Service Bulletin No. 24–009, dated September 23, 1998, on Pilatus Models PC–12 and PC–12/45 airplanes with a manufacturer serial number in the range of 101 through 180. This service bulletin is incorporated at the factory on airplanes with a manufacturer serial number in the range of 181 through 230.

This condition, if not corrected, could result in the generator 2 not going on-line with consequent loss of electrical power to certain critical airplane components.

Relevant Service Information

Pilatus has issued Service Bulletin No. 24–012, dated February 19, 1999, which specifies procedures for modifying the generator 2 excitation by removing certain diodes and installing a new 5-amp circuit breaker and suppression filter.

The FOCA of Switzerland classified this service bulletin as mandatory and issued Swiss AD HB 99–143, dated February 19, 1999, in order to assure the continued airworthiness of these airplanes in Switzerland.

The FAA's Determination

This airplane model is manufactured in Switzerland and is type certificated for operation in the United States under the provisions of § 21.29 of the Federal Aviation Regulations (14 CFR 21.29) and the applicable bilateral airworthiness agreement. Pursuant to this bilateral airworthiness agreement, the FOCA of Switzerland has kept the FAA informed of the situation described above.

The FAA has examined the findings of the FOCA of Switzerland; reviewed all available information, including the service information referenced above; and determined that AD action is necessary for products of this type design that are certificated for operation in the United States.

Explanation of the Provisions of the Proposed AD

Since an unsafe condition has been identified that is likely to exist or develop in other Pilatus PC–12 and PC–12/45 airplanes of the same type design registered in the United States, the FAA is proposing AD action. The proposed AD would require modifying the generator 2 excitation by removing certain diodes and installing a new 5-amp circuit breaker and suppression filter.

Accomplishment of the proposed action would be required in accordance with Pilatus Service Bulletin No. 24–012, dated February 19, 1999.

Cost Impact

The FAA estimates that 69 airplanes in the U.S. registry would be affected by the proposed AD, that it would take approximately 5 workhours per airplane to accomplish the proposed action, and that the average labor rate is approximately $60 an hour. Parts will be provided at no cost to the owners/operators of the affected aircraft. Based on these figures, the total cost impact of the proposed AD on U.S. operators is estimated to be $20,700, or $300 per airplane.

Regulatory Impact

The regulations proposed herein would not have substantial direct effects on the States, on the relationship between the national government and the States, or on the distribution of power and responsibilities among the various levels of government. Therefore, in accordance with Executive Order 12612, it is determined that this proposal would not have sufficient federalism implications to warrant the preparation of a Federalism Assessment.

For the reasons discussed above, I certify that this action (1) is not a ''significant regulatory action'' under Executive Order 12866; (2) is not a ''significant rule'' under DOT Regulatory Policies and Procedures (44 FR 11034, February 26, 1979); and (3) if promulgated, will not have a significant economic impact, positive or negative, on a substantial number of small entities under the criteria of the Regulatory Flexibility Act. A copy of the draft regulatory evaluation prepared for this action has been placed in the Rules Docket. A copy of it may be obtained by contacting the Rules Docket at the location provided under the caption **ADDRESSES**.

List of Subjects in 14 CFR Part 39

Air transportation, Aircraft, Aviation safety, Safety.

The Proposed Amendment

Accordingly, pursuant to the authority delegated to me by the Administrator, the Federal Aviation Administration proposes to amend part 39 of the Federal Aviation Regulations (14 CFR part 39) as follows:

PART 39—AIRWORTHINESS DIRECTIVES

1. The authority citation for part 39 continues to read as follows:

Authority: 49 U.S.C. 106(g), 40113, 44701.

§ 39.13 [Amended]

2. Section 39.13 is amended by adding a new airworthiness directive (AD) to read as follows:

Pilatus Aircraft Ltd.: Docket No. 99–CE–10–AD. Applicability: Models PC–12 and PC–12/45 airplanes, manufacturer serial numbers 101 through MSN 260, certificated in any category.

Note 1: This AD applies to each airplane identified in the preceding applicability provision, regardless of whether it has been modified, altered, or repaired in the area subject to the requirements of this AD. For airplanes that have been modified, altered, or repaired so that the performance of the requirements of this AD is affected, the owner/operator must request approval for an alternative method of compliance in accordance with paragraph (d) of this AD. The request should include an assessment of the effect of the modification, alteration, or repair on the unsafe condition addressed by this AD; and, if the unsafe condition has not been eliminated, the request should include specific proposed actions to address it.

Compliance: Required as indicated in the body of this AD, unless already accomplished.

To prevent damage to electrical components if the generator 2 is not switched off prior to engine shutdown and it overheats, which could result in loss of electrical power to certain critical airplane components, accomplish the following:

(a) Within the next 100 hours time-in-service (TIS) after the effective date of this AD, modify the generator 2 excitation by removing certain diodes and installing a new 5-amp circuit breaker and suppression filter. Perform these actions in accordance with the ACCOMPLISHMENT INSTRUCTIONS section of Pilatus Service Bulletin No. 24–012, dated February 19, 1999.

Note 2: The affected airplanes incorporate one of the following generators:

—a BOSCH Generator 2, part number (P/N) 524.32.12.158. This generator is installed at the factory on Pilatus Models PC–12 and PC–12/45 airplanes beginning with manufacturer serial number 231 and could be installed on airplanes with a manufacturer serial number in the range of 101 through 230 by incorporating Pilatus Service Bulletin No. 24–010, dated September 28, 1998; or

—an ELECTRO SYSTEMS Generator 2, P/N 978.87.24.121, with Pilatus Service Bulletin No. 24–009 (installation of support bracket and cut-out relay) incorporated. This generator is installed at the factory on Pilatus Models PC–12 and PC–12/45 airplanes with a manufacturer serial number in the range of 101 through 230. AD 99–06–17, Amendment 39–11081 (64 FR 13882, March 23, 1999), requires installing the support bracket and cut-out relay specified in Pilatus Service Bulletin No. 24–009, dated September 23, 1998, on Pilatus Models PC–12 and PC–12/45 airplanes with a manufacturer serial number in the range of 101 through 180. This service bulletin is incorporated at the factory on airplanes with a manufacturer serial number in the range of 181 through 230.

(b) As of the effective date of this AD, no person may install, on any affected airplane, a generator 2 that does not have the modification referenced in paragraph (a) of this AD incorporated.

(c) Special flight permits may be issued in accordance with §§ 21.197 and 21.199 of the Federal Aviation Regulations (14 CFR 21.197 and 21.199) to operate the airplane to a location where the requirements of this AD can be accomplished.

(d) An alternative method of compliance or adjustment of the compliance times that provides an equivalent level of safety may be approved by the Manager, Small Airplane Directorate, 1201 Walnut, suite 900, Kansas City, Missouri 64106. The request shall be forwarded through an appropriate FAA Maintenance Inspector, who may add comments and then send it to the Manager, Small Airplane Directorate.

Note 3: Information concerning the existence of approved alternative methods of compliance with this AD, if any, may be obtained from the Small Airplane Directorate.

(e) Questions or technical information related to Pilatus Service Bulletin No. 24–012, dated February 19, 1999, should be directed to Pilatus Aircraft Ltd., Customer Liaison Manager, CH–6371 Stans, Switzerland; telephone: +41 41 619 63 19; facsimile: +41 41 610 33 51. This service information may be examined at the FAA, Central Region, Office of the Regional Counsel, Room 1558, 601 E. 12th Street, Kansas City, Missouri 64106.

Note 4: The subject of this AD is addressed in Swiss AD HB 99–143, dated February 19, 1999.

Issued in Kansas City, Missouri, on June 4, 1999.

Marvin R. Nuss,

Acting Manager, Small Airplane Directorate, Aircraft Certification Service.

[FR Doc. 99–14936 Filed 6–11–99; 8:45 am]

BILLING CODE 4910–13–U

DEPARTMENT OF TRANSPORTATION

Federal Aviation Administration

14 CFR Part 39

[Docket No. 99–CE–16–AD]

RIN 2120–AA64

Airworthiness Directives; LET Aeronautical Works Model L–13 ''Blanik'' Sailplanes

AGENCY: Federal Aviation Administration, DOT.

ACTION: Notice of proposed rulemaking (NPRM).

SUMMARY: This document proposes to adopt a new airworthiness directive (AD) that would apply to all LET Aeronautical Works (LET) Model L–13 ''Blanik'' sailplanes. The proposed AD would require painting (using a contrasting color, i.e., red paint) the left hand elevator drive mechanism in order to not have the elevator drive bellcrank inadvertently installed backwards. The proposed AD is the result of mandatory continuing airworthiness information (MCAI) issued by the airworthiness authority for the Czech Republic. The actions specified by the proposed AD are intended to prevent the elevator drive bellcrank from being installed backwards, which could result in an incorrect rigging of the elevator flight control with potential reduced or loss of control of the sailplane.

DATES: Comments must be received on or before July 14, 1999.

ADDRESSES: Submit comments in triplicate to the Federal Aviation Administration (FAA), Central Region, Office of the Regional Counsel, Attention: Rules Docket No. 99–CE–16–AD, Room 1558, 601 E. 12th Street, Kansas City, Missouri 64106. Comments may be inspected at this location between 8 a.m. and 4 p.m., Monday through Friday, holidays excepted.

Service information that applies to the proposed AD may be obtained from LET Aeronautical Works, Kunovice 686 04, Czech Republic; telephone: +420 632 55 44 96; facsimile: +420 632 611 26. This information also may be examined at the Rules Docket at the address above.

FOR FURTHER INFORMATION CONTACT: Mike Kiesov, Aerospace Engineer, FAA, Small Airplane Directorate, 1201 Walnut, suite 900, Kansas City, Missouri 64106; telephone: (816) 426–6934; facsimile: (816) 426–2169.

SUPPLEMENTARY INFORMATION:

Comments Invited

Interested persons are invited to participate in the making of the proposed rule by submitting such written data, views, or arguments as they may desire. Communications should identify the Rules Docket number and be submitted in triplicate to the address specified above. All communications received on or before the closing date for comments, specified above, will be considered before taking action on the proposed rule. The proposals contained in this notice may be changed in light of the comments received.

Comments are specifically invited on the overall regulatory, economic, environmental, and energy aspects of the proposed rule. All comments submitted will be available, both before and after the closing date for comments, in the Rules Docket for examination by interested persons. A report that summarizes each FAA-public contact concerned with the substance of this

proposal will be filed in the Rules Docket.

Commenters wishing the FAA to acknowledge receipt of their comments submitted in response to this notice must submit a self-addressed, stamped postcard on which the following statement is made: ''Comments to Docket No. 99–CE–16–AD.'' The postcard will be date stamped and returned to the commenter.

Availability of NPRMs

Any person may obtain a copy of this NPRM by submitting a request to the FAA, Central Region, Office of the Regional Counsel, Attention: Rules Docket No. 99–CE–16–AD, Room 1558, 601 E. 12th Street, Kansas City, Missouri 64106.

Discussion

The Civil Aviation Authority of the Czech Republic (CAA CZ), which is the airworthiness authority for the Czech Republic, notified the FAA that an unsafe condition may exist on certain LET Model L–13 ''Blanik'' sailplanes. The CAA CZ reports a recent accident of one of the affected sailplanes where the elevator drive bellcrank was incorrectly installed.

Improper installation of the elevator drive bellcrank, if not corrected, could result in an incorrect rigging of the elevator flight control with potential reduced or loss of control of the sailplane.

Relevant Service Information

LET has issued Mandatory Bulletin No. L13/082a, dated December 10, 1998, which specifies procedures for painting (using red paint) the left hand elevator drive mechanism in order to not have the elevator drive bellcrank inadvertently installed backwards. This includes procedures for dismantling and reassembling the elevator drive bellcrank.

The CAA CZ classified this service bulletin as mandatory and issued Czech Republic AD Number : CAA–AD–4–099/98, dated December 30, 1998, in order to assure the continued airworthiness of these sailplanes in the Czech Republic.

The FAA's Determination

This sailplane model is manufactured in the Czech Republic and is type certificated for operation in the United States under the provisions of section 21.29 of the Federal Aviation Regulations (14 CFR 21.29) and the applicable bilateral airworthiness agreement. Pursuant to this bilateral airworthiness agreement, the CAA CZ has kept the FAA informed of the situation described above.

The FAA has examined the findings of the CAA CZ; reviewed all available information, including the service information referenced above; and determined that AD action is necessary for products of this type design that are certificated for operation in the United States.

Explanation of the Provisions of the Proposed AD

Since an unsafe condition has been identified that is likely to exist or develop in other LET Model L–13 ''Blanik'' sailplanes of the same type design registered in the United States, the FAA is proposing AD action. The proposed AD would require painting (using a contrasting color, i.e., red paint) the left hand elevator drive mechanism in order to not have the elevator drive bellcrank inadvertently installed backwards. Accomplishment of the proposed action would be in accordance with LET Mandatory Bulletin No. L13/082a, dated December 10, 1998.

Compliance Time of the Proposed AD

Although flight control problems caused by improper installation of the elevator drive bellcrank are only unsafe while the affected sailplanes are in flight, the condition could occur after any time the elevator drive bellcrank is reinstalled on the sailplane. The chance of this situation occurring is the same for a sailplane with 10 hours time-in-service (TIS) as it is for a sailplane with 500 hours TIS. For this reason, the FAA is utilizing a compliance based on calendar time instead of hours TIS in the proposed AD in order to assure that the unsafe condition is addressed on all sailplanes in a reasonable time period.

Cost Impact

The FAA estimates that 140 sailplanes in the U.S. registry would be affected by the proposed AD, that it would take approximately 1 workhour per sailplane to accomplish the proposed action, and that the average labor rate is approximately $60 an hour. Parts cost approximately $5 per sailplane. Based on these figures, the total cost impact of the proposed AD on U.S. operators is estimated to be $9,100, or $65 per sailplane.

Regulatory Impact

The regulations proposed herein would not have substantial direct effects on the States, on the relationship between the national government and the States, or on the distribution of power and responsibilities among the various levels of government. Therefore, in accordance with Executive Order 12612, it is determined that this proposal would not have sufficient federalism implications to warrant the preparation of a Federalism Assessment.

For the reasons discussed above, I certify that this action (1) is not a ''significant regulatory action'' under Executive Order 12866; (2) is not a ''significant rule'' under DOT Regulatory Policies and Procedures (44 FR 11034, February 26, 1979); and (3) if promulgated, will not have a significant economic impact, positive or negative, on a substantial number of small entities under the criteria of the Regulatory Flexibility Act. A copy of the draft regulatory evaluation prepared for this action has been placed in the Rules Docket. A copy of it may be obtained by contacting the Rules Docket at the location provided under the caption **ADDRESSES**.

List of Subjects in 14 CFR Part 39

Air transportation, Aircraft, Aviation safety, Safety.

The Proposed Amendment

Accordingly, pursuant to the authority delegated to me by the Administrator, the Federal Aviation Administration proposes to amend part 39 of the Federal Aviation Regulations (14 CFR part 39) as follows:

PART 39—AIRWORTHINESS DIRECTIVES

1. The authority citation for part 39 continues to read as follows:

Authority: 49 U.S.C. 106(g), 40113, 44701.

§ 39.13 [Amended]

2. Section 39.13 is amended by adding a new airworthiness directive (AD) to read as follows:

LET Aeronautical Works: Docket No. 99–CE–16–AD.

Applicability: Model L–13 ''Blanik'' sailplanes, all serial numbers, certificated in any category.

Note 1: This AD applies to each sailplane identified in the preceding applicability provision, regardless of whether it has been modified, altered, or repaired in the area subject to the requirements of this AD. For sailplanes that have been modified, altered, or repaired so that the performance of the requirements of this AD is affected, the owner/operator must request approval for an alternative method of compliance in accordance with paragraph (d) of this AD. The request should include an assessment of the effect of the modification, alteration, or repair on the unsafe condition addressed by this AD; and, if the unsafe condition has not been eliminated, the request should include specific proposed actions to address it.

Compliance: Required as indicated in the body of this AD, unless already accomplished.

To prevent the elevator drive bellcrank from being installed backwards, which could result in an incorrect rigging of the elevator flight control with potential reduced or loss of control of the sailplane, accomplish the following:

(a) Within the next 3 calendar months after the effective date of this AD, paint (using a contrasting color, i.e., red paint) the elevator drive mechanism to prevent the elevator drive bellcrank from being inadvertently installed backwards. Accomplish this action in accordance with the Work Procedure section, including Figure 1, of LET Mandatory Bulletin No. L13.082a, dated December 10, 1998.

(b) As of the effective date of this AD, no person may install, on any affected sailplane, an elevator drive bellcrank where the following has not been accomplished:

(1) The elevator bellcrank inspected to assure that it is not installed backwards; and

(2) The elevator drive bellcrank painted as required by paragraph (a) of this AD.

(c) Special flight permits may be issued in accordance with sections 21.197 and 21.199 of the Federal Aviation Regulations (14 CFR 21.197 and 21.199) to operate the sailplane to a location where the requirements of this AD can be accomplished.

(d) An alternative method of compliance or adjustment of the compliance times that provides an equivalent level of safety may be approved by the Manager, Small Airplane Directorate, FAA, 1201 Walnut, suite 900, Kansas City, Missouri 64106. The request shall be forwarded through an appropriate FAA Maintenance Inspector, who may add comments and then send it to the Manager, Small Airplane Directorate.

Note 2: Information concerning the existence of approved alternative methods of compliance with this AD, if any, may be obtained from the Small Airplane Directorate.

(e) Questions or technical information related to LET Mandatory Bulletin No. L13/082a, dated December 10, 1998, should be directed to LET Aeronautical Works, Kunovice 686 04, Czech Republic; telephone: +420 632 55 44 96; facsimile: +420 632 611 26. This service information may be examined at the FAA, Central Region, Office of the Regional Counsel, Room 1558, 601 E. 12th Street, Kansas City, Missouri 64106.

Note 3: The subject of this AD is addressed in Czec Republic AD Number: CAA–AD–4–099/98, dated December 30, 1998.

Issued in Kansas City, Missouri, on June 4, 1999.

Marvin R. Nuss,

Acting Manager, Small Airplane Directorate, Aircraft Certification Service.

[FR Doc. 99–14935 Filed 6–11–99; 8:45 am]

BILLING CODE 4910–13–P

DEPARTMENT OF TRANSPORTATION

Federal Aviation Administration

14 CFR Part 39

[Docket No. 99–NM–47–AD]

RIN 2120–AA64

Airworthiness Directives; Boeing Model 737–100, –200, –300, –400, and –500 Series Airplanes

AGENCY: Federal Aviation Administration, DOT.

ACTION: Notice of proposed rulemaking (NPRM).

SUMMARY: This document proposes the adoption of a new airworthiness directive (AD) that is applicable to certain Boeing Model 737–100, –200, –300, –400, and –500 series airplanes. For certain airplanes, this proposal would require installation of a transient suppression diode in the wiring circuit of the refueling valve-to-float switch of each fuel tank. For certain other airplanes, this proposal would require replacement of the existing transient suppression diode with an improved diode. This proposal also would require a functional test to verify proper installation of each diode, and corrective action, if necessary. This proposal is prompted by incidents of electrical fire during fueling of the airplane, due to a short circuit and overheating of a transient suppression diode. The actions specified by the proposed AD are intended to prevent such conditions, which could result in electrical arcing and ignition of fuel vapors at the refueling receptacle for the fuel tanks, and consequent fire during airplane fueling.

DATES: Comments must be received by July 29, 1999.

ADDRESSES: Submit comments in triplicate to the Federal Aviation Administration (FAA), Transport Airplane Directorate, ANM–114, Attention: Rules Docket No. 99–NM–47–AD, 1601 Lind Avenue, SW., Renton, Washington 98055–4056. Comments may be inspected at this location between 9:00 a.m. and 3:00 p.m., Monday through Friday, except Federal holidays.

The service information referenced in the proposed rule may be obtained from Boeing Commercial Airplane Group, P.O. Box 3707, Seattle, Washington 98124–2207. This information may be examined at the FAA, Transport Airplane Directorate, 1601 Lind Avenue, SW., Renton, Washington.

FOR FURTHER INFORMATION CONTACT: Dorr Anderson, Aerospace Engineer, Propulsion Branch, ANM–140S, FAA, Transport Airplane Directorate, Seattle Aircraft Certification Office, 1601 Lind Avenue, SW., Renton, Washington 98055–4056; telephone (425) 227–2684; fax (425) 227–1181.

SUPPLEMENTARY INFORMATION:

Comments Invited

Interested persons are invited to participate in the making of the proposed rule by submitting such written data, views, or arguments as they may desire. Communications shall identify the Rules Docket number and be submitted in triplicate to the address specified above. All communications received on or before the closing date for comments, specified above, will be considered before taking action on the proposed rule. The proposals contained in this notice may be changed in light of the comments received.

Comments are specifically invited on the overall regulatory, economic, environmental, and energy aspects of the proposed rule. All comments submitted will be available, both before and after the closing date for comments, in the Rules Docket for examination by interested persons. A report summarizing each FAA-public contact concerned with the substance of this proposal will be filed in the Rules Docket.

Commenters wishing the FAA to acknowledge receipt of their comments submitted in response to this notice must submit a self-addressed, stamped postcard on which the following statement is made: ''Comments to Docket Number 99–NM–47–AD.'' The postcard will be date stamped and returned to the commenter.

Availability of NPRMs

Any person may obtain a copy of this NPRM by submitting a request to the FAA, Transport Airplane Directorate, ANM–114, Attention: Rules Docket No. 99–NM–47–AD, 1601 Lind Avenue, SW., Renton, Washington 98055–4056.

Discussion

The FAA has received reports indicating that electrical fires have been detected during fueling of two Boeing Model 737 series airplanes. The affected airplanes have transient suppression diodes installed in the wiring circuit of the refueling valve-to-float switch of the fuel tanks to prevent electrical transients from entering the fuel tanks.

Investigation revealed that a short circuit in the transient suppression diode of the number 1 fuel tank caused electrical arcing, and consequent fire. The diode is located 17 inches from the P15 pressure fueling panel. In the event

of a short circuit of a transient suppression diode and consequent electrical fire, the proximity of the diode to the pressure fueling panel could result in ignition of fuel vapors at the fueling receptacle during fueling. The fuel valve circuit, of which the diode is part, is powered only during pressure fueling on the ground; therefore, the diode is most likely to short circuit and overheat during airplane fueling.

Inspection of production diodes by the manufacturer revealed that the manufacturing process may be the cause of the failure of the diodes during normal operation of the airplane. The failures appear to be caused by stresses on the internal leads and end caps of the diode by the placement of the wire crimps next to the glass body of the diode. The manufacturer replaced the deficient diodes with improved diodes during production of Model 737 series airplanes having line numbers 3017 and subsequent.

Explanation of Relevant Service Information

The FAA has reviewed and approved Boeing Service Bulletin 737–28–1115, dated March 4, 1999, which describes procedures for installation of a transient suppression diode in the wiring circuit of the refueling valve-to-float switch of each fuel tank on certain airplanes, and replacement of the existing transient suppression diode with an improved diode, on certain other airplanes. The service bulletin also describes procedures for a functional test to verify proper installation of each diode. Accomplishment of the actions specified in the service bulletin is intended to adequately address the identified unsafe condition.

Explanation of Requirements of Proposed Rule

Since an unsafe condition has been identified that is likely to exist or develop on other products of this same type design, the proposed AD would require accomplishment of the actions specified in the service bulletin described previously, except as discussed below.

Differences Between Proposed Rule and Service Bulletin

Operators should note that, although the service bulletin recommends installation of the improved diodes as soon as manpower and materials are available, the FAA has determined that a 12-month compliance time would address the identified unsafe condition in a timely manner. In developing an appropriate compliance time for this AD, the FAA considered not only the manufacturer's recommendation, but the degree of urgency associated with addressing the subject unsafe condition, the average utilization of the affected fleet, and the time necessary to perform the modification. In light of all of these factors, the FAA finds a 12-month compliance time for completion of the proposed replacement to be warranted, in that it represents an appropriate interval of time allowable for affected airplanes to continue to operate without compromising safety.

Operators also should note that, although the service bulletin does not specify corrective action if any discrepancy is detected during the functional test of the transient suppression diode, this proposal would require replacement of the discrepant diode to be accomplished in accordance with the procedures specified in the service bulletin.

Cost Impact

There are approximately 2,897 airplanes of the affected design in the worldwide fleet. The FAA estimates that 1,126 airplanes of U.S. registry would be affected by this proposed AD.

For all airplanes, it would take approximately 7 work hours per airplane to accomplish the proposed replacement or installation (as applicable), and the functional test to verify proper installation, at an average labor rate of $60 per work hour. Required parts would cost approximately $50 per airplane. Based on these figures, the cost impact of the proposed AD on U.S. operators is estimated to be $529,220, or $470 per airplane.

The cost impact figure discussed above is based on assumptions that no operator has yet accomplished any of the proposed requirements of this AD action, and that no operator would accomplish those actions in the future if this AD were not adopted.

Regulatory Impact

The regulations proposed herein would not have substantial direct effects on the States, on the relationship between the national government and the States, or on the distribution of power and responsibilities among the various levels of government. Therefore, in accordance with Executive Order 12612, it is determined that this proposal would not have sufficient federalism implications to warrant the preparation of a Federalism Assessment.

For the reasons discussed above, I certify that this proposed regulation (1) is not a ''significant regulatory action'' under Executive Order 12866; (2) is not a ''significant rule'' under the DOT Regulatory Policies and Procedures (44 FR 11034, February 26, 1979); and (3) if promulgated, will not have a significant economic impact, positive or negative, on a substantial number of small entities under the criteria of the Regulatory Flexibility Act. A copy of the draft regulatory evaluation prepared for this action is contained in the Rules Docket. A copy of it may be obtained by contacting the Rules Docket at the location provided under the caption **ADDRESSES.**

List of Subjects in 14 CFR Part 39

Air transportation, Aircraft, Aviation safety, Safety.

The Proposed Amendment

Accordingly, pursuant to the authority delegated to me by the Administrator, the Federal Aviation Administration proposes to amend part 39 of the Federal Aviation Regulations (14 CFR part 39) as follows:

PART 39—AIRWORTHINESS DIRECTIVES

1. The authority citation for part 39 continues to read as follows:

Authority: 49 U.S.C. 106(g), 40113, 44701.

§ 39.13 [Amended]

2. Section 39.13 is amended by adding the following new airworthiness directive:

Boeing: Docket 99–NM–47–AD.

Applicability: Model 737–100, –200, –300, –400, and –500 series airplanes, line numbers 1 through 3016 inclusive, certificated in any category.

Note 1: This AD applies to each airplane identified in the preceding applicability provision, regardless of whether it has been modified, altered, or repaired in the area subject to the requirements of this AD. For airplanes that have been modified, altered, or repaired so that the performance of the requirements of this AD is affected, the owner/operator must request approval for an alternative method of compliance in accordance with paragraph (e) of this AD. The request should include an assessment of the effect of the modification, alteration, or repair on the unsafe condition addressed by this AD; and, if the unsafe condition has not been eliminated, the request should include specific proposed actions to address it.

Compliance: Required as indicated, unless accomplished previously.

To prevent a short circuit and overheating of the transient suppression diode, which could result in electrical arcing and ignition of fuel vapors at the fueling receptacle for the fuel tanks, and consequent fire during airplane fueling, accomplish the following:

Corrective Action

(a) For Group 1 airplanes, as identified in Boeing Service Bulletin 737–28–1115, dated March 4, 1999: Within 12 months after the

effective date of this AD, install a transient suppression diode, part number (P/N) 69–58806–4, in the wire bundle (W264) of the refueling valve-to-float switch of each fuel tank, in accordance with the service bulletin.

(b) For Groups 2, 3, and 4 airplanes, as identified in Boeing Service Bulletin 737–28–1115, dated March 4, 1999: Within 12 months after the effective date of this AD, replace the existing transient suppression diode, P/N 69–58806–1 or 69–58806–3, installed in the wire bundle (W264) of the refueling valve-to-float switch of each fuel tank, with an improved diode, P/N 69–58806–4, in accordance with the service bulletin.

(c) Prior to further flight following accomplishment of the actions requied by paragraph (a) or (b) of this AD, perform a functional test to verify proper installation of each diode in accordance with Boeing Service Bulletin 737–28–1115, dated March 4, 1999. If any discrepancy is detected during any functional test, prior to further flight, replace the discrepant diode and repeat the functional test, in accordance with the service bulletin.

Spares Paragraph

(d) As of the effective date of this AD, no person shall install a transient suppression diode having P/N 69–58806–1 or 69–58806–3 on any airplane.

Alternative Methods of Compliance

(e) An alternative method of compliance or adjustment of the compliance time that provides an acceptable level of safety may be used if approved by the Manager, Seattle Aircraft Certification Office (ACO), FAA, Transport Airplane Directorate.

Operators shall submit their requests through an appropriate FAA Principal Maintenance Inspector, who may add comments and then send it to the Manager, Seattle ACO.

Note 2: Information concerning the existence of approved alternative methods of compliance with this AD, if any, may be obtained from the Seattle ACO.

Special Flight Permits

(f) Special flight permits may be issued in accordance with §§ 21.197 and 21.199 of the Federal Aviation Regulations (14 CFR 21.197 and 21.199) to operate the airplane to a location where the requirements of this AD can be accomplished.

Issued in Renton, Washington, on June 7, 1999.

John J. Hickey,

Acting Manager, Transport Airplane Directorate, Aircraft Certification Service.

[FR Doc. 99–14934 Filed 6–11–99; 8:45 am]

BILLING CODE 4910–13–P

DEPARTMENT OF TRANSPORTATION

Federal Aviation Administration

14 CFR Part 39

[Docket No. 98–NM–231–AD]

RIN 2120–AA64

Airworthiness Directives; Boeing Model 767 Series Airplanes Equipped With General Electric CF6–80C2 Series Engines

AGENCY: Federal Aviation Administration, DOT.

ACTION: Notice of proposed rulemaking (NPRM).

SUMMARY: This document proposes the supersedure of an existing airworthiness directive (AD), applicable to certain Boeing Model 767 series airplanes, that currently requires tests, inspections, and adjustments of the thrust reverser system. That AD also requires installation of a terminating modification, and repetitive follow-on actions. This action would reduce the repetitive intervals for the follow-on actions. This proposal is prompted by reports indicating that several center drive units (CDU's) were returned to the manufacturer of the CDU's because of low holding torque of the CDU cone brake. The actions specified by the proposed AD are intended to ensure the integrity of the fail safe features of the thrust reverser system by preventing possible failure modes in the thrust reverser control system that can result in inadvertent deployment of a thrust reverser during flight.

DATES: Comments must be received by July 29, 1999.

ADDRESSES: Submit comments in triplicate to the Federal Aviation Administration (FAA), Transport Airplane Directorate, ANM–114, Attention: Rules Docket No. 98–NM–231–AD, 1601 Lind Avenue, SW., Renton, Washington 98055–4056. Comments may be inspected at this location between 9:00 a.m. and 3:00 p.m., Monday through Friday, except Federal holidays.

The service information referenced in the proposed rule may be obtained from Boeing Commercial Airplane Group, P.O. Box 3707, Seattle, Washington 98124–2207. This information may be examined at the FAA, Transport Airplane Directorate, 1601 Lind Avenue, SW., Renton, Washington.

FOR FURTHER INFORMATION CONTACT: Holly Thorson, Aerospace Engineer, Propulsion Branch, ANM–140S, FAA, Transport Airplane Directorate, Seattle Aircraft Certification Office, 1601 Lind Avenue, SW., Renton, Washington 98055–4056; telephone (425) 227–1357; fax (425) 227–1181.

SUPPLEMENTARY INFORMATION:

Comments Invited

Interested persons are invited to participate in the making of the proposed rule by submitting such written data, views, or arguments as they may desire. Communications shall identify the Rules Docket number and be submitted in triplicate to the address specified above. All communications received on or before the closing date for comments, specified above, will be considered before taking action on the proposed rule. The proposals contained in this notice may be changed in light of the comments received.

Comments are specifically invited on the overall regulatory, economic, environmental, and energy aspects of the proposed rule. All comments submitted will be available, both before and after the closing date for comments, in the Rules Docket for examination by interested persons. A report summarizing each FAA-public contact concerned with the substance of this proposal will be filed in the Rules Docket.

Commenters wishing the FAA to acknowledge receipt of their comments submitted in response to this notice must submit a self-addressed, stamped postcard on which the following statement is made: ''Comments to Docket Number 98–NM–231–AD.'' The postcard will be date stamped and returned to the commenter.

Availability of NPRMs

Any person may obtain a copy of this NPRM by submitting a request to the FAA, Transport Airplane Directorate, ANM–114, Attention: Rules Docket No. 98–NM–231–AD, 1601 Lind Avenue, SW., Renton, Washington 98055–4056.

Discussion

On June 22, 1995, the FAA issued AD 95–13–12, amendment 39–9292 (60 FR 36976, July 19, 1995), as revised by AD 95–13–12 R1, amendment 39–9528 (61 FR 9092, March 7, 1996), applicable to certain Boeing Model 767 series airplanes, to require tests, inspections, and adjustments of the thrust reverser system. That AD also requires installation of a terminating modification, and repetitive operational checks of the electro-mechanical brake and the cone brake of the center drive unit (CDU) following accomplishment of the modification. That action was prompted by the identification of a modification that ensures that the level of safety inherent in the original type

design of the thrust reverser system is further enhanced. The requirements of that AD are intended to prevent possible discrepancies in the thrust reverser control system, which could result in inadvertent deployment of a thrust reverser during flight. The revision of the AD clarifies the requirements of AD 95–13–12 by specifying a revised number of pound-inches of torque that operators should use when performing the torque check of the cone brake of the CDU.

Actions Since Issuance of Previous Rule

Since the issuance of AD 95–13–12 R1, the FAA has received reports indicating that several thrust reverser CDU's were returned to the manufacturer of the CDU's because of low holding torque of the CDU cone brake. This possible failure condition was not included in any previous safety assessment of the thrust reverser by the manufacturer. The returned CDU's had accumulated between 3,400 and 3,600 total flight hours. The cause of the low holding torque is a combination of cone brake wear, overrunning clutch wear, and grease contamination of the cone brake. Such a low torque condition could result in failure of the cone brake of the CDU, which could disable one of the fail safe features of the thrust reverser system that prevent deployment of a thrust reverser during flight.

As a result of this failure condition, the manufacturer has submitted a revised safety analysis of the thrust reverser system and has defined specific intervals for accomplishing functional tests of the CDU cone brake and operational checks of the electro-mechanical brake, which occur more frequently than those defined in AD 95–13–12 R1. The recommended intervals have been published in the Boeing 767 Maintenance Planning Document.

Explanation of Relevant Service Information

The FAA has reviewed and approved Boeing Service Bulletin 767–78A0081, Revision 1, dated October 9, 1997, which describes procedures for a repetitive functional test of the CDU cone brake on each thrust reverser, and correction of any discrepancy detected. The procedures for the functional test of the cone brake are essentially the same as those described in Boeing Service Bulletin 767–78–0047, Revision 3, dated July 28, 1994 (which was referenced as an appropriate source of service information in AD 95–13–12) for Model 767 series airplanes equipped with General Electric CF6–80C2 series engines. However, Boeing Service Bulletin 767–78A0081, Revision 1, specifies a shorter repetitive interval for the functional test (650 flight hours) than was specified in Boeing Service Bulletin 767–78–0047, Revision 3 (1,000 flight hours).

Explanation of Requirements of Proposed Rule

Since an unsafe condition has been identified that is likely to exist or develop on other products of this same type design, the proposed AD would supersede AD 95–13–12 R1 to continue to require various inspections and functional tests to detect discrepancies of the thrust reverser control and indication system, and correction of any discrepancy found. This proposed AD would reduce the repetitive intervals for the functional test of the CDU cone brake and the operational check of the electro-mechanical brake. The functional test of the CDU cone brake would be required to be accomplished in accordance with the service bulletin described previously, except as discussed below.

Differences Between Service Bulletin and This Proposed AD

Operators should note that Boeing Service Bulletin 767–78A0081, Revision 1, specifies that the functional test of the CDU cone brake described in that service bulletin is not necessary for Model 767 series airplanes that are equipped with thrust reversers modified in accordance with Boeing Service Bulletin 767–78–0063 (or production equivalent). Boeing Model 767 series airplanes having line numbers 475 and higher are equipped with such modified thrust reversers; therefore, the effectivity listing of Boeing Service Bulletin 767–78A0081, Revision 1, includes only Model 767 series airplanes equipped with General Electric Model CF6–80C2 engines having line numbers prior to 475.

This proposed AD, however, would require that the cone brake functional test be performed on Model 767 series airplanes equipped with General Electric Model CF6–80C2 engines regardless of whether they are equipped with thrust reversers modified in accordance with Boeing Service Bulletin 767–78–0063. The FAA has determined that an inspection interval of 1,000 hours time-in-service (for both the CDU cone brake and the electro-mechanical brake) provides a sufficient level of safety for the modified thrust reversers, and that 650 hours time-in-service (for the CDU cone brake) provides a sufficient level of safety for the unmodified thrust reversers, given the low holding torque condition that has been identified for the CDU cone brake.

Interim Action

This is considered to be interim action. The manufacturer has advised that it currently is developing a modification that will positively address the unsafe condition addressed by this AD. Once this modification is developed, approved, and available, the FAA may consider additional rulemaking.

Cost Impact

There are approximately 143 Boeing Model 767 series airplanes equipped with General Electric CF6–80C2 series engines in the worldwide fleet. The FAA estimates that 45 airplanes of U.S. registry would be affected by this proposed AD.

The tests, inspections, and adjustments that are currently required by AD 95–13–12, and retained in this proposed AD, take approximately 30 work hours per airplane to accomplish, at an average labor rate of $60 per work hour. Based on these figures, the cost impact on U.S. operators of the currently required tests, inspections, and adjustments that are retained in this proposed AD is estimated to be $81,000, or $1,800 per airplane, per inspection cycle.

The terminating modification currently required by AD 95–13–12, and retained in this proposed AD, take approximately 786 work hours per airplane to accomplish, at an average labor rate of $60 per work hour. Required parts will be provided by the manufacturer at no cost to the operator. Based on these figures, the cost impact on U.S. operators of the terminating modification required by this proposed AD is estimated to be $2,122,200, or $47,160 per airplane.

The repetitive operational checks required by AD 95–13–12, and retained in this proposed AD, take approximately 2 work hours per airplane to accomplish, at an average labor rate of $60 per work hour. Based on these figures, the cost impact on U.S. operators of the repetitive operational checks required by this proposed AD is estimated to be $5,400, or $120 per airplane, per operational check cycle.

The cost impact figures discussed above are based on assumptions that no operator has yet accomplished any of the current or proposed requirements of this AD action, and that no operator would accomplish those actions in the future if this AD were not adopted.

The FAA has been advised that the terminating modification has been accomplished in accordance with the

requirements of this AD on 45 U.S.-registered airplanes. Therefore, the future economic cost impact of this rule on U.S. operators is now only the cost associated with the repetitive operational checks required by this AD.

The number of required work hours for each requirement of AD 95–13–12 R1, as indicated above, is presented as if the accomplishment of the actions were to be conducted as ''stand alone'' actions. However, in actual practice, these actions for the most part will be accomplished coincidentally or in combination with normally scheduled airplane inspections and other maintenance program tasks. Therefore, the actual number of necessary additional work hours will be minimal in many instances. Additionally, any costs associated with special airplane scheduling will be minimal.

Regulatory Impact

The regulations proposed herein would not have substantial direct effects on the States, on the relationship between the national government and the States, or on the distribution of power and responsibilities among the various levels of government. Therefore, in accordance with Executive Order 12612, it is determined that this proposal would not have sufficient federalism implications to warrant the preparation of a Federalism Assessment.

For the reasons discussed above, I certify that this proposed regulation (1) is not a ''significant regulatory action'' under Executive Order 12866; (2) is not a ''significant rule'' under the DOT Regulatory Policies and Procedures (44 FR 11034, February 26, 1979); and (3) if promulgated, will not have a significant economic impact, positive or negative, on a substantial number of small entities under the criteria of the Regulatory Flexibility Act. A copy of the draft regulatory evaluation prepared for this action is contained in the Rules Docket. A copy of it may be obtained by contacting the Rules Docket at the location provided under the caption **ADDRESSES.**

List of Subjects in 14 CFR Part 39

Air transportation, Aircraft, Aviation safety, Safety.

The Proposed Amendment

Accordingly, pursuant to the authority delegated to me by the Administrator, the Federal Aviation Administration proposes to amend part 39 of the Federal Aviation Regulations (14 CFR part 39) as follows:

PART 39—AIRWORTHINESS DIRECTIVES

1. The authority citation for part 39 continues to read as follows:

Authority: 49 U.S.C. 106(g), 40113, 44701.

§ 39.13 [Amended]

2. Section 39.13 is amended by removing amendment 39–9528 (61 FR 9092, March 7, 1996), and by adding a new airworthiness directive (AD), to read as follows:

Boeing: Docket 98–NM–231–AD. Supersedes AD 95–13–12 R1, Amendment 39–9528.

Applicability: Model 767 series airplanes equipped with General Electric CF6–80C2 series engines, certificated in any category.

Note 1: This AD applies to each airplane identified in the preceding applicability provision, regardless of whether it has been modified, altered, or repaired in the area subject to the requirements of this AD. For airplanes that have been modified, altered, or repaired so that the performance of the requirements of this AD is affected, the owner/operator must request approval for an alternative method of compliance in accordance with paragraph (g)(1) of this AD. The request should include an assessment of the effect of the modification, alteration, or repair on the unsafe condition addressed by this AD; and, if the unsafe condition has not been eliminated, the request should include specific proposed actions to address it.

Compliance: Required as indicated, unless accomplished previously.

To ensure the integrity of the fail safe features of the thrust reverser system by preventing possible failure modes in the thrust reverser control system that can result in inadvertent deployment of a thrust reverser during flight, accomplish the following:

Restatement of Requirements of AD 95–13–12 R1, Amendment 39–9528:

(a) Within 30 days after August 18, 1995 (the effective date of AD 95–13–12 R1, amendment 39–9528), perform tests, inspections, and adjustments of the thrust reverser system in accordance with Boeing Service Bulletin 767–78–0047, Revision 3, dated July 28, 1994.

(1) Except as provided by paragraph (a)(2) of this AD, repeat all tests and inspections thereafter at intervals not to exceed 3,000 flight hours until the modification required by paragraph (c) of this AD is accomplished.

(2) Repeat the check of the grounding wire for the Directional Pilot Valve (DPV) of the thrust reverser in accordance with the service bulletin at intervals not to exceed 1,500 flight hours, and whenever maintenance action is taken that would disturb the DPV grounding circuit, until the modification required by paragraph (c) of this AD is accomplished.

(b) If any of the tests and/or inspections required by paragraph (a) of this AD cannot be successfully performed, or if those tests and/or inspections result in findings that are unacceptable in accordance with Boeing Service Bulletin 767–78–0047, Revision 3, dated July 28, 1994; accomplish paragraphs (b)(1) and (b)(2) of this AD.

(1) Prior to further flight, deactivate the associated thrust reverser in accordance with Section 78–31–1 of Boeing Document D630T002, ''Boeing 767 Dispatch Deviation Guide,'' Revision 9, dated May 1, 1991; or Revision 10, dated September 1, 1992. After August 18, 1995, this action shall be accomplished only in accordance with Revision 10 of the Boeing document. No more than one reverser on any airplane may be deactivated under the provisions of this paragraph.

(2) Within 10 days after deactivation of any thrust reverser in accordance with this paragraph, the thrust reverser must be repaired in accordance with Boeing Service Bulletin 767–78–0047, Revision 3, dated July 28, 1994. Additionally, the tests and/or inspections required by paragraph (a) of this AD must be successfully accomplished; once this is accomplished, the thrust reverser must then be reactivated.

(c) Within 3 years after August 18, 1995, install a third locking system on the left-and right-hand engine thrust reversers in accordance with Boeing Service Bulletin 767–78–0063, Revision 2, dated April 28, 1994.

New Requirements of this AD

Note 2: Boeing Service Bulletin 767–78–0063, references General Electric (GE) Service Bulletin 78–135 as an additional source of service information for accomplishment of the third locking system on the thrust reversers. However, the Boeing Service Bulletin does not specify the appropriate revision level, and the GE service bulletin has a new Lockheed Martin title for the same service bulletin: Lockheed Martin Service Bulletin 78–135, Revision 4, dated September 30, 1996. The appropriate revision level for the GE Service Bulletin is Revision 3, dated August 2, 1994. The GE and Lockheed Martin service bulletins are identical, and either may be used for accomplishment of the action described previously.

Note 3: The actions specified in Lockheed Martin Service Bulletin 78–1007, Revision 1, dated March 18, 1997; and Lockheed Martin Service Bulletin 78–1020, Revision 2, dated March 20, 1997; may be accomplished simultaneously in conjunction with Boeing Service Bulletin 767–78–0063 for accomplishment of the installation of the thrust reverser bracket and the thrust reverser lock. (Accomplishment of these two service bulletins together achieves the same results as Lockheed Martin Service Bulletin 78–135, Revision 4, and is acceptable for compliance with Boeing Service Bulletin 767–78–0063.)

(d) Within 1,000 hours time-in-service after the most recent test of the CDU cone brake performed in accordance with paragraph (a) of this AD, or within 650 hours time-in-service after the effective date of this AD, whichever occurs first: Perform a functional test to detect discrepancies of the CDU cone brake on each thrust reverser, in accordance with Boeing Service Bulletin 767–78A0081, Revision 1, dated October 9, 1997, or Appendix 1 (including Figure 1), sections 1.A.(2), 2.A., 2.C., and 2.D of this AD.

(1) For Model 767 series airplanes, line numbers up to and including 474, equipped with thrust reversers that have not been

modified in accordance with Boeing Service Bulletin 767–78–0063: Repeat the functional test of the CDU cone brake thereafter at intervals not to exceed 650 hours time-in-service.

(2) For Model 767 series airplanes, line numbers 475 and subsequent; and Model 767 series airplanes equipped with thrust reversers that have been modified in accordance with Boeing Service Bulletin 767–78–0063: Repeat the functional test of the CDU cone brake thereafter at intervals not to exceed 1,000 hours time-in-service.

(e) Within 1,000 flight hours after accomplishing the modification required by paragraph (c) of this AD, or within 1,000 flight hours after the effective date of this AD, whichever occurs later: Perform operational checks of the electro-mechanical brake in accordance with Appendix 1 (including Figure 1), sections 1.A.(1), 2.A., 2.B., and 2.D of this AD. Repeat the operational checks thereafter at intervals not to exceed 1,000 flight hours.

Terminating Action

(f) Accomplishment of the modification and periodic operational checks required by paragraphs (c), (d), and (e) of this AD constitutes terminating action for the tests, inspections, and adjustments required by paragraph (a) of this AD.

Alternative Methods of Compliance

(g)(1) An alternative method of compliance or adjustment of the compliance time that provides an acceptable level of safety may be used if approved by the Manager, Seattle Aircraft Certification Office (ACO), FAA, Transport Airplane Directorate. Operators shall submit their requests through an appropriate FAA Principal Maintenance Inspector, who may add comments and then send it to the Manager, Seattle ACO.

(g)(2) Alternative methods of compliance, approved previously in accordance with AD 95–13–12, amendment 39–9292, are approved as alternative methods of compliance with this AD.

Note 4: Information concerning the existence of approved alternative methods of compliance with this AD, if any, may be obtained from the Seattle ACO.

Special Flight Permits

(h) Special flight permits may be issued in accordance with §§ 21.197 and 21.199 of the Federal Aviation Regulations (14 CFR 21.197 and 21.199) to operate the airplane to a location where the requirements of this AD can be accomplished.

Appendix 1—Thrust Reverser Electro-Mechanical Brake and CDU Cone Brake Test

1. General

A. This procedure contains steps to do two checks:

(1) A check of the holding torque of the electro-mechanical brake.

(2) A check of the holding torque of the CDU cone brake.

2. Electro-Mechanical Brake and CDU Cone Brake Torque Check (Fig. 1)

A. Prepare to do the checks:

(1) Open the fan cowl panels.

B. Do a check of the torque of the electro-mechanical brake:

(1) Do a check of the running torque of the thrust reverser system:

(a) Manually extend the thrust reverser six inches and measure the running torque.

(1) Make sure the torque is less than 10 pound-inches.

(2) Do a check of the electro-mechanical brake holding torque:

(a) Make sure the thrust reverser translating cowl is extended at least one inch.

(b) Make sure the CDU lock handle is released.

(c) Pull down on the manual release handle on the electro-mechanical brake until the handle fully engages the retaining clip.

Note: This will lock the electro-mechanical brake.

(d) With the manual drive lockout cover removed from the CDU, install a ¼-inch extension tool and dial-type torque wrench into the drive pad.

Note: You will need a 24-inch extension to provide adequate clearance for the torque wrench.

(e) Apply 90 pound-inches of torque to the system.

(1) The electro-mechanical brake system is working correctly if the torque is reached before you turn the wrench 450 degrees (1–1/4 turns).

(2) If the flexshaft turns more than 450 degrees before you reach the specified torque, you must replace the long flexshaft between the CDU and the upper angle gearbox.

(3) If you do not get 90 pound-inches of torque, you must replace the electro-mechanical brake.

(f) Release the torque by turning the wrench in the opposite direction until you read zero pound-inches.

(1) If the wrench does not return to within 30 degrees of initial starting point, you must replace the long flexshaft between the CDU and upper angle gearbox.

(3) Fully retract the thrust reverser.

C. Do a check of the CDU cone brake:

(1) Pull up on the manual release handle to unlock the electro-mechanical brake.

(2) Pull the manual brake release lever on the CDU to release the cone brake.

Note: This will release the pre-load tension that may occur during a stow cycle.

(3) Return the manual brake release lever to the locked position to engage the cone brake.

(4) Remove the two bolts that hold the lockout plate to the CDU and remove the lockout plate.

(5) Install a ¼-inch drive and a dial type torque wrench into the CDU drive pad.

CAUTION: DO NOT USE MORE THAN 100 POUND-INCHES OF TORQUE WHEN YOU DO THIS CHECK. EXCESSIVE TORQUE WILL DAMAGE THE CDU.

(6) Turn the torque wrench to try to manually extend the translating cowl until you get at lease 15-pound inches.

Note: The cone brake prevents movement in the extend direction only. If you try to measure the holding torque in the retract direction, you will get a false reading.

(a) If the torque is less than 15-pound-inches, you must replace the CDU.

D. Return the airplane to its usual condition:

(1) Fully retract the thrust reverser (unless already accomplished).

(2) Pull down on the manual release handle on the electro-mechanical brake until the handle fully engages the retaining clip (unless already accomplished).

Note: This will lock the electro-mechanical brake.

(3) Close the fan cowl panels.

BILLING CODE 4910–13–P

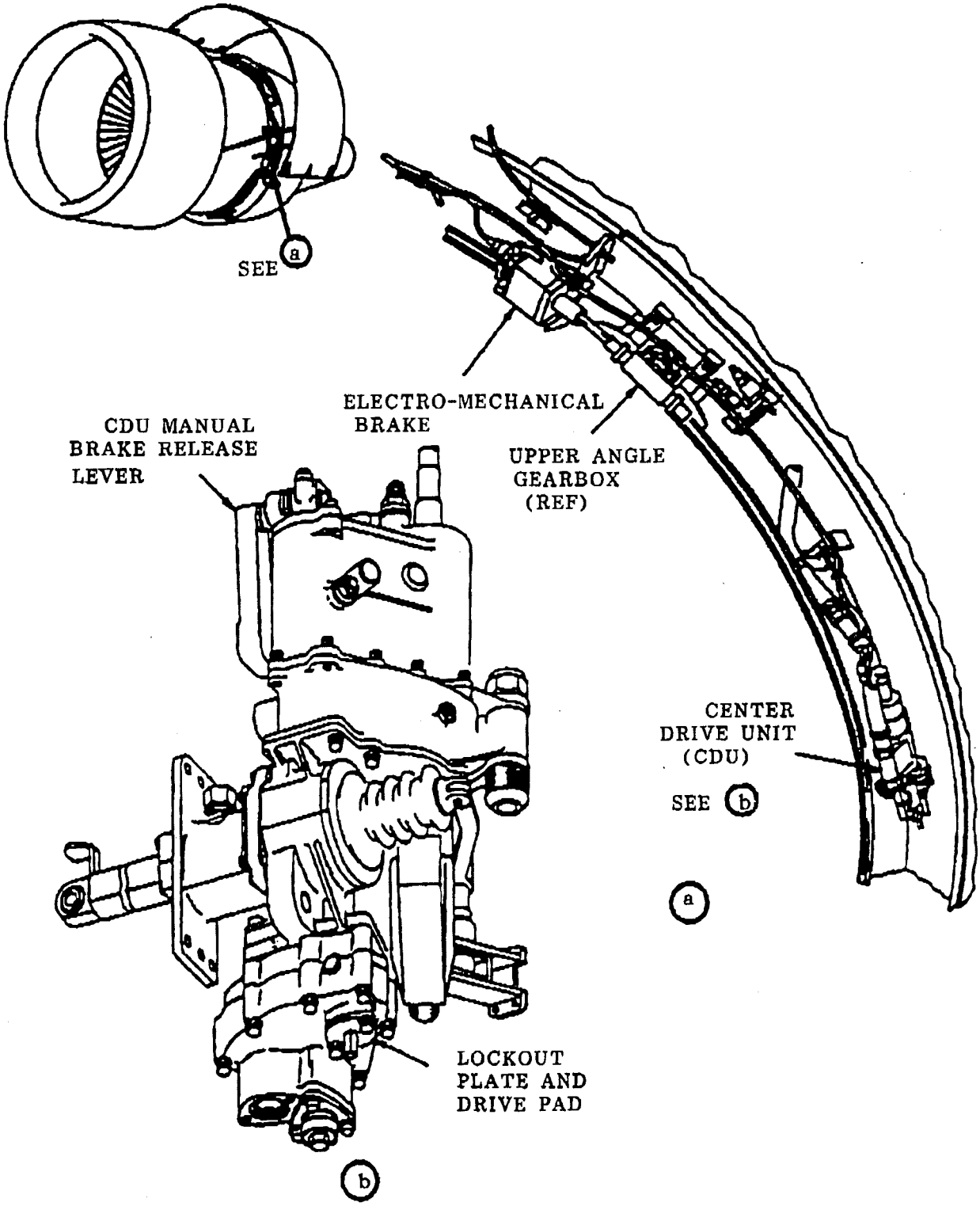

Electro-Mechanical Brake and CDU Cone Brake Torque Check
Figure 1

Issued in Renton, Washington, on June 4, 1999.

Vi L. Lipski,

Acting Manager, Transport Airplane Directorate, Aircraft Certification Service.

[FR Doc. 99–14818 Filed 6–11–99; 8:45 am]

BILLING CODE 4910–13–C

DEPARTMENT OF THE TREASURY

Internal Revenue Service

26 CFR Part 1

[REG–115086–98]

RIN 1545–AW55

The Solely for Voting Stock Requirement in Certain Corporate Reorganizations

AGENCY: Internal Revenue Service (IRS), Treasury.

ACTION: Notice of proposed rulemaking and notice of public hearing.

SUMMARY: This document contains proposed regulations relating to the solely for voting stock requirement in certain corporate reorganizations under section 368(a)(1)(C) of the Internal Revenue Code. The proposed regulations provide that prior ownership of a portion of a target corporation's stock by an acquiring corporation generally will not prevent the solely for voting stock requirement in a ''C'' reorganization of the target corporation and the acquiring corporation from being satisfied. This document also provides notice of a public hearing on these proposed regulations.

DATES: Written comments must be received by September 13, 1999. Requests to speak and outlines of topics to be discussed at the hearing scheduled for October 5, 1999, must be received by September 13, 1999.

ADDRESSES: Send submissions to: CC:DOM:CORP:R (REG–115086–98), room 5226, Internal Revenue Service, POB 7604, Ben Franklin Station, Washington, DC 20044. Submissions may be hand delivered Monday through Friday between the hours of 8 a.m. and 5 p.m. to CC:DOM:CORP:R (REG–115086–98), Courier's Desk, Internal Revenue Service, 1111 Constitution Avenue NW., Washington, DC. Alternatively, taxpayers may submit comments electronically via the Internet by selecting the ''Tax Regs'' option on the IRS Home Page, or by submitting comments directly to the IRS Internet site at http://www.irs.ustreas.gov/tax—regs/regslist.html. The public hearing will be held in Room 2615, Internal Revenue Building, 1111 Constitution Avenue, NW., Washington, DC.

FOR FURTHER INFORMATION CONTACT: Concerning the regulations, Marnie Rapaport, (202) 622–7550; concerning submissions of comments, the hearing, and/or to be placed on the building access list to attend the hearing, Guy R. Traynor, (202) 622–7190 (not toll-free numbers).

SUPPLEMENTARY INFORMATION:

Background

A. General Information

This document contains proposed amendments to the Income Tax Regulations (26 CFR part 1) under section 368(a)(1)(C) relating to the definition of a ''C'' reorganization. A ''C'' reorganization is described as the acquisition by one corporation of substantially all of the properties of a target corporation in exchange solely for voting stock of the acquiring corporation (or solely for voting stock of its parent). See section 368(a)(1)(C). The use of money or other property will not prevent an exchange from qualifying under section 368(a)(1)(C) if at least 80 percent of the gross fair market value of all of the property of the target corporation is acquired for voting stock (the so-called boot relaxation rule). See section 368(a)(2)(B). The proposed regulations provide that prior ownership of a portion of a target corporation's stock by an acquiring corporation generally will not prevent the solely for voting stock requirement in a ''C'' reorganization of the target corporation and the acquiring corporation from being satisfied. These regulations propose to reverse the IRS's longstanding position that the acquisition of assets of a partially controlled subsidiary does not qualify as a tax-free reorganization under section 368(a)(1)(C).

B. The Bausch & Lomb Doctrine

The IRS's position that the acquisition of assets of a partially controlled subsidiary does not qualify as a tax-free reorganization under section 368(a)(1)(C) is articulated in Rev. Rul. 54–396 (1954–2 C.B. 147). This position subsequently was sustained in litigation in *Bausch & Lomb Optical Co.* v. *Commissioner*, 30 T.C. 602 (1958), *aff'd*, 267 F.2d 75 (2d Cir.), *cert. denied*, 361 U.S. 835 (1959) (the *Bausch & Lomb* doctrine). In Rev. Rul. 54–396, a parent corporation owning 79 percent of the stock of a subsidiary as the result of a prior unrelated cash purchase acquires all of the assets of the subsidiary in exchange for a block of the parent's voting stock. The block of the parent's stock that has been transferred to the subsidiary is then distributed in liquidation pro rata to its shareholders. The ruling concludes that the transaction does not qualify as a ''C'' reorganization under the 1939 Internal Revenue Code, but rather is a taxable liquidation of the subsidiary. The rationale of the revenue ruling is that the acquisition violates the solely for voting stock requirement, because the parent corporation acquires only 21 percent of the subsidiary's assets in exchange for the parent's voting stock, while the remaining 79 percent of the subsidiary's assets is acquired as a liquidating distribution in exchange for the previously held stock of the subsidiary.

In *Bausch & Lomb* (which had nearly identical facts to Rev. Rul. 54–396), the parent corporation, Bausch & Lomb, owned 79.9 percent of the stock of Riggs Optical Company. In order to acquire the assets of Riggs, Bausch & Lomb exchanged shares of its voting stock for all of the Riggs assets. Pursuant to a prearranged plan, Riggs subsequently was dissolved and distributed its only asset, the Bausch & Lomb shares, pro rata to its shareholders. The Tax Court and the Second Circuit Court of Appeals sustained the Commissioner's contention that the acquisition of the Riggs assets and the dissolution of Riggs should be viewed together as part of a single plan, and that the surrender by Bausch & Lomb of its Riggs stock constituted nonstock consideration in violation of the ''C'' reorganization requirements.

C. The Solely for Voting Stock Requirement

The ''C'' reorganization first appeared in 1921 when a tax-free reorganization was defined as a merger or consolidation ''including the acquisition by one corporation * * * of substantially all of the properties of another corporation.'' Revenue Act of 1921, section 202(c)(2), 42 Stat. 227, 230. The statutory language failed to limit the type of permissible consideration, arguably allowing an acquisition for cash to qualify as a merger.

In 1934, Congress restricted the permissible consideration in an acquisition of a target's stock or assets (in other than a statutory merger or consolidation) to voting stock. Revenue Act of 1934, section 112(g)(1), 48 Stat. 680, 705. The stated purpose for this limitation was to ''remove the danger that taxable sales [could] be cast into the form of a reorganization.'' See H.R. Rep. No. 704, 73d Cong., 2d Sess. 12–14 (1934), 1939–1 C.B. (Part 2) 554, 563–565; S. Rep. No. 558, 73d Cong., 2d Sess. 16–17 (1934), 1939–1 C.B. (Part 2) 586, 598–599.

D. Reasons for Change

The legislative history of the ''C'' reorganization provisions provides that the purpose of the solely for voting

stock requirement in section 368(a)(1)(C) is to prevent transactions that resemble sales from qualifying for nonrecognition of gain or loss available to corporate reorganizations. The IRS and Treasury Department have concluded that a transaction in which the acquiring corporation converts an indirect ownership interest in assets to a direct interest in those assets does not resemble a sale and, thus, have concluded that Congress did not intend to disqualify a transaction from qualifying under section 368(a)(1)(C) merely because the acquiring corporation has prior ownership of a portion of a target corporation's stock. Because the judicial doctrine of continuity of interest arose from similar concerns, the regulations under § 1.368–1(e)(1)(i) reach a similar conclusion with respect to the continuity of interest doctrine.

Moreover, the taxable treatment of the ''upstream'' ''C'' reorganization under the *Bausch & Lomb* doctrine contrasts with the tax-free treatment of the ''upstream'' ''A'' reorganization under section 368(a)(1)(A). See also Rev. Rul. 57–278 (1957–1 C.B. 124) (*Bausch & Lomb* does not apply to an asset acquisition by a newly formed corporation in exchange for its parent's stock, even though prior to the acquisition the parent already owned 72 percent of the transferor's stock). In the ''upstream'' ''A'' reorganization, the indirect interest of the parent in the assets of its subsidiary (i.e., the target corporation) is converted into a direct interest in the subsidiary's assets. An exchange is deemed to occur for purposes of section 354 even if, in form, one does not occur. The IRS and Treasury Department have concluded that the ''upstream'' reorganization under section 368(a)(1)(C) (i.e., the *Bausch & Lomb* transaction) should not be treated differently from the ''upstream'' ''A'' reorganization solely because the acquiring corporation already owns stock in the target corporation. Accordingly, the IRS and Treasury Department have concluded that the *Bausch & Lomb* doctrine does not further the principles of reorganization treatment.

Explanation of Provisions

The proposed regulations provide that preexisting ownership of a portion of a target corporation's stock by an acquiring corporation generally will not prevent the solely for voting stock requirement in a ''C'' reorganization from being satisfied. If the boot relaxation rule applies, the sum of (i) the money or other property that is distributed in pursuance of the plan of reorganization to the shareholders of the target corporation other than the acquiring corporation and to the creditors of the target corporation pursuant to section 361(b)(3), and (ii) the assumption of all the liabilities of the target corporation (including liabilities to which the properties of the target corporation are subject), cannot exceed 20 percent of the value of all of the properties of the target corporation. In this regard, the proposed regulations provide that if, in connection with a potential ''C'' reorganization of a target corporation into an acquiring corporation, the acquiring corporation acquires the target corporation's stock for consideration other than its own voting stock (or voting stock of a corporation in control of the acquiring corporation if such stock is used in the acquisition of the target corporation's properties), whether from a shareholder of the target corporation or from the target corporation itself, such consideration will be treated as money or other property exchanged by the acquiring corporation for the target corporation's assets. Accordingly, the requirements of section 368(a)(1)(C) will not be satisfied unless the transaction can qualify under the boot relaxation rule of section 368(a)(2)(B). The determination of whether there has been an acquisition in connection with a potential ''C'' reorganization of a target corporation's stock for consideration other than an acquiring corporation's own voting stock (or voting stock of a corporation in control of the acquiring corporation if such stock is used in the acquisition of the target corporation's properties) will be made on the basis of all of the facts and circumstances.

Rev. Rul. 54–396 (1954–2 C.B. 147) will become obsolete when the proposed regulations are issued in final form.

The regulations are proposed to apply to transactions occurring after the date that a Treasury decision adopting these rules is published in the **Federal Register**, except that they do not apply to any transactions occurring pursuant to a written agreement which is (subject to customary conditions) binding on the date the regulations are published as final regulations in the **Federal Register**, and at all times thereafter.

Special Analyses

It has been determined that this notice of proposed rulemaking is not a significant regulatory action as defined in EO 12866. Therefore, a regulatory assessment is not required. It also has been determined that section 553(b) of the Administrative Procedure Act (5 U.S.C. chapter 5) does not apply to these proposed regulations and, because the proposed regulations do not impose a collection of information on small entities, the Regulatory Flexibility Act (5 U.S.C. chapter 6) does not apply. Therefore, a Regulatory Flexibility Analysis is not required. Pursuant to section 7805(f) of the Internal Revenue Code, these regulations will be submitted to the Chief Counsel for Advocacy of the Small Business Administration for comment on its impact on small business.

Comments and Public Hearing

Before these proposed regulations are adopted as final regulations, consideration will be given to any written comments (a signed original and eight (8) copies) that are timely submitted to the IRS. The IRS and Treasury request comments on the clarity of the proposed rule and how it may be made easier to understand. All comments will be available for public inspection and copying.

A public hearing has been scheduled for October 5, 1999, beginning at 10:00 a.m. in Room 2615 of the Internal Revenue Building, 1111 Constitution Avenue, NW., Washington, DC. Due to building security procedures, visitors must enter at the 10th Street entrance, located between Constitution and Pennsylvania Avenues, NW. In addition, all visitors must present photo identification to enter the building. Because of access restrictions, visitors will not be admitted beyond the immediate entrance area more than 15 minutes before the hearing starts. For information about having your name placed on the building access list to attend the hearing, see the **FOR FURTHER INFORMATION CONTACT** section of this preamble.

The rules of 26 CFR 601.601(a)(3) apply to the hearing. Persons who wish to present oral comments at the hearing must request to speak, and submit written comments and an outline of the topics to be discussed and the time to be devoted to each topic (signed original and eight (8) copies) by September 13, 1999. A period of ten minutes will be allocated to each person for making comments. An agenda showing the scheduling of the speakers will be prepared after the deadline for receiving outlines has passed. Copies of the agenda will be available free of charge at the hearing.

Drafting Information: The principal author of these regulations is Marnie Rapaport of the Office of the Assistant Chief Counsel (Corporate), IRS. However, other personnel from the IRS and Treasury Department participated in their development.

List of Subjects in 26 CFR Part 1

Income taxes, Reporting and recordkeeping requirements.

Proposed Amendments to the Regulations

Accordingly, 26 CFR part 1 is proposed to be amended as follows:

PART 1—INCOME TAXES

Paragraph 1. The authority citation for part 1 continues to read in part as follows:

Authority: 26 U.S.C. 7805. * * *

Par. 2. Section 1.368–2 is amended by adding paragraph (d)(4) to read as follows:

§ 1.368–2 Definition of terms.

* * * * *

(d) * * *

(4) (i) For purposes of paragraphs (d)(1) and (2)(ii) of this section, prior ownership of a portion of the stock of the target corporation by an acquiring corporation will not by itself prevent the solely for voting stock requirement of such paragraphs from being satisfied. In a transaction in which the acquiring corporation has prior ownership of a portion of the stock of the target corporation, the requirement of paragraph (2)(ii) is satisfied only if the sum of the money or other property that is distributed in pursuance of the plan of reorganization to the shareholders of the target corporation other than the acquiring corporation and to the creditors of the target corporation pursuant to section 361(b)(3), and all of the liabilities of the target corporation assumed by the acquiring corporation (including liabilities to which the properties of the target corporation are subject), does not exceed 20 percent of the value of all of the properties of the target corporation. If, in connection with a potential acquisition by an acquiring corporation of substantially all of a target corporation's properties, the acquiring corporation acquires the target corporation's stock for consideration other than the acquiring corporation's own voting stock (or voting stock of a corporation in control of the acquiring corporation if such stock is used in the acquisition of the target corporation's properties), whether from a shareholder of the target corporation or the target corporation itself, such consideration is treated, for purposes of paragraphs (d)(1) and (2) of this section, as money or other property exchanged by the acquiring corporation for the target corporation's properties. Accordingly, the transaction will not qualify under section 368(a)(1)(C) unless, treating such consideration as money or other property, the requirements of section 368(a)(2)(B) and paragraph (d)(2)(ii) of this section are met. The determination of whether there has been an acquisition in connection with a potential reorganization under section 368(a)(1)(C) of a target corporation's stock for consideration other than an acquiring corporation's own voting stock (or voting stock of a corporation in control of the acquiring corporation if such stock is used in the acquisition of the target corporation's properties) will be made on the basis of all of the facts and circumstances.

(ii) The following examples illustrate the principles of this paragraph (d)(4):

Example 1. Corporation P (P) holds 60 percent of the Corporation T (T) stock that P purchased several years ago in an unrelated transaction. T has 100 shares of stock outstanding. The other 40 percent of the T stock is owned by Corporation X (X), an unrelated corporation. T has properties with a fair market value of $110 and liabilities of $10. T transfers all of its properties to P. In exchange, P assumes the $10 of liabilities, and transfers to T $30 of P voting stock and $10 of cash. T distributes the P voting stock and $10 of cash to X and liquidates. The transaction satisfies the solely for voting stock requirement of paragraph (d)(2)(ii) of this section because the sum of $10 of cash paid to X and the assumption by P of $10 of liabilities does not exceed 20% of the value of the properties of T.

Example 2. The facts are the same as in *Example 1* except that P purchased the 60 shares of T for $60 in cash in connection with the acquisition of T's assets. The transaction does not satisfy the solely for voting stock requirement of paragraph (d)(2)(ii) of this section because P is treated as having acquired all of the T assets for consideration consisting of $70 of cash, $10 of liability assumption and $30 of P voting stock, and the sum of $70 of cash and the assumption by P of $10 of liabilities exceeds 20% of the value of the properties of T.

(iii) This paragraph (d)(4) applies to transactions occurring after the date these regulations are published as final regulations in the **Federal Register**, except that this paragraph (d)(4) does not apply to any transactions occurring pursuant to a written agreement which is (subject to customary conditions) binding on the date the regulations are published as final regulations in the **Federal Register**, and at all times thereafter.

* * * * *

Robert E. Wenzel,

Deputy Commissioner of Internal Revenue.

[FR Doc. 99–14889 Filed 6–11–99; 8:45 am]

BILLING CODE 4830–01–P

ENVIRONMENTAL PROTECTION AGENCY

40 CFR Part 82

[FRL–6358–4]

RIN 2060–AH99

Protection of Stratospheric Ozone: Reconsideration of the 610 Nonessential Products Ban

AGENCY: Environmental Protection Agency (EPA).

ACTION: Proposed rule.

SUMMARY: This proposed rulemaking proposes changes to the current regulations that implement the statutory ban on nonessential products that release class I ozone-depleting substances under section 610 of the Clean Air Act, as amended. This proposed rulemaking was developed by EPA based on new and compelling information that has been gathered and indicates that some sectors continue to use class I substances in products where the use of those substances today should be considered a ''nonessential use of class I substances in a product.'' The products affected by this rulemaking are aerosol products, pressurized dispensers, plastic foam products, and air-conditioning and refrigeration products that contain or are manufactured with chlorofluorocarbons.

DATES: Comments must be received by August 13, 1999 unless a public hearing is held. A public hearing, *if requested*, will be held in Washington, D.C. If such a hearing is requested, it will be held on June 29, 1999. Anyone who wishes to request a hearing should call Cindy Newberg at 202/564–9729 by 5 pm Eastern Time June 21, 1999. Ater that time, interested parties may contact the Stratospheric Protection hotline regarding if a hearing will be held as well as the time and place of such a hearing. If a public hearing is held, the comment period will be extended until August 30, 1999.

ADDRESSES: Comments on this action should be addressed to Public Docket No, A–98–31 at the address below. Comments and materials supporting this rulemaking are contained in Public Docket No. A–98–31 Waterside Mall (Ground Floor) Environmental Protection Agency, 401 M Street, SW., Washington, D.C. 20460 in room M–1500. Dockets may be inspected from 8:00 a.m. until 5:30 p.m., Monday through Friday. A reasonable fee may be charged for copying docket materials.

FOR FURTHER INFORMATION CONTACT: Cindy Newberg, Program Implementation Branch, Stratospheric

Protection Division, Office of Atmospheric Programs, Office of Air and Radiation (6205–J), 401 M Street, SW., Washington, D.C. 20460, (202)564–9729. The Stratospheric Ozone Information Hotline at 1–800–296–1996 can also be contacted for further information. Interested persons may contact the Stratospheric Protection Hotline to learn if a hearing will be held and to obtain the date and location of any hearing. Any hearing will be strictly limited to the subject matter of this proposal.

SUPPLEMENTARY INFORMATION: The contents of this preamble are listed in the following outline:

I. Regulated Entities
II. Background
A. Class I Ban
1. Reconsideration
2. Determinations Under 610
3. The Purpose or Intended Use of the Product
4. The Technological Availability of Substitutes
5. Safety and Health
6. Medical Devices
7. Other Products
8. Reconsidering Nonessential Determinations
B. Class II Ban
1. Reconsideration
2. Determinations Under Section 610(d)
3. Future Notice of Proposed Rulemaking
III. Today's Action
A. Foam Products
B. Aerosol Products and Pressurized Dispensers
C. Air-conditioning and Refrigeration Appliances
IV. Proposed Effective Dates and Grandfathering
V. Summary of Supporting Analysis
A. Executive Order 12866
B. Regulatory Flexibility
C. Unfunded Mandates Act
D. Paperwork Reduction Act
E. Executive Order 12875: Enhancing the Intergovernmental Partnership
F. National Technology Transfer and Advancement Act
G. Applicability of Executive Order 13045
H. Executive Order 13084: Consultation and Coordination With Indian Tribal Governments

I. Regulated Entities

Entities potentially regulated by this action are those that wish to sell and/or distribute in interstate commerce aerosols, pressurized dispensers, plastic foam products, refrigerators and air-conditioning equipment that contain chlorofluorocarbons (CFCs). Regulated categories and entities include:

Category	Example of regulated entities
Industry	Aerosol packagers. Aerosol manufacturers. Air-conditioning and refrigeration equipment manufacturers. Specialty chemical manufacturers. Foam manufacturers. Air conditioning and refrigeration distributors. Air conditioning and refrigeration retailers.

This table is not intended to be exhaustive, but rather provides a guide for readers regarding entities likely to be regulated by this action. This table lists the types of entities that EPA is now aware could potentially be affected by this action. Other types of entities not listed in the table could also be affected. To determine whether your company is regulated by this action, you should carefully examine the applicability criteria contained in Section 610 of the Clean Air Amendments of 1990, discussed in regulations codified at 40 CFR Part 82, subpart C and published on January 15, 1993 (58 FR 4768); December 30, 1993 (58 FR 69672) and discussed below. If you have questions regarding the applicability of this action to a particular entity, consult the person listed in the preceding **FOR FURTHER INFORMATION CONTACT** section.

II. Background

Title VI of the Act divides ozone-depleting chemicals into two distinct classes. Class I is comprised of chlorofluorocarbons (CFCs), halons, carbon tetrachloride and methyl chloroform, methyl bromide and hydrobromofluorocarbons. Class II is comprised of hydrochlorofluorocarbons (HCFCs). (See listing notice January 22, 1991; 56 FR 2420.) Section 610(b) of the Act, as amended, requires EPA to promulgate regulations banning nonessential products releasing class I substances. EPA published a final rule for the Class I Nonessential Products Ban on January 15, 1993 (58 FR 4768). A final rule establishing regulations that implemented the statutory ban on nonessential products containing or manufactured with class II ozone-depleting substances under section 610(d) of the Clean Air Act, as amended, was issued December 30, 1993 (58 FR 69637). That final rule was developed to clarify definitions and provide exemptions, as authorized under section 610(d). All of the regulations are codified at 40 CFR Part 82 subpart C. Comments and materials supporting those rulemakings are contained in Public Dockets A–91–39 and in A–93–20.

A. Class I Ban

Section 610(b) of the Act directs EPA to identify nonessential products that ''release Class I substances into the environment (including any release during manufacture, use, storage, or disposal)'' and to ''prohibit any person from selling or distributing any such product, or offering any such product for sale or distribution, in interstate commerce.''

Section 610(b)(1) and (2) specify products to be prohibited under this requirement, including ''chlorofluorocarbon-propelled plastic party streamers and noise horns'' and ''chlorofluorocarbon-containing cleaning fluids for noncommercial electronic and photographic equipment.''

Section 610(b)(3) extends the prohibition to other products determined by EPA to release class I substances and to be nonessential. In determining whether a product is nonessential, EPA is to consider the following criteria: ''the purpose or intended use of the product, the technological availability of substitutes for such product and for such Class I substance, safety, health, and other relevant factors.''

The regulatory Class I Ban currently identifies as nonessential, and therefore subject to the prohibitions:

(A) plastic party streamers and noise horns propelled by chlorofluorocarbons;

(B) cleaning fluids for electronic and photographic equipment which contain a chlorofluorocarbon, including but not limited to liquid packaging, solvent wipes, solvent sprays, and gas sprays, except for those sold or distributed to a commercial purchaser;

(C) plastic flexible or packaging foam product which is manufactured with or contains a chlorofluorocarbon, including but not limited to,

- Open cell polyurethane flexible slabstock foam,
- Open cell polyurethane flexible molded foam,
- Open cell rigid polyurethane poured foam,
- Closed cell extruded polystyrene sheet foam,
- Closed cell polyethylene foam, and
- Closed cell polypropylene foam,

except flexible or packaging foam used in coaxial cable; and

(D) any aerosol product or other pressurized dispenser which contains a chlorofluorocarbon, *except:*

- Medical devices listed in 21 CFR 2.125(e),
- Lubricants for pharmaceutical and tablet manufacture,
- Gauze bandage adhesives and adhesive removers,

- Topical anesthetic and vapocoolant products,
- Lubricants, coatings or cleaning fluids for electrical or electronic equipment, which contain CFC–11, CFC–12, or CFC–113 for solvent purposes, but which contain no other CFCs,
- Lubricants, coatings or cleaning fluids used for aircraft maintenance, which contain CFC-11 or CFC–113, but which contain no other CFCs,
- Mold release agents used in the production of plastic and elastomeric materials, which contain CFC–11 or CFC–113, but which contain no other CFCs,
- Spinnerette lubricant/cleaning sprays used in the production of synthetic fibers, which contain CFC–114, but which contain no other CFCs,
- Containers of CFCs used as halogen ion sources in plasma etching,
- Document preservation sprays which contain CFC–113, but which contain no other CFCs, and
- Red pepper bear repellent sprays which contain CFC–113, but which contain no other CFCs.

Verification and public notice requirements have been established for distributors of certain products intended exclusively for commercial use.

The preamble to the 1993 rulemaking established that EPA should in the future reconsider exceptions granted and limitations of the ban under that rulemaking based on new and compelling information regarding the availability of substitutes for class I substances. In 1993 EPA limited consideration of banned products to aerosols, pressurized dispensers, and foams. These sectors traditionally used ozone-depleting substances and were subject to the Class I Ban. Since that rulemaking was issued, the phaseout of production and consumption of class I substances has become effective and the Significant New Alternatives Policy (SNAP) program established under Section 612 of the Act has been promulgated. The phaseout of newly manufactured class I substances and the identification of acceptable substitutes provide compelling reasons to reconsider the initial decisions regarding both product-specific exemptions and the decision to limit the ban's effect to major sectors that traditionally used ozone-depleting substances. Therefore, it is appropriate now to reconsider the applicability of the Class I Ban to both specific products and product categories.

1. Reconsideration

The regulations implementing the Class I Ban provide for EPA to reconsider decisions that were made regarding specific products and product categories. EPA indicated in 1993 that the Agency would reconsider decisions in the future based on developments of product substitutes not containing class I substances. EPA has previously reconsidered specific decisions. In December 1993 (58 FR 69672), EPA reconsidered the application of the Class I Ban to replacement parts that were previously manufactured and stored for future use, such as car seats designed and manufactured for a particular model vehicle.

Based on development of new substitutes and the characterization of the criteria for nonessentiality discussed below, particularly as applied to the use of class I substances in products that are themselves not nonessential, EPA believes that it is now appropriate for EPA to reconsider previous determinations. Specifically, it is appropriate to reconsider the determinations for the air-conditioning and refrigeration, solvents, and foam-blowing sectors.

2. Determinations Under 610

As stated above, Section 610(b)(3) extends the prohibition to other products determined by EPA to release class I substances and to be nonessential. In determining whether a product is nonessential, EPA is to consider the following criteria: ''the purpose or intended use of the product, the technological availability of substitutes for such product and for such class I substance, safety, health, and other relevant factors.'' The statute requires EPA to consider each criterion but did not outline either a ranking or a methodology for comparing their relative importance, nor does it require that any minimum standard within each criterion be met. To develop the initial rulemaking, EPA considered all of these criteria in determining whether a product was nonessential. In addition, EPA reviewed the criteria used in the development of its 1978 ban on aerosol propellant uses of CFCs under the Toxic Substances Control Act (TSCA). Today's action follows the same methodology of that rulemaking.

3. The Purpose or Intended Use of the Product

This criterion relates to the importance of the product, specifically whether the product is sufficiently important that the benefits of its continued production outweigh the associated danger from the continued use of a class I ozone-depleting substance in it, or alternatively, whether the product is so unimportant that even a lack of available substitutes might not prevent the product from being considered nonessential. The initial class I final rulemaking includes a discussion about the contributions of a product to the quality of life.

The distinction between a ''nonessential product'' and a ''nonessential use of class I substances in a product'' is a relevant criterion. For example, while foam cushioning products for beds and furniture are not ''frivolous,'' the use of a class I substance in the manufacturing process for foam cushioning where substitutes are readily available is considered nonessential. The ability of manufacturers to switch from using a class I substance is a relevant indicator for this criterion. The class I final rule states that ''the Agency believes that in sectors where the great majority of manufacturers had already shifted to substitutes, the use of a class I substance in that product may very well be nonessential.'' Consequently, EPA believes it is appropriate under this criteria to examine sectors where most of the market has previously switched out of CFCs.

4. The Technological Availability of Substitutes

EPA has previously interpreted this criterion to mean the existence and accessibility of alternative products or alternative chemicals for use in, or in place of, products releasing class I substances. EPA believes that the phrase ''technological availability'' includes both currently available substitutes (i.e., presently produced and sold in commercial quantities) and potentially available substitutes (i.e., determined to be technologically feasible, environmentally acceptable and economically viable, but not yet produced and sold in commercial quantities). However, EPA considered the current availability of substitutes more compelling than the potential availability of substitutes in determining whether a product was nonessential.

The corresponding criterion from the 1978 aerosol ban is the ''nonavailability of alternative products.'' In its supporting documentation, EPA stated that this was the primary criterion for determining if a product had an ''essential use'' under the 1978 rule. EPA emphasized, however, that the absence of an available alternative did not alone disqualify a product from being banned as nonessential.

The availability of substitutes is clearly a critical criterion for determining if a product containing a class I substance is nonessential. In certain cases, a substitute that is

technologically feasible, environmentally acceptable and economically viable, but not yet produced and sold in commercial quantities, may meet this criterion with respect to certain products. However, EPA believes that, where substitutes are readily available, the use of controlled substances could be considered nonessential even in a product that is extremely important. It should be noted, however, that EPA does not necessarily advocate all substitutes that are currently being used in place of CFCs in the products EPA identifies as nonessential. In many cases potential substitutes are subject to other regulatory programs. For example, the SNAP program promulgated under CAA 612 carefully considers the relative risks and merits of different substitutes for ozone-depleting substances. Substitutes are listed under that regulatory program as acceptable, unacceptable, or acceptable subject to use restrictions for specific uses. Within the limited purposes of the nonessential products bans, EPA considers the existence and accessibility of alternative products or alternative chemicals for use in, or in place of, products releasing class I substances. Any future use of such substitutes must comport with any conditions of the SNAP program, if applicable.

5. Safety and Health

EPA interprets these two criteria to mean the effects on human health and the environment of the products releasing class I substances or their substitutes. In evaluating these criteria, EPA considered the direct and indirect effects of product use, and the direct and indirect effects of alternatives, such as ozone depletion potential, flammability, toxicity, corrosiveness, energy efficiency, ground level air hazards, and other environmental factors.

If any safety or health issues prevented a substitute from being used in a given product, EPA then considered that substitute to be ''unavailable'' at the time for that specific product or use. EPA noted in the initial rulemaking that as new information becomes available on the health and safety effects of possible substitutes, EPA could reevaluate determinations made regarding the nonessentiality of products.

6. Medical Devices

Section 610(e) states that ''nothing in this section shall apply to any medical devices as defined in section 601(8).'' Section 601(8) defines ''medical device'' as ''any device (as defined in the Federal Food, Drug, and Cosmetic Act (21 U.S.C. 321)), diagnostic product, drug (as defined in the Federal Food, Drug, and Cosmetic Act), and drug delivery system—(A) if such device, product, drug, or drug delivery system utilizes a Class I or Class II substance for which no safe and effective alternative has been developed and, where necessary, approved by the Commissioner of the Food and Drug Administration (FDA); and (B) if such device, product, drug, or drug delivery system, has, after notice and opportunity for public comment, been approved and determined to be essential by the Commissioner in consultation with the Administrator.''

The FDA currently is reviewing its determinations under 21 CFR 2.125(e). At this time, the FDA lists 12 medical devices for human use as essential uses of CFCs in 21 CFR 2.125(e). These devices consist of certain metered dose inhalers (MDIs), contraceptive vaginal foams, intra-rectal hydrocortisone acetate, polymyxin B sulfate-bacitracin-zinc-neomycin sulfate soluble antibiotic powder without excipient for topical use, and anesthetic drugs for topical use on accessible mucous membranes where a cannula is used for application. For additional information regarding FDA determinations and plans for potential regulatory changes, see 62 FR 10242 (March 6, 1997).

Medical products as determined by FDA and listed as essential at 21 CFR 2.125(e) are exempt from the Class I Ban at 40 CFR part 82, subpart C. This notice does not propose any changes to this current exemption. However, other medical related products not contained in the FDA's list of essential uses (21 CFR 2.125(e)), and therefore not subject to 610(e), that were considered in the initial Class I Ban rulemaking, and given exemptions, under 610(b) are reconsidered in this action. Those products are gauze bandage adhesives and adhesive removers, lubricants for pharmaceutical and tablet manufacture, and topical anesthetic and vapocoolant products.

7. Other Products

In drafting the initial rulemaking to prohibit certain products under section 610(b)(3), the Agency considered every major use sector that used class I substances including: refrigeration and air-conditioning, solvent use, fire extinguishing, foam blowing, and aerosol use. Based on that review, EPA identified three broadly defined product categories for further evaluation: aerosol products and pressurized dispensers containing CFCs or halons, plastic flexible and packaging foams, and halon fire extinguishers for residential use.

EPA believed that in each of these sectors two important conditions existed: substitutes were already available for the product or the class I substance used or contained in that product; and, either the affected industry had, for the most part, moved out of the use of class I substances or the market share of products using or containing class I substances was small and shrinking. In addition, in the case of aerosols and plastic flexible and packaging foams, section 610(d) imposed a self-effectuating ban on the sale or distribution of such products containing or produced with class II substances after January 1, 1994.

The 1993 rulemaking specifically discussed the other sectors and provided information regarding the Agency's determinations. Refrigeration and air-conditioning, including mobile air-conditioning, represented the largest total use of class I substances in the United States in 1993. At the time the initial rulemaking was promulgated, substitutes were available for some refrigeration and air-conditioning products. For example, the automotive manufacturers were in the process of switching to HFC–134a for new models rather than CFC–12 in their air-conditioning systems. However, potential substitutes for other refrigeration and air-conditioning uses were still being evaluated.

EPA did not include prohibitions on the use of class I substances in refrigeration or air-conditioning in the 1993 rulemaking because determinations regarding substitutes for all such uses were not anticipated to be available within the time-frame of that rulemaking. Accordingly, EPA could not conclude that the use of class I refrigerants in any refrigeration or air-conditioning uses were nonessential at the time of that rulemaking. Furthermore, at that time, EPA had not yet issued final regulations that specifically addressed non-automotive refrigeration and air-conditioning uses of class I substances (subsequently promulgated under CAA Section 608 and codified at 40 CFR part 82, subpart F). These regulations addressed standards for the recovery and reuse of refrigerants.

Solvent uses of class I substances, including commercial electronics de-fluxing, precision cleaning, metal cleaning and dry cleaning also represented a significant use in 1993. Industry had already identified potentially available substitutes for nearly all of the thousands of products then manufactured with class I solvents,

and many companies had already phased out the use of CFCs in certain products. EPA did not address solvent use in that rulemaking (accept where the solvent application was within an aerosol or pressurized dispenser) because the sheer number of products and the range of potential substitutes made it impossible for EPA to conclude definitively that substitutes were available for any of these specific uses, and thus that such uses were nonessential, within the short statutory time-frame for the Class I Ban rulemaking. However, EPA believed a ban on such uses would be unnecessary as most manufacturers were phasing out use as particular substitutes became available, in anticipation of the impending production phaseout.

EPA considered the use of class I substances in fire extinguishing applications in its initial review as well. Halons were widely used in fire extinguishing systems. These fire extinguishing systems include both total flooding systems (such as stationary fire suppression systems in large computer facilities) and streaming systems (such as hand-held fire extinguishers). In evaluating possible nonessential uses of halons in fire fighting, the Agency divided the fire protection sector into six broad end uses: (1) Residential/Consumer Streaming Agents, (2) Commercial/Industrial Streaming Agents, (3) Military Streaming Agents, (4) Total Flooding Agents for Occupied Areas, (5) Total Flooding Agents for Unoccupied Areas, and (6) Explosion Inertion. Substitutes for halons, whether other halocarbons or alternatives such as water, should meet four general criteria to provide a basis for determining that the use of halon in residential fire extinguishers is nonessential. They must be effective fire protection agents, they must have an acceptable environmental impact, they must have a low toxicity, and they must be relatively clean or volatile. In addition, they must be commercially available as a halon replacement in the near future. EPA concluded that while satisfactory substitutes were not yet available in most commercial and military applications within the short statutory time-frame of the rulemaking, certain substitutes were already commercially available for hand-held halon fire extinguishers in residential settings. Consequently, the Agency decided to evaluate this application more closely in order to determine whether residential fire extinguishers containing halon should be designated nonessential products, or whether the continued use of halons, despite the imposition of the excise tax and the impending production phaseout, indicated that this application did not meet the criteria for nonessentiality. Ultimately, after reviewing the issue and soliciting comment, the final rulemaking did establish a ban on the use of halon in residential streaming applications. Furthermore, the use of CFCs in fire extinguishing equipment was also restricted.

EPA considered aerosols and pressurized dispensers likely candidates for designation as nonessential products in 1993 because a great deal of information on substitutes for CFCs in these applications already existed. Research on substitutes for CFCs in aerosol applications began in the 1970s in response to the early studies on stratospheric ozone depletion and the 1978 ban on the use of CFCs as aerosol propellants. Consequently, extensive data already existed on possible substitutes for most remaining aerosol uses.

The 1978 aerosol ban prohibited the manufacture of aerosol products using CFCs as propellants. Other uses of CFCs in aerosols (such as solvents, active ingredients, or sole ingredients) were not included in the ban. In addition, certain ''essential uses'' of CFCs as aerosol propellants were exempted from the ban because no adequate substitutes were available at the time. Consequently, although the use of CFCs in aerosols was reduced dramatically by the 1978 ban, the production of a number of specific aerosol products containing CFCs were still legal including: metered dose inhalant drugs; medical solvents such as bandage adhesives and adhesive removers; skin chillers for medical purposes; aerosol tire inflators; mold release agents; lubricants, coatings, and cleaning fluids for industrial/institutional applications to electronic or electrical equipment; special-use pesticides; aerosols for the maintenance and operation of aircraft; diamond grit spray; single-ingredient dusters and freeze sprays; noise horns; mercaptan stench warning devices; pressurized drain openers; aerosol polyurethane foam dispensers; and whipped topping stabilizers. In 1993, EPA concluded that satisfactory substitutes were available for most uses of CFCs in aerosols and pressurized dispensers. As a result, the Agency banned all uses of CFCs in aerosols and pressurized dispensers except for certain products, such as medical devices, that it specifically exempted. EPA further concluded that the implementation of the production phaseout of CFCs on January 1, 1996, would serve to eliminate the continued use of CFCs in all but the most essential applications, such as the permitted production for metered dose inhalant drugs.

8. Reconsidering Nonessential Determinations

New and compelling information has been gathered recently by EPA that indicates that some sectors continue to use class I substances in products where the use of the substance today should be considered a ''nonessential use of class I substances in a product.'' Since the promulgation of the initial regulations under Section 610, the SNAP program has been established and now provides information regarding acceptable substitutes for various applications. While the SNAP program does not consider the efficacy of the substitute substance as a replacement for the ozone-depleting substances, for most applications there are sources of information regarding the effectiveness of the substitutes, such as laboratory testing and information provided by major users and trade associations. For example, many substitutes have been listed by SNAP as acceptable for various refrigeration applications. Domestically, newly manufactured refrigerators for residential use are employing these available substitutes. Therefore, it is reasonable for the Agency at this time to reconsider applying the 610 Class I ban to include refrigeration applications by determining if the use of a class I substance in refrigeration applications now meets the definition of nonessentiality, as described in this notice.

Today's action proposes to amend the class I ban to meet the Agency's obligations to eliminate the nonessential uses of class I substances. Specifically, EPA has determined that it is appropriate to reconsider the determinations for the air-conditioning and refrigeration, foam-blowing, aerosols, and pressurized dispensers product categories. Today's action proposes amending the class I ban to include additional nonessential uses of CFCs for these end-use applications.

B. Class II Ban

On December 30, 1993, EPA published a final rulemaking (58 FR 69637) addressing issues related to the statutory prohibition against the sale or distribution, or offer for sale or distribution in interstate commerce of nonessential products containing or manufactured with a class II substance, imposed by Section 610(d) of the Act. Section 610(d)(1) states that after January 1, 1994, ''it shall be unlawful for any person to sell or distribute, or

offer for sale or distribution, in interstate commerce—(A) any aerosol product or other pressurized dispenser which contains a class II substance; or (B) any plastic foam product which contains, or is manufactured with, a class II substance.'' Section 610(d)(2) authorizes EPA to grant certain exceptions and Section 610(d)(3) creates exclusions from the Class II Ban in certain circumstances.

Section 610(d)(2) authorizes the Administrator to grant exceptions from the Class II Ban for aerosols and other pressurized dispensers where ''the use of the aerosol product or pressurized dispenser is determined by the Administrator to be essential as a result of flammability or worker safety concerns,'' and where ''the only available alternative to use of a class II substance is use of a class I substance which legally could be substituted for such class II substance.''

Section 610(d)(3) states that the ban of class II substances in plastic foam products shall not apply to ''foam insulation products'' or ''an integral skin, rigid, or semi-rigid foam utilized to provide for motor vehicle safety in accordance with Federal Motor Vehicle Safety Standards where no adequate substitute substance (other than a class I or class II substance) is practicable for effectively meeting such standards.'' Unlike the Class I Ban, the Class II Ban was self-executing. Section 610(d) bans the sale of the specified class II products by its own terms, without any reference to required EPA regulations. However, EPA did issue regulations implementing the Class II Ban in order to better define the products banned under Section 610(d) and to grant authorized exceptions under Section 610(d)(2). Section 301(a) of the Act gives EPA the authority to promulgate such regulations as are necessary to carry out its functions under the Act, and EPA determined that it was necessary to issue the Class II Ban regulations for those purposes.

1. Reconsideration

Since the issuance of the final rule providing exemptions from the statutory Class II Ban, EPA amended the final rule with regards to fire suppression based on compelling information that the Agency received. That amended regulation was issued in the **Federal Register** on December 4, 1996 (61 FR 64424) and subsequently codified at 40 CFR Part 82, subpart C.

EPA has received information indicating that it may be appropriate to reconsider the continued relevance of the current list of exemptions for specific aerosol products and pressurized dispensers. The Agency is aware that since the issuance of that initial final rulemaking, there has been further substitution away from ozone-depleting substances for a variety of aerosol products and pressurized dispensers.

2. Determinations Under Section 610(d)

The statutory criteria for providing an exemption from the Class II Ban are explicit. For any potential exemption the use of the aerosol product or pressurized dispenser must be found to be essential based on flammability or worker safety concerns and EPA must find that the only available alternative to use of a class II substance is use of a class I substance which could legally be substituted for such class II substance.

The initial final rulemaking regarding the Class II Ban provided exemptions for:

- Lubricants, coatings, or cleaning fluids for aircraft maintenance containing HCFCs as solvents;
- Lubricants, coatings, or cleaning fluids for electrical, electronic or photographic equipment containing HCFCs as solvents;
- Aircraft pesticides; • Mold release agents containing HCFCs as solvents;
- Mold release agents containing HCFC–22 as a propellant, for use where no alternative, including an alternative formulation, is available and where the seller must notify purchaser about the restriction;
- Spinnerette lubricant/cleaning sprays containing HCFCs as solvents and/or propellants;
- Document preservation sprays containing HCFCs as solvents;
- Document preservation sprays containing HCFCs as propellants, for use on thick books, books with coated or dense paper, and tightly bound documents, only;
- Portable fire extinguishing equipment containing HCFCs as fire extinguishants, for use in non-residential applications only; and
- Wasp and hornet sprays, for use near high-tension power lines only and where the seller must notify purchaser about restrictions.

3. Future Notice of Proposed Rulemaking

EPA is currently reviewing information concerning the above aerosol products and pressurized dispensers given exemptions in the December 1993 rulemaking. In particular, the Agency is evaluating whether there are technologically available substitutes for the HCFCs used in these products. Since the implementation of the Class II Ban on January 1, 1994, progress has been made to further identify substitutes for various applications. In addition, as stated above, the SNAP program has been established and provides lists of acceptable substitutes for various applications, including applications affected by the Class II Ban. When EPA completes its evaluation of the existing exemptions for HCFCs in pressurized dispensers and aerosol products, the Agency plans to issue a notice of proposed rulemaking and request comments, should the Agency determine that any rule revisions are appropriate.

III. Today's Action

Today, EPA is proposing to revise the Class I Ban to include additional products and to eliminate exemptions. EPA is proposing to expand the scope of the Class I Ban to include additional categories of products.

A. Foam Products

Today, EPA is proposing to ban the sale and distribution and offer of sale or distribution in interstate commerce of all foam products (both insulating and non-insulating) that release class I substances into the environment (including any release during manufacture, use, storage, or disposal). EPA believes there are acceptable substitutes available for replacing any continued use of class I substances as blowing agents for foam products. For example, the SNAP program lists exemptions for various foam applications by providing lists that are specific to the type of foam for which the particular substitute has been listed as acceptable. These categories are rigid polyurethane used in appliances and commercial applications, flexible polyurethane, integral skin polyurethane, polyurethane extruded sheet foam, polyolefin, rigid polyurethane slabstock, polystyrene, extruded boardstock & billet, rigid polyurethane and polyisocyanurate laminated boardstock, and phenolic insulation board and bunstock. The SNAP program does not consider the efficacy of the substitute substance as a replacement for the ozone-depleting substances in each application. However, given the phaseout of production for the class I substances previously used in these products, and the information gathered through trade associations, newsletters, media articles, technical publications, and United Nations Environmental Programme (UNEP) Technical Options Committee reports, it appears that for all foam products, there are currently sufficient

technically available substitutes for the use of a class I substance. EPA requests comments on revising the Class I Ban to ban the sale and distribution or offer of sale and distribution in interstate commerce of *any* foam plastic product or plastic foam product that releases class I substances into the environment (including any release during manufacture, use, storage, or disposal). EPA will consider any specific data indicating that substitutes are not available for certain foam products.

B. Aerosol Products and Pressurized Dispensers

As stated above, EPA initially provided exemptions for a narrow list of aerosol products and pressurized dispensers that release class I substances into the environment. EPA today, is proposing to eliminate exemptions for: gauze bandage adhesives & adhesive removers, topical anesthetic and vapocoolant products, lubricants for pharmaceutical tablet manufacture, containers of CFCs used as halogen ion sources in plasma etching, and red pepper bear repellent sprays containing CFC–113 as a solvent. EPA believes that substitutes are available for such uses of class I products and therefore that such use is no longer essential. EPA is not proposing any changes to the exemption for medical devices that are determined to be essential by the Food and Drug Administration and are listed at 21 CFR 2.125(e). Products such as metered dose inhalers (MDIs) are listed at 21 CFR 2.125(e). The Class I Ban will continue to provide an exemption for the sale and distribution or offer of sale or distribution in interstate commerce of MDIs that release class I substances into the environment, as well as any other essential medical device listed at 21 CFR 2.125(e).

Given the statutory links established between the Class I and Class II Bans for aerosol products and pressurized dispensers, namely the criterion in 610(d) that states that the alternative to the use of a class II substance is the legal use of a class I substance, at this time EPA is not proposing to eliminate exemptions for aerosol products or pressurized dispensers from the Class I Ban that are also exempted from the Class II Ban. However, if and when EPA subsequently issues a proposed rulemaking reconsidering those exemptions from the Class II Ban, that notice will also include the reconsideration for the remaining aerosol products and pressurized dispensers under the Class I Ban as well.

EPA requests comments on the proposed changes to the list of exemptions for aerosol and pressurized dispensers that release class I substances into the environment, and specifically any data indicating that such uses are still essential.

C. Air-Conditioning and Refrigeration Appliances

The initial rulemaking implementing the Class I Ban specifically considered refrigeration and air-conditioning. As noted above, at the time the initial rulemaking was promulgated, substitutes were available for some refrigeration and air-conditioning products; however, potential substitutes for other refrigeration and air-conditioning applications were still under development and evaluation. Thus EPA did not include prohibitions on the use of class I substances in refrigeration or air-conditioning in that rulemaking.

Currently there are substitutes identified for a variety of refrigeration and air-conditioning applications. While substitutes continue to be developed and evaluated for these applications, the Agency is confident that there are sufficient technologically available substitutes for the use of class I substances in all refrigeration and air-conditioning applications as documented in the docket for this rulemaking. The SNAP program also provides lists of acceptable substitutes for various applications.

Since the production and importation of CFCs ceased January 1, 1996, EPA believes it is highly unlikely that there would be continued domestically manufactured air-conditioning and refrigeration appliances with CFCs. EPA has raised this question at industry stakeholder meetings and other forums with representatives from the air-conditioning and refrigeration manufacturing community, as well as with the refrigerant suppliers for these manufacturers. EPA recognizes that there may be a limited number of products manufactured abroad and imported into the United States as well as some potential domestic manufacturing of refrigeration and air-conditioning products containing class I substances that EPA is not aware of; however, given the criteria for nonessentiality discussed above, EPA believes that air-conditioning and refrigeration appliances that contain CFCs meet the criteria for nonessential uses of a class I substance. Therefore, it is reasonable for the Agency to consider broadening the applicability of the Class I Ban to include refrigeration applications. EPA is today proposing to amend § 82.66 to add a provision banning the sale and distribution or offer for sale or distribution of air-conditioning and/or refrigeration appliances that contain class I substances.

EPA heard from two manufacturers regarding potential economic impacts of this proposal. A manufacturer has stated that well over 90% of the compact refrigerators are sold by large retailers and very small quantities are sold by small dealers. Another manufacturer reported that several foreign manufacturers have exported compact refrigerators containing CFCs and non-CFC containing compact refrigerators into the U.S. during 1998. Since they are able to produce both types of refrigerators, the use of CFCs should be considered a ''nonessential use of class I substances in a product.'' One manufacturer believed that the differential in manufacturing costs is between $2.00 and $3.00 per unit, which might translate into a $5.00 price differential if the costs are passed on to the consumer. EPA requests comments regarding the costs and sales of these refrigerators.

EPA would like to clarify that consistent with all other products subject to the nonessential products bans, this proposed addition of air-conditioning and refrigeration appliances covers the sale and distribution of new products, not used products. Furthermore, this proposal would not affect the servicing of existing products with class I refrigerants.

EPA requests comments on expanding the Class I Ban to include air-conditioning and refrigeration appliances. In particular, EPA requests comments regarding whether there are sufficient technologically available substitutes for the use of class I substances in all new air-conditioning and refrigeration appliances.

IV. Proposed Effective Dates and Grandfathering

EPA is proposing that the effective date for the proposed changes to this rulemaking 60 days from the date of publication of a final rule in the **Federal Register**. Given the potential harm releases of class I substances represent and given that most products affected by these proposed changes to the ban no longer use class I substances, EPA believes this is an appropriate effective date. The Agency also considered the potential for a longer implementation date for these proposed regulatory changes, such as 6 months from the date of publication of the final rule in the **Federal Register**; however, as stated

above, this additional time did not seem necessary and thus is not the Agency's lead option. However, EPA requests comments and rationale regarding both the proposed 60-day effective date and alternative effective dates for the proposed changes discussed in this notice.

V. Summary of Supporting Analysis

A. Executive Order 12866

Under Executive Order 12866 (58 FR 51735, October 4, 1993), the Agency must determine whether this proposed regulatory action is ''significant'' and therefore subject to OMB review and the requirements of the Executive Order. The Order defines ''significant regulatory action'' as one that is likely to result in a rule that may:

(1) Have an annual effect on the economy of $100 million or more, or adversely affect in a material way the economy, a sector of the economy, productivity, competition, jobs, the environment, public health or safety, or State, local, or tribal governments or communities;

(2) Create a serious inconsistency or otherwise interfere with an action taken or planned by another agency;

(3) Materially alter the budgetary impact of entitlement, grants, user fees, or loan programs or the rights and obligations of recipients thereof; or

(4) Raise novel legal or policy issues arising out of legal mandates, the President's priorities, or the principles set forth in the Executive Order.

It has been determined by OMB and EPA that this action is not a ''significant regulatory action'' under the terms of Executive Order 12866 and is therefore not subject to OMB review under the Executive Order.

B. Regulatory Flexibility

EPA has determined that it is not necessary to prepare a regulatory flexibility analysis for this proposed rule. EPA believes that this proposed rule will not have a significant economic impact on a substantial number of small entities. EPA has received a letter from a manufacturer citing market research from import reports by the Department of Commerce. This manufacturer stated that well over 90% of the compact refrigerators are sold by large retailers and very small quantities are sold by small dealers. Another manufacturer reported that several foreign manufacturers have exported compact refrigerators containing CFCs and non-CFC containing compact refrigerators into the U.S. during 1998. Since they are able to produce both types of refrigerators, the use of CFCs should be considered a ''nonessential use of class I substances in a product.'' Our assessment indicates that replacing the CFC portion of the import market with more non-CFC refrigerators is economically and technically feasible. One manufacturer believes that the differential in manufacturing costs is between $2.00 and $3.00 per unit, which might translate into a $5.00 price differential if the costs are passed on to the consumer.

In light of the ready supply, coupled with a low price differential, EPA certifies that very little if any negative impact would be felt by the small distributors.

C. Unfunded Mandates Act

Section 202 of the Unfunded Mandates Reform Act of 1995 (''Unfunded Mandates Act'') (signed into law on March 22, 1995) requires that the Agency prepare a budgetary impact statement before promulgating a rule that includes a Federal mandate that may result in expenditure by State, local, and tribal governments, in aggregate, or by the private sector, of $100 million or more in any one year. Section 203 requires the Agency to establish a plan for obtaining input from and informing, educating, and advising any small governments that may be significantly or uniquely affected by the rule. Section 204 requires the Agency to develop a process to allow elected state, local, and tribal government officials to provide input in the development of any action containing a significant Federal intergovernmental mandate. Under section 205 of the Unfunded Mandates Act, the Agency must identify and consider a reasonable number of regulatory alternatives before promulgating a rule for which a budgetary impact statement must be prepared. The Agency must select from those alternatives the least costly, most cost-effective, or least burdensome alternative that achieves the objectives of the rule, unless the Agency explains why this alternative is not selected or the selection of this alternative is inconsistent with law.

Because this proposed rule is estimated to result in the expenditure by State, local, and tribal governments or the private sector of less than $100 million in any one year, the Agency has not prepared a budgetary impact statement or specifically addressed the selection of the least costly, most cost-effective, or least burdensome alternative. Because small governments will not be significantly or uniquely affected by this proposed rule, the Agency is not required to develop a plan with regard to small governments. Finally, because this NPRM does not contain a significant intergovernmental mandate, the Agency is not required to develop a process to obtain input from elected state, local, and tribal officials.

D. Paperwork Reduction Act

This action requires no information collection subject to the Paperwork Reduction Act, 44 U.S.C. 3501 *et seq.*, and therefore no information collection request will be submitted to OMB for review.

E. Executive Order 12875: Enhancing the Intergovernmental Partnership

Under Executive Order 12875, EPA may not issue a regulation that is not required by statute and that creates a mandate upon a State, local or tribal government, unless the Federal government provides the funds necessary to pay the direct compliance costs incurred by those governments, or EPA consults with those governments. If EPA complies by consulting, Executive Order 12875 requires EPA to provide to the Office of Management and Budget a description of the extent of EPA's prior consultation with representatives of affected State, local and tribal governments, the nature of their concerns, copies of any written communications from the governments, and a statement supporting the need to issue the regulation. In addition, Executive Order 12875 requires EPA to develop an effective process permitting elected officials and other representatives of State, local and tribal governments ''to provide meaningful and timely input in the development of regulatory proposals containing significant unfunded mandates.''

Today's rule does not create a mandate on State, local or tribal governments. The rule does not impose any enforceable duties on these entities. Accordingly, the requirements of section 1(a) of Executive Order 12875 do not apply to this rule.

F. National Technology Transfer and Advancement Act

The National Technology Transfer and Advancement Act of 1995 (NTTAA), section 12(d), Public Law 104–113, requires federal agencies and departments to use technical standards that are developed or adopted by voluntary consensus standards bodies, using such technical standards as a means to carry out policy objectives or activities determined by the agencies and departments. If use of such technical standards is inconsistent with applicable law or otherwise impractical, a federal agency or department may

elect to use technical standards that are not developed or adopted by voluntary consensus standards bodies if the head of the agency or department transmits to the Office of Management and Budget an explanation of the reasons for using such standards.

This proposed rule does not mandate the use of any technical standards; accordingly, the NTTAA does not apply to this rule.

G. Applicability of Executive Order 13045

This proposed rule is not subject to E.O. 13045, entitled ''Protection of Children from Environmental Health Risks and Safety Risks'' (62 FR 19885, April 23, 1997), because it is not an economically significant regulatory action as defined in E.O. 12866 and because it does not involve decisions on environmental health risks or safety risks that may disproportionately affect children.

H. Executive Order 13084: Consultation and Coordination With Indian Tribal Governments

Under Executive Order 13084, EPA may not issue a regulation that is not required by statute, that significantly or uniquely affects the communities of Indian tribal governments, and that imposes substantial direct compliance costs on those communities, unless the Federal government provides the funds necessary to pay the direct compliance costs incurred by the tribal governments, or EPA consults with those governments. If EPA complies by consulting, Executive Order 13084 requires EPA to provide to the Office of Management and Budget, in a separately identified section of the preamble to the rule, a description of the extent of EPA's prior consultation with representatives of affected tribal governments, a summary of the nature of their concerns, and a statement supporting the need to issue the regulation. In addition, Executive Order 13084 requires EPA to develop an effective process permitting elected officials and other representatives of Indian tribal governments ''to provide meaningful and timely input in the development of regulatory policies on matters that significantly or uniquely affect their communities.''

Today's rule does not significantly or uniquely affect the communities of Indian tribal governments, because this regulation applies directly to facilities that use these substances and not to governmental entities. Accordingly, the requirements of section 3(b) of Executive Order 13084 do not apply to this rule.

List of Subjects in 40 CFR Part 82

Administrative practice and procedure, Air pollution control, Chemicals, Chlorofluorocarbons, Exports, Hydrochlorofluorocarbons, Imports, Interstate commerce.

Dated: June 4, 1999.

Carol M. Browner,

Administrator.

For the reasons set out in the preamble title 40, chapter I of the Code of Federal Regulations, is proposed to be amended to read as follows:

PART 82—PROTECTION OF STRATOSPHERIC OZONE

1. The authority citation for Part 82 continues to read as follows:

Authority: 42 U.S.C. 7414, 7601, 7671–7671q.

Subpart C—[Amended]

2. Section 82.66 is amened by removing paragraphs (d)(2)(ii), (iii), (iv),(ix), and (xi); by redesignating (d)(2)(v) through (d)(2)(viii) as (d)(2)(ii) through (d)(2)(v); by redesignating (d)(2)(x) as (d)(2)(vi); by revising paragraph (c); and by adding paragraph (e) to read as follows:

§ 82.66 Nonessential Class I Products and Exceptions.

* * * * *

(c) Any plastic foam product which is manufactured with or contains a class I substance.

* * * * *

(e) Any air-conditioning or refrigeration appliance which contains a class I substance used as a refrigerant.

[FR Doc. 99–15014 Filed 6–11–99; 8:45 am]

BILLING CODE 6560–50–P

FEDERAL COMMUNICATIONS COMMISSION

47 CFR Parts 36, 54, and 69

[CC Docket Nos. 96–45 and 97–160; FCC 99–120]

Federal-State Joint Board on Universal Service; Forward-Looking Mechanism for High Cost Support for Non-Rural LECs

AGENCY: Federal Communications Commission.

ACTION: Notice of proposed rulemaking.

SUMMARY: This document concerning the Federal-State Joint Board on Universal Service proposes input values for the forward-looking mechanisms cost model for determining support for non-rural high-cost carriers. Comments are sought to supplement the record so that the Commission can select final input values.

DATES: Comments are due on or before July 2, 1999 and reply comments are due on or before July 16, 1999.

Written comments by the public on the modified information collections are due on or before July 2, 1999 and reply comments are due on or before July 16, 1999. Written comments must be submitted by the Office of Management and Budget (OMB) on the modified information collections on or before August 13, 1999.

ADDRESSES: Parties who choose to file by paper must file an original and four copies of each filing. All filings must be sent to the Commission's Secretary, Magalie Roman Salas, Office of the Secretary, Federal Communications Commission, 445 Twelfth Street, S.W., TW–A325, Washington, D.C. 20554. In addition to filing comments with the Secretary, a copy of any comments on the information collections contained herein should be submitted to Judy Boley, Federal Communications Commission, Room 1–C804, 445 Twelfth Street, S.W., Washington, DC 20554, or via the Internet to jboley@fcc.gov, and to Timothy Fain, OMB Desk Officer, 10236 NEOB, 725__17th Street, N.W., Washington, DC 20503 or via the Internet to fain__t@al.eop.gov.

FOR FURTHER INFORMATION CONTACT: Richard Smith, Attorney, Common Carrier Bureau, Accounting Policy Division, (202) 418–7400. For additional information concerning the information collections contained in this Further Notice of Proposed Rulemaking contact Judy Boley at 202–418–0214, or via the Internet at jboley@fcc.gov.

SUPPLEMENTARY INFORMATION: This is a summary of the Commission's document released on May 28, 1999. The full text of this document is available for public inspection during regular business hours in the FCC Reference Center, Room CY–A257, 445 Twelfth Street, S.W., Washington, D.C. 20554.

Initial Paperwork Reduction Act Analysis

1. This Further Notice of Proposed Rulemaking contains a modified information collection. The Commission, as part of its continuing effort to reduce paperwork burdens, invites the general public and the Office of Management and Budget (OMB) to comment on the information collections contained in this Further Notice of Proposed Rulemaking, as required by

the Paperwork Reduction Act of 1995, Public Law 104–13. Public and agency comments are due at the same time as other comments on this Further Notice of Proposed Rulemaking; OMB notification of action is due August 13, 1999. Comments should address: (a) whether the proposed collection of information is necessary for the proper performance of the functions of the Commission, including whether the information shall have practical utility; (b) the accuracy of the Commission's burden estimates; (c) ways to enhance the quality, utility, and clarity of the information collected; and (d) ways to minimize the burden of the collection of information on the respondents, including the use of automated collection techniques or other form of information technology.

OMB Approval Number: 3060–0793.

Title: Procedures for States Regarding Lifeline Consents. Adoption of Intrastate Discount Matrix, and Designation of Eligible Telecommunications Carriers.

Form No.: N/A.

Type of Review: Revision of a currently approved collection.

Respondents: Business or other for profit.

	Number of respondents	Estimate time per response (hours)	Total annual burden (hours)
Self-Certification as a rural company for companies serving less than 100,000 access lines	5	1	5
Self-Certification as a rural company for companies serving more than 100,000 access lines	20	1	20

Total Annual Burden: 25 hours.

Estimated costs per respondent: $0.

Needs and Uses: All the requirements contained herein are necessary to implement the congressional mandate for universal service. These reporting requirements are necessary to verify that particular carriers and other respondents are eligible to receive universal service support. In this document the Commission is proposing to change the way in which LECs file rural certification letters. The Commission proposes that once it has clarified the meaning of ''local exchange operating entity'' and ''communities of more than 50,000'' in section 153(37), it should require carriers with more than 100,000 access lines that seek rural status to file certifications for the period beginning January 1, 2000, consistent with the Commission's interpretation of the ''rural telephone company'' definition.

I. Introduction

2. In the Telecommunications Act of 1996 (1996 Act), Congress directed this Commission and the states to take the steps necessary to establish support mechanisms to ensure the delivery of affordable telecommunications service to all Americans. In response to this directive, the Commission has taken action to put in place a universal service support system that will be sustainable in an increasingly competitive marketplace. *In the Universal Service Order,* 62 FR 32862 (June 17, 1997), the Commission adopted a plan for universal service support for rural, insular, and high cost areas to replace longstanding federal subsidies to incumbent local telephone companies with explicit, competitively neutral federal universal service support mechanisms. The Commission adopted the recommendation of the Federal-State Joint Board on Universal Service (Joint Board) that an eligible carrier's level of universal service support should be based upon the forward-looking economic cost of constructing and operating the network facilities and functions used to provide the services supported by the federal universal service support mechanisms.

3. Our plan to adopt a mechanism to estimate forward-looking cost has proceeded in two stages. On October 28, 1998, with the release of the *Platform Order,* 63 FR 63993 (November 18, 1998), the Commission completed the first stage of this proceeding: the selection of the model platform. The platform encompasses the aspects of the model that are essentially fixed, primarily the assumptions about the design of the network and network engineering. In this document, we move toward completion of the second stage of this proceeding, by proposing input values for the model, such as the cost of cables, switches, and other network components, in addition to various capital cost parameters. For the most important inputs, we provide a description of the methodology we have used to arrive at the proposed values. In addition, we seek to supplement the record regarding certain inputs to the model.

4. The forward-looking cost of providing supported services estimated by the model will be used to determine high cost support for non-rural carriers beginning January 1, 2000. The Commission is adopting a companion Order and Further Notice that establishes the framework for determining federal high cost support levels and seeks comment on the details of that mechanism.

II. Estimating Forward-Looking Economic Cost

A. Designing a Forward-Looking Wireline Local Telephone Network

5. To understand the assumptions made in the mechanism, it is necessary to understand the layout of the current wireline local telephone network. In general, a telephone network must allow any customer to connect to any other customer. In order to accomplish this, a telephone network must connect customer premises to a switching facility, ensure that adequate capacity exists in that switching facility to process all customers' calls that are expected to be made at peak periods, and then interconnect that switching facility with other switching facilities to route calls to their destinations. A *wire center* is the location of a switching facility. The wire center boundaries define the area in which all customers are connected to a given wire center. The *Universal Service Order* required the models to use existing incumbent LEC wire center locations in estimating forward-looking cost.

6. Within the boundaries of each wire center, the wires and other equipment that connect the central office to the customers' premises are known as *outside plant.* Outside plant can consist of either copper cable or a combination of optical fiber and copper cable, as well as associated electronic equipment. Copper cable generally carries an analog signal that is compatible with most customers' telephone equipment, but thicker, more expensive cables or loading coils must be used to carry signals over greater distances. Optical fiber cable carries a digital signal that is incompatible with most customers' telephone equipment, but the quality of a signal carried on optical fiber cable is superior at greater distances when compared to a signal carried on copper

wire. Generally, when a neighborhood is located too far from the wire center to be served with copper cables alone, an optical fiber cable will be deployed to a point within the neighborhood, where a piece of equipment will be placed that converts the digital light signal carried on optical fiber cable to an analog, electrical signal that is compatible with customers' telephones. This equipment is known as a digital loop carrier remote terminal, or DLC. From the DLC, copper cables of varying gauge extend to all of the customer premises in the neighborhood. Where the neighborhood is close enough to the wire center to serve entirely on copper cables, a copper trunk connects the wire center to a central point in the serving area, called the serving area interface (SAI), and copper cables will then connect the SAI to the customers in the serving area. The portion of the loop plant that connects the central office with the SAI or DLC is known as the *feeder plant*, and the portion that runs from the DLC or SAI throughout the neighborhood is known as the *distribution plant*.

7. The model's estimate of the cost of serving the customers located within a given wire center's boundaries includes the calculation of switch size, the lengths, gauge, and number of copper and fiber cables, and the number of DLCs required. These factors depend, in turn, on how many customers the wire center serves, where the customers are located within the wire center boundaries, and how they are distributed within neighborhoods. Particularly in rural areas, some customers may not be located in neighborhoods at all but, instead, may be scattered throughout outlying areas. In general, the model divides the area served by the wire center into smaller areas known as *serving areas*. For serving areas sufficiently close to the wire center, copper feeder cable extends from the wire center to a SAI where it is cross-connected to copper distribution cables. If the feeder is fiber, it extends to a DLC terminal in the serving area, which converts optical digital signals to analog signals. Individual circuits from the DLC are cross-connected to copper distribution cables at the adjacent SAI.

8. The model assumes that wire centers are interconnected with one another using optical fiber networks known as Synchronous Optical Network (SONET) rings. The infrastructure to interconnect the wire centers is known as the *interoffice* network, and the carriage of traffic among wire centers is known as *transport*. In cases where a number of wire centers with relatively few people within their boundaries are located in close proximity to one another, it may be more economical to use the processor capacity of a single switch to supervise the calls of the customers in the boundaries of all the wire centers. In that case, a full-capacity switch (known as a *host*) is placed in one of the wire centers and less expensive, more limited-capacity switches (known as *remotes*) are placed in the other wire centers. The remotes are then connected to the host with interoffice facilities. Switches that are located in wire centers with enough customers within their boundaries to merit their own full-capacity switches and that do not serve as hosts to any other wire centers are called stand-alone switches.

9. There are also a number of expenses and general support facilities (GSF) costs associated with the design of a forward-looking wireline telephone network. GSF costs include the investment related to vehicles, land, buildings, and general purpose computers. Expenses include: plant specific expenses, such as maintenance of facilities and equipment expenses; plant non-specific expenses, such as engineering, network operations, and power expenses; customer service expenses, such as marketing, billing, and directory listing expenses; and corporate operations expenses, such as administration, human resources, legal, and accounting expenses.

B. Synthesis Model

10. The ''synthesis'' model adopted in the *Platform Order* allows the user to estimate the cost of building a telephone network to serve subscribers in their actual geographic locations, to the extent these locations are known. To the extent that the actual geographic locations of customers are not available, the Commission determined that the synthesis model should assume that customers are located near roads.

11. Once the customer locations have been determined, the model employs a clustering algorithm to group customers into serving areas in an efficient manner that takes into consideration relevant engineering guidelines. After identifying efficient serving areas, the model designs outside plant to the customer locations. In doing so, the model employs a number of cost minimization principles designed to determine the most cost-effective technology to be used under a variety of circumstances, such as varying terrain and density.

12. The Commission concluded that the federal universal service mechanism should incorporate, with certain modifications, the HAI 5.0a switching and interoffice facilities module to estimate the cost of switching and interoffice transport. The Commission noted that it would consider adopting the LERG at the inputs stage of this proceeding to determine the deployment of host and remote switches. In addition, the Commission adopted the HAI platform module for calculating expenses and capital costs, such as depreciation.

13. The Commission noted that technical improvements to the cost model will continue, both before implementation of the model for non-rural carriers and on an ongoing basis, as necessary. The Commission therefore delegated to the Bureau the authority to make changes or direct that changes be made to the model platform as necessary and appropriate to ensure that the platform of the federal mechanism operates as described in the *Platform Order*. As contemplated in the *Platform Order*, Commission staff and interested parties have continued to review the model platform to ensure that it operates as intended. As a result, some refinements have been made to the model platform adopted in the *Platform Order*.

C. Selecting Forward-Looking Input Values

14. In the *Universal Service Order*, the Commission adopted ten criteria to be used in determining the forward-looking economic cost of providing universal service in high cost areas. These criteria provide specific guidance for our selection of input values for use in the synthesis model. Rather than reflecting existing incumbent LEC facilities, the technology assumed in the model ''must be the least-cost, most-efficient, and reasonable technology for providing the supported services that is currently being deployed.'' As noted, existing LEC plant does not necessarily, or even likely, reflect forward-looking technology or design choices. Similarly, the input values we tentatively select in this Notice are not intended to replicate any particular company's embedded or book costs. Criterion three directs that ''costs must not be the embedded cost of the facilities, functions, or elements.'' Rather, the model ''must be based upon an examination of the current cost of purchasing facilities and equipment.''

15. As discussed, we generally have proposed using nationwide, rather than company-specific input values in the federal mechanism. In many cases, the only data for various inputs on the record in this proceeding are embedded cost, company-specific data. We have used various techniques to convert these data to forward-looking values. For example, we propose modifying the

switching data to adjust for the effects of inflation and the cost changes unique to the purchase and installation of digital switches. We propose nationwide averages, rather than company-specific values, to mitigate the rewards to less efficient companies.

16. Although the BCPM sponsors have provided nationwide default values, they and other LECs generally advocate company-specific input values. For purposes of determining federal universal service support amounts, we believe that nationwide default values generally are more appropriate than company-specific values. Under the new mechanism, support is based on the estimated costs that an efficient carrier would incur to provide the supported services, rather than on the specific carrier's book costs. There may be some categories of inputs, however, where company-specific or state specific input values might be appropriate for use in the federal mechanism. We seek comment on specific alternatives to nationwide values for certain input values, as discussed. We make no finding with respect to whether nationwide values would be appropriate for purposes other than determining federal universal service support.

III. Determining Customer Locations

A. Issues for Comment

1. Geocode Data

17. While we affirm our conclusion in the *Platform Order* that geocode data should be used to locate customers in the federal mechanism, we tentatively conclude that at this time we cannot adopt any particular source of geocode data because interested parties have not had adequate access or time to review such data. We tentatively conclude that a road surrogate algorithm will be used to locate customers in the federal mechanism until a source of geocode data is selected by the Commission. We reiterate our expectation, however, that we will identify and select a source of accurate and verifiable geocode data in the future for use in the federal mechanism.

18. In the *Platform Order,* we concluded that a model is most likely to select the least-cost, most-efficient outside plant design if it uses the most accurate data for locating customers within wire centers, and that the most accurate data for locating customers within wire centers are precise latitude and longitude coordinates for those customers' locations. We noted that commenters generally support the use of accurate geocode data in the federal mechanism where available. We further noted that the only geocode data in the record were those prepared for HAI by PNR Associates (PNR), but that ''our conclusion that the model should use geocode data to the extent that they are available is not a determination of the accuracy or reliability of any particular source of the data.'' Although commenters support the use of accurate geocode data, several commenters question whether the PNR geocode data are adequately available for review by interested parties.

19. In the *Universal Service Order,* the Commission required that the ''model and all underlying data, formulae, computations, and software associated with the model must be available to all interested parties for review and comment.'' In an effort to comply with this requirement, the Commission has made significant efforts to encourage parties to submit geocode data on the record in this proceeding. PNR took initial steps to comply with this requirement in December 1998 by making available the ''BIN'' files derived from the geocoded points to interested parties pursuant to the *Protective Order,* 63 FR 42753 (August 11, 1998). In addition, PNR has continued to provide access to the underlying geocode data at its facility in Pennsylvania. Several commenters, in petitions for reconsideration of the *Platform Order,* have argued that the availability of the BIN data alone is not sufficient to comply with the requirements of criterion eight, particularly in light of the expense and conditions imposed by PNR in obtaining access to the geocode point data.

20. We tentatively conclude that interested parties have not had an adequate opportunity to review and comment on the accuracy of the PNR geocode data. We note that a nationwide customer location database will, by necessity, be voluminous, relying on a variety of underlying data sources. In order to comply with criterion eight, all underlying data must be reasonably available to interested parties for review. In light of the concerns expressed by several commenters relating to the conditions and expense in obtaining data from PNR, we find that no source of geocode data has been made adequately available for review. We anticipate that a source of accurate and verifiable geocode data can be selected for use in the federal mechanism in the future and we encourage parties to make continued efforts to ensure that all underlying geocode data are available for review. For example, we note that PNR has contacted its data vendors for the purpose of making additional underlying data more freely available to parties in this proceeding. As noted in the *Platform Order,* we recognize that more comprehensive geocode data are likely to be available in the future and encourage parties to continue development of a data source that complies with the criteria outlined in the *Universal Service Order* for use in the federal mechanism. We therefore seek further comment on a source of geocode customer locations that will comply with the Commission's criteria for use in the federal mechanism. In addition, we seek comment on the availability for review of the PNR geocode data, including any further measures necessary to ensure that the PNR geocode data are sufficiently available for review by the public.

2. Road Surrogate Customer Locations

21. We tentatively conclude that the road surrogating algorithm proposed by PNR should be used to develop road surrogate customer locations for the federal universal service mechanism. In the *Platform Order,* we concluded that, in the absence of actual geocode customer location data, BCPM's rationale of associating road networks and customer locations provides the most reasonable approach for determining customer locations. As anticipated in the *Platform Order,* once a source of geocode data has been selected, the road surrogate customer locations will be used only in the absence of geocode customer location data.

22. As noted in the *Platform Order,* ''associating customers with the distribution of roads is more likely to correlate to actual customer locations than uniformly distributing customers throughout the Census Block, as HCPM proposes, or uniformly distributing customers along the Census Block boundary, as HAI proposes.'' We therefore concluded in the *Platform Order* that the selection of a precise algorithm for placing road surrogates should be conducted in the inputs stage of this proceeding.

23. Currently, there are two road surrogating algorithms on the record in this proceeding—those proposed by PNR and Stopwatch Maps. On March 2, 1998, the HAI proponents provided a description of the road surrogate methodology developed by PNR for locating customers. On January 27, 1999, PNR made available for review by the Commission and interested parties, pursuant to the terms of the *Protective Order,* the road surrogate point data for all states except Alaska, Iowa, Virginia, Puerto Rico and eighty-four wire centers in various other states. On February 22, 1999, PNR filed a more detailed

description of its road surrogate algorithm.

24. In general, the PNR road surrogate algorithm utilizes the Census Bureau's Topologically Integrated Geographic Encoding and Referencing (TIGER) files, which contain all the road segments in the United States. For each Census Block, PNR determines how many customers and which roads are located within the Census Block. For each Census Block, PNR also develops a list of road segments. The total distance of the road segments within the Census Block is then computed. Roads that are located entirely within the interior of the Census Block are given twice the weight as roads on the boundary. This is because customers are assumed to live on both sides of a road within the interior of the Census Block. In addition, the PNR algorithm excludes certain road segments along which customers are not likely to reside. For example, PNR excludes highway access ramps, alleys, and ferry crossings. The total number of surrogate points is then divided by the computed road distance to determine the spacing between surrogate points. Based on that distance, the surrogate customer locations are uniformly distributed along the road segments.

25. Stopwatch Maps has compiled road surrogate customer location files for six states suitable for use in the federal mechanism. We tentatively conclude, however, that until a more comprehensive data set is made available, the Stopwatch data set will not comply with the *Universal Service Order's* criterion that the underlying data are available for review by the public. In addition, we note that the availability of only six states is of limited utility in a nationwide model.

26. We tentatively conclude that the PNR road surrogate algorithm is a reasonable method for locating customers in the absence of actual geocode data. We note that PNR's methodology of excluding certain road segments is consistent with the Commission's conclusion in the *Platform Order* that certain types of roads and road segments should be excluded because they are unlikely to be associated with customer locations. In addition, we note that PNR's reliance on the Census Bureau's TIGER files ensures a degree of reliability and availability for review of much of the data underlying PNR's road surrogate algorithm, in compliance with criterion eight of the *Universal Service Order.* We note that the HAI proponents contend that use of a surrogate algorithm may overstate the amount of plant necessary to provide supported services. We seek comment on the validity of this contention. We also note that PNR has indicated that it intends to finalize a number of improvements to the road surrogate algorithm and data. For example, PNR states that the new release will incorporate any new input requirements relating to an authoritative wire center list, housing units versus households, and treatment of phone penetration rates. In addition, the new release will include data for all fifty states, Washington, D.C., and Puerto Rico. We seek comment on our tentative conclusion to adopt the PNR road surrogate algorithm to determine customer locations, and to adopt the PNR road surrogate data set for use in the model beginning on January 1, 2000. We also seek comment on any changes that should be made to the PNR methodology to improve the accuracy of the customer locations it generates.

3. Methodology for Estimating the Number of Customer Locations

27. In addition to selecting a source of customer data, we also must select a methodology for estimating the number of customer locations within the geographic region that will be used in developing the customer location data. We also must determine how demand for service at each location should be estimated and how locations should be allocated to each wire center.

28. In the *Universal Service Order*, the Commission concluded that a ''model must estimate the cost of providing service for all businesses and households within a geographic region.'' In the *Inputs Public Notice*, 63 FR 28339 (May 22, 1998), the Bureau sought comment on the appropriate method for defining ''households,'' or residential locations, for the purpose of calculating the forward-looking cost of providing supported services. Model proponents and interested parties have proposed alternative methods to comply with this requirement.

29. The HAI sponsors propose that we use the methodology devised by PNR, which is based upon the number of households in each Census Block, while the BCPM sponsors propose that we use a methodology based upon the number of housing units in each Census Block. A household is an occupied residence, while housing units include all residences, whether occupied or not.

30. Specifically, the HAI sponsors advocate the use of the PNR National Access Line Model to estimate the number of customer locations within Census Blocks and wire centers. The PNR National Access Line Model uses a variety of information sources, including: survey information, the LERG, Business Location Research (BLR) wire center boundaries, Dun & Bradstreet's business database, Metromail's residential database, Claritas' demographic database, and U.S. Census estimates. PNR's model uses these sources to estimate the number of residential and business locations, and the number of access lines demanded at each location. The model makes these estimations for each Census Block, and for each wire center in the United States.

31. At the conclusion of PNR's process for estimating the number of customer locations: (1) PNR's estimate of residential locations is greater than or equal to the Census Bureau's estimate of households, by Census Block Group, and its estimate is disaggregated to the Census Block level, (2) PNR's estimate of demand for both residential and business lines in each study area is greater than or equal to the number of access lines in the Automated Reporting and Management Information System (ARMIS) for that study area, and the estimates are available by location at the Block level, and (3) each customer location is associated with a particular wire center.

32. The BCPM sponsors rely on many of the same data sources as those used in PNR's National Access Line Model. For example, BCPM 3.1 uses wire center data obtained from BLR and business line data obtained from PNR. In estimating the number of residential locations, however, the BCPM sponsors use Census data that include household and housing unit counts from the 1990 Census, updated based upon 1995 Census statistics regarding household growth by county. In addition, rather than attempting to estimate demand by location at the Block level, the BCPM model builds two lines to every residential location and at least six lines to every business.

33. The synthesis model currently calculates the average cost per line by dividing the total cost of serving customer locations by the current number of lines. Because the current number of lines is used in this average cost calculation, the HAI sponsors argue that the total cost should be determined by using the current number of customer locations. The HAI sponsors contend that ''the key issue is the consistency of the numerator and denominator'' in the average cost calculation. The HAI sponsors argue that other approaches are inconsistent because they select the highest possible cost numerator and divide by the lowest possible line denominator, and therefore result in larger than necessary support levels. The HAI sponsors argue that, in

order to be consistent, housing units must be used in the determination of total lines if they are used in the determination of total costs. The HAI sponsors contend that ''[i]f used consistently in this manner, building to housing units as GTE proposes is unlikely to make any difference in cost per line.''

34. In contrast, the BCPM sponsors and other commenters contend that the total cost should include the cost of providing service to all possible customer locations, even if some locations currently do not receive service. Furthermore, the BCPM sponsors contend that if total cost is based on a smaller number of locations, support will not be sufficient to enable carriers to meet their carrier-of-last-resort obligations. The BCPM sponsors also argue that basing the estimate of residential locations on households instead of housing units will underestimate the cost of building a network that can provide universal service. The BCPM sponsors, as well as some other commenters, contend that residential locations should be based on the number of housing units—whether occupied or unoccupied. These commenters contend that only this approach reflects the obligation to provide service to any residence that may request it in the future.

35. We tentatively conclude that PNR's process for estimating the number of customer locations should be used for developing the customer location data. We also tentatively conclude that we should use PNR's methodology for estimating the demand for service at each location, and for allocating customer locations to wire centers. We believe that the PNR methodology is a reasonable method for determining the number of customer locations to be served in calculating the cost of providing supported services. To the extent that the PNR methodology includes the cost of providing service to all currently served households, we tentatively conclude that this is consistent with a forward-looking cost model, which is designed to estimate the cost of serving current demand. As noted by the HAI sponsors, adopting housing units as the standard would inflate the cost per line by using the highest possible numerator (all occupied and unoccupied housing units) and dividing by the lowest possible denominator (the number of customers with telephones).

36. In addition, we do not believe that including the cost of providing service to all housing units will promote universal service to unserved customers or areas. We note that there is no guarantee that carriers would use any support derived from the cost of serving all housing units to provide service to these customers. Many states permit carriers to charge substantial line extension or construction fees for connecting customers in remote areas to their network. If that fee is unaffordable to a particular customer, raising the carrier's support level by including the costs of serving that customer in the model's calculations would have no effect on whether the customer actually receives service. In fact, as long as the customer remains unserved, the carriers would receive a windfall. We recognize that serving unserved customers in such circumstances is an important universal service goal. As discussed in the companion Order and Further Notice adopted on May 28, 1999, we will initiate a separate proceeding in July 1999 to investigate the issue of unserved areas.

37. If we were to calculate the costs of a network that would serve all potential customers, it would not be consistent to calculate the cost per line by using current demand. In other words, it would not be consistent to estimate the cost per line by dividing the total cost of serving all potential customers by the number of lines currently served. We note, however, that the level and source of future demand is uncertain. Future demand might include not only demand from currently unoccupied housing units, but also demand from new housing units, or potential increases in demand from currently subscribing households. We also recognize that population or demographic changes may cause future demand levels in some areas to decline. Given the uncertainty of future demand, we are concerned that including such costs may not reflect forward-looking costs and may perpetuate the system of implicit support.

38. We recognize, however, that additional comment would be helpful with regard to certain issues. For example, if a currently vacant unit will again receive service in the near future, one might argue that it should be included in the calculation of total cost. It is also possible that housing stock is subject to a type of churn that could inflate the number of households used in determining total cost without affecting the total number of lines. That is, a certain percentage of housing units may be repeatedly vacated and then reoccupied, with the specific households involved constantly changing. At any given time, a certain number of housing units might be unoccupied as a result. Under the Census definition, such units are not considered households and therefore may not be included in the number of residential locations estimated by PNR. We seek comment on whether the costs associated with providing service to these housing units should be included in the total cost by identifying an additional number of unoccupied units. The PNR methodology may provide an estimate of the number of residential locations that is greater than the number that currently receive telephone service, however. Therefore PNR's methodology may already account for at least some portion of housing units subject to this type of churn. We seek comment on this issue.

39. We also note that locations outside of existing wire centers will not be included under the PNR methodology. Therefore the accuracy of the wire center boundaries is of importance in estimating the number of customer locations. PNR currently uses BLR wire center information to estimate wire center boundaries. As noted, the BCPM model also uses BLR wire center boundaries, as does Stopwatch Maps in its road surrogate customer location files. PNR has indicated its intent to evaluate alternative sources of wire center boundaries to be used in the customer location data. We therefore seek comment on the accuracy of the BLR wire center boundaries and any possible alternatives to establish more accurate wire center boundaries.

IV. Outside Plant Input Values

A. Copper and Fiber Cable

1. Issues for Comment

40. We now examine the inputs needed to determine outside plant cable costs in the synthesis model. The synthesis model uses several tables to calculate cable costs, based on the cost per foot of cable, which may vary by cable size (*i.e.*, gauge and pair size) and the type of plant (*i.e.*, underground, buried, or aerial). There are four separate tables for copper distribution and feeder cable of two different gauges, and one table for fiber cable. The engineering assumptions and optimizing routines in the model, in conjunction with the input values in the tables, determine which type of cable is used.

41. After the synthesis model has grouped customer locations in clusters, it determines, based on cost minimization and engineering considerations, the appropriate technology type for the cluster and the correct size of cables in the distribution network. Every customer location is connected to the closest SAI by copper cable. The copper cable used in the

local loop typically is either 24-or 26-gauge copper. Twenty-four gauge copper is thicker and therefore is expected to be more expensive than 26-gauge copper. Twenty-four gauge copper also can carry signals greater distances without degradation than 26-gauge copper and, therefore, is used in longer loops. In the synthesis model, if the maximum distance from the customer to the SAI is less than or equal to the copper gauge crossover point, then 26-gauge cable is used. Feeder cable is either copper or fiber. Fiber is used for loops that exceed 18,000 feet, the maximum copper loop length permitted in the model, as determined in the *Platform Order*. When fiber is more cost effective, the model will use it to replace copper for loops that are shorter than 18,000 feet.

a. Engineering Assumptions and Optimizing Routines. 42. Before we consider our proposed input values for cable costs, we discuss certain input values related to the engineering assumptions and optimizing routines in the synthesis model that affect outside plant costs. Specifically, we must determine: (1) whether optimization in the synthesis model should be turned on or off; (2) whether the model should use T–1 technology; and (3) whether the model should use rectilinear or airline distances and the value of the corresponding ''road factor.''

i. Optimization. 43. In the synthesis model, the user has the option of optimizing distribution plant routing via a minimum cost spanning tree algorithm discussed in the model documentation. The algorithm functions by first calculating distribution routing using an engineering ''rule of thumb'' and then comparing the cost with the spanning tree result, choosing the routing that minimizes annualized cost. The user also has the option of not using the distribution optimization feature, thereby saving a significant amount of computation time, but reporting network costs that may be significantly higher than with the optimization. In addition, the user has the option of using the distribution optimization feature only in the lowest density zones.

44. We tentatively conclude that the synthesis model should be run with the optimization turned on when the model is used to calculate the forward looking cost of providing the services supported by the federal mechanism. We point out that the optimization approach represents what a network planning engineer would attempt to accomplish in developing a forward-looking network. This approach also complies with criterion one's requirement that the model must assume the least-cost, most efficient, and reasonable technology for providing the supported service that is currently being deployed. We note, however, that the optimization can substantially increase the model's run time. Preliminary staff analysis of comparison runs with full optimization versus runs with no optimization indicate that, for clusters with line density greater than 500, the rule of thumb algorithm results in the same or lower cost for nearly all clusters. We seek comment on whether an acceptable compromise to full optimization would be to set the optimization factor at ''–p500,'' as described in the model documentation. With this setting the model will optimize distribution plant whenever the density of a cluster is less than or equal to 500 lines per square mile. For purposes of further analysis of the proposed input values, we also anticipate that parties may wish to run the model without optimization turned on to save computing time. After staff has completed its analysis of comparison runs, we intend to make available a spreadsheet showing the estimated percentage change, for each non-rural study area, between running the model with the distribution optimization disabled and running the model with the distribution optimization enabled.

ii. T–1 Technology. 45. A user of the synthesis model also has the option of using T–1 technology as an alternative to copper feeder or fiber feeder in certain circumstances. T–1 is a technology that allows digital signals to be transmitted on two pairs of copper wires at 1.544 Megabits per second (Mbps). If the T–1 option is enabled, the optimizing routines in the model will choose the least cost feeder technology among three options: analog copper, T–1 on copper, and fiber. For serving clusters with loop distances below the maximum copper loop length, the model could choose among all three options; between 18,000 feet and the fiber crossover point, which earlier versions of HCPM set at 24,000 feet, the model could choose between fiber and T–1; and above the fiber crossover point, the model would always use fiber. In the HAI model, T–1 technology is used to serve very small outlier clusters in locations where the copper distribution cable would exceed 18,000 feet. The BCPM sponsors and other LECs contend that T–1 is not a forward looking technology and, therefore should not be used in the synthesis model. The HAI sponsors contend that current advertisements show that T–1 is being used currently.

46. As noted, a number of parties contend that the T–1 on copper technology is not forward looking. Other sources indicate that advanced technologies, like HDSL, potentially can be used on T–1 technology to transmit information at T–1 or higher rates. We seek comment on this issue. We also seek comment on the extent to which HDSL technology presently is being used on T–1.

47. The only input values for T–1 costs on the record in this proceeding are the HAI default values. Because the synthesis model and the HAI model use T–1 differently, we tentatively find that the HAI default values would not be appropriate for use in the synthesis model. In light of the fact that T–1 may not be a forward looking technology and the lack of appropriate input values, we tentatively conclude that we should not use the T–1 option in the synthesis model. We seek comment on our tentative conclusion. We ask that parties who disagree with our tentative conclusion and recommend that the T–1 function be used in the synthesis model propose input values that will accurately estimate the cost of this technology, including what values are needed for the costs of shielded copper, repeaters, and terminals.

iii. Distance Calculations and Road Factor. 48. We tentatively conclude that the synthesis model should use rectilinear distance, rather than airline distance, in calculating outside plant distances, because this more accurately reflects the routing of telephone plant along roads and other rights of way. In fact, research suggests that, on average, rectilinear distance closely approximates road distances. As a result, we tentatively conclude that the road factor in the model, which reflects the ratio between route distance and road distance, should be set equal to 1. We seek comment on these tentative conclusions.

49. We also note that airline distance could be used in the model, if we were to derive accurate road factors. We seek comment on this alternative. Specifically, we seek comment on whether we should use airline miles with wire center specific road factors. Research has shown that the airline distance metric with an appropriate road factor is more accurate than the rectilinear metric. We seek comment on this alternative approach.

b. Cost of Copper Cable. i. Preliminary Issues. 50. The synthesis model uses tables that show the cost per foot of copper cable, by pair size. In selecting input values for the cost of copper cables, we must first address a number of preliminary issues: the extent to which 24- and 26-gauge copper cable should be used in the synthesis model; whether cable installation costs should

differ between feeder and distribution cable; and whether cable installation costs should vary for underground, buried, and aerial cable.

51. *Use of 24- and 26-Gauge Copper.* The HAI default values assume that all copper cable below 400 pairs in size is 24-gauge and all copper cable of 400 pairs and larger is 26-gauge. The BCPM default values include separate costs for 24- and 26-gauge copper of all sizes. We tentatively reject the HAI sponsors' argument that 26-gauge copper costs should be used for all larger pair sizes of copper cable. We tentatively conclude that the model should use both 24-gauge and 26-gauge copper in all available pair-sizes. Based on a preliminary analysis of the results of the structure and cable cost survey, it appears that a significant amount of 24-gauge copper cable in larger pair sizes currently is being deployed. We seek comment on these tentative conclusions.

52. *Distinguishing Feeder and Distribution Cable Costs.* We reaffirm the Commission's tentative conclusion in the *1997 Further Notice*, 62 FR 424572 (August 7, 1997), that the same input values should be used for copper cable whether it is used in feeder or in distribution plant. Although the BCPM sponsors previously disagreed with this tentative conclusion, they have not provided persuasive data for this position. We seek comment on this tentative conclusion.

53. *Distinguishing Underground, Buried, and Aerial Installation Costs.* The HAI and BCPM sponsors both claim that their proposed values for cable costs include the cost of installation. The BCPM defaults provide separate cost estimates for aerial, buried, and underground cable. The HAI default cable costs do not vary by type of plant and, therefore, appear to assume that installation costs are the same for aerial, underground, and buried cable. For buried copper cable, the HAI defaults include a multiplier to estimate the additional cost of the filling compound used in buried cable to protect the cable from moisture. For underground cable, HAI adds a per foot material cost for the conduit material.

54. We tentatively conclude that we should adopt separate input values for the cost of aerial, underground, and buried cable. Based on our analysis of cable cost data, we have found considerable differences in the per foot cost of cable, depending upon whether the cable was strung on poles, pulled through conduit, or buried. We seek comment on this tentative conclusion.

ii. Cost Per Foot of Copper Cable. 55. We now turn to the cost per foot of 24- and 26-gauge copper cable. Both the HAI and BCPM sponsors provide default input values for copper cable costs that are based upon the opinions of their respective experts, but without data that enable us to substantiate those opinions. In addition, the Commission received cable cost data from a number of LECs, including data received in response to the structure and cable cost survey developed by staff, which staff is continuing to analyze, as noted.

56. At the December 11, 1998 workshop, Commission staff described how they had estimated the preliminary copper cable costs, by pair size and by plant type (i.e., aerial, buried, or underground), that had been posted on the Commission's Web site prior to the workshop. For copper cable, the staff estimated high and low values for the cost of the smallest pair size of 26-gauge copper cable based on an analysis of the HAI default values and the values submitted by states filing cost models in this proceeding. These estimates were adjusted for larger pair sizes of 26-gauge cable and different structure types using estimates in Gabel and Kennedy's analysis of RUS data, which was published by the National Regulatory Research Institute (NRRI Study). The cost of 24-gauge copper cable was estimated by applying a multiplier to the 26-gauge estimates based on the relative weight of the copper in these two gauges.

57. While the HAI sponsors support using the publicly available RUS data in the NRRI Study to estimate cable costs, Sprint questions the reliability and suitability of this data, and urges us instead to use the cable cost data provided by incumbent LECs. As Sprint points out, the RUS data contain information from only the two lowest density zones. Because loops are longer in sparsely populated areas, lower gauge copper often is used.

58. We tentatively conclude that we should use, with certain modifications, the estimates in the NRRI Study for the per foot cost of aerial, underground, and buried 24-gauge copper cable. As described, we also tentatively conclude that we should estimate the cost of 26-gauge copper cable by adjusting our 24-gauge estimates with ratios derived from cost data submitted by several non-rural LECs. We seek comment on these tentative conclusions and proposed values.

59. Although the RUS data were collected from the two lowest density zones, we note that none of the models considered by the Commission has the capability of varying cable costs by density zones. Nor have parties proposed cable cost values that vary by density zone. We also believe that Sprint has mischaracterized the analysis of the RUS data in the NRRI Study. For example, Sprint challenges the validity of the study because some of the observations have zero values for labor or material, while failing to recognize that these values were excluded from Gabel and Kennedy's regression analysis. Similarly, Sprint's complaint that Gabel and Kennedy do not analyze the components of total cable costs, labor and material, separately overlooks that Gabel and Kennedy's regression analysis is designed to explain the variation in total costs.

60. The NRRI Study provides estimates for outside plant structure and cable costs using cost data derived from construction contracts supplied by the RUS for a sample of companies that operate under various soil, weather, and population density conditions. In generating these estimates, Gabel and Kennedy used standard regression techniques to measure the effect of geological and density conditions on cable and structure costs. In general, the econometric formulations that Gable and Kennedy developed to estimate cable costs measure the effect on these costs of cable size and the placement of two or more cables on the same route.

61. We tentatively conclude that one substantive change should be made to Gabel and Kennedy's analysis. Gabel and Kennedy used the ordinary least squares statistical technique to estimate the cost of structure and cables. The ordinary least squares technique fits a straight line to the data by minimizing the sum of squared prediction errors. The ordinary least squares technique is efficacious, however, only for a data set lacking statistical outliers. Such outliers have an undue influence on regression results, since the residual associated with each outlier is squared in calculating the regression. In order to mitigate the influence of such outlier values, statisticians have developed so-called robust regression techniques for estimating regression equations. We tentatively conclude that a robust regression technique should be used for analyzing the RUS data. We seek comment on this tentative conclusion.

62. Specifically, we tentatively conclude that the robust regression technique proposed by Huber should be applied to the RUS data. Essentially, this algorithm uses a standard statistical criterion to determine the most extreme outliers, and excludes them. Thereafter, as suggested by Huber, it iteratively performs a regression, then for each observation calculates an observation weight based on the absolute value of the observation residual. Finally, the

procedure performs a weighted least squares regression using the calculated weights. This process is repeated until the values of the weights effectively stop changing. We have used the robust regression parameter estimates for cable, conduit, and buried structure. The use of robust estimation did not improve the statistical properties of the estimators for pole costs, so we tentatively conclude that the ordinary least squares technique is appropriate for pole costs. We seek comment on these tentative conclusions and analysis.

63. *24-Gauge Aerial Copper Cable.* We tentatively conclude that we should use the regression equation in the NRRI Study, as modified by the Huber methodology described, to estimate the cost of 24-gauge aerial copper cable, with three adjustments.

64. First, we propose to adjust the equation to reflect the superior buying power that non-rural LECs may have in comparison to the LECs represented in the RUS data. We seek comment on whether an adjustment for superior bargaining power is necessary, and, if so, how such an adjustment should be made.

65. Based on data entered into the record in a proceeding before the Maine Public Utilities Commission, Gabel and Kennedy determined that Bell Atlantic's material costs for aerial copper cable are approximately 15.2 percent less than these costs for the RUS companies. We tentatively conclude that this figure represents a reasonable estimate of the difference in the material costs that non-rural LECs pay in comparison to those that the RUS companies pay. To reflect this degree of buying power in the cable cost estimates that we derive for non-rural LECs, we propose to reduce the regression coefficient for the number of copper pairs by 15.2 percent for aerial copper cable. This coefficient measures the incremental or additional cable cost associated with one additional copper pair and therefore largely reflects the material cost of the cable. We seek comment on this proposed adjustment. We also invite parties to suggest alternative methods for capturing the impact of superior buying power.

66. Second, we propose to adjust the equation in the NRRI Study to account for LEC engineering costs, which were not included in the RUS cable data. The BCM2 default values include a loading of five percent for engineering. The HAI sponsors claim that engineering constitutes approximately 15 percent of the cost of installing outside plant cables. This percentage includes both contractor engineering and LEC engineering. The cost of contractor engineering already is reflected in the RUS cable cost data. Based on the record, we tentatively conclude that we should add a loading of 10 percent to the material and labor cost of the cable (net of LEC engineering and splicing costs) to approximate the cost of LEC engineering. We seek comment on this tentative conclusion and invite commenters to justify an alternative loading factor for LEC engineering.

67. Third, we propose to adjust the equation to account for splicing costs, which also were not included in the RUS data. In the NRRI Study, Gabel and Kennedy determined that the ratio of splicing costs to copper cable costs (excluding splicing and LEC engineering costs) is 9.4 percent for RUS companies. We tentatively conclude that we should adopt a loading of 9.4 percent for splicing costs. We seek comment on this tentative conclusion.

68. *24-Gauge Underground Copper Cable.* We tentatively conclude that we should use the regression equation in the NRRI Study, as modified by the Huber methodology described, to estimate the cost of 24-gauge underground copper cable. We also tentatively conclude that we should use the same three adjustments proposed for 24-gauge aerial copper cable, with one exception. We tentatively conclude that we should reduce the regression coefficient for the number of copper pairs by 16.3 percent, to reflect superior buying power, based on the analysis in the NRRI study. We seek comment on the use of this equation and the proposed adjustments.

69. *24-Gauge Buried Copper Cable.* We tentatively conclude that it is necessary to modify the regression equation in the NRRI Study, as modified by the Huber methodology described, to estimate the cost of a 24-gauge buried copper cable, because the equation in the study includes labor and material costs for both buried cable and structure. We seek comment on this tentative conclusion and proposed equation.

70. We propose to make the same three adjustments to this equation as we proposed for 24-gauge aerial and underground cables, with the exception of the adjustment for superior buying power. Because the NRRI Study does not include a recommendation for such an adjustment for buried cable, we tentatively conclude we should use 15.2 percent, which is the lower of the reductions used for aerial and underground cable. We seek comment on the use of these adjustments for 24-gauge buried cable.

71. *26-Gauge Copper Cable.* Because the NRRI Study did not provide estimates for 26-gauge copper cable, we must either use another data source or find a method to derive these estimates from those for 24-gauge. The HAI sponsors support the proposal presented by Commission staff at the workshop to use the relative weight of copper to adjust the 24-gauge copper costs to derive 26-gauge copper costs, although they would make further adjustments to reflect the cost of 26-gauge copper for cable sizes of 400 pairs and larger. The BCPM sponsors challenge the assumption that the cost of copper cable is closely tied to the relative weight of the copper in the cable. Both the HAI sponsors and the BCPM sponsors argue that the cost of splicing is not directly a function of investment, but rather is primarily a function of the number of pairs to be spliced, and the distance between splices. Although they agree that splicing costs should be estimated using the average cost per pair-foot, they disagree over what those costs should be.

72. We tentatively conclude that we should derive cost estimates for 26-gauge cable by adjusting our estimates for 24-gauge cable. We agree with the BCPM sponsors that the cost of copper cable should not be estimated based solely on the relative weight of the cable. Instead, we propose to use the ordinary least squares regression technique to estimate the ratio of the cost of 26-gauge to 24-gauge cable for each plant type (*i.e.*, aerial, underground, buried). We propose to estimate these ratios using data on 26-gauge and 24-gauge cable costs submitted by Aliant and Sprint and the BCPM default values for these costs. While we would prefer to develop these ratios based on data from more than these three sources, we tentatively conclude that these are the best data available on the record for this purpose. We seek comment on these tentative conclusions and proposed analysis, including the regression techniques described. We invite parties to propose alternative methods of deriving cost estimates for 26-gauge cable.

c. Cost of Fiber Cable. 73. In selecting input values for fiber cable costs, we must determine values for the cost per foot of fiber for various strand sizes for aerial, underground, and buried cable. Both the HAI and BCPM sponsors provide default input values for fiber cable costs that are based upon the opinions of their respective experts, without data enabling us to substantiate those opinions. In addition, the Commission received cable cost data from a number of LECs, including data received in response to the structure and cable cost survey, which staff is continuing to analyze, as noted.

74. At the December 11, 1998 workshop, Commission staff described how they had computed the preliminary fiber cable costs, by pair size and by plant type (aerial, buried, or underground) that had been posted on the Commission's Web site prior to the workshop. Using a methodology similar to the one used for copper cable, staff estimated the cost of the smallest size fiber cable based on an analysis of proposed values and used the analysis in the NRRI Study to derive costs for larger sizes.

75. We tentatively conclude that we should use the RUS data and the analysis in the NRRI Study, with certain adjustments, to estimate fiber cable costs. For the reasons discussed for copper cable, we also tentatively conclude that the cost of fiber cable will vary for aerial, underground, and buried plant. We tentatively select the input values for the per foot cost of aerial, underground, and fiber cable in various strand sizes, as shown. We seek comment on these tentative conclusions and proposed values.

76. *Aerial Fiber Cable.* We tentatively conclude that we should use the regression equation in the NRRI Study, as modified by the Huber methodology described, to estimate the cost of aerial fiber cable, with three adjustments similar to those made for copper cable. We seek comment on this tentative conclusion.

77. As noted, we propose three adjustments to the equation used in the NRRI Study to estimate the cost of aerial fiber cable. First, based on the NRRI Study, we propose to reduce by 33.8 percent the regression coefficient for the number of fiber strands, to reflect the superior buying power of non-rural LECs. Second, for the reasons described earlier, we tentatively conclude that we should add a loading of 10 percent to the material and labor cost of the cable (net of LEC engineering and splicing costs) to approximate the cost of LEC engineering. Finally, we tentatively conclude that we should add a loading for splicing costs of 4.7 percent to the material and labor cost of the cable (net of LEC engineering and splicing costs), based on the estimates in the NRRI Study. We seek comment on these tentative conclusions and proposed adjustments.

78. *Underground Fiber Cable.* We tentatively conclude that we should use the regression equation in the NRRI Study, as modified by the Huber methodology described, to estimate the cost of underground fiber cable, with three adjustments similar to those made for aerial fiber cable. We seek comment on this tentative conclusion.

79. As noted, we propose three adjustments to the NRRI equation for the cost of underground fiber cable. First, based on the NRRI Study, we propose to adjust downward by 27.8 percent the regression coefficient for the number of fiber strands, to reflect the superior buying power of non-rural LECs. Second, for the reasons described earlier, we tentatively conclude that we should add a loading of 10 percent to the material and labor cost of the cable (net of LEC engineering and splicing costs) to approximate the cost of LEC engineering. Finally, we tentatively conclude that we should add a loading for splicing costs of 4.7 percent to the material and labor cost of the cable (net of LEC engineering and splicing costs), based on the estimates in the NRRI Study. We seek comment on these tentative conclusions and proposed adjustments.

80. *Buried Fiber Cable.* We tentatively conclude that it is necessary to modify the regression equation in the NRRI Study, as modified by the Huber methodology described, to estimate the cost of a buried fiber cable, because the equation in the study includes labor and material costs for both buried fiber cable and structure. We seek comment on this tentative conclusion and proposed equation.

81. We also propose three adjustments to the proposed equation. First, based on the NRRI Study, we propose to reduce by 27.8 percent the regression coefficient for the number of fiber strands, to reflect the superior bargaining power of non-rural LECs. Second, for the reasons described earlier, we tentatively conclude that we should add a loading of 10 percent to the material and labor cost of the cable (net of LEC engineering and splicing costs) to approximate the cost of LEC engineering. Finally, we tentatively conclude that we should add a loading for splicing costs of 4.7 percent to the material and labor cost of the cable (net of LEC engineering and splicing costs), based on the estimates in the NRRI Study. We seek comment on these tentative conclusions and proposed adjustments.

c. Cable Fill Factors. 82. In determining appropriate cable sizes, network engineers include a certain amount of spare capacity to accommodate administrative functions, such as testing and repair, and some expected amount of growth. The percentage of the total usable capacity of cable that is expected to be used to meet anticipated demand is referred to as the cable fill factor. If cable fill factors are set too high, the cable will have insufficient capacity to accommodate small increases in demand or service outages. In contrast, if cable fill factors are set too low, the network could have considerable excess capacity for many years. While carriers may choose to build excess capacity for a variety of reasons, we must determine the appropriate cable fill factors to use in the federal mechanism. If the fill factors are too low, the resulting excess capacity will increase the model's cost estimates to levels higher than an efficient firm's costs, potentially resulting in excessive universal service support payments.

83. *Variance Among Density Zones.* In general, both the HAI and BCPM sponsors provide default fill factors for copper cable that vary by density zone, and they agree that fill factors should be lower in the lowest density zones. HAI sponsors claim that an outside plant engineer is more interested in providing a sufficient number of spares than in the ratio of working pairs to spares, so the appropriate fill factor will vary with cable size. For example, 75 percent fill in a 2400 pair cable provides 600 spares, whereas a 50 percent fill in a six pair cable provides only three spares. Because smaller cables are used in lower density zones, HAI recommends that lower fill factors be used in the lowest density zones to ensure there will be enough spares available. The BCPM sponsors claim that less dense areas require lower fill ratios because the predominant plant type is buried and it is costly to add additional capacity after installation. We tentatively agree with the HAI and BCPM sponsors that fill factors for copper cable should be lower in the lowest density zones, which is reflected in the fill factors that we propose in this Notice. We seek comment of this tentative finding.

84. *Distribution Fill Factors.* The fill factors proposed by the HAI sponsors for distribution cable are somewhat lower than for copper feeder cable. The BCPM default fill factors for distribution cable, on the other hand, currently are set at 100 percent for all density zones. This difference is related to the differences between certain assumptions that were made in the HAI and BCPM models. The HAI proponents claim that the level of spare capacity provided by their default values is sufficient to meet current demand plus some amount of growth. This is consistent with the HAI model's approach of designing plant to meet current demand, which on average is 1.2 lines per household. BCPM, on the other hand, designs outside plant with the assumption that every residential location has two lines, which is more than current demand. Because

it is costly to add distribution plant at a later point in time, incumbent LECs typically build enough distribution plant to meet not only current demand, but also anticipated future demand. BCPM adopts this convention. Setting the fill factor at 100 percent in BCPM offsets BCPM's assumption that every household has two lines and the resulting estimation of appropriate cable sizes is sufficient to meet current demand, rather than long term growth.

85. In a meeting with Commission staff, Ameritech raised the issue of whether industry practice is the appropriate guideline for determining fill factors to use in estimating the forward-looking economic cost of providing the services supported by the federal mechanism. Ameritech claims that forward-looking fill factors should reflect enough capacity to provide service for new customers for a few years until new facilities are built, and should account for the excess capacity required for maintenance and testing, defective copper pairs, and churn.

86. We tentatively conclude that the fill factors selected for use in the federal mechanism generally should reflect current demand, and not reflect the industry practice of building distribution plant to meet ''ultimate'' demand. The fact that industry may build distribution plant sufficient to meet demand for ten or twenty years does not necessarily suggest that these costs should be supported by universal service support mechanisms. This also appears to reflect the assumptions underlying the HAI and BCPM default fill factors. Because the synthesis model designs outside plant to meet current demand in the same manner as the HAI model, we believe the fill factors should be set at less than 100 percent. We tentatively select the HAI defaults for distribution fill factors and tentatively conclude that they reflect the appropriate fill needed to meet current demand. We seek comment on these tentative conclusions.

87. *Feeder Fill Factors.* In contrast to distribution plant, feeder plant typically is designed to meet only current and short term capacity needs. The BCPM copper feeder default fill factors are slightly higher than HAI's, but both the HAI and BCPM default values appear to reflect current industry practice of sizing feeder cable to meet current, rather than long term, demand. Because both the HAI and BCPM default values assume that copper feeder fill reflects current demand, we tentatively select copper feeder fill factors that are the average of the HAI and BCPM default values. We seek comment on these tentative selections.

88. *Fiber Fill Factors.* Because of differences in technology, fiber fill factors typically are higher than copper feeder fill factors. Standard fiber optic multiplexers operate on four fiber strands: primary optical transmit, primary optical receive, redundant optical transmit, and redundant optical receive. In determining appropriate fiber cable sizes, network engineers take into account this 100 percent redundancy in determining whether excess capacity is needed that would warrant application of a fill factor. Both the HAI and BCPM models use the standard practice of providing 100 percent redundancy for fiber and set the default fiber fill factors at 100 percent. We tentatively conclude that the input value for fiber fill in the federal mechanism should be 100 percent. We seek comment on this tentative conclusion.

B. Structure Costs

1. Issues for Comment

89. The synthesis model uses structure cost tables that identify the per foot cost of structure by type (aerial, buried, or underground), loop segment (distribution or feeder), and terrain conditions (normal, soft rock, or hard rock), for each of the nine density zones. For aerial structure, the cost per foot that is entered in the model is calculated by dividing the total installed cost per telephone pole by the distance between poles. As described, we tentatively conclude that we should use, with certain modifications, the estimates in the NRRI Study for the per foot cost of aerial, underground, and buried structure. In general, these estimates are derived from regression equations that measure the effect on these costs of density, water, soil, and rock conditions.

a. Cost of Aerial Structure. 90. We tentatively conclude that we should use the regression equation for aerial structure in the NRRI Study as a starting point. We propose to use this equation to develop proposed input values for the labor and material cost for a 40-foot, class four telephone pole. We develop separate pole cost estimates for normal bedrock, soft bedrock, and hard bedrock. The regression coefficients estimate the combined cost of material and supplies. The NRRI Study reports that the average material price for a 40-foot, class four pole is $213.94. We note that this estimate is very close to results obtained from the data submitted in response to the *1997 Data Request.* According to the Commission staff's analysis of these data, the unweighted average material cost of a 40-foot, class four pole is $213.97, and the weighted average, by line count, is $228.22. We seek comment on this tentative conclusion and analysis.

91. We tentatively conclude that we should add to these estimates the cost of anchors, guys, and other materials that support the poles, because the RUS data from which this regression equation was derived do not include these costs. In the NRRI Study, Gabel and Kennedy used the RUS data to develop the following cost estimates for anchors, guys and other pole-related items: $32.98 in rural areas, $49.96 in suburban areas, and $60.47 in urban areas. We tentatively conclude that these are reasonable estimates for the cost of anchors, guys, and other pole-related items. We seek comment on these tentative conclusions and proposed values.

92. We also tentatively add an estimate for the cost of LEC engineering, which is not reflected in the data from which Gabel and Kennedy derived cost estimates for poles and anchors, guys, and pole-related materials. For the reasons described for copper and fiber cable, we tentatively conclude that we should add a loading of 10 percent to the material and labor cost (net of LEC engineering) for poles, anchors, guys, and other pole-related items. We seek comment on these tentative conclusions and invite proposals justifying an alternative loading factor for LEC engineering.

93. In order to obtain proposed input values that can be used in the model, we must convert the estimated pole costs into per foot costs for each of the nine density zones. For purposes of this computation, we propose to use for density zones 1 and 2 the per pole cost that we have estimated for rural areas, based on the NRRI Study; for density zones 3 through 7 the per pole cost for suburban areas; and for density zones 8 and 9 the per pole cost for urban areas. We then divide the estimated cost of a pole by the estimated distance between poles. We propose to use the following values for the distance between poles: 250 feet for density zones 1 and 2; 200 feet for zones 3 and 4; 175 feet for zones 5 and 6; and 150 feet for zones 7, 8, and 9. For the most part, these values are consistent with both the HAI and BCPM defaults. We seek comment on these proposals.

b. Cost of Underground Structure. 94. We tentatively conclude that we should adopt a similar methodology to estimate the cost of underground structure, as we proposed for the cost of aerial structure. We tentatively conclude that we should use the equation set forth as a starting point for this estimate. We propose to use this equation to develop proposed

input values for the labor and material cost for underground cable structure. We develop separate cost estimates for underground structure in normal bedrock, soft bedrock, and hard bedrock for density zones 1 and 2. As we did for aerial structure, we tentatively conclude that we should add a loading factor of 10 percent for LEC engineering. We seek comment on these tentative conclusions.

95. We are able to develop directly from the regression equation cost estimates for underground structure only in density zones 1 and 2, because the RUS data is from companies that operate only in those density zones. We tentatively conclude that we should derive cost estimates for density zones 3 through 9 by extrapolating from the estimates for density zone 2. We further tentatively conclude that we should perform such extrapolation based on the growth rate between density zones in the BCPM and HAI default values for underground and buried structure. Although we would prefer to rely on data specific to the density zone, rather than extrapolated, we tentatively conclude that, based on our current analysis, this is the best data currently available for this purpose. We seek comment on these tentative conclusions. We seek comment on this proposed method and invite parties to suggest alternative methods for estimating costs in density zones 3 through 9.

c. Cost of Buried Structure.

96. We tentatively conclude that we should use the modified equation for estimating the cost of 24-gauge buried copper cable and structure to estimate the cost of buried structure. It is necessary to modify this equation because estimates derived from it include labor and material costs for both buried cable and structure. We seek comment on this tentative conclusion.

97. For the reasons described, we tentatively conclude that we should add a loading of 10 percent for LEC engineering to the estimates generated by the modified equation. We seek comment on this tentative conclusion.

98. We are able to develop directly from the regression equation cost estimates for buried structure only in density zones 1 and 2, because the RUS data is from companies that operate only in those density zones. We tentatively conclude that we should derive cost estimates for density zones 3 through 9 by extrapolating from the estimates for density zone 2. We further tentatively conclude that we should perform such extrapolation based on the same method proposed for estimating the cost of underground structure. We seek comment on these tentative conclusions.

d. Plant Mix. 99. As discussed, we have tentatively selected input values for the costs of cable and outside plant structure that differ for aerial, buried, and underground cable and structure. Because these cost differences can be significant, the relative amount of plant type in any given area, *i.e.*, the plant mix, plays a significant part in determining total outside plant investment. The synthesis model provides three separate plant mix tables, for distribution, copper feeder, and fiber feeder, which can accept different percentages for each of the nine density zones. Although we tentatively propose using nationwide input values for plant mix, as we have for other input values, we seek comment on an alternative to nationwide plant mix input values, as discussed.

100. The BCPM sponsors claim that in low densities there generally is a greater percentage of buried plant than underground plant, and conversely, in higher densities there is more underground than buried plant. The BCPM default plant mix values reflect these assumptions. Although the HAI default plant mix values for feeder plant also reflect these assumptions, HAI's assumptions with respect to distribution plant mix are quite different than BCPM's, as discussed. The HAI sponsors suggest that aerial plant is still the most prevalent plant type, but claim that their default plant mix values reflect an increasing trend toward the use of buried cable in new subdivisions. The HAI default values generally assume that there is more aerial plant than the BCPM default values. The BCPM defaults have separate values for plant mix in hard rock terrain, which generally assume there is slightly more aerial and less buried plant than the normal and soft rock terrain defaults.

101. *Distribution Plant.* The BCPM default values for distribution plant assume that there is no underground plant in the lowest density zone and the percentage increases with each density zone to 90 percent underground distribution plant in the highest density zone. In contrast, the HAI default values for distribution plant mix place no underground structure in the six lowest density zones and assume that only 10 percent of the structure in the highest density zone is underground. The BCPM default values assume there is no aerial plant in the highest density zone in normal and soft rock terrain, and 10 percent aerial plant in hard rock terrain. In contrast, the HAI default values assume that there is significantly more aerial cable, 85 percent, in the highest density zone, but notes that this includes riser cable within multi-story buildings and ''block cable'' attached to buildings, rather than to poles.

102. We tentatively select input values for distribution plant mix that more closely reflect the assumptions underlying BCPM's default values than HAI's default values for several reasons. The synthesis model does not design outside plant that contains either riser cable or block cable, so we do not believe it would be appropriate to assume that there is as high a percentage of aerial plant in densely populated areas as the HAI default values assume. Although our proposed plant mix values assume somewhat less underground structure in the lower density zones than the BCPM default values, we disagree with HAI's assumption that there is very little underground distribution plant and none in the six lowest density zones. We tentatively select the distribution plant mix values set forth, and seek comment on our tentative conclusions. We tentatively propose input values, for the lowest to the highest density zones, that range from zero percent to 90 percent for underground plant; 60 to zero percent for buried plant; and 40 to ten percent for aerial plant.

103. *Feeder Plant.* The default plant mix percentages for feeder plant are generally similar in the BCPM and the HAI models. Although the BCPM default values vary between normal or soft rock terrain and hard rock terrain, as noted, and the HAI default values differ between copper and fiber feeder, the plant mix ratios across density zones are similar. For example, both the BCPM default values and the HAI default values assume that there is only five or ten percent of underground feeder plant in the lowest density zone. The HAI defaults assume there is somewhat more aerial feeder cable than the BCPM defaults, except for fiber feeder cable in the four lowest density zones. The BCPM defaults assume there is no aerial feeder plant in the three highest density zones, except in hard rock terrain. Despite these differences, the relative amounts of aerial and buried plant across density zones are generally similar.

104. We tentatively select input values for feeder plant mix, set forth, that generally reflect the assumptions underlying the BCPM and HAI default plant mix percentages, with certain modifications. We tentatively propose input values, for the lowest to the highest density zones, that range from five percent to 95 percent for underground plant; 50 to zero percent for buried plant; and 45 to five percent

for aerial plant. Based on the Commission staff's preliminary review of the structure and cable survey data, the proposed values, unlike the HAI and the BCPM (for normal and soft rock) default values, assume that there is no buried plant in the highest density zone. In contrast to the BCPM defaults, the proposed values assume there is some aerial plant in the three highest density zones. We tentatively find that it is reasonable to assume that there is some aerial feeder plant in all density zones, as HAI does, particularly in light of our assumption that there is no buried feeder in the highest density zone, where aerial placement would be the only alternative to underground plant. Although the HAI sponsors have proposed plant mix values that vary between copper feeder and fiber feeder, they have offered no convincing rationale for doing so. We tentatively conclude that, like the BCPM defaults, our proposed plant mix ratios should not vary between copper feeder and fiber feeder. We seek comment on our tentative conclusions.

105. *Alternatives to Nationwide Plant Mix Values.* In the 1997 Further Notice, the Commission tentatively concluded that plant mix ratios should vary with terrain as well as density zones. Because the synthesis model does not provide separate plant mix tables for different terrain conditions, the proposed nationwide plant mix values do not vary by terrain. One method of varying plant mix by terrain would be to add separate plant mix tables, as there are in BCPM, to the synthesis model. We observe that, while the BCPM model provides separate plant mix tables, the BCPM default values reflect only slightly more aerial and less buried plant in hard rock terrain than in normal and soft rock terrain. Another method of varying plant mix would be to use company specific or state specific input values for plant mix as advocated by the BCPM sponsors and other LECs.

106. We generally have chosen not to use study area specific input values in the federal mechanism, and recognize that historical plant mix ratios may not reflect an efficient carrier's plant type choice today. On the other hand, historical plant mix also may reflect terrain conditions that will not change over time. For example, because it is costly to bury cable in hard rock, a carrier serving a very rocky area would tend to use more aerial than buried plant. The Commission staff's analysis of current ARMIS data reveals a great deal of variability in plant mix ratios among the states. In certain state proceedings, U S West has proposed an algorithm for adjusting plant mix to reflect its actual sheath miles as reported in ARMIS. We seek comment on a modified version of this algorithm as an alternative method of determining plant mix percentages.

107. The proposed algorithm uses ARMIS 43–08 data on buried and aerial sheath distances and trench distances to allocate model determined structure distance between aerial, buried, and underground structures. The first step is to set the underground structure distance equal to the ARMIS trench distance and to allocate that distance among the density zones on the basis of the nationwide plant mix defaults. Then an initial estimate of aerial plant is calculated as the sum of the synthesis model structure distances by density zone multiplied by the nationwide aerial plant mix defaults. A second estimate of aerial plant is calculated by multiplying structure distance less trench miles by the aerial percentage of total ARMIS sheath miles. Then an adjustment ratio is calculated by dividing the second estimate by the initial estimate. This adjustment ratio is then applied to each density zone to adjust the nationwide default so that the final synthesis model plant mix reflects the study area specific plant mix. The buried plant mix percentage is determined as a residual equal to one minus sum of the underground and aerial percentages. We seek comment on this alternative to nationwide plant mix values. We also invite parties to suggest other alternatives to determine plant mix in the synthesis model.

108. We also seek comment on whether we should allow the synthesis model to choose the plant mix on the basis of minimum annual cost. We note that this optimization would be constrained to reflect the embedded underground plant percentage, because underground plant is typically deployed in relatively dense areas for reasons of public safety. Embedded percentages of aerial and buried plant, on the other hand, may reflect zoning ordinances but we note that these ordinances in turn may reflect purely aesthetic concerns rather than public safety. If we were to determine that we should use study area specific plant mix input values, we seek comment on whether the synthesis model should be permitted to use its optimization feature for percentages of aerial and buried plant.

C. Structure Sharing

1. Issues for Comment

109. We tentatively adopt the following structure sharing percentages that represent the percentage of structure costs to be assigned to the LEC. For aerial structure, we tentatively assign 50 percent of structure cost in density zones 1–6 and 35 percent of the costs in density zones 7–9 to the LEC. For underground and buried structure, we tentatively assign 90 percent of the cost in density zones 1–2, 85 percent of the cost in density zone 3, 65 percent of the cost in density zones 4–6, and 55 percent of the cost in density zones 7–9 to the LEC.

110. We believe that the structure sharing percentages that we tentatively adopt reflect a reasonable percentage of the structure costs that should be assigned to the LEC. We note that our tentative conclusions reflect the general consensus among commenters that structure sharing varies by structure type and density. While disagreeing on the extent of sharing, the majority of commenters agree that sharing occurs most frequently with aerial structure and in higher density zones. For example, no commenter attributes more than 50 percent of the cost of aerial structure to the LEC. The sharing values that we tentatively adopt reflect these guidelines. In addition, we note that the Washington Utilities and Transportation Commission has adopted structure sharing values that are similar to those that we tentatively adopt. We also note that the sharing values that we tentatively adopt fall within the range of values proposed by HAI and BCPM.

111. In addition, we agree with the Nebraska Public Service Commission that there are some opportunities for sharing even in the lowest density zones. As noted by the Nebraska Commission, ''[e]ven in these more remote regions of the state, there will be some opportunities for sharing as new homes and businesses are constructed.'' We therefore do not assign 100 percent of the cost of buried or underground structure to the LEC in the lowest density areas, as suggested by the BCPM proponents.

112. We seek comment on the tentative conclusions set forth in this section. In addition, we seek comment on AT&T's contention that the structure sharing percentages should reflect the potential for sharing, rather than the LEC's embedded sharing practice.

D. Serving Area Interfaces

1. Issues for Comment

a. Cost of a 7200 Pair SAI.

113. Our proposed approach takes into account the cost of the following SAI components for a 7200 pair indoor SAI: building entrance splicing and distribution splicing; protectors; tie cables; placement of feeder blocks; placement of cross-connect jumpers/

punch down; and placement of distribution blocks. Of these, we tentatively conclude that protector and splicing costs are the main drivers of SAI costs, and cross-connect costs and feeder block and distribution block installation costs greatly contribute to the difference in Sprint's and the HAI proponents' indoor SAI costs. Based upon the following analysis of the record regarding these costs, we propose a total cost of $21,708 for the 7200 pair indoor SAI. We seek comment on this tentative analysis.

114. *Protector Costs.* The cost of the protector is the single greatest contributor to the difference in Sprint's and HAI's indoor SAI costs. HAI proposes a cost of $2.00 per pair for protector material, and Sprint initially proposed a $6.62 cost per pair for protector material. In its review of Sprint's proposed cost, staff concluded that all of the parts identified in Sprint's proposal may not be necessary for SAI construction. Staff also believed, however, that HAI's proposal was for less than a fully functional SAI, and found HAI's proposed cost to be too low. Having analyzed the *ex parte* submissions, staff proposed a cost of $4.00 per pair for protector material. In its February 4, 1999, *ex parte* submission, Sprint agreed that $4.00 is a reasonable estimate of the cost. We tentatively adopt this proposed value and seek comment.

115. *Splicing and Labor Rates.* HAI and Sprint propose different splicing rates, but do not dispute splice set-up time. The HAI sponsors propose a splicing rate of 300 pairs per hour, while Sprint argues for a splicing rate of 100 pairs per hour. We believe that HAI's proposed rate is a reasonable splicing rate under optimal conditions, and therefore, we tentatively conclude that Sprint's proposed rate is too low. We note that the HAI sponsors have submitted a letter from AMP Corporation, a leading manufacturer of wire connectors, in support of the HAI rate. We recognize, however, that splicing under average conditions does not always offer the same achievable level of productivity as suggested by the HAI sponsors. For example, splicing is not typically accomplished under controlled lighting or on a worktable. Having accounted for such variables, we propose to adjust the splicing rate to 250 pairs per hour. We also propose a $60.00 per hour labor rate for splicing, which is within the range of filings on the record. We seek comment on these proposed values.

116. *Cross-Connect Costs.* The cross-connect is the physical wire in the SAI that connects the feeder and distribution cable. Sprint asserts that the ''jumper'' method generally will be employed to cross-connect in a SAI. In contrast, HAI suggests that the ''punch down'' method is generally used to cross-connect. We tentatively conclude that neither the jumper method nor the punch down method is used exclusively in SAIs. In buildings with high churn rates, such as commercial buildings, carriers may be more likely to use the jumper method. On the other hand, in residential buildings, where changes in service are less likely, carriers may be more likely to use the less expensive punch down method. Based on the record, it appears that both methods are commonly used, and that neither is used substantially more than the other. Therefore, we tentatively conclude that we should assume that each method will be used half the time. We seek comment on this tentative conclusion. In particular, we invite parties to justify a particular allocation between the jumper and punch down methods.

117. *Feeder Block and Distribution Block Installation Rates.* Sprint proposes an installation rate of 60 pairs per hour, while the HAI sponsors propose 400 pairs per hour. Because neither feeder block installation nor distribution block installation is a complicated procedure, we tentatively conclude that Sprint's rate of 60 pairs per hour is too low. We recognize, however, that installation conditions are not always ideal. Like splicing, feeder block and distribution block installations are not typically accomplished under controlled lighting or on a worktable. Having accounted for such variables, we propose a rate of 200 pairs per hour. We seek comment on this proposed value.

b. Cost of Other SAI Sizes. 118. Because we currently do not have similar component-by-component data for other SAI sizes, we propose to determine the costs of the other SAI sizes by extrapolating from the cost of the 7200 pair indoor SAI. We believe that this is a reasonable approach because there is a linear relationship between splicing and protection costs, which are the main drivers of cost, and the number of pairs in the SAI. We look to the HAI data to determine the relationship in cost among the various sizes of SAI. Specifically, we develop a ratio of our proposed cost for a 7200 pair indoor SAI to the cost proposed by HAI. We then propose to apply this ratio, 2.25, to the values submitted by the HAI sponsors for other sizes of indoor and outdoor SAIs. Applying this factor, we tentatively adopt the cost estimates for indoor and outdoor SAIs. We propose to use the HAI, rather than BCPM data, in this manner because BCPM has not submitted estimates for all of the SAI sizes used in the model. We note that using the BCPM data in this way would result in roughly the same estimates. We seek comment on these tentative conclusions and proposed values.

E. Digital Loop Carriers

1. Issues for Comment

119. Both the sponsors of BCPM and HAI have submitted default values for DLC costs. Because these values are based on the opinions of experts without data to enable us to substantiate these opinions, however, we tentatively conclude that we should not rely on these data. We also tentatively conclude that the most reliable data on DLC costs available to the Commission at this time are the contract data submitted to the Commission in response to the *1997 Data Request,* and in *ex parte* submissions following the December 11, 1998 workshop. We seek comment on these tentative conclusions.

120. Following their submission of DLC data to the Commission in response to the *1997 Data Request,* US West, Bell South, and ATU resubmitted their data on the record in this proceeding. At the December 11, 1998 workshop, staff of the Common Carrier Bureau discussed the DLC costs data on the record in this proceeding. In an effort to elicit further discussion of DLC input values, staff presented a template of the components of a typical DLC. The HAI sponsors, GTE, and Aliant submitted data using the template of DLC costs. Staff found the data submitted by the HAI sponsors to be significantly lower than the contract data on the record, and staff concluded that it would be inappropriate to use it, especially as no support was provided in justification. Because the data submitted by the companies are based on actual costs incurred in purchasing DLCs, we tentatively conclude that they are more reliable than the opinions proffered, and, therefore, should be used to estimate the cost of DLCs. Although we would prefer to have a larger sampling of data, we note that the data represent the costs incurred by several of the largest non-rural carriers, as well as two of the smallest non-rural carriers. We also note that, throughout this proceeding, the Commission has repeatedly requested cost data on DLCs. We believe that we are using the best data available on the record to determine the cost of DLCs.

121. We note that ATU asserts that material handling and shipping costs should be added to the DLC prices

reflected in the contract it submitted. ATU suggests that these costs could represent up to 10 percent of the material cost of a DLC. It is unclear whether the DLC data submitted by other parties include these costs. We seek comment on the extent, if any, to which we should increase our proposed estimates for DLCs to reflect material handling and shipping costs.

122. We recognize that the cost of purchasing and installing a DLC changes over time. Such changes occur because of improvements in the methods and components used to produce DLCs, changes in both capital and labor costs, and changes in the functionality requirements of DLCs. Thus, we believe it is appropriate to adjust the contract data to reflect 1999 prices. In order to capture changes in the cost of purchasing and installing DLCs over time, we propose a 2.6 percent annual reduction in both fixed DLC cost and per line DLC cost. This proposed rate is based on the change in cost calculated for electronic digital switches over a four year period. We believe that the change in the cost of these switches over time is a reasonable proxy for changes in DLC cost, because they are both types of digital telecommunications equipment. We also note that the 2.6 percent figure is a conservative estimate, based on the change in cost of remote switches. Our analysis suggests that the change in cost of host switches over the past four years is much higher. Finally, we note that use of the current consumer price index results in a similar figure over four years. The indexed amount is based on the effective date of the contracts. Based upon an average of the contract data submitted on the record, adjusted for cost changes over time, we tentatively adopt the cost estimates for DLCs. We seek comment on this proposed analysis and the proposed values.

V. Switching and Interoffice Facilities

A. Issues for Comment

1. Switch Costs

123. We now examine the inputs associated with the purchase and installation of new switches. Specifically, we must select values for the fixed and per-line cost of host and remote switches, respectively.

124. *Switch Cost Data.* Both the sponsors of BCPM and HAI have submitted default values for switch costs. To a large extent, however, these values are based on non-public information or opinions of their experts, but without data that enable us adequately to substantiate those opinions. Consistent with the recommendation of the Joint Board and criterion eight in the *Universal Service Order,* we tentatively conclude that we should not rely on these submissions because the underlying data are not sufficiently open and available to the public. We also tentatively conclude that it is not necessary to rely on this information, because the Commission, in conjunction with the work of Gabel and Kennedy, the Bureau of Economic Analysis (BEA) of the Department of Commerce, and the U.S. Department of Agriculture Rural Utility Service (RUS), has compiled publicly available data on the cost of purchasing and installing switches. This information was gathered from depreciation reports filed by LECs at the Commission and from reports made by LECs to RUS.

125. The depreciation data contains, for each switch reported: the model designation of the switch; the year the switch was first installed; and the lines of capacity and book-value cost of purchasing and installing each switch at the time the depreciation report was filed with the Commission. The RUS data contains, for each switch reported: the switch type (i.e., host or remote); the number of equipped lines; cost at installation; and year of installation.

126. The sample that we propose to use to estimate switch costs includes 1,060 observations. The sample contains 921 observations selected from the depreciation data, which provide information on the costs of purchasing and installing switches gathered from 20 states. The sample also contains 139 observations selected from the RUS data, which provide information from across the nation on the costs of small switches purchased and installed by rural carriers. The combined sample represents purchases of both host and remote switches, with information on 468 host switches and 592 remote switches, and covers switches installed between 1989 and 1996. This set of data represents the most complete public information available to the Commission on the costs of purchasing and installing new switches.

127. In response to the *1997 Data Request,* the Commission received a second set of information pertaining to 1,486 switches. Upon analysis, however, Commission staff identified one or more problems with most of the data submitted: missing switch costs; zero or negative installation costs; zero or blank line counts; unidentifiable switches; or missing or inconsistent Common Language Local Identification (CLLI) codes. After excluding these corrupted observations, 302 observations remained. The remaining observations represented switches purchased by only four companies. We tentatively conclude that the data set we propose to use is superior to the data set obtained in response to the *1997 Data Request,* both in terms of the number of usable observations and the number of companies represented in the data set. We seek comment on this tentative conclusion.

128. Following the December 1, 1999 workshop, three companies voluntarily submitted further data regarding the cost of purchasing and installing switches. Because these submissions were received late in the process, Commission staff has not had sufficient time to analyze the quality and content of the information. We seek comment on the use of this data set as a substitute or complement to the data set we propose.

129. *Adjustments to the Data.* The cost figures reported in the depreciation information reflect the costs of purchasing and installing new switches. While the RUS cost data also contain information on purchasing and installing new switches, they do not include: (1) the cost associated with purchasing and installing the main distribution frame (MDF); (2) the cost associated with purchasing and installing power equipment; (3) the cost of connecting each remote switch to its respective host switch; and (4) LEC engineering costs. In order to make the depreciation and RUS information comparable, we propose to add estimates of these four components to the switch costs reported in the RUS information. These additions are discussed. We seek comment on this proposed approach.

130. In order to account for the cost of MDF equipment omitted from the RUS information, AT&T recommends using the HAI 5.0a default value of $12 per line for MDF. We tentatively conclude that $12 per line is a reasonable cost for purchasing and installing MDF equipment. No party contests this value. We seek comment on this tentative conclusion and invite commenters to submit alternative values.

131. In order to account for the cost of central office power equipment omitted from the RUS information, AT&T recommends using the HAI 5.0a default values for these inputs. We tentatively use the following input values for power equipment: $12,000 for switches with 0–999 lines; $40,000 for switches with 1,000–4,999 lines; and $74,500 for switches with 5,000–25,000 lines. These values are derived from a range of values on the record in this proceeding, including state cost studies. We seek comment on the values we

tentatively adopt and invite commenters to submit alternative values.

132. Gabel and Kennedy estimate that the average cost of terminating a remote on a host switch is $27,598. Relying on this estimate, we tentatively conclude that $27,598 should be added to the cost of each remote switch reported in the RUS data. We seek comment on this tentative conclusion and invite commenters to submit alternative values.

133. Gabel and Kennedy also recommend, based on a data analysis undertaken by RUS, that the cost of switches reported in the RUS data should be increased by 8 percent in order to account for the cost of LEC engineering. Relying on those estimates, we tentatively conclude that 8 percent should be added to the total cost, including MDF, power, and remote connection costs, of each switch reported in the RUS data. We note that the proposed value is based on the only information on the record on this issue. We seek comment on this tentative conclusion and invite commenters to submit alternative values.

134. We tentatively conclude that switch costs should be estimated based on a sample of public data that includes both RUS and depreciation data. As noted, this information represents the broadest range of data publicly available for both small and large switches. We seek comment on the appropriateness of merging the two data sets.

135. *Methodology.* In order to determine the reasonable forward-looking cost of switches, based on the selected data set, we propose to employ regression analysis. In the process of estimation, we propose, where appropriate, to make adjustments to the information compiled by the parties. These proposed modifications to the data and estimation techniques used by the Commission are discussed.

136. We tentatively conclude that the cost of a switch should be estimated as a linear function of the number of lines connected to the switch, the type of switch installed (i.e., host or remote), and the date of installation. We adopt a linear function based on examination of the data and statistical evidence. Sprint recommends using a non-linear function, such as the log-log function, to take into account the declining marginal cost of a switch as the number of lines connected to it increases. We tentatively conclude that the linear function we adopt provides a better fit with the data than the log-log function. A discussion of the effect of time and type of switch on switch cost is presented. We seek comment on these tentative conclusions.

137. Based upon an analysis of the data and the record, we tentatively conclude that the fixed cost (i.e., the base getting started cost of a switch, excluding costs associated with connecting lines to the switch) of host switches and remote switches differ, but the per-line variable cost (i.e., the costs associated with connecting additional lines to the switch) of host and remote switches are approximately the same. This is consistent with statistical evidence and the comments of the HAI sponsors. We seek comment on this tentative conclusion.

138. *Accounting for Changes in Cost Over Time.* We recognize that the cost of purchasing and installing switching equipment changes over time. Such changes result, for example, from improvements in the methods used to produce switching equipment, changes in both capital and labor costs, and changes in the functional requirements that switches must meet for basic dial tone service. In order to capture changes in the cost of purchasing and installing switching equipment over time, we propose to modify the data to adjust for the effects of inflation, and explicitly incorporate variables in the regression analysis that capture cost changes unique to the purchase and installation of digital switches. We describe this process.

139. To the extent that the general level of prices in the economy change over time, the purchasing power of a dollar, in terms of the volume of goods and services it can purchase, will change. In order to account for such economy-wide inflationary effects, we propose to multiply the cost of purchasing and installing each switch in the data set by the gross-domestic-product chain-type price index for 1997 and then divide by the gross-domestic-product chain-type price index for the year in which the switch was installed, thereby converting all costs to 1997 values.

140. In order to account for cost changes unique to switching equipment, we propose to enter time terms directly into the regression equation. GTE expresses concern that, under certain specifications of time, the regression equation produces investments for remote switch ''getting started'' costs that are negative and that such specifications overstate the decline in switch costs. The HAI sponsors also caution that the historical large percentage price declines seen in recent years may not continue. We tentatively conclude that the reciprocal form of time in the regression equation proposed would satisfy these concerns by yielding projections of switch purchase and installation costs that are positive yet declining over time.

141. Ameritech and GTE advocate the use of the Turner Price Index, which is an index designed to measure the changing cost of telecommunications plant, to convert the embedded cost information contained in the depreciation data to costs measured in current dollars. We note, however, that this index and the data underlying it are not on the public record. We prefer to rely on public data when available. Moreover, we tentatively conclude it is not necessary to rely on this index to convert switch costs to current dollars. As described in the preceding paragraph, the Commission has proposed to account for costs explicitly in the estimation process, rather than adopt a surrogate such as the Turner Price Index. We seek comment on this proposed approach. In addition, we seek comment on the potential impact of increased use of packet switches, including the possibility that manufacturers will reduce the price of circuit switches to maintain market share.

142. *Treatment of Switch Upgrades.* The book-value costs recorded in the depreciation data include both the cost of purchasing and installing new equipment and the cost associated with installing and purchasing subsequent upgrades to the equipment over time. Upgrades costs will be a larger fraction of reported book-value costs in instances where the book-value costs of purchasing and installing switching equipment are reported well after the initial installation date of the switch. In order to estimate the costs associated with the purchase and installation of new switches, and exclude the costs associated with upgrading switches, we propose to remove from the data set those switches installed more than three years prior to the reporting of their associated book-value costs. We believe that this restriction would eliminate switches whose book values contain a significant amount of upgrade costs, and recognizes that, when ordering new switches, carriers typically order equipment designed to meet short-run demand.

143. We tentatively conclude that we should reject the suggestion of Ameritech, GTE, and Sprint that the costs associated with purchasing and installing switching equipment upgrades should be included in our cost estimates. The model platform we adopted is intended to use the most cost-effective forward-looking technology available at a particular period of time. The installation costs of switches, as configured by us, reflect the

most cost-effective forward-looking technology for meeting industry performance requirements. Switches, augmented by upgrades, may provide carriers the ability to meet performance requirements, but do so at greater costs. Therefore, such augmented switches do not constitute cost-effective forward-looking technology. In addition, as industry performance requirements change over time, so will the costs of purchasing and installing new switches. The historical cost data employed in this proposed analysis reflect such changes over time, as do the time-trended cost estimates. We seek comment on this tentative conclusion.

144. *Additional Variables.* Several parties contend that additional independent variables should be included in our regression equation. Some of the recommended variables include minutes of use, calls, digital line connections, vertical features, and regional, state, and vendor-specific identifiers. For the purposes of this analysis, our proposed model specification is limited to include information that is in both the RUS and depreciation data sets. Neither data set includes information on minutes of use, calls, digital line connections, vertical features, or differences between host and stand-alone switches. Nor do they contain detail sufficient to allow us to obtain such information from other sources. State and regional identifiers are not included in the proposed regression because we only have depreciation data on switches from 20 states. Thus, we could not accurately estimate region-wide or state-wide differences in the cost of switching. Our proposed model specification also does not include vendor-specific variables or variables distinguishing host switches from stand-alone switches because the model platform does not distinguish between different types of switches.

145. *Switch Cost Estimates.* Using the regression analysis discussed, we tentatively adopt the fixed cost (in 1999 dollars) of a remote switch as $186,400 and the fixed cost (in 1999 dollars) of both host and stand-alone switches as $447,000. We tentatively adopt the additional cost per line (in 1999 dollars) for remote, host, and stand-alone switches as $83. We seek comment on these tentative conclusions.

2. Use of the Local Exchange Routing Guide (LERG)

146. We tentatively conclude that the Local Exchange Routing Guide (LERG) database should be used to determine host-remote switch relationships in the federal universal service mechanism. In the *1997 Further Notice,* the Commission requested ''engineering and cost data to demonstrate the most cost-effective deployment of switches in general and host-remote switching arrangements in particular.'' In the *Switching and Transport Public Notice,* the Bureau concluded that the model should permit individual switches to be identified as host, remote, or stand-alone switches. The Bureau noted that, although stand-alone switches are a standard component of networks in many areas, current deployment patterns suggest that host-remote arrangements are more cost-effective than stand-alone switches in certain cases. No party has placed on the record in this proceeding an algorithm that will determine whether a wire center should house a stand-alone, host, or remote switch.

147. In the *Platform Order,* we concluded that the federal mechanism should incorporate, with certain modifications, the HAI 5.0a switching and interoffice facilities module. In its default mode, HAI assumes a blended configuration of switch technologies to develop switching cost curves. HAI also allows the user the option of designating, in an input table, specific wire center locations that house host, remote, and stand-alone switches. When the host-remote option is selected, switching curves that correspond to host, remote, and stand-alone switches are used to determine the appropriate switching investment. The LERG database could be used as a source to identify the host-remote switch relationships. In the *Platform Order,* we stated that ''[i]n the inputs stage of this proceeding we will weigh the benefits and costs of using the LERG database to determine switch type and will consider alternative approaches by which the selected model can incorporate the efficiencies gained through the deployment of host-remote configurations.''

148. The majority of commenters support the use of the LERG database as a means of determining the deployment of host and remote switches. These commenters contend that the use of the LERG to determine host-remote relationships will incorporate the accumulated knowledge and efficiencies of many LECs and engineering experts in deploying the existing switch configurations. Commenters also contend that an algorithm that realistically predicts this deployment pattern is not feasible using publicly available data and would be ''massive and complex.'' The HAI proponents argue, however, that use of the LERG to identify host-remote relationships may reflect the use of embedded technology, pricing, and engineering practices. Although the HAI proponents oppose the use of the LERG, they have taken steps to ensure that the LERG database is compatible with use in the switching module in the synthesis model.

149. We tentatively conclude that the LERG database is the best source currently available to determine host-remote switch relationships in the federal universal service mechanism. As noted, no algorithm has been placed on the record to determine whether a wire center should house a stand-alone, host, or remote switch. In addition, a majority of commenters agree that development of such an algorithm would be difficult using publicly available data. We tentatively conclude that the use of the LERG to identify the host-remote switch relationships is superior to HAI's averaging methodology which may not, for example, accurately reflect the fact that remote switches are more likely to be located in rural rather than urban areas. We therefore tentatively agree with the BCPM proponents and other commenters that use of the LERG is the most feasible alternative currently available to incorporate the efficiencies of host-remote relationships in the federal universal service mechanism. We seek comment on these tentative conclusions. In particular, we encourage parties to comment on any alternative source or methodology that will identify host-remote switch relationships on a forward-looking basis.

3. Other Switching and Interoffice Transport Inputs

150. *General.* Several commenters assert that the depreciation studies on which the Commission relied to develop switch costs include all investments necessary to make a switch operational. These investments include telephone company engineering and installation, the main distribution frame (MDF), the protector frame (often included in the MDF), and power costs. To avoid double counting these investments, both as part of the switch and as separate input values, the model proponents agree that the MDF/Protector investment per line and power input values should be set at zero. In addition, commenters agree that the Switch Installation Multiplier should be set at 1.0. We agree that including these investments both as part of the switch cost and as separate investments would lead to double counting of these costs. We therefore tentatively conclude that the MDF/Protector investment per line and power input values should be set at zero. We further tentatively conclude that the Switch Installation Multiplier should be

set at 1.0. We seek comment on these tentative conclusions.

151. *Analog Line Offset.* We tentatively conclude that the ''Analog Line Circuit Offset for Digital Lines'' input should be set at zero. The HAI proponents contend that the switch investment in the model should be adjusted downward to reflect the cost savings associated with terminating digital, rather than analog, lines. The HAI proponents assert that this cost savings is due primarily to: (1) the elimination of a MDF and protector frame termination; and (2) the economic efficiencies of terminating multiple lines on a DS–1 trunk termination instead of individual analog line terminations. Further, HAI contends that the depreciation data on which the Commission relied in developing switch investments do not reflect adequately the cost savings that would be realized if ''60+% of lines are terminated on DLC—as occurs in the TELRIC models.'' HAI contends that the depreciation data used to determine costs reflect the use of only approximately 15 percent digital lines.

152. The HAI proponents suggest that the analog line offset input should be set to $15.00 per line to reflect additional savings in switch investment for terminating digital lines in the model. The BCPM proponents and GTE recommend setting the analog line offset to zero. Sprint contends that the analog line offset is inherent in the switching curve in the model, thus making this input unnecessary. Sprint argues that an unknown mixture of analog and digital lines are taken into consideration in developing the switch curve. GTE asserts that the analog offset must be set to zero to ''track with the switching inputs.''

153. We note that the record contains no basis on which to quantify savings beyond those taken into consideration in developing the switch cost. We also note that the depreciation data used to determine the switch costs reflect the use of digital lines. The switch investment value will therefore reflect savings associated with digital lines. We also note that HAI's proposed analog line offset of $15.00 per line is based on assumptions that are neither supported by the record nor easily verified. For example, it is not possible to determine from the depreciation data the percentage of lines that are served by digital connections. It is therefore not possible to verify HAI's estimate of the digital line usage in the ''historical'' data. In addition, HAI provides little support for its conclusion that there is a $20.00 per line cost savings using digital lines. HAI merely attributes a portion of this estimate to certain ''efficiencies'' realized from terminating digital rather than analog lines. In the absence of more explicit support of HAI's position, we tentatively conclude that the Analog Line Circuit Offset for Digital Lines should be set at zero. We seek comment on this tentative conclusion.

154. *Switch Capacity Constraints.* We tentatively adopt the HAI default switch capacity constraint inputs as proposed in the HAI 5.0a model documentation. The forward-looking cost mechanism contains switch capacity constraints based on the maximum line and traffic capabilities of the switch. The HAI proponents now recommend increasing the switch line and traffic capacity constraints above the HAI input default values for those inputs. HAI contends that the default input values no longer reflect the use of the most current technology. For example, HAI contends that the maximum equipped line size per switch should be increased from 80,000 to 100,000 lines.

155. We tentatively conclude that the original HAI switch capacity constraint default values are reasonable for use in the federal mechanism. We note that commenters have reviewed these values and are in general agreement with the HAI default values. For example, we note that the HAI and BCPM default values for maximum equipped lines per switch are identical at 80,000 lines per switch. We also note that the HAI model documentation indicates that the 80,000 line assumption was based on a conservative estimate ''recognizing that planners will not typically assume the full capacity of the switch can be used.'' The HAI proponents therefore selected the 80,000 line limitation as the maximum equipped line size value with the knowledge that the full capacity of the switch may be higher. We seek comment on our tentative conclusion.

156. *Switch Port Administrative Fill.* We tentatively adopt a switch port administrative fill factor of 94 percent. HAI defines the switch port administrative fill as ''the percent of lines in a switch that are assigned to subscribers compared to the total equipped lines in a switch.'' HAI assigns a switch port administrative fill factor of 98 percent in its default input values. The BCPM default value for the switch percent line fill is 88 percent.

157. The BCPM proponents contend that switches have significant unassigned capacity due to the fact that equipment is installed at intervals to handle one to three years' growth. BCPM most recently contends that U S WEST and BellSouth have company-wide average fills in the range of 76 percent. Sprint, on behalf of the BCPM proponents, now recommends an average fill factor of 80 percent.

158. We note that the switch port administrative fill factor of 94 percent has been adopted in several state universal service proceedings and is supported by the Georgetown Consulting Group, a consultant of BellSouth. We also note that this value falls within the range established by the HAI and BCPM default input values. The BCPM model documentation established a switch line fill default value of 88 percent that included ''allowances for growth over an engineering time horizon of several years.'' BCPM has provided no additional evidence to support its revised value of 80 percent. We therefore tentatively adopt a switch port administrative fill factor of 94 percent. We seek comment on this tentative value.

159. *Trunking.* We tentatively conclude that the switch module should be modified to disable the computation that reduces the end office investment by the difference in the interoffice trunks and the 6:1 line to trunk ratio. In addition, we tentatively adopt the HAI suggested input value of $100.00 for the trunk port investment, per end.

160. The HAI switching and interoffice module developed switching cost curves using the Northern Business Information (NBI) publication, ''U.S. Central Office Equipment Market: 1995 Database.'' These investment figures were then reduced per line to remove trunk port investment based on NBI's implicit line to trunk ratio of 6:1. The actual number of trunks per wire center is calculated in the transport calculation, and port investment for these trunks is then added back into the switching investments.

161. The BCPM proponents contend that, under the HAI trunk investment approach, raising the per-trunk investment leads to a decrease in the switch investment per line under the HAI approach, ''despite a reasonable and expected increase'' in the investment per line. The BCPM proponents argue that the trunk port input value should be set at zero to avoid producing ''contradictory'' results. GTE also notes that the selection of the trunk port input value creates a dilemma in that it is used to reduce the end office investment, as noted, and to develop a tandem switch investment. GTE recommends that the switch module be modified by disabling the computation that reduces the end office investment by the difference in the computed interoffice trunks and the 6:1 line to trunk ratio. The HAI sponsors

agree that the trunk port calculation should be deactivated in the switching module.

162. We agree with commenters that the trunk port input creates inconsistencies in reducing the end office investment. We do not, however, agree with the suggestion of the BCPM sponsors to simply set this input value at zero. As noted by GTE, this input value is also used to calculate the tandem switch investment. Consistent with the suggestions by GTE and the HAI sponsors, we tentatively conclude that the switch module should be modified to disable the computation that reduces the end office investment by the difference in the computed interoffice trunks and the 6:1 line to trunk ratio.

163. Because the trunk port input value is also used to determine the tandem switch investment, we must determine the trunk port, per end investment. The HAI input value for trunk port investment per end is $100.00. GTE and Sprint contend that this value should be much higher—ranging from $200.00 to $500.00. BellSouth notes that four states have issued orders addressing the cost of the trunk port for universal service. These states estimate the cost of the trunk port ranging from $62.73 to $110.77. We tentatively conclude that the record supports the adoption of a trunk port investment per end of $100.00, as suggested by the HAI sponsors. As noted, this value is consistent with the findings of several states and BellSouth. In addition, GTE and Sprint provide no data to support their proposed trunk port investment value. We therefore tentatively adopt the HAI suggested input value of $100.00 for the trunk port investment, per end. We seek comment on our tentative conclusions.

VI. Expenses

164. We address the inputs in the model related to expenses, including general support facilities (GSF) expenses. In light of the criteria identified in the *Universal Service Order*, the Commission intends to select inputs that will result in a reasonable allocation of joint and common costs for non-networked related costs such as GSF, plant specific and non-specific expenses, and corporate and customer operations. The Commission seeks to develop an appropriate methodology for estimating these types of expenses to ''ensure that the forward-looking economic cost [calculated by the federal mechanism] does not include an unreasonable share of the joint and common costs for non-supported services.''

A. Issues for Comment

1. Plant Specific Operations Expenses

165. We first address the inputs related to plant specific operations. Plant specific operations expenses are the expense costs related to the maintenance of specific kinds of telecommunications plant.

166. *Nationwide Estimates.* We tentatively conclude that we should adopt input values that reflect the average expenses that will be incurred by non-rural carriers, rather than a set of company-specific maintenance expense estimates. We make this tentative conclusion for a number of reasons. First, we note that this tentative conclusion is consistent with a recommendation of the state Joint Board members. Second, we have not been able to obtain current cost-to-book cost ratios for each ARMIS reporting firm, which would be necessary to calculate company or study area specific expense-to-investment ratios in the proposed methodology described. Further, we tentatively conclude that the use of national or regional averages for input factors is more consistent with the forward-looking nature of the high cost model because it mitigates the rewards to less efficient companies. We seek comment on these tentative conclusions. Parties advocating the use of company-specific values or other alternatives to nationwide or regional estimates should identify the method and data readily available to firms that would be used to estimate plant-specific expenses. Commenters should also indicate how their proposal is consistent with the goal of estimating forward-looking costs. We note that the proposed expense estimates are nationwide averages.

167. In support of the use of company-specific factors, a number of commenters and workshop participants argue that maintenance expenses vary widely by geographic area and the type of plant installed. Others contend that plant-specific expenses are highly dependent on regional wage rate differentials. At this time, we have been unable to verify significant regional differences among study areas or between companies based solely on labor rate variations using the publicly available ARMIS expense account data for plant-specific maintenance costs. Nonetheless, we believe that expenses vary by the type of plant installed. The synthesis model takes this variance into account because, as investment in a particular type of plant varies, the associated expense cost also varies. We seek comment on the degree to which regional wage rate differentials exist and are significant. We ask parties to suggest independent data sources on variations of wage rates between regions. We seek comment on a methodology that permits such distinctions without resorting to self-reported information from companies.

168. One possible approach would be to use indexes calculated by the President's Pay Agent for calculating locality pay differentials for Federal employees. Under this methodology, we would first calculate a baseline expense factor for the labor-related portion of each plant-specific expense account according to a formula which is based on the sum of an expense factor for that category by study area, a weight representing the total investment in a study area, and the regional wage differential deflator calculated in the Pay Agent's report applicable to the study area. The baseline expense would then be disaggregated to each wire center or study area using the deflator. We seek comment both on the validity of this approach as well as on the specific implementation.

169. We also tentatively conclude that we should not adopt different expense estimates for small, medium, and large non-rural companies on a per line basis. In order to determine if economies of scale should be a factor in plant-specific expenses, Commission staff tested whether significant differences in maintenance expenses per line could be discerned from segmenting companies into small carriers with less than 500,000 access lines, medium carriers with between 500,000 and 5,000,000 access lines, and those large carriers with over 5,000,000 access lines. We have found no significant differences in the expense factor per-line or per-investment estimates based on these criteria. Therefore, to estimate costs associated with an efficient network as determined by the forward-looking mechanism, we tentatively conclude that plant-specific maintenance factors should be estimated on a national basis. We seek comment on these tentative conclusions.

170. *Methodology.* Commenters advocate two methods of estimating plant specific operations expenses. The BCPM sponsors contend that all expenses should be calculated on a per-line basis. The BCPM default estimates for these accounts are based on a survey of companies. The HAI sponsors argue that expenses should be calculated as a percentage of investment. Specifically, the HAI sponsors assert that plant specific operations expenses should be calculated as a fixed percentage of investment.

171. Although we agree with the HAI sponsors that plant specific operations expenses should be estimated as a percentage of investment, we tentatively decline to adopt the flat percentages they advocate. By using ARMIS investment values that are not converted to current levels, the flat-rate method proposed by the HAI sponsors does not attempt to use forward-looking estimates. We also tentatively decline to adopt the per-line BCPM default estimates. Based on a private survey of companies, the BCPM values fail to comply with criterion eight identified in the *Universal Service Order*, because the underlying data for these values are not open to and verifiable by the public nor made available under the *Protective Order*. In contrast to the BCPM proposal, the methodology that we tentatively adopt here is primarily based on readily identifiable and publicly available ARMIS data. Although ARMIS data reflect the embedded costs incurred by incumbent LECs, we take steps in our proposed methodology to convert these costs to forward-looking estimates, as described. We note that this methodology was proposed by Commission staff in the public workshop on maintenance expenses on December 10, 1998.

172. In order to estimate forward-looking plant specific operations expenses, we have considered the requirements set forth in the *Platform Order*, and information provided in workshops, comments and *ex-partes*. We tentatively conclude that the input values for each plant specific operations expense account should be calculated as the ratio of booked expense to current investment. These expense-to-investment ratios would then be multiplied in the model by the model-derived investment for each investment account or group of accounts, to produce an estimate of the plant specific operations expenses.

173. Our proposed methodology for estimating expense to investment ratios consists of four steps. First, staff obtained from some of the ARMIS-filing companies, account-specific current cost to book cost (current-to-book) ratios for the related investment accounts. The current-to-book ratio is a tool that is used to restate the historic, financial account balance on a company's books, which reflects investment decisions made over many years, to present day replacement cost. For each account or sub-account, a current-to-book ratio is developed by first revaluing each type of equipment at its current replacement cost. The sum of these current costs are then divided by the total, embedded cost account balance. The resulting current-to-book ratio will be greater than one if current costs are rising relative to the historic costs and less than one if current costs are declining. Current-to-book ratios for the years ending 1995 and 1996 were provided by the following five holding companies: Ameritech, Bell Atlantic, Bell South, GTE, and Southwestern Bell. Although we would prefer to have data from more companies, the other ARMIS-filing carriers informed us that, they either no longer maintain this type of information, or never used current-to-book ratios for accounting purposes.

174. Second, staff calculated composite current-to-book ratios for each account. For each study area of the five holding companies that provided current-to-book ratios, we obtained year-end 1995 and 1996 investment balances from ARMIS for the plant accounts consistent with the aforementioned plant-specific expense accounts. Study area-specific current-to-book ratios for the two periods were multiplied by the 1995 and 1996 ARMIS investments in each account to derive the forward-looking, ''current,'' year-end 1995 and 1996 investment levels by account and by study area. The ARMIS and current investments were then summed separately, by year and by account, for all study areas of the five holding companies. The resulting total current investment (by year and by account for the sum of all study areas) was then divided by the total ARMIS investment (by year and by account for the sum of all study areas) producing two sets of composite current-to-book ratios (year end 1995 and 1996).

175. Third, to calculate the expense-to-investment ratios for the plant-specific operations expense accounts, staff obtained total, year-end 1995 and 1996 investment account balances from the ARMIS 43–03 reports for all ARMIS-filing companies. To make these embedded account balances forward-looking, staff next multiplied each investment account balance for each year by the current-to-book ratios for the same year developed earlier. The 1995 and 1996 ''current'' balances for each account were then averaged by adding the two years together and dividing by two.

176. Finally, from the 1996 ARMIS 43–03 report, staff obtained the 1996 balances for each plant-specific operations expense account for all ARMIS-filing companies. The expense account balances were divided by their respective average ''current'' investment to obtain expense-to-investment ratios. We tentatively conclude that these expense-to-investment ratios should be applied in the mechanism to the model-derived investment balances to obtain forward-looking plant-specific operations expense estimates. The industry-wide expense-to-investment ratios are listed. We seek comment on these proposed input values, tentative conclusions, and the proposed methodology outlined.

177. *Converting Expense Estimates to Current Values*. We recognize that plant specific expenses will change over time. Because we initially used data from 1996 in the methodology described, we tentatively conclude that it is appropriate to adjust this data to account for inflation and changes in productivity by obtaining revised 1997 current-to-book ratios from those companies providing data. In addition, we tentatively conclude that we should use the most current ARMIS data available necessary for the maintenance factor methodology. Because expense and investment balances for 1998 are not available from ARMIS at this time, we have also not been able to include them in calculating the plant-specific maintenance factors. We tentatively conclude that we should use these data in the final computation of expense estimates. We seek comment on these tentative conclusions.

178. *GSF Investment*. GSF investment includes buildings, motor vehicles, and general purpose computers. The synthesis model uses a three-step algorithm to estimate GSF for each study area. First, the model calculates a GSF investment ratio for each GSF account by dividing the ARMIS investment for the account by the ARMIS total plant in service (TPIS). Second, the model calculates a preliminary estimate GSF investment for each account by multiplying the GSF investment ratio for that account times the model's estimate of TPIS. Finally, the model reduces each of the preliminary GSF investment estimates by multiplying by one of two factors, which are the same as those used in the HAI model.

179. We tentatively conclude that the model's preliminary estimate of GSF investment should be reduced, because only a portion of GSF investment is related to the cost of providing the services supported by the federal mechanism. We also tentatively conclude that the synthesis model should not use the same factors as those used in the HAI model. The HAI sponsors, who developed the expense module in the synthesis model, have not shown why these particular factors should be used for this purpose. Instead, we tentatively conclude that total GSF investment should be reduced by factors that reflect the percentage of customer

operations, network operations, and corporate operations used to provide the supported services. We seek comment on these tentative conclusions.

2. Common Support Service Expenses

180. We next address common support service expenses, which are comprised of corporate operations, customer service expenses, and plant non-specific expenses. Corporate operations expenses are those costs associated with general administrative, executive planning, human resources, legal, and accounting expenses for total company operations. Customer service expenses include marketing, billing, operator services, directory listing, and directory assistance costs. Plant non-specific expenses are common network operations and maintenance type of expenses, including engineering, network operations, power and testing expenses, that are considered general or administrative overhead to plant operations. Commission staff held public workshops where they sought comment on various paradigms and econometric estimation techniques used to calculate these factors. Commission staff also discussed possible methods for subtracting non-recurring costs from expense estimates and for adjusting estimates for inflation and potential wage differentials.

181. *Per-Line Basis.* Common support services are costs that cannot readily be associated with any particular maintenance expense or investment account. As a result, we tentatively conclude that these expenses (unlike plant-specific expenses) should be estimated on a per-line basis, as advocated by the BCPM sponsors. We tentatively conclude that the HAI sponsors have failed to justify their proposal that expense estimates for certain accounts be based on a percentage of ARMIS-reported expenses or a percentage of total capital costs and operations expenses. We seek comment on these tentative conclusions.

182. *Nationwide Estimates.* Commenters such as Aliant, Sprint, GTE, and Bell South have argued for the inclusion of all accounts, and have argued further that these types of corporations and customer service expenses are inherently company specific in nature and should be evaluated in this manner. We tentatively conclude that inputs for corporate operations, customer services, and plant non-specific expenses should also be estimated on a nationwide basis rather than a more disaggregated basis. We seek comment on this tentative conclusion.

183. Costs associated with plant non-specific expenses used to supply and run network operations by definition cannot be directly allocated to individual maintenance or investment accounts. Commenters have suggested that these types of expenses may vary among carriers and between study areas. They argue that these differences may be a result of company specific plant configurations, geographic and labor demographic variables, one-time exogenous costs, and non-recurring adjustments such as re-engineering expenses. They further argue that administrative support expense differences are also a function of regional wage differentials and plant specifications. As stated earlier, we cannot at this time distinguish significant differences in regional wage differentials for administrative services based solely on ARMIS expense data for these accounts. Further, costs associated with corporate overhead and customer services accounts are not directly linked to specific company investment levels. We tentatively conclude that, for forward-looking cost estimates, these types of administrative and service expenses are less dependent on carrier physical plant or geographic differentials than those that also correlate to company size (number of lines) and demand (minutes of use), which were used as estimation variables to develop the model inputs. We seek further comment on this analysis.

184. We also tentatively conclude that we should not adopt different estimates for small, medium, and large high cost non-rural companies for common support service expenses. As with plant specific expenses, Commission staff tested whether statistically significant differences in common support service expenses per line could be determined from segmenting companies into small carriers with less than 500,000 access lines, medium carriers with between 500,000 and 5,000,000 access lines, and those large carriers with over 5,000,000 access lines. We have further reviewed whether expense estimates varied due to the total number of Dial Equipment Minutes (DEMs) reported by companies in addition to the number of lines. As with the plant-specific accounts, we could find no significant differences in the expense factor per-line based on these criteria. Therefore, consistent with the forward looking costs associated with an efficient network as determined by the federal mechanism, we tentatively conclude that we should estimate these non-specific network operations expenses on a nationwide, per-line basis. We seek comment on this tentative conclusion.

185. *Data Source.* Following standard economic analysis and forecasting methods, we propose to use publicly available 1996 ARMIS expense data and minutes of use information from NECA, by study area, to estimate the portion of these company-wide expenses to be covered by universal service support. We believe that consolidation of this data produces a sufficient number of observations by study area for each of these accounts. Public data for 1996 was used in this analysis in order to compare the estimates obtained with proprietary information received from a previous data request. We note that this methodology was proposed by Commission staff in a public workshop on December 1, 1998. We seek comment on this proposal.

186. *Regression Methodology.* Using standard multi-variate regression analysis, we developed two different specifications to determine the portion of corporate and customer operations and plant non-specific expenses subject to universal service support. Each equation estimates total expenses per total lines as a function of switched lines per total lines, special lines per total lines, and toll minutes per total lines, either in combination (Specification 1) or separated between intrastate toll and interstate toll minutes per total lines (Specification 2).

187. Each specification has been chosen to separate the portion of expenses that could be estimated as attributable to special access lines and toll usage, which are not supported by the high cost mechanism, rather than switched lines and local usage. Commission staff found from an earlier formulation that, when the model included both a switched line component and a local usage component, the number of switched lines and local DEMs were so highly correlated that it did not increase the explanatory power of the model to include both variables. As a result, we tentatively conclude that we should not include local dial equipment minutes per total lines as an explanatory variable, despite suggestions by a number of workshop participants and commenters. Because both regression equations produce reasonable estimates, and in order to prevent any potential advantage to firms which might have a different mix of toll minutes, we propose to use the average of the estimates from the two specifications. We seek further comment on this proposed regression methodology.

188. *Removal of One-Time and Non-Supported Expenses.* In order to

eliminate the impact of one-time non-recurring expenses on forward-looking estimates, we have sought verifiable public information on exogenous costs and those that are recovered through non-recurring charges and tariffs. These include specific one time charges for the cost of mergers, acquisitions, and process re-engineering. We also sought to estimate the cost of providing permanent number portability, network and interexchange carrier connection, disconnection, and re-connection (i.e., churn) costs. Other recurring functions that we have attempted to identify include vertical features expenses, billing and collection expense not related to supported services, operational support systems and other expenses associated with providing unbundled network elements and wholesale services to competitive local exchange carriers, collocation expenses, and costs associated with SS7 services.

189. Without obtaining proprietary information from carriers, we have been unable to find an objective public data source or discern a systematic method for excluding many of these costs from the expense data used to calculate the input factors. AT&T and MCI WorldCom presented an analysis to Commission staff on January 14, 1999, proposing a method to estimate, non-supported, non-recurring, or one-time expenses for customer, network, and corporate operations expenses. Averaging data for five years (1993–1997) of corporate Security and Exchange Commission (SEC) 10–K and 10–Q filings, a percentage of corporate and network operations identified as one-time charges were estimated for the BOCs and all Tier One companies. Because the SEC reports do not specifically indicate whether the one-time expenses were actually made during the year(s) indicated, we tentatively conclude that we should not use these figures to adjust the 1996 ARMIS data used in estimating the expense input values. The analysis does indicate, however, that one-time expenses for corporate operations can be significant and should be estimated, if possible. Because this type of data detail is not publicly available from ARMIS or easily reconcilable from other public company financial reports to individual account expenses for a specific year, we invite comment on how to identify and estimate these expenses.

190. We tentatively conclude that, if it is determined that expense estimates to be used as inputs in the high-cost mechanism are to be revised annually, as suggested by various parties, one-time non-recurring costs should be systematically excluded. We further recommend that, to the extent possible, efforts be made to use current information supplied and verified by the companies, if none can be found independently, to more accurately reflect forward-looking expenses. We seek comment on this tentative conclusion and recommendation.

191. *Removal of Non-Supported Expenses.* Cost reductions were made for continuous non-supportable services which could be identified and estimated from publicly available (ARMIS) expense data. Expense adjustments were made to calculated input values for marketing expenses. Though the HAI sponsors and state Joint Board members suggested that marketing expenses be excluded entirely, commenters and workshop participants noted that Section 214 of the Communications Act requires eligible telecommunications carriers to advertise the availability of residential local exchange and universal service supported services.

192. We tentatively conclude that an analysis made by Economics and Technology, Inc., regarding the disaggregation of marketing and advertising expenses made by companies for basic telephone service, is the most accurate method on the record for apportioning marketing expenses between supported and non-supported services. This analysis attributes an average of 95.6 percent of company marketing costs to non-supported customers or activities, such as vertical and new services. We seek comment on this proposed analysis for estimating marketing expenses.

193. We also propose adjustments for non-supported service costs related to coin operations and collection, published directory, access billing, interexchange carrier office operation, and service order processing, which are associated with specific expense accounts used in the regression analysis. Under this methodology, percentage reductions would be made to the estimated coefficients for those accounts using calculations based on a time trend analysis of average ARMIS 43–04 expense data for five years (1993–1997). We seek comment on this proposed methodology.

194. *Converting Expenses to 1999 Values.* In order to bring forward the 1996 data relied upon for estimating common support service expenses, we propose to use a 6.0 percent productivity factor for each year (1997 and 1998) to reduce the estimated input values for each account. The 6.0 percent productivity factor is based on the 6.5 percent ''X-factor'' used in the Commission's price cap methodology. We note that the D.C. Circuit Court of Appeals recently reversed and remanded for further explanation the Commission's decision to select 6.0 percent as the first component of the X-factor. In light of that remand, we seek comment on whether we should continue to adjust our expense input values to reflect productivity gains. If we determine that such adjustment is appropriate, we may want to use an alternative method of estimating productivity. We seek comment on what other measures we could use to adjust our expense data for gains in productivity. We further propose to add an inflation factor for each year based on the fixed weighted Gross Domestic Product Price Index (GDP-PI) for 1997 (2.1120 percent) and for 1998 (2.1429 percent). Thus, we propose a net reduction of 3.888 percent for 1997 and 3.8571 percent for 1998 when using the 6.0 percent productivity factor. We seek comment on this method for converting expenses to 1999 values.

195. *Estimates of Corporate Operations, Customer Operations, and Plant Non-Specific Expenses.* This Further Notice contains a summary of the proposed per-line, per-month input figures for both plant non-specific expenses, corporate operations, and customer operations adjusted expenses as calculated using the aforementioned methodology. We seek comment on these proposed values.

VII. Capital Costs

196. We address the inputs in the model related to capital costs: depreciation, cost of capital, and annual charge factors.

A. Depreciation

1. Issues for Comment

a. Method of Depreciation.

197. Before selecting values for projected life and future net salvage value, we first tentatively adopt the method of depreciation that should be used in the model, that is, how depreciation allowances should be allocated over the life of an asset. The Commission's depreciation accounting rules require carriers to use straight-line equal-life group depreciation. Both the HAI and BCPM proponents advocate the use of straight-line depreciation in calculating depreciation expenses. Ameritech suggests that the depreciation method used for a specific geographic area should be consistent with any studies that underlie the development of economic lives or net salvage values for that same area. GTE proposes that incumbent LECs be allowed to use depreciation lives based on the expected economic life of the asset. Because the Commission's rules require the use of straight-line

depreciation, rather than a more accelerated depreciation method, we tentatively conclude that this method, which is used for all Commission-proposed depreciation, is also appropriate for use in the high cost support mechanism. We seek comment on this tentative conclusion.

b. Depreciation Lives and Future Net Salvage Percentages.

198. In estimating depreciation expenses, the model uses the projected lives and future net salvage percentages for the asset accounts in Part 32 of the Commission's rules. Traditionally, the projected lives and future net salvage values used in setting a carrier's rates have been determined in a triennial review process involving the state commission, the Commission, and the carrier. In order to simplify this process, the Commission has prescribed ranges of acceptable values for projected lives and future net salvage percentages. The Commission's prescribed ranges reflect the weighted average asset life for regulated telecommunications providers. These ranges are treated as safe harbors, such that carriers that incorporate values within the ranges into their depreciation filings will not be challenged by the Commission. Carriers that submit life and salvage values outside of the prescribed range must justify their submissions with additional documentation and support. Commission authorized depreciation lives are not only estimates of the physical lives of assets, but also reflect the impact of technological obsolescence and forecasts of equipment replacement. We believe that this process of combining statistical analysis of historical information with forecasts of equipment replacement generates forward-looking projected lives that are reasonable estimates of economic lives and, therefore, are appropriate measures of depreciation.

199. In the *1997 Further Notice*, the Commission tentatively concluded that it should adopt depreciation expenses that reflect a weighted average of the rates authorized for carriers that are required to submit their rates to us. The values submitted by the HAI sponsors essentially reflect such a weighted average. The HAI values represent the weighted average depreciation lives and net salvage percentages from 76 study areas. According to the HAI sponsors, these depreciation lives and salvage values reflect the experience of the incumbent LEC in each of these study areas in retiring plant, and its projected plans for future retirements.

200. We tentatively conclude that HAI's values represent the best forward-looking estimates of depreciation lives and net salvage percentages. We seek comment on this tentative conclusion. Generally, these values fall within the ranges prescribed by the Commission for projected lives and net salvage percentages. Although the HAI values for four account categories fall outside of the Commission's prescribed ranges, these values still reflect the weighted average of projected lives and net salvage percentages that were approved by the Commission and therefore are consistent with the approach proposed in the *1997 Further Notice*. As noted, the fact that an approved value falls outside of the prescribed range simply means that the carrier that proposed the value was required to provide additional justification to the Commission for this value. We are satisfied that HAI calculated its proposed rates using the proper underlying depreciation factors and that HAI's documentation supports the selection of these values.

201. We disagree with the BCPM sponsors and other incumbent LECs that the Commission's prescribed ranges are not appropriate for determining depreciation rates in a competitive environment. These parties argue that rapid changes in technology and the opening of local telecommunications markets to competition shorten asset lives significantly beyond what the Commission has prescribed. The BCPM sponsors claim that these factors cause existing equipment to become obsolete at a faster pace, thus reducing the overall economic value of the assets more quickly. We agree with the HAI sponsors that there is no evidence to support the claim that increased competition or advances in technology require the use of shorter depreciation lives in the model than are currently prescribed by the Commission. The Commission's prescribed lives are not based solely on the engineered life of an asset, but also consider the impacts of technological change and obsolescence. We note that the depreciation values we tentatively adopt are generally at the lower end of the prescribed range. We further note that although the average depreciation rate for an incumbent LEC's Total Plant in Service is approximately seven percent, incumbent LECs are retiring plant at a four percent rate. This difference has allowed depreciation reserves to increase so that the depreciation reserve-ratio is greater than 50 percent. We tentatively conclude that the existence of this difference implies that the prescribed lives are shorter than the engineered lives of these assets. In addition, this difference provides a buffer against technological change and competitive risk for the immediate future. We therefore tentatively conclude that the Commission's prescribed ranges are appropriate to determine depreciation rates for the model. We seek comment on these tentative conclusions.

202. We tentatively decline to adopt the values for projected lives and net salvage percentages submitted by the BCPM proponents. The BCPM proponents based their default values for projected lives and salvage on a LEC industry data survey requesting forward-looking values. With regard to projected lives, the BCPM values generally fall outside of the Commission's prescribed ranges. Because the BCPM sponsors fail to introduce sufficient evidence supporting their values, we tentatively decline to accept their approach. The BCPM proponents submitted values for projected life that are significantly shorter than the already shortened Commission's prescribed life ranges. This is significant because BCPM's values that fall outside of the prescribed ranges represent accounts that reflect the overwhelming majority of plant investment, thus potentially triggering a dramatic increase in support. We seek comment on this assessment.

B. Cost of Capital

203. The cost of capital represents the annual percentage rate of return that a company's debtholders and equity holders require as compensation for providing the debt and equity capital that a company uses to finance its assets. In the *Universal Service Order*, the Commission concluded that the current federal rate of return of 11.25 percent is a reasonable rate of return by which to determine forward-looking costs.

204. The HAI proponents have submitted data indicating that the incumbent LEC's cost of capital is 10.01 percent, not the current 11.25 percent federal rate of return. The HAI proponents also contend that certain state commissions have determined that even lower costs of capital are appropriate. The BCPM proponents advocate a cost of capital rate of 11.36 percent.

205. We find that both BCPM and HAI proponents have failed to make an adequate showing to justify rates that differ from the current 11.25 percent federal rate of return. We tentatively conclude, therefore, that the current rate is reasonable for determining the cost of universal service. If the Commission, in a rate represcription order, adopts a different rate of return, we tentatively

conclude the model should use the more recently determined rate of return. We seek comment on these tentative conclusions.

C. Annual Charge Factors

206. Incumbent LECs develop cost factors, called ''annual charge factors,'' to determine the dollar amount of recurring costs associated with acquiring and using particular pieces of investment for a period of one year. Incumbent LECs develop these annual charge factors for each category of investment required. The annual charge factor is the sum of depreciation, cost of capital, adjustments to include taxes on equity, and maintenance costs.

207. To develop annual charge factors, the BCPM proponents propose a model with user-adjustable inputs to calculate the depreciation and cost of capital rates for each account. The BCPM proponents state that this account-by-account process was designed to recognize that all of the major accounts have, *inter alia,* differing economic lives and salvage values that lead to distinct capital costs. HAI's model is also user adjustable and reflects the sum for the three inputs: depreciation, cost of capital, and maintenance costs.

208. Because the synthesis model uses HAI's expense module, with modifications, we tentatively conclude that HAI's annual charge factor should be used. We believe that HAI's annual charge factor is consistent with other inputs used in the model adopted by the Commission, and therefore easier to implement. We seek comment on this analysis and our tentative decision to use HAI's annual charge factor.

VIII. Other Issues Related to the High Cost Mechanism

A. Alternatives to the Forward-Looking Cost Model

209. It is our expectation that the model outputs will be fully verified in time for implementation on January 1, 2000, and we remain firmly committed to the idea that support based on forward-looking costs will provide the best assurance of predictable, specific, and sufficient support as competition develops. In the unlikely event that the model is not ready for timely implementation, however, we seek comment on how the Commission might determine support levels without resort to a forward-looking cost model. Commenters addressing this issue should specifically describe how their proposal will generate sufficient support to meet the goals of section 254, even as competition develops in the local exchange.

B. Proposed Modification to Procedures for Distinguishing Rural and Non-Rural Companies

1. Issues for Comment

210. On June 22, 1998, the Accounting Policy Division released a Public Notice with a list of the approximately 1,400 carriers that had certified as rural carriers as of April 30, 1998. Because a vast majority of the carriers certifying as rural serve under 100,000 access lines, we tentatively conclude that we should adopt new filing requirements for carriers filing rural self-certification letters. We propose that carriers who serve under 100,000 access lines should not have to file the annual rural certification letter unless their status has changed since their last filing. We believe that this is a better approach because the overwhelming majority of the companies that filed rural certification letters qualified as rural telephone companies because they provide service to fewer access lines than either the 50,000 or 100,000 line thresholds identified in the statute. Access line counts can be verified easily with publicly-available data. Further, this relaxation in filing requirements would lessen the burden on many rural carriers and Commission staff. We estimate that this change will eliminate the filing requirement for approximately 1,380 of the carriers that filed this year. We seek comment on this proposal.

211. As noted, the Commission can easily determine whether a carrier satisfies criteria (B) or (C) of the rural telephone company definition, because these criteria are based on information that can be verified easily with publicly available data—the number of access lines served by a carrier. In contrast, criteria (A) and (D) require additional information and analysis to verify a carrier's self-certification as a rural company. Specifically, under criterion (A) a carrier is rural if its study area does not include ''any incorporated place of 10,000 inhabitants or more'' or ''any territory * * * in an urbanized area,'' based upon Census Bureau statistics and definitions. Under criterion (D) a carrier is rural if it had ''less than 15 percent of its access lines in communities of more than 50,000 on the date of enactment of the [1996 Act].''

212. We tentatively conclude that, once we have clarified the meaning of ''local exchange operating entity'' and ''communities of more than 50,000'' in section 153(37), we should require carriers with more than 100,000 access lines that seek rural status to file certifications for the period beginning January 1, 2000, consistent with the Commission's interpretation of the rural telephone company definition. We seek comment on this tentative conclusion. We also seek comment on whether we should require these carriers to re-certify each year (after the filing for January 1, 2000) or, in the alternative, whether they should be required to re-certify only if their status has changed.

213. Most of the carriers asserting rural status under criterion (A) or (D) also claim rural status under the access line thresholds in criterion (B) or (C). In these cases, the Commission does not need additional information to verify the carrier's rural status. If a carrier serves a local exchange study area with more than 100,000 access lines, however, the Commission needs additional information about the study area to determine whether criterion (A) or (D) is met. Based on the certifications we have received, we believe that carriers have adopted differing interpretations of criterion D. We tentatively conclude that criterion A, on the other hand, by referencing Census Bureau sources, can be applied consistently without further interpretation by the Commission. We seek comment on this tentative conclusion.

214. We have identified at least two issues in the rural telephone company definition for which carriers have adopted different interpretations that affect the determination of whether a carrier satisfies the requirements of criterion D. Specifically, carriers differ on whether criterion (D) should be applied on a holding company or study area-by-study area basis. For example, while most carriers have asserted that they meet the 15 percent/50,000 test in criterion (D) for a particular study area because less than 15 percent of its access lines within that study area are in communities of more than 50,000, at least one carrier claims it meets this criterion for all of its study areas, because less than 15 percent of its access lines nationwide are in such communities. In order to resolve these differences, we must interpret the phrase ''local exchange operating entity'' in the introductory text of section 153(37).

215. We therefore seek comment on how we should interpret the phrase ''local exchange operating entity'' in section 153(37) of the Communications Act. Specifically, we seek comment on whether that term refers to an entity operating at the study area level or at the holding company level. Although most of the carriers certifying under

subparagraph (D) have construed the term to refer to an entity at the study area level, we note that at least one state commission, in denying a carrier's request for an exemption under section 251(f)(1) of the Communications Act, viewed the exemption claim from the perspective of the national operating entity. We also request information on how states have construed the rural telephone company definition in exercising their authority under section 251(f)(1) and section 214(e)(2) of the Act.

216. Carriers also have used different interpretations of the phrase ''communities of more than 50,000'' in criteria (D) of the rural telephone company definition. Some carriers have used Census Bureau statistics for legally incorporated localities, consolidated cities, and census-designated places, to identify communities of more than 50,000. Other carriers have provided lists of communities without identifying the source of the designation or the population information. Some carriers have attempted to distinguish between rural communities and communities that may be characterized as urban or suburban. One carrier, for example, based its analysis of its service territories on the Commission's definition of ''rural area'' in section 54.5 of the Commission's rules. The carrier calculated its percentage of rural/non-rural lines by determining whether each of its wire centers is associated with a metropolitan statistical area (MSA). If so, these lines were considered to be urban, unless the wire center has rural pockets, as defined by the most recent Goldsmith Modification.

217. We seek comment on how we should interpret the phrase ''communities of more than 50,000'' in section 153(37) of the Act. We seek comment on whether we should define communities of more than 50,000 by using Census Bureau statistics for legally incorporated localities, consolidated cities, and census-designated places. In the alternative, we seek comment on whether we should distinguish between rural and non-rural communities in applying criterion D of section 153(37). Specifically, we seek comment on whether we should use the methodology in section 54.5 of the Commission's rules to determine whether a community is in a rural area. We also seek comment on other methods of defining communities with populations greater than 50,000 for purposes of applying criterion D.

218. As noted, states apply the definition of rural telephone company in determining whether a rural telephone company is entitled to an exemption under section 251(f)(1) of the Act and in determining, under section 214(e)(2) of the Act, whether to designate more than one carrier as an eligible telecommunications carrier in an area served by a rural telephone company. Although the Commission used the rural telephone company definition to distinguish between rural and non-rural carriers for purposes of calculating universal service support, there is no statutory requirement that it do so. The Commission adopted the Joint Board's recommendation to allow rural carriers to receive support based on embedded cost for at least three years, because, as compared to large LECs, rural carriers generally serve fewer subscribers, serve more sparsely populated areas, and do not generally benefit as much from economies of scale and scope. The Commission also noted that for many rural carriers, universal service support provides a large share of the carriers' revenues, and thus, any sudden change in the support mechanisms may disproportionately affect rural carriers' operations. We seek comment on whether the Commission should reconsider its decision to use the rural telephone company definition to distinguish between rural and non-rural carriers for purposes of calculating universal service support. That is, we seek comment on whether there are differences between our universal service policies and the competitive policies underlying sections 251(f)(1) and 214(e)(2) that would justify definitions of ''rural telephone company'' and ''rural carrier'' that differ.

219. Finally, we address a necessary procedural matter. Currently, carriers are required to file rural certifications by July 1, 1999 to be classified as rural for January 1, 2000. Given our tentative conclusions that we should modify the current filing requirements for rural certification, including eliminating the filing requirement for most carriers that have filed previously, we move the July 1, 1999 filing deadline to October 15, 1999.

IX. Procedural Matters and Ordering Clause

A. Ex Parte Presentations

220. This is a permit-but-disclose notice-and-comment rulemaking proceeding. *Ex parte* presentations are permitted, except during the Sunshine Agenda period, provided that they are disclosed as provided in Commission's rules.

B. Initial Regulatory Flexibility Act

221. As required by the Regulatory Flexibility Act (RFA), the Commission has prepared this Initial Regulatory Flexibility Analysis (IRFA) of the possible significant economic impact on small entities by the proposals in this Further Notice. Written public comments are requested on the IRFA. These comments must be filed in accordance with the same filing deadlines as comments on the rest of this Further Notice, and should have a separate and distinct heading designating them as responses to the IRFA. The Commission will send a copy of this Further Notice, including the IRFA, to the Chief Counsel for Advocacy of the Small Business Administration (SBA) in accordance with the RFA. In addition, the Further Notice and IRFA (or summaries thereof) will be published in the **Federal Register**.

222. *Need for and Objectives of Proposed Rules.* In the *Universal Service Order,* the Commission adopted a plan for universal service support for rural, insular, and high cost areas to replace longstanding federal subsidies to incumbent local telephone companies with explicit, competitively neutral federal universal service mechanisms. In doing so, the Commission adopted the recommendation of the Joint Board that an eligible carrier's support should be based upon the forward-looking economic cost of constructing and operating the networks facilities and functions used to provide the services supported by the federal universal service mechanism.

223. Our plan to adopt a mechanism to estimate forward-looking cost has proceeded in two stages. On October 28, 1998, the Commission completed the first stage of this proceeding: the selection of the model platform. The platform encompasses the aspects of the model that are essentially fixed, primarily assumptions about the design of the network and network engineering. In this Further Notice we move toward completion of the second stage of this proceeding, by proposing input values for the cost model, such as the cost of cables, switches and other network components, in addition to various capital cost parameters. In addition, we propose adoption of a road surrogate algorithm to determine the location of customers and a data set of customer locations. This Further Notice also seeks comment on other issues related to the federal high cost mechanism, including alternatives to the forward-looking cost model and modifications to the procedures for distinguishing rural and non-rural companies.

224. *Legal Basis:* The proposed action is supported by sections 4(i), 4(j), 201–205, 254, and 403 of the Communications Act of 1934, as amended, 47 U.S.C. 154(i), 154(j), 201–205, 254, and 403.

225. *Description and Estimate of the Number of Small Entities to which the Further Notice will Apply.*

226. The RFA generally defines ''small entity'' as having the same meaning as the term ''small business,'' ''small organization,'' and ''small government jurisdiction.'' In addition, the term ''small business'' has the same meaning as the term ''small business concern'' under the Small Business Act, unless the Commission has developed one or more definitions that are appropriate to its activities. Under the Small Business Act, a ''small business concern'' is one that: (1) is independently owned and operated; (2) is not dominant in its field of operation; and (3) meets any additional criteria established by the SBA. The SBA has defined a small business for Standard Industrial Classification (SIC) category 4813 (Telephone Communications Except Radiotelephone) to be small entities when they have no more than 1,500 employees.

227. The most reliable source of information regarding the total number of certain common carriers appears to be data the Commission publishes annually in its *Carrier Locator* report, derived from filings made in connection with the Telecommunications Relay Service (TRS).

228. Although some affected incumbent LECs may have 1,500 or fewer employees, we do not believe that such entities should be considered small entities within the meaning of the RFA because they are either dominant in their field of operations or are not independently owned and operated, and therefore by definition not ''small entities'' or ''small business concerns'' under the RFA. Accordingly, our use of the terms, ''small entities'' and ''small businesses'' does not encompass incumbent LECs. Out of an abundance of caution, however, for regulatory flexibility analysis purposes, we will separately consider small incumbent LECs within this analysis and use the term ''small incumbent LECs'' to refer to any incumbent LEC that arguably might be defined by the SBA as ''small business concerns.''

229. *Local Exchange Carriers.* Neither the Commission nor SBA has developed a definition of small local exchange carriers. The closest applicable definition for these carrier-types under SBA rules is for telephone communications companies other than radiotelephone (wireless) companies. The most reliable source of information regarding the number of these carriers nationwide of which we are aware appears to be data that we collect annually in connection with the TRS. According to our most recent data, there are 1,410 LECs. Although it seems certain that some of these carriers are not independently owned and operated, or have more than 1,500 employees, we are unable at this time to estimate with greater precision the number of these carriers that would qualify as small business concerns under SBA's definition. Consequently, we estimate that there are fewer than 1,410 small entity LECs that may be affected by the proposals adopted in this Further Notice. We also note that, with the exception of a modification in reporting requirements, the proposals in this Further Notice apply only to larger ''non-rural'' LECs.

230. *Description of Projected Reporting, Recordkeeping, and Other Compliance Requirements.*

231. On June 22, 1998, the Accounting Policy Division released a Public Notice with a list of the approximately 1,400 carriers that had certified as rural carriers as of April 30, 1998. Because a vast majority of the carriers certifying as rural serve under 100,000 access lines, we tentatively conclude that we should adopt new filing requirements for carriers filing rural self-certification letters. We propose that carriers who serve under 100,000 access lines should not have to file the annual rural certification letter unless their status has changed since their last filing. We believe that this is a better approach because the overwhelming majority of the companies that filed rural certification letters qualified as rural telephone companies because they provide service to fewer access lines than either the 50,000 or 100,000 line thresholds identified in the statute. Access line counts can be verified easily with publicly-available data. Further, this relaxation in filing requirements would lessen the burden on many rural carriers and Commission staff. We estimate that this change will eliminate the filing requirement for approximately 1,380 of the carriers that filed this year.

232. We tentatively conclude that, once we have clarified the meaning of ''local exchange operating entity'' and ''communities of more than 50,000'' in section 153(37), we should require carriers with more than 100,000 access lines that seek rural status to file certifications for the period beginning January 1, 2000, consistent with the Commission's interpretation of the rural telephone company definition. We also seek comment on whether we should require these carriers to re-certify each year (after the filing for January 1, 2000) or, in the alternative, whether they should be required to re-certify only if their status has changed.

233. In addition, we address a necessary procedural matter. Currently, carriers are required to file rural certifications by July 1, 1999 to be classified as rural for January 1, 2000. Given our tentative conclusions that we should modify the current filing requirements for rural certification, including eliminating the filing requirement for most carriers that have filed previously, we propose moving the July 1, 1999 filing deadline to October 15, 1999.

234. *Steps Taken to Minimize Significant Economic Impact on Small Entities and Significant Alternatives Considered.* Throughout the Further Notice, we seek comment on the tentative conclusions that we propose. In addition, we believe that the reporting modifications that are proposed will reduce the burden on rural LECs. As noted, we propose that carriers serving fewer access lines than either the 50,000 or 100,000 line thresholds should not be required to file annual rural certification letters unless their status has changed since their last filing.

235. *Federal Rules That May Overlap, Duplicate or Conflict with the Proposed Rule.* None.

C. Initial Paperwork Reduction Act Analysis

236. This Further Notice contains a proposed information collection. As part of its continuing effort to reduce paperwork burdens, we invite the general public and the Office of Management and Budget (OMB) to take this opportunity to comment on the information collections contained in this Further Notice, as required by the Paperwork Reduction Act of 1995, Public Law No. 104–13. Public and agency comments are due at the same time as other comments on this Further Notice; OMB comments are due 60 days from date of publication of this Further Notice in the **Federal Register**. Comments should address: (a) whether the proposed collection of information is necessary for the proper performance of the functions of the Commission, including whether the information shall have practical utility; (b) the accuracy of the Commission's burden estimates; (c) ways to enhance the quality, utility, and clarity of the information collected; and (d) ways to minimize the burden of the collection of information on the

respondents, including the use of automated collection techniques or other form of information technology.

D. Deadlines and Instructions for Filing Comments

237. Pursuant to 47 CFR 1.415, 1.419, interested parties may file comments on or before July 2, 1999 and reply comments on or before July 16, 1999. Comments may be filed using the Commission's Electronic Comment Filing System (ECFS) or by filing paper copies. *See Electronic Filing of Documents in Rulemaking Proceedings,* 63 Fed. Reg. 24,121 (1998).

238. Comments filed through the ECFS can be sent as an electronic file via the Internet to <http://www.fcc.gov/e-file/ecfs.html>. Generally, only one copy of an electronic submission must be filed. If multiple docket or rulemaking numbers appear in the caption of this proceeding, however, commenters must transmit one electronic copy of the comments to each docket or rulemaking number referenced in the caption. In completing the transmittal screen, commenters should include their full name, Postal Service mailing address, and the applicable docket or rulemaking number. Parties may also submit an electronic comment by Internet e-mail. To get filing instructions for e-mail comments, commenters should send an e-mail to ecfs@fcc.gov, and should include the following words in the body of the message, ''get form <your e-mail address.'' A sample form and directions will be sent in reply. Parties who choose to file by paper must file an original and four copies of each filing. If more than one docket or rulemaking number appear in the caption of this proceeding, commenters must submit two additional copies for each additional docket or rulemaking number. All filings must be sent to the Commission's Secretary, Magalie Roman Salas, Office of the Secretary, Federal Communications Commission, 445 Twelfth Street, S.W., TW–A325, Washington, D.C. 20554.

239. Parties must also send three paper copies of their filing to Sheryl Todd, Accounting Policy Division, 445 Twelfth Street S.W., 5–A523, Washington, D.C. 20554. In addition, commenters must send diskette copies to the Commission's copy contractor, International Transcription Service, Inc., 1231 20th Street, N.W., Washington, D.C. 20037.

E. Ordering Clauses

240. *It is ordered,* pursuant to sections 1, 4(i) and (j), 201–209, 218–222, 254, and 403 of the Communications Act, as amended, 47 U.S.C. 151, 154(i), 154(j), 201–209, 218–222, 254, and 403 that this Further Notice of Proposed Rulemaking is hereby adopted and comments are requested as described.

241. *It is further ordered* That the Commission's Office of Public Affairs, Reference Operations Division, shall send a copy of this Further Notice of Proposed Rulemaking, including the Regulatory Flexibility Analysis, to the Chief Counsel for Advocacy of the Small Business Administration.

List of Subjects

47 CFR Part 36

Reporting and recordkeeping requirements, Telephone.

47 CFR Part 54

Universal service.

47 CFR Part 69

Communications common carrier.

Federal Communications Commission

Magalie Roman Salas,

Secretary.

[FR Doc. 99–15025 Filed 6–11–99; 8:45 am]

BILLING CODE 6712–01–U

DEPARTMENT OF COMMERCE

National Oceanic and Atmospheric Administration

50 CFR Part 216

[Docket No. 990324081–9081–01; I.D. 072098G]

RIN 0648–AI85

Taking of Marine Mammals Incidental to Commercial Fishing Operations; Tuna Purse Seine Vessels in the Eastern Tropical Pacific Ocean (ETP)

AGENCY: National Marine Fisheries Service (NMFS), National Oceanic and Atmospheric Administration (NOAA), Department of Commerce.

ACTION: Proposed rule; request for comments and notice of public hearings.

SUMMARY: NMFS proposes regulations to implement provisions of the International Dolphin Conservation Program Act (IDCPA). These regulations would allow the entry of yellowfin tuna into the United States under certain conditions from nations signatory to the International Dolphin Conservation Program (IDCP) that otherwise would be under embargo. It would also allow U.S. fishing vessels to participate in the fishery in the ETP on equivalent terms with the flag vessels of other IDCP signatory nations. A U.S. citizen employed on a purse seine vessel of another IDCP signatory nation with an affirmative finding would not be in violation of U.S. prohibitions on the taking of marine mammals if that vessel takes marine mammals incidentally during fishing operations outside the U.S. exclusive economic zone (EEZ) in compliance with the requirements of the IDCP. The standard for use of ''dolphin-safe'' labels for tuna products would also change. General requirements also are proposed to ensure adequate tracking and verification of tuna imports from the ETP.

DATES: Comments on the proposed regulations must be received on or before July 14, 1999. Public hearings on this proposed rule will be held on Thursday, July 8, 1999, in Long Beach, CA, at 10:00 a.m.- 1:00 p.m. and on Wednesday, July 14, 1999, in Silver Spring, MD, at 1:00 p.m.- 4:00 p.m.

ADDRESSES: Send comments to J. Allison Routt, NMFS, Southwest Region, Protected Resources Division, 501 W. Ocean Blvd., Suite 4200, Long Beach, CA 90802–4213. The locations of the public hearings on this proposed rule are: (1) Room 3400, 501 W. Ocean Blvd., Long Beach, CA 90802–4213; and (2) NOAA Building, SSMC IV, Room 1W611, 1305 East-West Highway, Silver Spring, MD 20910.

FOR FURTHER INFORMATION CONTACT: J. Allison Routt, NMFS, Southwest Region, Protected Resources Division, (562) 980–4020. For additional information about the public hearing in Long Beach, CA, contact J. Allison Routt. For additional information about the public hearing in Silver Spring, MD, contact Cathy Eisele, NMFS, Headquarters, Marine Mammal Division,(301) 713–2322.

SUPPLEMENTARY INFORMATION:

Background

In 1992, nations fishing for tuna in the ETP, including the United States, reached a non-binding international agreement (referred to as the La Jolla Agreement) that included, among other measures, a dolphin mortality reduction schedule providing for significant reductions in dolphin mortalities. By 1995, nations fishing in the ETP under the La Jolla Agreement had reduced dolphin mortality to less than 5,000 dolphins annually, two years ahead of the schedule established in that Agreement. In October 1995, the success of the La Jolla Agreement led the United States, Belize, Colombia, Costa Rica, Ecuador, France, Honduras, Mexico, Panama, Spain, Vanuatu, and Venezuela to sign the Panama Declaration to strengthen and enhance the IDCP.

The program outlined in the Panama Declaration will provide greater

protection for dolphins, and enhance the conservation of yellowfin tuna and other living marine resources in the ETP ecosystem. The Panama Declaration anticipated that the United States would change the provisions of the Marine Mammal Protection Act (MMPA) to allow import of yellowfin tuna into the United States from nations that are participating in, and are in compliance with, the IDCP. Implementation of the Panama Declaration by the United States was also anticipated in order to allow U.S. vessels to participate in the ETP fishery on an equal basis with the vessels of other nations. Under the Declaration, signatory nations agreed to develop a legally binding, international agreement. In May 1998, eight nations, including the United States, signed such a binding, international agreement to implement the IDCP. This Agreement will go into force after either ratification, acceptance, or approval by four nations.

The IDCPA was signed into law on August 15, 1997, to recognize and implement the IDCP and to address related issues. The IDCPA was the domestic endorsement of an international management regime adopted during the last 20 years under the auspices of the Inter-American Tropical Tuna Commission (IATTC). The IDCPA primarily amends provisions in the MMPA governing marine mammal mortality in the U.S. ETP tuna purse seine fishery and the importation of yellowfin tuna and yellowfin tuna products from other nations with vessels engaged in the ETP tuna purse seine fishery. Key provisions of the IDCPA will become effective when two certifications are made. The Secretary of State must certify to Congress that a binding legal instrument establishing the IDCP has been adopted and is in force (i.e., Agreement on the IDCP). In addition, the Secretary of Commerce must certify that a study has commenced on the effects of intentional encirclement (including chase) on dolphins and dolphin stocks incidentally taken in the course of purse seine fishing for yellowfin tuna in the ETP, and that funds are available to complete the first year of this study. On July 27, 1998, the Secretary of Commerce provided the required certification to Congress on the research study.

The Agreement on the IDCP becomes effective when four countries have deposited their instruments of either ratification, acceptance, or adherence with the United States. The United States, Panama, Ecuador, and Mexico have deposited their instruments of either ratification, acceptance, or adherence with the Depositary. The Agreement on the IDCP became effective on February 15, 1999. On March 3, 1999, the Secretary of State provided the required certification to Congress that the Agreement on the IDCP has been adopted and is in force. The IDCPA became effective on this date. Provisions to implement the IDCPA and the new international agreement for dolphin conservation in the ETP are the subject of these proposed regulations.

Section 7 of the IDCPA amends the Tuna Conventions Act regarding a General Advisory Committee and a Scientific Advisory Committee, and provisions are proposed to address these changes. Section 6(c) of the IDCPA amends the permit sanction provisions in the MMPA applicable to permits issued to U.S. purse seine vessels in the ETP and their operators, and these changes will be addressed in a separate rulemaking.

Definitions

Definitions are added for ''Administrator, Southwest Region,'' ''Agreement on the International Dolphin Conservation Program,'' ''Declaration of Panama,'' ''Force majeure,'' ''International Dolphin Conservation Program,'' ''International Dolphin Conservation Program Act,'' ''International Review Panel,'' and ''Per-stock per-year dolphin mortality limit.'' In addition, the definitions of ''ABI,'' ''Director, Southwest Region,'' ''ETP Fishing Area 1,'' '' ETP Fishing Area 2,'' ''ETP Fishing Area 3,'' ''Fishing season,'' ''Kill-per-set,'' ''Kill-per-ton,'' and ''Purse seine set on common dolphins'' are removed because they are no longer necessary.

Although the Agreement on the IDCP applies in the Pacific Ocean west only to 150° W. meridian, the current definition of ETP is out to 160° W. meridian. This definition is not proposed to be changed because the existing definition is set by the Dolphin Protection Consumer Information Act (DPCIA) (16 U.S.C. 1305). This difference is expected to only affect a relatively small number of trips by U.S. purse seine vessels, when they extend their fishing activities under the Treaty that governs their fishing in the South Pacific into waters that overlap with the waters covered by the Agreement on the IDCP. This overlap will require these vessels to comply with the dolphin-safe requirements of the MMPA applicable to the ETP for fishing in the overlap area west of 150° W. meridian even though the Agreement on the IDCP has determined that fishing on dolphins does not occur in this area.

Requirements for U.S. Vessels

The certificate of inclusion process for U.S. vessel owners and operators under a general permit issued to the American Tunaboat Association would be replaced with a system of issuing permits directly to vessel owners and operators. Two permit categories would be retained for tuna purse seine vessels of greater than 400 short tons (362.8 metric tons (mt)) carrying capacity. One category would apply to purse seining involving the intentional taking of marine mammals, and the other category would apply to purse seining not involving the intentional taking of marine mammals. As mandated by the IDCPA, the latter category of permits would not require that the vessel be equipped with special equipment or gear. The terms and conditions for both categories of permits would be modified to require that observers be carried on every trip. Existing dolphin stock and species prohibitions would be replaced with a provision prohibiting sets on a stock when the mortality limit for that stock has been reached or exceeded. The authorization to take marine mammals during a set to protect catch or gear would be eliminated, retaining only the authorization to take marine mammals if necessary during a set to prevent personal injury. The authorizations proposed for elimination are no longer justified based upon the experience of the U.S. fleet and the low levels of dolphin mortality allowed under the IDCP.

The operator performance requirements are proposed to be removed and a subsection reserved for this subject. Because U.S. vessels have not been making intentional sets on dolphins in recent years, the existing performance requirements based upon older data do not reflect improvements in performance that should be expected from the U.S. operators based upon the performance of the international fleet in recent years. A subsection for operator performance requirements would be reserved to implement operator performance requirements when they are developed under the IDCP. Even without the performance requirements in effect now, the dolphin mortality limit (DML) system provides an effective incentive to both vessel owners and operators to achieve low dolphin mortalities, as demonstrated by the results since 1992. The implementation of operator performance standards under the IDCP is the best way to prevent substandard operators from moving among the vessels of various nations.

Implementing a provision in the Agreement on the IDCP, purse seine vessels of 400 st (362.8 mt) or less carrying capacity would be prohibited from intentionally deploying a net on or encircling dolphins. The U.S. vessels that are in this size range have not been obtaining certificates of inclusion to intentionally set on dolphins, so this new provision is not anticipated to affect the operations of any U.S. vessels.

The DML provisions are proposed to be revised to incorporate changes arising from the Agreement on the IDCP. These revisions include the following: adding a procedure for vessels that normally do not fish in the ETP to apply for a DML; removing the 15–percent limitation on adjusting DMLs as allocated by the IDCP; incorporating the DML re-allocation criteria in Annex IV of the Agreement on the IDCP; and reducing the allocation for a DML for the second half of a year to one-third of a full-year DML instead of the one-half of a full-year allocation previously provided.

The regulations would preclude a vessel that fails in two consecutive years to make at least one intentional set on dolphins by April 1 from obtaining a DML in the subsequent year. Similarly, a vessel with a second-semester DML that fails to make at least one intentional set on dolphins by December 31 of that year, or a vessel with a per-trip DML that fails to make at least one intentional set on dolphins during that trip, would lose its DML. After two consecutive losses of its DML, a vessel would not be eligible to receive a DML for the following year. Exceptions might be granted for *force majeure* or extraordinary circumstances.

The observers' access to certain vessel equipment and the working needs of observers on U.S. vessels would be elaborated upon in conformity with the Agreement on the IDCP.

The sections on permits for ''Stationary gear,'' ''Other gear,'' and ''Commercial passenger fishing vessels'' would be removed because the take of marine mammals incidental to these fisheries is now regulated by 50 CFR part 229.

Imports of Yellowfin Tuna and Yellowfin Tuna Products

The existing § 216.24(e) on imports would be revised for clarity, and would be redesignated as § 216.24(f). The observer provisions would be redesignated from § 216.24(f) to § 216.24(e) so that they would immediately follow the other sections applicable to U.S. vessels.

Harmonized Tariff Schedule (HTS) Numbers

Reflecting changes in the U.S. HTS, the list of HTS numbers in newly designated § 216.24(f)(2) would be updated.

All shipments, regardless of port of entry, identified by an HTS number in § 216.24, must be accompanied by a Fisheries Certificate of Origin (FCO). Unfortunately, the existing regulations are incorrect and appear to apply the MMPA § 101(a)(2) tuna embargo to encompass all shipments covered by these HTS numbers. Actually, the MMPA tuna embargos (for primary nations) cover only yellowfin tuna harvested by purse seines in the ETP. For instance, a shipment of skipjack harvested by longline may require an FCO because the importer has identified it with one of the HTS numbers listed under § 216.24(e). Such a shipment would not be subject to the MMPA embargo.

A provision would be added stating that no tuna or tuna products may be imported into the United States, even if there is an affirmative finding in place, if these tuna or tuna products were banned from importation under the MMPA before the effective date of section 4 of the IDCPA. The scope of the intermediary nation embargo on ETP yellowfin tuna and tuna products would be made the same as the scope of the embargo that applies to harvesting nations, conforming the regulations to changes made in the MMPA since the existing regulations were last changed. Dates related to tuna caught in large-scale driftnet fisheries, which are no longer relevant, would be removed.

Affirmative Findings

Yellowfin tuna or yellowfin tuna products imported from the ETP tuna purse seine fishery must meet the new standards established by the IDCPA. The finding section of the regulations, which would be redesignated as § 216.24(f)(9), would be revised to conform to the new standards and requirements of the IDCPA. No harvesting nation could export yellowfin tuna harvested by purse seine in the ETP into the United States unless the nation provided NMFS documentary evidence that it (1) participates in the IDCP; (2) is a member or applicant member of, and meeting the financial obligations of membership in, the IATTC; (3) keeps its fleet's stock-specific dolphin mortality within the IDCP's prescribed limits; and (4) keeps its fleet's annual dolphin mortality within the aggregate DMLs assigned to the fleet. The former two items are explicit in the IDCPA. The third item does not have much relevance until the IDCP nations allocate per-stock mortality limits between nations. The fourth item is NMFS' proposed interpretation of ambiguous statutory language in § 101(a)(2)(B)(iii) of the MMPA as revised by the IDCPA:

> ...the total dolphin mortality limits * * * permitted for that nation's vessels under the [IDCP] do not exceed the limits determined for 1997, or for any year thereafter ...

NMFS considered, but rejected, three alternative interpretations of § 101(a)(2)(B)(iii) of the MMPA: (1) the aggregate of the DMLs assigned to each of the harvesting nation's vessels (''fleet DML'') for the upcoming year could not exceed the nation's fleet DML in 1997 or subsequent years; (2) the overall, international dolphin mortality cap set by the IDCP for the upcoming year could not exceed the cap in 1997 [i.e., 7,500 dolphins] or subsequent years [e.g., 6,500 dolphins in 1998]; and (3) the DML assigned to each vessel in the international fishery could never exceed the limit assigned in 1997 [i.e., 94 dolphins/vessel] or subsequent years [e.g., 66 dolphins/vessel in 1998, and 39.68 dolphins/vessel in 1999].

The first rejected alternative conforms best with the wording of § 101(a)(2)(B)(iii): ''the total dolphin mortality limits ...for that nation's vessels...do not exceed the limits determined for 1997, or for any year thereafter * * *.'' However, comparing a nation's aggregate (fleet) mortality limits to the nation's earlier limits would prejudge decisions under the IDCP. In the Panama Declaration, the United States pledged to lift embargoes against nations participating in accordance with the international program. While the international program intended to reduce overall dolphin mortality, the parties to the Panama Declaration and the IDCP did not contemplate limiting the size of any nation's fleet (at least not for the purpose of dolphin protection) or the size of any nation's aggregate DML. The IDCP has always allocated the annual international cap on a per-vessel basis, not on a per-nation basis. Under this rejected alternative, a nation could fish in strict compliance with the program but be embargoed by the United States if its fleet happened to be relatively large in the upcoming year and therefore receive a relatively large aggregate (fleet) DML. Penalizing a nation whose fleet has grown could discourage efficient utilization of resources (fishing vessels transferring between nations) without affecting overall international dolphin mortality. Harvesting nations that adopted good

dolphin conservation programs because of the IDCP might quit the IDCP if subjected to this type of embargo.

The second alternative interpretation was rejected because the statutory placement of an item relating to international management would not be logical or appropriate among a list of standards applicable to individual harvesting nations. While each IATTC participant could block a larger international cap (because the IATTC operates by consensus), imposing trade restrictions to penalize fellow harvesting nations would not be logical for the following reasons. First, the United States also participates in the IDCP, which operates by consensus. Therefore, this standard would only have significance (and result in an embargo) if the United States itself approved raising the international cap. In the statutory context, Congress certainly intended these importation standards to induce compliance with the IDCP by harvesting nations. Second, this is not the type of documentary evidence that the United States would require an individual harvesting nation to provide since the United States knows the international cap by virtue of our participation in the IDCP.

The third rejected alternative is not logical for the same reasons as the second alternative; vessel DMLs are set by consensus, so the United States could unilaterally prevent this standard from being violated; and since we participate in the IDCP also, the United States need not rely upon documentary evidence from harvesting nations.

The proposed interpretation makes the most sense in the context of § 101(a)(2)(B) of the MMPA because it focuses on a nation's compliance with the international regime. Only a nation that failed to keep its own fleet's annual dolphin mortality within the aggregate DMLs assigned to the fleet would be embargoed. That is the type of documentary evidence that the United States would not necessarily have without a submission from the harvesting nation. In the embargo context, this interpretation focuses NMFS' attention on a fleet's results in protecting dolphin, which should reflect on the success of the harvesting nation's management and enforcement program, rather than decisions by other parties to the IDCP. This encourages other harvesting nations to comply with the IDCP and threatens economic sanctions only against nations that do not control or manage their own fleets.

Although currently the IDCP does not assign per-stock dolphin mortality limits to individual nations, fleets, or vessels, if the IDCP assigns per-stock limits in the future, we would compare the total per-stock dolphin mortality of a harvesting nation's fleet in a calendar year to the combined allocated annual per-stock mortality limits assigned to the fleet for that year. If the mortality exceeded the assigned limits, the United States would impose an ETP embargo against that nation for the subsequent April through March period.

While the existing concept of nations applying for and renewing annual affirmative findings is retained, the proposed regulations reflect the reality that the documentary evidence used to make findings may be provided by a combination of the exporting nation, the harvesting nation (if different from the exporting nation), and the IDCP and IATTC. In addition, to reflect the fact that the IDCP principally uses the calendar year as the basis for management, including the calculation and monitoring of annual DMLs, the period of validity of a finding in the regulations is proposed to be from April 1 through March 31 of the following year, relying upon data from the previous calendar year. To work effectively within this schedule, NMFS will reduce the processing time for complete applications from 120 days to 60 days. NMFS is considering a multi-year affirmative finding process and is seeking comments on this concept.

Dolphin-safe Requirements

As mandated by section 6(d) of the IDCPA, the proposed regulations would exclude yellowfin tuna and yellowfin tuna products harvested by vessels of a nation which is in compliance with the IDCP, and which also has met the IATTC application and membership requirements specified in the IDCPA, from the prohibition on the sale, purchase, offer for sale, transport or shipment of tuna products in the United States which is not dolphin-safe.

Observers

The language in redesignated § 216.24(e)(1) would be revised to clarify that all permitted vessels are required to carry observers on every trip. In addition, the section providing for an application and waiver process regarding women observers is removed because the time period has expired for its use.

U.S. Citizens on Foreign Flag Vessels in the ETP

A U.S. citizen employed on a foreign tuna purse seine vessel of a nation with an affirmative finding would not be subject to the MMPA's prohibitions on taking marine mammals while the vessel is engaged in fishing operations outside the U.S. EEZ. Use of an affirmative finding determination for this purpose is the most effective way for a U.S. citizen to determine that a nation is qualified under the IDCPA's criteria.

Dolphin-safe Labeling Requirements

The labeling standard for use of the term ''dolphin-safe'' on the labels of tuna products would change under the proposed regulation. Currently, tuna products may be labeled ''dolphin-safe'' only if no intentional setting on dolphins occurred during the fishing trip. Under the IDCPA, the Secretary of Commerce (Secretary) would revise the labeling standard based upon the initial and final findings of a study mandated by the IDCPA on whether the intentional deployment on, or encirclement of, dolphins with purse seine nets is having a ''significant adverse impact'' on any depleted dolphin stock in the ETP. Dolphin stocks in the ETP now designated as depleted under the MMPA are the eastern spinner dolphin, northeastern offshore spotted dolphin, and the coastal spotted dolphin. The initial finding is due between March 1, 1999, and March 31, 1999, and the final finding is due between July 1, 2001, and December 31, 2002. Under the proposed regulations, a ''default standard'' will be established before the Secretary makes an initial finding. Under the default standard, tuna products can only be labeled ''dolphin-safe'' if no dolphins are intentionally encircled during the entire fishing trip *and* no dolphin is killed or seriously injured during the set. After the initial finding, unless the Secretary *initially* finds a ''significant adverse impact,'' the Assistant Administrator will apply the definition of ''dolphin-safe'' specified in paragraph (h)(1) of the Dolphin Consumer Protection Information Act (DCPIA)(16 U.S.C. 1385(h)(1)), i.e., that no dolphins were killed or seriously injured during the sets in which the tuna were caught. Similarly, if the Secretary's *final* finding by December 31, 2002, concludes that a significant adverse impact is either not occurring or has not been detected, the definition of ''dolphin-safe'' under paragraph (h)(1) of the DCPIA will apply. Alternatively, if the Secretary finds a ''significant adverse impact,'' the definition would revert to the default standard. The proposed regulations provide that, by notification in the **Federal Register**, the Assistant Administrator will implement any required change in the labeling standard without additional rulemaking.

Sundown Sets

Under a 1988 amendment to the MMPA (Pub. L. 100–711), the backdown procedure must be completed no later than one-half hour *after* sundown. Moreover, the La Jolla Agreement and the IDCP both specified that this procedure must be completed no later than one-half hour *after* sundown. In contrast, apparently due to a typographical error, section 303(a)(2)(B)(5) of the IDCPA states that backdown procedures must be completed no later than one-half hour *before* sundown. No Congressional reports or colloquy indicate that this ''revision'' was adopted purposefully. Furthermore, under the May 1998 Agreement on the IDCP, signatory nations agreed that the backdown procedure must be completed no later than one-half hour *after* sundown. Since the purpose of the May 1998 Agreement on the IDCP is to implement the IDCP, NMFS proposes that requiring the backdown procedure to be completed no later than one-half hour *after* sundown, best represents the language of the May 1998 Agreement on the IDCP and the spirit of the IDCP. Therefore, the proposed rule requires the backdown procedure be completed no later than one-half hour after sundown for every set encircling dolphin.

Official Mark

The DPCIA, as revised by the IDCPA, requires the Secretary to develop an official mark that can be used to indicate a tuna product is ''dolphin-safe.'' The Secretary is considering designating a commonly used ''dolphin-safe'' logo as the official mark and will make this designation in a later rulemaking. In the meantime, this rule would only ''reserve'' 50 CFR 216.96 as the section of the regulations that NMFS will use in the future to describe the official mark.

The DPCIA does not mandate the use of the official mark, or prohibit the use of a mark or label other than the official mark that suggests processed tuna is ''dolphin-safe'' (''alternative mark''). Although the DPCIA does not prohibit the use of alternative marks, paragraphs (d)(3)(C)(i)-(iii) of the DPCIA appear to establish standards applicable only to processed tuna labeled with alternative marks or labels that refer to marine mammals. Those apparently separate standards are (1) no dolphins were killed or seriously injured in the sets or other gear deployments in which the tuna were caught; (2) the mark is supported by a tracking and verification program comparable in effectiveness to the program established by NMFS regulations; and (3) the mark comports with applicable laws and regulations of the Federal Trade Commission.

Upon analysis, DPCIA paragraph (d)(3)(C) does not require a separate set of standards in these regulations. First, the labeling standards in paragraphs (d)(1) and (2) of the DPCIA apply to all processed tuna whether labeled with the official mark or with an alternative mark. Second, the DPCIA paragraphs (d)(3)(C)(i) and (iii) standards applicable to processed tuna labeled with alternative marks are either less stringent or identical to the standards that apply to processed tuna labeled with the official mark. Third, the standard described in DPCIA paragraph (d)(3)(C)(ii) would only be applicable if an alternative mark were supported by an alternative tracking and verification program. Instead of determining whether alternative tracking and verification programs meet the NMFS standards, NMFS proposes to require that anyone who imports, exports, or sells tuna in the United States that was harvested in the ETP comply with the tracking and verification program described in this rule. In other words, an alternative mark would be required to be supported by the official tracking and verification program. Therefore, NMFS need not determine that an alternative program is ''comparable in effectiveness'' to the official program. While nothing in these regulations is intended to inhibit a company or group from establishing an alternative tracking and verification program, such a program would not be a substitute for the program described here.

Therefore, NMFS proposes to establish a single standard for the use of labels on tuna product that refers to a marine mammal or suggests that the processed tuna was harvested by a method not injurious to dolphin. That standard would be the same, regardless of whether the label was the official mark that will be promulgated by the Secretary or an alternative mark.

Tracking and Verification

Paragraph (f) of the DPCIA (16 U.S.C. 1385(f)), as revised by the IDCPA, requires the Secretary to issue regulations for a domestic program to track and verify tuna labeled ''dolphin-safe.'' At the same time as NMFS is developing a U.S. domestic program, parties to the May 1998 Agreement on the IDCP are working together to develop an international tracking and verification system for tuna landed by purse seine vessels fishing in the ETP. Section 216.94 of the proposed regulations is intended to implement paragraph (f) of the DPCIA, while, to the greatest extent practicable, keeping the domestic program in line with the still-developing international program.

The proposed domestic tracking and verification program provides for effective tracking of tuna harvested from the ETP by U.S. and foreign vessels. The proposed program would track tuna caught by U.S. purse seine vessels in the ETP from capture, to well, to processing, to final sale, while noting which tuna was ''dolphin-safe'' and which tuna was ''non-dolphin-safe.''

The fishing vessel observer will designate each well into which tuna is loaded as either ''dolphin-safe,'' ''non-dolphin-safe,'' or ''mixed.'' The vast majority of wells are expected to be either ''dolphin-safe'' or ''non-dolphin-safe.'' ''Mixed'' wells should be a rare occurrence. Under the interim labeling standard, the fishing vessel observer will designate a well ''non-dolphin-safe'' if any tuna loaded into the well was harvested (1) on a trip in which purse seines were intentionally set on dolphin, or (2) in a set in which any dolphin died or was seriously injured. The observer will designate a well as ''dolphin-safe'' if all the tuna loaded into the well was harvested during a trip without intentional sets on dolphins and during sets in which dolphins were intentionally encircled but no mortality or serious injury of dolphin was observed. If the labeling standard changes after March 1999, the observer would designate a well ''non-dolphin-safe'' if tuna is loaded into the well that was harvested during a set in which a dolphin died or was seriously injured. Conversely, the observer would designate a well ''dolphin-safe'' if all tuna loaded into that well was harvested during sets in which no dolphin died or was seriously injured.

Regardless of which labeling standard is in effect, if a ''dolphin-safe'' well, containing some amount of ''dolphin-safe'' tuna, is later loaded with tuna caught in a set in which a dead or seriously injured dolphin was discovered late in the loading process, that well would then be designated ''mixed.'' The observer will record the estimated weight of the ''dolphin-safe'' tuna already in the well. The tuna already in the well will retain its status as ''dolphin-safe'' tuna even though ''non-dolphin-safe'' tuna is stored in the same well. Subsequently, only ''non-dolphin-safe'' tuna could be loaded into that well.

At least 48 hours before a scheduled arrival in port, including ports outside the United States, U.S. purse seine vessels would be required to report to NMFS the scheduled place and time of arrival. The purpose of this report

would be to give NMFS an opportunity to send a representative to meet the vessel and verify the contents of the wells and the ''dolphin-safe'' status of the tuna. The Captain would be required to submit a written report of each set made during the fishing trip to NMFS detailing the weights by species composition, estimated tons loaded, the dates of loading into the well, the ''dolphin-safe'' ''non-dolphin-safe'' or ''mixed'' designation of each well, set number, the trip number, the observer name, the captain name, the vessel name, and the trip dates.

Likewise, when tuna harvested in the ETP is scheduled to be delivered to a tuna canning company, the company would be required to provide 48–hour advance notice to NMFS of the location and arrival time of such shipment.

After unloading from the fishing vessel and throughout processing, ''dolphin-safe'' and ''non-dolphin-safe'' tuna would be strictly segregated. Can codes (that is, the unique number pressed onto each can of processed tuna) could be used to trace the tuna to a particular fishing trip by a particular vessel and, indirectly, to a particular well on the vessel. Fishing companies, importers, and canners would all be required to maintain relevant FCO and other records of the tuna for three years. NMFS would have the authority to request copies of relevant documents for inspection and could conduct audits and spot-checks of facilities.

In these tracking and verification regulations and the Environmental Assessment analyzing this program, NMFS has addressed each subsection of section (f) of the DPCIA, as follows: (1) Weight calculations of the amount of ''dolphin-safe'' and ''non-dolphin-safe'' tuna loaded into segregated wells after each set will be a required part of observers' reporting on forms to be revised by the IATTC in accordance with the international tracking and verification program. Tuna processors will use weight calculations to report ''dolphin-safe'' and ''non-dolphin-safe'' tuna received for immediate processing or cold storage and also for tuna being removed from cold storage for sale or processing; (2) the U.S. observer program has not been used in this fishery for years so these regulations do not propose changes to our domestic program, but the parties to the IDCP are working to improve the training, monitoring, and reporting components of the existing IATTC and other national observer programs; (3) the observer reports would indicate the ''dolphin-safe'' or ''non-dolphin-safe'' status of each well aboard the fishing vessel; however, NMFS is not proposing to require wells be ''sealed'' because sealing wells effectively is not practicable and furtively moving significant quantities of frozen blocks of large tuna from well to well during a trip is very unlikely; (4) tracking and storage of radio and facsimile communications from vessels would not be useful to track or verify tuna products, but NMFS proposes to mandate the creation or maintenance of such records if the industry keeps the records anyway (for its own purposes); (5) shore-based verification coupled with IATTC records and other reports required by these regulations form the backbone of the proposed tracking and verification program; (6) as indicated in proposed § 216.94, NMFS would conduct periodic spot-checks and audits of tuna facilities; (7) negotiations with other ETP harvesting nations are expected to result in a cooperative, international tracking program under which participating nations will share data and inspect fish processing facilities under mutually agreeable protocols.

Public Comments Solicited; Public Hearings

NMFS is soliciting comments on this proposed rule. Oral comments, as well as written comments, may be presented at public hearings on the proposed rule (see **ADDRESSES** and **DATES**). Written comments on the proposed rule may also be submitted to J. Allison Routt (see **ADDRESSES** and **DATES**).

Special Accommodations

These hearings will be physically accessible to people with disabilities. Requests for sign language interpretation or other aids should be directed to J. Allison Routt at least 10 days prior to the hearing date (see **ADDRESSES**).

Classification

Executive Order 12866

Pursuant to the procedures established to implement section 6 of E.O. 12866, the Office of Management and Budget (OMB) has determined that this rule is significant.

Regulatory Flexibility Act

The Assistant General Counsel for Legislation and Regulation of the Department of Commerce certified to the Chief Counsel for Advocacy of the Small Business Administration that this proposed rule, if adopted, would not have a significant economic impact on a substantial number of small entities. There are 15 to 17 small vessels in the U.S. purse seine fleet that fish most years; these have 363 mt or less carrying capacity. These vessels are small business entities generating less than $3 million in gross revenues each year from all landings. The only action in the proposed rule specifically intended to restrict small vessels is the formal prohibition of setting on dolphin. However, these vessels have not set on dolphin in the past. There would be no substantial compliance costs or paperwork burdens imposed on small vessels. Finally, while the proposed actions may result in increased supply of raw tuna to U.S. and foreign processors, it is not expected to result in lower prices being paid to fishing vessels, regardless of their size. With respect to the U.S. processing sector, there are no small processing firms. With respect to the wholesale and broker sectors, there are no known small U.S. firms involved in these sectors handling ETP-origin tuna or tuna products. Even if there were small entities involved in the business of brokering or wholesaling, they would be affected only minimally by recordkeeping requirements associated with tracking ''dolphin-safe'' tuna product. None of the other actions in this proposed rule would impose any costs nor affect revenues of such businesses.

Paperwork Reduction Act

Notwithstanding any other provision of the law, no person is required to respond to, nor will any person be subject to a penalty for failure to comply with, a collection of information subject to the requirements of the PRA, unless that collection of information displays a currently valid OMB control number.

This proposed rule contains collection-of-information requirements subject to the Paperwork Reduction Act (PRA). One existing requirement is repeated: exporters from all countries importing tuna and tuna products, except some fresh products, into the United States must provide information about the shipment to U.S. Customs using the Fisheries Certificates of Origin (NOAA Form 370). Approved by the OMB under control number 0648–0335, the public reporting burden for this collection is estimated to average 20 minutes per submission.

This proposed rule also contains new collection-of-information requirements which have been submitted to OMB for review and approval. The estimated burden for these requirements are as follows: 30 minutes for an application for a vessel permit; 10 minutes for an application for an operator permit; 30 minutes for a request for a waiver to transit the ETP without a permit; 10 minutes for a notification by a vessel

permit holder 5 days prior to departure on a fishing trip; 10 minutes for the requirement that vessel permit holders who intend to make intentional sets on marine mammals must notify NMFS at least 48 hours in advance if there is a vessel operator change or within 72 hours if the change was made due to an emergency; 10 minutes for a notification by a vessel permit holder of any net modification at least 5 days prior to departure of the vessel; 15 minutes for a request for a DML; 20 hours for an experimental fishing operation waiver; 10 minutes for a notification by a captain; managing owner; or vessel agent 48 hours prior to arrival to unload; 1 hour for a captain to complete the tuna tracking form; 5 minutes for a captain to complete the dolphin-safe certification; 10 minutes for a notification by a cannery 24 hours prior to receiving a shipment of domestic or imported ETP caught tuna; 10 minutes for a cannery to provide the processor's receiving report; 10 minutes for a cannery to provide the processor's storage removal report; 1 hour for a cannery to provide the monthly cannery receipt report; 30 minutes for an exporter; transshipper; importer; or processor to produce records if requested by the Administrator, Southwest Region.

The preceding public reporting burden estimates for collections of information include time for reviewing instructions, searching existing data sources, gathering and maintaining the data needed, and completing and reviewing the collection of information.

Public comment is sought regarding whether this proposed collection of information is necessary for the proper performance of the functions of the agency, including whether the information will have practical utility; the accuracy of the burden estimate; ways to enhance the quality, utility; and clarity of the information to be collected; and ways to minimize the burden of the collection of information, including through the use of automated collection techniques or other forms of information technology. Send comments on these or any other aspects of the collection of information to the Administrator, Southwest Region at the address above, and to OMB at the Office of Information and Regulatory Affairs, Office of Management and Budget, Washington, D.C. 20503 (Attention: NOAA Desk Officer).

List of Subjects in 50 CFR Part 216

Exports, Fish, Imports, Marine mammals, Penalties, Reporting and recordkeeping requirements, Transportation.

Dated: June 8, 1999.

Penelope D. Dalton,

Assistant Administrator for Fisheries, National Marine Fisheries Services.

For the reasons set out in the preamble, 50 CFR part 216 is proposed to be amended as follows:

PART 216–REGULATIONS GOVERNING THE TAKING AND IMPORTING OF MARINE MAMMALS

1. The authority citation for part 216 continues to read as follows:

Authority: 16 U.S.C. 1361 *et seq.*, unless otherwise noted.

2. In § 216.3, definitions of ''ABI'', ''Director, Southwest Region'', ''ETP Fishing Area 1'', ''ETP Fishing Area 2'', ''ETP Fishing Area 3'', ''Fishing season'', ''Kill-per-set'', ''Kill-per-ton'', and ''Purse seine set on common dolphins'' are removed, and definitions for ''Administrator, Southwest Region'', ''Agreement on the International Dolphin Conservation Program'', ''Declaration of Panama'', ''Force majeure'', ''International Dolphin Conservation Program'', ''International Dolphin Conservation Program Act'', ''International Review Panel'', and ''Per-stock per-year dolphin mortality limit'' are added in alphabetical order to read as follows:

§ 216.3 Definitions.

* * * * *

Administrator, Southwest Region means the Regional Administrator, Southwest Region, National Marine Fisheries Service, 501 W. Ocean Blvd., Suite 4200, Long Beach, CA 90802–4213, or his or her designee.

Agreement on the International Dolphin Conservation Program (Agreement on the IDCP) means the Agreement establishing the formal binding IDCP that was signed in Washington, DC on May 21, 1998.

* * * * *

Declaration of Panama means the declaration signed in Panama City, Republic of Panama, on October 4, 1995.

* * * * *

Force majeure means forces outside the vessel operator's or vessel owner's control that could not be avoided by the exercise of due care.

* * * * *

International Dolphin Conservation Program (IDCP) means the international program established by the agreement signed in La Jolla, California, in June 1992, as formalized, modified, and enhanced in accordance with the Declaration of Panama and the Agreement on the IDCP.

International Dolphin Conservation Program Act (IDCPA) means Public Law 105–42, enacted into law on August 15, 1997.

International Review Panel (IRP) means the International Review Panel established by the Agreement on the IDCP.

* * * * *

Per-stock per-year dolphin mortality limit means the maximum allowable number of incidental dolphin mortalities and serious injuries from a specified stock per calendar year, as established under the IDCP.

* * * * *

3. In § 216.24, the introductory Note to § 216.24 and paragraphs (e)(9), (f)(4), and (f)(7) are removed; paragraphs (e) and (f) are redesignated as paragraphs (f) and (e) respectively; newly designated paragraphs (e)(5) and (e)(6) are redesignated as paragraphs (e)(4) and (e)(5) respectively; newly designated paragraphs (f)(6) and (f)(8) are redesignated as paragraphs (f)(10) and (f)(11) respectively; and the section heading, paragraphs (a)(1), (a)(2)(i), (a)(2)(ii), (a)(3), (b) through (d), newly designated paragraphs (e)(1) through (e)(3), (f)(2), (f)(3) through (f)(5), and paragraph (g) are revised; and paragraphs (f)(6) through (f)(9), and (f)(12) are added to read as follows:

§ 216.24 Taking and related acts incidental to commercial fishing operations by tuna purse seine vessels in the eastern tropical Pacific Ocean.

(a)(1) No marine mammal may be taken in the course of a commercial fishing operation by a United States purse seine fishing vessel in the ETP unless the taking constitutes an incidental catch as defined in § 216.3, and vessel and operator permits have been obtained in accordance with these regulations, and such taking is not in violation of such permits or regulations.

(2)(i) It is unlawful for any person using a United States purse seine fishing vessel of 400 short tons (st) (362.8 metric tons (mt)) carrying capacity or less intentionally to deploy a net on or to encircle dolphins, or to carry more than two speedboats, if any part of its fishing trip is in the ETP.

(ii) It is unlawful for any person using a United States purse seine fishing vessel of greater than 400 short tons (362.8 mt) carrying capacity that does not have a valid permit obtained under these regulations to catch, possess, or land tuna if any part of the vessel's fishing trip is in the ETP.

* * * * *

(3) Upon written request made in advance of entering the ETP, the limitations in paragraphs (a)(2)(i) and (a)(2)(ii) of this section may be waived by the Administrator, Southwest

Region, for the purpose of allowing transit through the ETP. The waiver will provide, in writing, the terms and conditions under which the vessel must operate, including a requirement to report by radio to the Administrator, Southwest Region, the vessel's date of exit from or subsequent entry into the permit area, in order to transit the area with more than two speedboats.

(b) *Permits*—(1) *Vessel permit*. The owner or managing owner of a United States purse seine fishing vessel of greater than 400 st (362.8 mt) carrying capacity that participates in commercial fishing operations in the ETP must possess a valid vessel permit issued under this paragraph (b) of this section. This permit is not transferable and must be renewed annually. If a vessel permit holder surrenders his/her permit to the Administrator, Southwest Region, the permit will not be returned and a new permit will not be issued before the end of the calendar year, except that a permit may be transferred to the new owner when the vessel ownership changes. Vessel permits will be valid through December 31 of each year.

(2) *Operator permit*. The person in charge of and actually controlling fishing operations (hereinafter referred to as the operator) on a United States purse seine fishing vessel engaged in commercial fishing operations under a vessel permit must possess a valid operator permit issued under this paragraph (b) of this section. Such permits are not transferable and must be renewed annually. To receive a permit, the operator must have satisfactorily completed all required training under (c)(4) of this section. The operator's permit is valid only when the permit holder is on a vessel with a valid vessel permit. Operator permits will be valid through December 31 of each year.

(3) *Possession and display*. A valid vessel permit issued pursuant to paragraph (b)(1) of this section must be on board the vessel while engaged in fishing operations, and a valid operator permit issued pursuant to paragraph (b)(2) of this section must be in the possession of the operator to whom it was issued. Permits must be shown upon request to NMFS enforcement agents, or to U.S. Coast Guard officers, and to designated agents of NMFS and IATTC (including observers). A vessel owner or operator who is at sea on a fishing trip when his or her permit expires and to whom a permit for the next year has been issued may take marine mammals under the terms of the new permit without having to display it on board the vessel until the vessel returns to port.

(4) *Application for vessel permit*. The owner or managing owner of a purse seine vessel may apply for a permit from the Administrator, Southwest Region, allowing at least 45 days for processing. An application must contain:

(i) The name, official number, tonnage, carrying capacity in short or metric tons, maximum speed in knots, processing equipment, and type and quantity of gear, including an inventory of equipment required under paragraph (c)(2) of this section if the application is for purse seining involving the intentional taking of marine mammals, of the vessel that is to be covered under the permit;

(ii) A statement of whether or not the vessel will make sets involving the intentional taking of marine mammals;

(iii) The type and identification number(s) of Federal, State, and local commercial fishing licenses under which vessel operations are conducted, and the dates of expiration;

(iv) The name(s) of the operator(s) anticipated to be used; and

(v) The name and signature of the applicant, whether he/she is the owner or the managing owner, his/her address, telephone and fax numbers, and, if applicable, the name, address, telephone and fax numbers of the agent or organization acting on behalf of the vessel.

(5) *Application for operator permit*. An applicant for an operator permit must provide the following information to the Administrator, Southwest Region, allowing at least 45 days for processing:

(i) The name, address, telephone and fax numbers of the applicant;

(ii) The type and identification number(s) of any Federal, state, and local fishing licenses held by the applicant;

(iii) The name of the vessel(s) on which the applicant anticipates serving as an operator;

(iv) The date, location, and provider of any training for the operator permit; and

(v) The applicant's signature or the signature of the applicants representative, if any.

(6) *Fees*. An application for a permit under paragraph (b)(1) of this section must include a fee of $200.00 for each vessel. There is no fee for the operator certificate. The Assistant Administrator may change the amount of these fees required at any time if a different fee is determined in accordance with the NOAA Finance Handbook and specified by the Administrator, Southwest Region, on the application form. Notification of such change will be published in the **Federal Register**. The vessel permit holder will submit the fee for the placement of observers, as established by the IATTC or other approved observer program, to the Administrator, Southwest Region, by September 1 of the year prior to the year in which the vessel will be operated in the ETP, for transmittal by the date the application for a vessel permit is due.

(7) The Administrator, Southwest Region, will determine the adequacy and completeness of an application and, upon determining that an application is adequate and complete, will approve that application and issue the appropriate permit, except for applicants having unpaid or overdue civil penalties, criminal fines, or other liabilities incurred in a legal proceeding.

(8) *Conditions applicable to all permits*— (i) *General conditions*. Failure to comply with the provisions of a permit or with these regulations may lead to suspension, revocation, modification, or denial of a permit. The permit holder, vessel, vessel owner, operator, or master may be subject, jointly and severally, to the penalties provided for under the MMPA. Procedures governing permit sanctions and denials are found at subpart D of 15 CFR part 904.

(ii) *Observer placement*. By obtaining a permit, the permit holder consents to the placement of an observer on the vessel during every trip involving operations in the ETP and agrees to payment of the fees for observer placement to the IATTC or other designated international organization. The observers may be placed under an observer program of NMFS or of the IATTC, or under another international observer program approved by the IDCP and the Administrator, Southwest Region.

(iii) *Explosives*. The use of explosive devices is prohibited in all tuna purse seine operations that involve marine mammals.

(iv) *Reporting requirements*. In accordance with paragraph (e) of this section, the vessel permit holder of each permitted vessel will notify the Administrator, Southwest Region or the IATTC contact designated by the Administrator, Southwest Region, at least 5 days in advance of the vessel's departure on a fishing voyage to allow for observer placement on every voyage. After a fishing voyage is initiated, the vessel is obligated to carry an observer until the vessel completes its voyage. A vessel that fails to carry an observer in accordance with these observer placement requirements must not engage in fishing operations for which a vessel permit is required.

(v) *Data release*. By using a permit, the permit holder authorizes the release

to NMFS of all data collected by observers aboard purse seine vessels during fishing trips under the IATTC observer program or another international observer program approved by the Administrator, Southwest Region. The permit holder must furnish the international observer program with all release forms required to authorize the observer data to be provided to NMFS. Data obtained under such releases will be used for the same purposes as would data collected directly by observers placed by NMFS and will be subject to the same standards of confidentiality.

(vi) *Protection from personal injury*. A permit holder must take all necessary steps to protect a person from personal injury without killing or injuring a marine mammal.

(vii) *Protection from personal injury*. Only if there are no alternative means to deter a marine mammal from causing personal injury, may a permit holder injure or kill the animal causing or about to cause immediate personal injury.

(viii) *Retention ermit*. Marine mammals taken in the course of commercial fishing operations will be subject to the provisions of § 216.3 with respect to ''incidental catch,'' and must not be retained except where a specific permit has been obtained authorizing the retention.

(9) *Mortality and serious injury reports*. The Administrator, Southwest Region, will provide to the public periodic status reports summarizing the estimated incidental dolphin mortality and serious injury by U.S. vessels of individual species and stocks.

(c) *Purse seining by vessels with DMLs*. In addition to the terms and conditions set forth in paragraph (b) of this section, any permit for a vessel to which a DML has been assigned under paragraph (c)(8) of this section and any operator permit when used on such a vessel are subject to the following terms and conditions:

(1) *General conditions*. (i) A vessel may be used to take marine mammals only if the taking is an incidental occurrence in the course of normal commercial tuna purse seine fishing operations and the fishing operations are under the immediate direction of the holder of a valid operator's permit.

(ii) Except as otherwise authorized by a specific permit, marine mammals incidentally taken must be immediately returned to the environment where captured without further injury. The operator of a purse seine vessel must take every precaution to refrain from causing or permitting incidental mortality or serious injury of marine mammals. Live marine mammals must not be brailed, sacked up, or hoisted onto the deck during ortza retrieval.

(iii) The vessel permit holder will notify the Administrator, Southwest Region, or the IATTC contact designated by the Administrator, Southwest Region, of any change of vessel operator at least 48 hours prior to departing on a trip. In the case of a change in operator due to an emergency, notification must be made within 72 hours of the change.

(2) *Gear, equipment, and release procedures required for valid permit*. A vessel possessing a vessel permit for purse seining involving the intentional taking of marine mammals may not engage in fishing operations involving the intentional deployment of the net on or encirclement of dolphins unless it is equipped with a dolphin safety panel in its purse seine, has the other required gear and equipment, and uses the required procedures.

(i) *Dolphin safety panel*. The dolphin safety panel must be a minimum of 180 fathoms in length (as measured before installation), except that the minimum length of the panel in nets deeper than 18 strips must be determined in a ratio of 10 fathoms in length for each strip of net depth. It must be installed so as to protect the perimeter of the backdown area. The perimeter of the backdown area is the length of corkline that begins at the outboard end of the last bowbunch pulled and continues to at least two-thirds the distance from the backdown channel apex to the stern tiedown point. The dolphin safety panel must consist of small mesh webbing not to exceed 1 1/4 inches (3.18 centimeter (cm)) stretch mesh extending downward from the corkline and, if present, the base of the dolphin apron to a minimum depth equivalent to two strips of 100 meshes of 4 1/4 inches (10.80 cm) stretch mesh webbing. In addition, at least a 20-fathom length of corkline must be free from bunchlines at the apex of the backdown channel.

(ii) *Dolphin safety panel markers*. Each end of the dolphin safety panel and dolphin apron must be identified with an easily distinguishable marker.

(iii) *Dolphin safety panel hand holds*. Throughout the length of the corkline under which the dolphin safety panel and dolphin apron are located, hand hold openings must be secured so that they will not allow the insertion of a 1 3/8 inch (3.50 cm) diameter cylindrical-shaped object.

(iv) *Dolphin safety panel corkline hangings*. Throughout the length of the corkline under which the dolphin safety panel and dolphin apron are located, corkline hangings will be inspected by the vessel operator following each trip. Hangings found to have loosened to the extent that a cylindrical object with a 1 3/8 inch (3.50 cm) diameter can be inserted between the cork and corkline hangings, must be tightened so as not to allow the insertion of a cylindrical object with a 1 3/8 inch (3.50 cm) diameter.

(v) *Speedboats*. A minimum of three speedboats in operating condition must be carried. All speedboats carried aboard purse seine vessels and in operating condition must be rigged with tow lines and towing bridles or towing posts. Speedboat hoisting bridles must not be substituted for towing bridles.

(vi) *Raft*. A raft suitable to be used as a dolphin observation-and-rescue platform must be carried.

(vii) *Facemask and snorkel, or viewbox*. At least two facemasks and snorkels or viewboxes must be carried.

(viii) *Lights*. The vessel must be equipped with lights capable of producing a minimum of 140,000 lumens of output for use in darkness to ensure sufficient light to observe that procedures for dolphin release are carried out and to monitor incidental dolphin mortality.

(3) *Vessel inspection*—(i) *Annual*. At least once during each calendar year, purse seine nets and other gear and equipment required by these regulations must be made available for inspection and for a trial set/net alignment by an authorized NMFS inspector or IATTC staff as specified by the Administrator, Southwest Region, in order to obtain a vessel permit.

(ii) *Reinspection*. Purse seine nets and other gear and equipment required by these regulations must be made available for reinspection by an authorized NMFS inspector or IATTC staff as specified by the Administrator, Southwest Region. The vessel permit holder must notify the Administrator, Southwest Region, of any net modification at least 5 days prior to departure of the vessel in order to determine whether a reinspection or trial set/net alignment is required.

(iii) Upon failure to pass an inspection or reinspection, a vessel may not engage in purse seining involving the intentional taking of marine mammals until the deficiencies in gear or equipment are corrected as required by NMFS.

(4) *Operator permit holder training requirements*. An operator will maintain proficiency sufficient to perform the procedures required herein, and must attend and satisfactorily complete a formal training session approved by the Administrator, Southwest Region, in order to obtain his or her permit. At the training session an attendee will be

instructed concerning the relevant provisions and regulatory requirements of the MMPA and the IDCP, and the fishing gear and techniques that are required for, or will contribute to, reducing serious injury and mortality of dolphin incidental to purse seining for tuna. Operators who have received a written certificate of satisfactory completion of training and who possess a current or previous calendar year permit will not be required to attend additional formal training sessions unless there are substantial changes in the relevant provisions or implementing regulations of the MMPA or the IDCP, or in fishing gear and techniques. Additional training may be required for any operator who is found by the Administrator, Southwest Region, to lack proficiency in the required fishing procedures or familiarity with the relevant provisions or regulations of the MMPA or the IDCP.

(5) *Marine mammal release requirements.* All operators must use the following procedures during all sets involving the incidental taking of marine mammals in association with the capture and landing of tuna.

(i) *Backdown procedure.* Backdown must be performed following a purse seine set in which dolphins are captured in the course of catching tuna, and must be continued until it is no longer possible to remove live dolphins from the net by this procedure. At least one crewman must be deployed during backdown to aid in the release of dolphins. Thereafter, other release procedures required will be continued so that all live dolphins are released prior to the initiation of the sack-up procedure.

(ii) *Prohibited use of sharp or pointed instrument.* The use of a sharp or pointed instrument to remove any marine mammal from the net is prohibited.

(iii) *Sundown sets prohibited.* On every set encircling dolphin, the backdown procedure must be completed no later than one-half hour after sundown, except as provided here. For the purpose of this section, sundown is defined as the time at which the upper edge of the sun disappears below the horizon or, if the view of the sun is obscured, the local time of sunset calculated from tables developed by the U.S. Naval Observatory or other authoritative source approved by the Administrator, Southwest Region. A sundown set is a set in which the backdown procedure has not been completed and rolling the net to sack-up has not begun within one-half hour after sundown. Should a set extend beyond one-half hour after sundown, the operator must use the required marine mammal release procedures including the use of the high intensity lighting system. In the event a sundown set occurs where the seine skiff was let go sufficiently in advance of sundown that the vessel should have been able to comply with the sundown set prohibition, and an earnest effort to rescue dolphins is made, the International Review Panel of the IDCP may recommend to the United States that in the view of the International Review Panel, prosecution by the United Sates is not recommended. Any such recommendation will be considered by the United States in evaluating the appropriateness of prosecution in a particular circumstance.

(iv) *Dolphin safety panel.* During backdown, the dolphin safety panel must be positioned so that it protects the perimeter of the backdown area. The perimeter of the backdown area is the length of corkline that begins at the outboard end of the last bow bunch pulled and continues to at least two-thirds the distance from the backdown channel apex to the stern tiedown point.

(6) *Experimental fishing operations.* The Administrator, Southwest Region, may authorize experimental fishing operations, consistent with the provisions of the IDCP, for the purpose of testing proposed improvements in fishing techniques and equipment that may reduce or eliminate dolphin mortality or serious injury, or do not require the encirclement of dolphins in the course of fishing operations. The Administrator, Southwest Region, may waive, as appropriate, any requirements of this section except DMLs and the obligation to carry an observer.

(i) A vessel permit holder may apply for an experimental fishing operation waiver by submitting the following information to the Administrator, Southwest Region, no less than 90 days before the date the proposed operation is intended to begin:

(A) The name(s) of the vessel(s) and the vessel permit holder(s) to participate;

(B) A statement of the specific vessel gear and equipment or procedural requirement to be exempted and why such an exemption is necessary to conduct the experiment;

(C) A description of how the proposed modification to the gear and equipment or procedures is expected to reduce incidental mortality or serious injury of marine mammals;

(D) A description of the applicability of this modification to other purse seine vessels;

(E) The planned design, time, duration, and general area of the experimental operation;

(F) The name(s) of the permitted operator(s) of the vessel(s) during the experiment; and

(G) A statement of the qualifications of the individual or company doing the analysis of the research.

(ii) The Administrator, Southwest Region, will acknowledge receipt of the application and, upon determining that it is complete, will publish a notice in the **Federal Register** summarizing the application, making the full application available for inspection and inviting comments for a minimum period of 30 days from the date of publication.

(iii) The Administrator, Southwest Region, after considering the information identified in paragraph (c)(6)(i) of this section and the comments received, will either issue a waiver to conduct the experiment which includes restrictions or conditions deemed appropriate, or deny the application, giving the reasons for denial.

(iv) A waiver for an experimental fishing operation will be valid only for the vessels and operators named in the permit, for the time period and areas specified, for trips carrying an observer designated by the Administrator, Southwest Region, when all the terms and conditions of the permit are met.

(v) The Administrator, Southwest Region, may suspend or revoke an experimental fishing waiver in accordance with 15 CFR part 904 if the terms and conditions of the waiver or the provisions of the regulations are not followed.

(7) *Operator permit holder performance requirements.* [Reserved]

(8) *Vessel permit holder dolphin mortality limits.* For purposes of this paragraph, the term ''vessel permit holder'' includes both the holder of a current vessel permit and also the holder of a vessel permit for the following year.

(i) By September 1 each year, a vessel permit holder desiring a DML for the following year must provide to the Administrator, Southwest Region, the name of the United States purse seine fishing vessel(s) of carrying capacity greater than 400 st (362.8 mt) that the owner intends to use to intentionally deploy purse seine fishing nets in the ETP to encircle dolphins in an effort to capture tuna during the following year. NMFS will forward the list of purse seine vessels to the Director of the IATTC on or before October 1, or as otherwise required by the IDCP, for assignment of a DML for the following

year under the provisions of Annex IV of the Agreement on the IDCP.

(ii) Each vessel permit holder who desires a DML for the period July 1 to December 31 for a vessel that has not previously had a DML assigned for the year must provide the Administrator, Southwest Region, by September 1 of the prior year, the name of the United States purse seine fishing vessel(s) of greater than 400 st (362.8 mt) carrying capacity that the owner intends to use to intentionally deploy purse seine fishing nets in the ETP to encircle dolphins in an effort to capture tuna during the period. NMFS will forward the list of purse seine vessels to the Director of the IATTC on or before April 1, or as otherwise required under the IDCP, for possible assignment of a DML for the 6-month period July 1 to December 31. Under the IDCP, the DML will be calculated by the IDCP from any unutilized pool of DMLs in accordance with the procedure described in Annex IV of the Agreement on the IDCP and will not exceed one-third of an unadjusted full-year DML as calculated by the IDCP.

(iii)(A) The Administrator, Southwest Region, will notify vessel owners of the DML assigned for each vessel for the following year, or the second half of the year, as applicable.

(B) The Administrator, Southwest Region, may adjust the DMLs in accordance with Annex IV of the Agreement on the IDCP. All adjustments of full-year DMLs will be made before January 1, and the Administrator, Southwest Region, will notify the Director of the IATTC of any adjustments prior to a vessel departing on a trip using its adjusted DML. The notification will be no later than February 1 in the case of adjustments to full-year DMLs, and no later than May 1 in the case of adjustments to DMLs for the second half of the year.

(C) Within the requirements of Annex IV of the Agreement on the IDCP, the Administrator, Southwest Region, may adjust a vessel's DML if it will further scientific or technological advancement in the protection of marine mammals in the fishery or if the past performance of the vessel indicates that the protection or use of the yellowfin tuna stocks or marine mammals is best served by the adjustment, within the mandates of the MMPA. Experimental fishing operation waivers or scientific research permits will be considered a basis for adjustments.

(iv)(A) A vessel assigned a full-year DML that does not make a set on dolphins by April 1 or that leaves the fishery will lose its DML for the remainder of the year, unless the failure to set on dolphins is due to *force majeure* or other extraordinary circumstances as determined by the International Review Panel.

(B) A vessel assigned a DML for the second half of the year will be considered to have lost its DML if the vessel has not made a set on dolphins before December 31, unless the failure to set on dolphins is due to *force majeure* or extraordinary circumstances as determined by the International Review Panel.

(C) Any vessel that loses its DML for 2 consecutive years will not be eligible to receive a DML for the following year.

(D) NMFS will determine, based on available information, whether a vessel has left the fishery.

(*1*) A vessel lost at sea, undergoing extensive repairs, operating in an ocean area other than the ETP, or for which other information indicates will no longer be conducting purse seine operations in the ETP for the remainder of the period covered by the DML will be determined to have left the fishery.

(*2*) NMFS will make all reasonable efforts to determine the intentions of the vessel owner, and the owner of any vessel that has been preliminarily determined to have left the fishery will be provided notice of such preliminary determination and given the opportunity to provide information on whether the vessel has left the fishery prior to NMFS making a final determination under 15 CFR part 904 and notifying the IATTC.

(v) Any vessel that exceeds its assigned DML after any applicable adjustment under paragraph (c)(8)(iii) of this section will have its DML for the subsequent year reduced by 150 percent of the overage, unless another adjustment is determined by the International Review Panel.

(vi) A vessel that is covered by a valid vessel permit and that does not normally fish for tuna in the ETP but desires to participate in the fishery on a limited basis may apply for a per-trip DML from the Administrator, Southwest Region, at any time, allowing at least 60 days for processing. The request must state the expected number of trips involving sets on dolphins and the anticipated dates of the trip or trips. The request will be forwarded to the Director of the IATTC for processing in accordance with Annex IV of the Agreement on the IDCP. A per-trip DML will be assigned if one is made available in accordance with the terms of Annex IV of the IDCP. If a vessel assigned a per-trip DML does not set on dolphins during that trip, the vessel will be considered to have lost its DML unless this was a result of *force majeure* or other extraordinary circumstances as determined by the International Review Panel. After two consecutive losses of a DML, a vessel will not be eligible to receive a DML for the next fishing year.

(vii) Observers will make their records available to the vessel operator at any reasonable time, including after each set, in order for the operator to monitor the balance of the DML(s) remaining for use.

(viii) Vessel and operator permit holders must not deploy a purse seine net on or encircle any school of dolphins containing individuals of a particular stock of dolphins:

(A) when the applicable per-stock per-year dolphin mortality limit for that stock of dolphins for that vessel, if so assigned, has been reached or exceeded; or

(B) after the time and date provided in actual notification or notification in the **Federal Register** by the Administrator, Southwest Region, based upon the best available evidence, stating when any applicable per-stock per-year dolphin mortality limit has been reached or exceeded, or is expected to be reached in the near future.

(ix) If individual dolphins belonging to a stock that is prohibited from being taken are not reasonably observable at the time the net skiff attached to the net is released from the vessel at the start of a set, the fact that individuals of that stock are subsequently taken will not be cause for enforcement action provided that all procedures required by the applicable regulations have been followed.

(x) Vessel and operator permit holders must not intentionally deploy a purse seine net on or encircle dolphins intentionally:

(A) when the vessel's DML, as adjusted, is reached or exceeded; or

(B) after the date and time provided in actual notification or notice in the **Federal Register** by the Administrator, Southwest Region, based upon the best available evidence, that intentional sets on dolphins must cease because the total of the DMLs assigned to the U.S. fleet has been reached or exceeded, or is expected to be exceeded in the near future in the absence of the notification to cease intentional sets on dolphins.

(xi) Sanctions recommended by the International Review Panel for any violation of these rules will be considered by NMFS and NOAA in enforcement actions brought under these regulations.

(xii) Intentionally deploying a purse seine net on, or to encircle, dolphins after a vessel's DML, as adjusted, has been reached will disqualify the vessel from consideration for a DML for the

following year. If already assigned, the DML for the following year will be withdrawn, and the Director of the IATTC will be notified by NMFS that the DML assigned to that vessel will be unutilized. Procedures found at 15 CFR part 904 apply to the withdrawal of the permit.

(d) *Purse seining by vessels without assigned DMLs*. In addition to the requirements of paragraph (b) of this section, a vessel permit used for a trip not involving an assigned DML and the operator's permit when used on such a vessel are subject to the following terms and conditions: a permit holder may take marine mammals provided that such taking is an accidental occurrence in the course of normal commercial fishing operations and the vessel does not intentionally deploy its net on, or to encircle, dolphins; marine mammals taken incidental to such commercial fishing operations will be immediately returned to the environment where captured without further injury, using release procedures such as hand rescue, and aborting the set at the earliest effective opportunity; the use of one or more rafts and facemasks or viewboxes to aid in the rescue of dolphins is recommended.

(e) *Observers*—(1) The holder of a vessel permit must allow an observer duly authorized by the Administrator, Southwest Region, to accompany the vessel on all fishing trips in the ETP for the purpose of conducting research and observing operations, including collecting information that may be used in civil or criminal penalty proceedings, forfeiture actions, or permit or certificate sanctions.

(2) Research and observation duties will be carried out in such a manner as to minimize interference with commercial fishing operations. Observers must be provided access to vessel personnel and to dolphin safety gear and equipment, electronic navigation equipment, radar displays, high powered binoculars, and electronic communication equipment. The navigator must provide true vessel locations by latitude and longitude, accurate to the nearest minute, upon request by the observer. Observers must be provided with adequate space on the bridge or pilothouse for clerical work, as well as space on deck adequate for carrying out observer duties. No vessel owner, master, operator, or crew member of a permitted vessel may impair, or in any way interfere with, the research or observations being carried out. Masters must allow observers to report, in coded form, information by radio concerning the take of marine mammals and other observer collected data upon request of the observer.

(3) Any marine mammals killed during fishing operations that are accessible to crewmen and requested from the permit holder or master by the observer must be brought aboard the vessel and retained for biological processing, until released by the observer for return to the ocean. Whole marine mammals or marine mammal parts designated as biological specimens by the observer must be retained in cold storage aboard the vessel until retrieved by authorized personnel of NMFS or the IATTC when the vessel returns to port for unloading.

* * * * *

(f) * * *

(2)(i) *HTS numbers requiring a fisheries certificate of origin, subject to yellowfin tuna embargo*. The following U.S. Harmonized Tariff Schedule (HTS) numbers identify yellowfin tuna or yellowfin tuna products that are harvested in the ETP purse seine fishery and imported into the United States. All shipments containing tuna or tuna products imported into the United States under these HTS numbers must be accompanied by a Fisheries Certificate of Origin (FCO), NOAA Form 370. Yellowfin tuna harvested using a purse seine in the ETP, if exported from a nation with purse seine vessels that fish for tuna in the ETP, may not be imported into the United States unless the nation has an affirmative finding under paragraph (f)(9) of this section.

(A) *Frozen*:

0303.42.00.20 Yellowfin tuna, whole, frozen.

0303.42.00.40 Yellowfin tuna, eviscerated, head on, frozen.

0303.42.00.60 Yellowfin tuna, other, frozen.

(B) *Canned*:

1604.14.10.00 Tuna, non-specific, in airtight containers, in oil.

1604.14.20.40 Tuna, other than albacore, not over 7kg, in airtight containers.

1604.14.30.40 Tuna, other than albacore, in airtight containers, not in oil, over quota.

(C) *Loins*:

1604.14.40.00 Tuna, not in airtight containers, not in oil, over 6.8 kg.

1604.14.50.00 Tuna, other, not in airtight containers.

(D) *Other (only if the product contains tuna)*:

0304.10.40.99 Other fish, fillets and other fish meat, fresh or chilled.

0304.20.20.66 Other fish, fillets, skinned, in blocks weighing over 4.5kg, frozen.

0304.20.60.99 Other fish, fillets, frozen.

0304.90.10.89 Other fish meat, in bulk or immediate containers, fresh or chilled.

0304.90.90.92 Other fish meat, fresh or chilled.

(ii) *HTS numbers requiring a fisheries certificate of origin, not subject to yellowfin tuna embargo*. The following HTS numbers identify tuna or tuna products, other than fresh tuna or tuna identified in paragraph (f)(2)(i) of this section, known to be imported into the United States. All shipments imported into the United States under these HTS numbers must be accompanied by a Fisheries Certificate of Origin (FCO), NOAA Form 370. The shipment may not be imported into the United States if harvested by a large-scale driftnet nation, unless accompanied by the official statement described in paragraph (f)(5)(x) of this section.

(A) *Frozen*:

0303.41.00.00 Albacore or longfinned tunas, frozen.

0303.43.00.00 Skipjack, frozen.

0303.49.00.20 Bluefin, frozen.

0303.49.00.40 Other tuna, frozen.

(B) *Canned*:

1604.14.20.20 Albacore tuna, in airtight containers, not in oil, not over 7kg, in quota.

1604.14.30.20 Albacore tuna, in airtight containers, not in oil, not in quota.

(iii) *Exports from driftnet nations only: HTS numbers requiring a fisheries certificate of origin and official certification*. The following HTS numbers identify categories of fish and shellfish, other than those identified in paragraphs (f)(2)(i) and (f)(2)(ii) of this section, known to have been harvested using a large-scale driftnet and imported into the United States. Shipments exported from a large-scale driftnet nation and imported into the United States under any of the HTS numbers listed in paragraph (f)(2) of this section must be accompanied by an FCO and the official statement described in paragraph (f)(5)(x) of this section.

(A) *Frozen*:

0303.10.00.12 Salmon, chinook, frozen.

0303.10.00.22 Salmon, chum, frozen.

0303.10.00.32 Salmon, pink, frozen.

0303.10.00.42 Salmon, sockeye, frozen.

0303.10.00.52 Salmon, coho, frozen.

0303.10.00.62 Salmon, Pacific, non-specific, frozen.

0303.21.00.00 Trout, frozen.

0303.22.00.00 Salmon, Atlantic and Danube, frozen.

0303.29.00.00 Salmonidae, other, frozen.

0303.75.00.10 Dogfish, frozen.

0303.75.00.90 Other sharks, frozen.

0303.79.20.41 Swordfish steaks, frozen

0303.79.20.49 Swordfish, other, frozen.

0303.79.40.96 Fish, other, frozen.

0304.20.20.66 Fish, fillet, skinned, in blocks frozen over 4.5 kg.

0304.20.60.08 Salmonidae, salmon fillet, frozen.
0304.20.60.99 Fish, fillet, frozen.
0307.49.00.10 Squid, other, fillet, frozen.

(B) *Canned*:

1604.11.20.20 Salmon, pink, canned in oil, in airtight containers.
1604.11.20.30 Salmon, sockeye, canned in oil, in airtight containers.
1604.11.20.90 Salmon, other, canned in oil, in airtight containers.
1604.11.40.10 Salmon, chum, canned, not in oil.
1604.11.40.20 Salmon, pink, canned, not in oil.
1604.11.40.30 Salmon, sockeye, canned, not in oil.
1604.11.40.40 Salmon, other, canned, not in oil.
1604.11.40.50 Salmon, other, canned, not in oil.
1604.19.20.00 Fish, other, in airtight containers, not in oil.
1604.19.30.00 Fish, other, in airtight containers, in oil.
1605.90.60.55 Squid, loligo, prepared/preserved.

(C) *Other*:

0304.10.40.99 Other fish, fillets and other fish meat, fresh or chilled.
0304.20.20.66 Other fish, fillets, skinned, in blocks weighing over 4.5kg, frozen.
0304.20.60.98 Other fish, fillets, frozen.
0304.90.10.89 Other fish, fillets and fish meat, in bulk or in immediate containers, fresh or chilled.
0304.90.90.92 Other fish meat, fresh or chilled.
0305.30.60.80 Fish, non-specific, fillet. dried/salted/brine.
0305.49.40.40 Fish, non-specific, smoked.
0305.59.20.00 Shark fins.
0305.59.40.00 Fish, non-specific, dried.
0305.69.40.00 Salmon, non-specific, salted.
0305.69.50.00 Fish, non-specific, in immediate containers, salted, not over 6.8kg.
0305.69.60.00 Fish, non-specific, salted, other.
0307.49.00.50 Squid, non-specific, frozen/dried/salted/brine.
0307.49.00.60 Squid, non-specific, & cuttle fish frozen/dried/salted/brine.

(3) *Imports requiring a fisheries certificate of origin*.

Shipments containing the following may not be imported into the United States unless a completed FCO is filed with the Customs Service at the time of importation:

(i) Tuna classified under an HTS number listed in paragraphs (f)(2)(i) or (f)(2)(ii) of this section, or

(ii) Fish classified under an HTS number listed in paragraph (f)(2) of this section that was harvested by a vessel of a large-scale driftnet nation, as identified under paragraph (f)(8) of this section.

(4) *Disposition of fisheries certificates of origin*. The FCO form described in paragraph (f)(5) of this section may be obtained from the Administrator, Southwest Region, or downloaded from the Internet at http://swr.ucsd.edu/noaa370.htm. The FCO required under paragraph (f)(3) of this section must accompany the tuna or tuna products from entry into the United States, through final processing for wholesale or retail sale, and it must be endorsed at each change in ownership. FCOs that require multiple endorsements must be submitted to the Administrator, Southwest Region, by the last endorser when all required endorsements are completed. An invoice must accompany the shipment at the time of importation or, in the alternative, must be made available within 30 days of a request by the Secretary or the Administrator, Southwest Region, to produce the invoice.

(5) *Contents of fisheries certificate of origin*. An FCO, certified to be accurate by the first exporter of the accompanying shipment, must include the following information:

(i) Exporter's full name and complete address;

(ii) Consignee's full name and complete address;

(iii) Species description (common and scientific names), product form, and HTS number;

(iv) Quantity in kilograms of the fish or fish products;

(v) Ocean area where the fish were harvested (ETP, Western Pacific Ocean, South Pacific Ocean, Atlantic Ocean, Caribbean Sea, Indian Ocean, or other);

(vi) Type of fishing gear used to harvest the fish (purse seine, longline, baitboat, large-scale driftnet, gillnet, trawl, pole and line, or other);

(vii) Country under whose laws the harvesting vessel operated based upon the flag of the vessel or, if a certified charter vessel, the country that accepted responsibility for the vessel's fishing operations;

(viii) Dates on which the fishing trip began and ended;

(ix) If the shipment includes tuna or products from tuna harvested with a purse seine net in the eastern tropical Pacific, the name of the harvesting vessel; and

(x) For shipments harvested by vessels of a nation known to use large-scale driftnets, as determined by the Secretary pursuant to paragraph (f)(8) of this section, a statement must be included on the Fisheries Certificate of Origin, or by separate attachment, that is dated and signed by a responsible government official of the harvesting nation, certifying that the fish or fish products were harvested by a method other than large-scale driftnet.

(6) *Dolphin-safe label*. Tuna or tuna products sold in or exported from the United States that include on the label the term ''dolphin-safe'' or any other term or symbol that claims or suggests the tuna were harvested in a manner not injurious to dolphins are subject to the requirements of subpart H of this part.

(7) *Scope of embargoes*—(i) *ETP yellowfin tuna embargo*. Yellowfin tuna or yellowfin tuna products harvested using a purse seine in the ETP identified by an HTS number listed in paragraph (f)(2)(i) of this section may not be imported into the United States if such tuna or tuna products were:

(A) Harvested on or after the effective date of section 4 of the IDCPA by, or exported from, a nation that the Assistant Administrator has determined has purse seine vessels of greater than 400 st (362.8 mt) carrying capacity harvesting tuna in the ETP, unless the Assistant Administrator has made an affirmative finding required for importation for that nation under paragraph (f)(9) of this section;

(B) Exported from an intermediary nation, as defined in section 3 of the MMPA, and a ban is currently in force prohibiting the importation from that nation under paragraph (f)(9)(viii) of this section; or

(C) Harvested before the effective date of section 4 of the IDCPA and would have been banned from importation under the section 101 (a)(2) of the MMPA at the time of harvest.

(ii) *Driftnet embargo*. A shipment containing an item listed in paragraph (f)(2) of this section may not be imported into the United States that:

(A) Was exported from or harvested on the high seas by any nation determined by the Assistant Administrator to be engaged in large-scale driftnet fishing, unless the FCO is accompanied by an original statement by a responsible government official of the harvesting nation, signed and dated by that official, certifying that the fish or fish products were harvested by a method other than large-scale driftnet; or

(B) Is identified on the FCO as harvested by a large-scale driftnet.

(8) *Large-scale driftnet nation: determination*. Based upon the best information available, the Assistant Administrator will determine which nations have registered vessels that engage in fishing using large-scale driftnets. Such determinations will be published in the **Federal Register**. A responsible government official of any such nation may certify to the Assistant Administrator that none of the nation's vessels use large-scale driftnets. Upon receipt of the certification, the Assistant

Administrator may find, and publish such finding in the **Federal Register**, that none of that nation's vessels engage in fishing with large-scale driftnets.

(9) *Affirmative finding procedure for yellowfin tuna harvested using a purse seine in the ETP.* (i) The Assistant Administrator will determine whether to make an affirmative finding based upon documentary evidence provided by the government of the exporting nation, by the government of the harvesting nation, if different, and by the IDCP and the IATTC, and will publish the finding in the **Federal Register**. An affirmative finding applies to tuna and tuna products that were harvested by vessels of the nation after the effective date of section 4 of the IDCPA. To make an affirmative finding, the Assistant Administrator must find that:

(A) The harvesting nation participates in the IDCP and is either a member of the IATTC or has initiated (and within 6 months thereafter completed) all steps required of applicant nations, in accordance with article V, paragraph 3, of the Convention establishing the IATTC, to become a member of that organization;

(B) The nation is meeting its obligations under the IDCP and its obligations of membership in the IATTC, including all financial obligations; and

(C) The annual total dolphin mortality and the annual per-stock per-year dolphin mortality of the nation's purse seine fleet (including certified charter vessels operating under its jurisdiction) did not exceed the aggregated total of the mortality limits assigned by the IDCP for that nation's purse seine vessels for the year preceding the year in which the finding would start.

(ii) *Documentary evidence and compliance with the IDCP.*—(A) *Documentary evidence.* The Assistant Administrator will make an affirmative finding under paragraph (f)(9)(i) of this section only if the government of the harvesting nation provides directly to the Assistant Administrator, or authorizes the IATTC to release to the Assistant Administrator, complete, accurate, and timely information that enables the Assistant Administrator to determine whether the harvesting nation is meeting the obligations of the IDCP, and whether ETP-harvested tuna imported from such nation comports with the tracking and verification regulations of subpart H of this part.

(B) *Revocation.* After considering the information provided under paragraph (f)(9)(ii)(A) of this section, each party's funding of the IATTC, and any other relevant information, including information that a nation is consistently failing to take enforcement actions on violations which diminish the effectiveness of the IDCP, the Assistant Administrator, in consultation with the Secretary of State, will revoke an affirmative finding issued to a nation that is not meeting the obligations of the IDCP.

(iii) A harvesting nation may apply for an affirmative finding at any time by providing to the Assistant Administrator the information and authorizations required in paragraphs (f)(9)(i) and (f)(9)(ii) of this section, allowing at least 60 days from the submission of complete information to NMFS for processing.

(iv) The Assistant Administrator will make or renew an affirmative finding for the period from April 1 through March 31, or portion thereof, if the harvesting nation has provided all the information and authorizations required by paragraphs (f)(9)(i) and (f)(9)(ii) of this section, and met the requirements of paragraphs (f)(9)(i) and (f)(9)(ii) of this section.

(v) *Period of validity.* A finding will remain valid for 1 year or for such other period as the Assistant Administrator may determine. An affirmative finding will be terminated if the Assistant Administrator determines that the requirements of this paragraph are no longer being met.

(vi) *Reconsideration of finding.* The Assistant Administrator may reconsider a finding upon a request from, and the submission of additional information by, the harvesting nation, if the information indicates that the nation has met the requirements under paragraphs (f)(9)(i) and (f)(9)(ii) of this section.

(vii) *Verification.* The Assistant Administrator may require the submission of supporting documentation or other verification of statements made in connection with requests to allow importations.

(viii) *Intermediary nation.* Except as authorized under this paragraph (f)(9)(viii), any tuna or tuna products in the classifications listed in paragraph (f)(2)(i) of this section from any intermediary nation, as that term is defined in section 3 of the MMPA, may not be imported into the United States, unless shown not to be yellowfin tuna or yellowfin tuna products harvested by purse seine in the ETP. Imports from an intermediary nation of tuna and tuna products in these classifications may be imported into the United States if the Assistant Administrator determines and publishes in the **Federal Register** that the intermediary nation has provided certification and reasonable proof that it has not imported in the preceding 6 months yellowfin tuna or yellowfin tuna products that are subject to a ban on direct importation into the United States under section 101(a)(2)(B) of the MMPA. Shipments of yellowfin tuna or yellowfin tuna products through a nation on a through bill of lading or in another manner that does not enter the shipments into that nation as an importation do not make that nation an intermediary nation. The Assistant Administrator will review decisions under this paragraph (f)(9)(viii) upon the request of an intermediary nation. Such requests must be accompanied by specific and detailed supporting information or documentation indicating that a review or reconsideration is warranted. For purposes of this paragraph (f)(9)(viii), the term ''certification and reasonable proof'' means the submission to the Assistant Administrator by a responsible government official from the nation of a document reflecting the nation's customs records for the preceding 6 months, together with a certification attesting that the document is accurate.

(ix) *Pelly certification.* After 6 months of an embargo being in place against a nation under this section, that fact will be certified to the President for purposes of certification under section 8(a) of the Fishermen's Protective Act of 1967 (22 U.S.C. 1978(a)) for as long as the embargo remains in effect.

(x) *Coordination.* The Assistant Administrator will promptly advise the Department of State and the Department of the Treasury of embargo decisions, actions and finding determinations.

* * * * *

(12) *Dolphin-safe requirements.*—(i) It is unlawful for any person to sell, purchase, offer for sale, transport, or ship in the United States, any tuna or tuna products unless the tuna products are either dolphin-safe or otherwise are covered by an affirmative finding made under paragraphs (f)(9)(i) through (f)(9)(v) of this section.

(ii) For purposes of this section, tuna or tuna products are dolphin-safe if they are dolphin-safe under subpart H of this part.

(g) *Penalties.* Any person or vessel subject to the jurisdiction of the United States will be subject to the penalties provided for under the MMPA for the conduct of fishing operations in violation of these regulations.

4. In Subpart D, a new § 216.46, is added to read as follows:

§ 216.46 U.S. citizens on foreign flag vessels operating under the International Dolphin Conservation Program.

The MMPA's provisions will not apply to a citizen of the United States who incidentally takes any marine mammal during fishing operations in the ETP which are outside the U.S. exclusive economic zone (as defined in section 3 of the Magnuson-Stevens Fishery Conservation and Management Act (16 U.S.C. § 1802)), while employed on a fishing vessel of a harvesting nation that has an affirmative finding under § 216.24(f) based upon the harvesting nation's participation in, and compliance with, the IDCP.

5. Sections 216.90 through 216.94 are revised to read as follows:

§ 216.90 Purposes.

This subpart governs the requirements for labeling tuna or tuna products offered for sale in or exported from the United States that uses the term ''dolphin-safe'' or that suggests the tuna were harvested in a manner not injurious to dolphins, or that uses any label or mark that refers to dolphins, porpoises, or marine mammals other than the official mark described in § 216.96.

§ 216.91 Labeling requirements.

(a) It is a violation of section 5 of the Federal Trade Commission Act (15 U.S.C. 45) for any producer, importer, exporter, distributor, or seller of any tuna products that are exported from or offered for sale in the United States to include on the label of those products the term ''dolphin-safe'' or any other term or symbol that claims or suggests that the tuna contained in the products were harvested using a method of fishing that is not harmful to dolphins if the products contain tuna harvested:

(1) By a vessel engaged in large-scale driftnet fishing;

(2) Outside the ETP by a vessel using a purse seine net:

(i) In a fishery in which the Assistant Administrator has determined that a regular and significant association occurs between dolphins and tuna (similar to the association between dolphins and tuna in the ETP), unless such products are accompanied by a written statement, executed by the captain of the vessel and an observer participating in a national or international program acceptable to the Assistant Administrator, certifying that no purse seine net was intentionally deployed on or used to encircle dolphins during the particular voyage on which the tuna were caught and no dolphins were killed or seriously injured in the sets in which the tuna were caught; or

(ii) In any other fishery unless the products are accompanied by a written statement executed by the captain of the vessel certifying that no purse seine net was intentionally deployed on or used to encircle dolphins during the particular voyage on which the tuna was harvested;

(3) In the ETP by a purse seine vessel of greater than 400 st (362.8 mt) carrying capacity unless the tuna meets the requirements for being considered dolphin-safe under §§ 216.92 and 216.94; or

(4) By a vessel in a fishery other than one described in paragraphs (a)(1), (a)(2), or (a)(3) of this section that is identified by the Assistant Administrator as having a regular and significant mortality or serious injury of dolphins, unless such product is accompanied by a written statement, executed by the captain of the vessel and an observer participating in a national or international program acceptable to the Assistant Administrator, that no dolphins were killed or seriously injured in the sets or other gear deployments in which the tuna were caught, provided that the Assistant Administrator determines that such an observer statement is necessary.

(b) It is a violation of section 5 of the Federal Trade Commission Act (15 U.S.C. 45) to willingly and knowingly use a label referred to in this section in a campaign or effort to mislead or deceive consumers about the level of protection afforded dolphins under the IDCP.

§ 216.92 Tuna products harvested in the ETP by purse seine vessels greater than 400 st (362.8 mt) carrying capacity.

(a) For purposes of § 216.91(a)(3), tuna products that contain tuna harvested in the ETP by a purse seine vessel greater than 400 st (362.8 mt) carrying capacity are dolphin-safe if accompanied by:

(1) A completed FCO;

(2) A written statement executed by the captain providing the certification required under paragraph (b) of this section;

(3) A written statement certifying that an observer approved by the IDCP was on board the vessel during the entire trip and that such observer provided the certification required under paragraph (b) of this section. The statement must be signed by:

(i) The Assistant Administrator or his/her designee; or

(ii) A representative of the IATTC; or

(iii) An authorized representative of a nation participating in the IDCP whose national observer program meets the requirements of the IDCP; or

(iv) An authorized representative of an international organization's observer program approved by the IDCP; and

(4) An endorsement on the FCO by each exporter, importer, and processor certifying that, to the best of his or her knowledge and belief, the FCO and attached documentation are complete and accurate.

(b) *Certifications*. (1) Both the written certifications of the captain and the observer must state that:

(i) No tuna were caught on the trip in which such tuna were harvested using a purse seine net intentionally deployed on or to encircle dolphins; or

(ii) No dolphins were killed or seriously injured during the sets in which the tuna were caught.

(2) After the date set by the Assistant Administrator in a notice in the **Federal Register** announcing an initial finding that does not conclude that the intentional deployment of purse seine nets on or encirclement of dolphins is having a significant adverse impact on any depleted dolphin stock, the written certifications of the captain and the observer need only provide the statement required in paragraph (b)(1)(ii) of this section.

(3) If, after publishing notification under paragraph (b)(2) of this section, the Assistant Administrator publishes notification in the **Federal Register** announcing a subsequent finding that the intentional deployment of purse seine nets on or encirclement of dolphins is having a significant adverse impact on any depleted stock, the written certifications of the captain and the observer must provide all of the statements set forth in paragraph (b)(1) of this section commencing with the effective date provided in the notice.

§ 216.93 Submission of documentation.

The documents required by § 216.91 and § 216.92 must accompany the tuna product whenever it is offered for sale or export, except that these documents need not accompany the product when offered for sale if:

(a) The documents do not require further endorsement by any importer or processor, and are submitted to officials of the U.S. Customs Service at the time of import; or

(b) the documents are endorsed as required by § 216.92 (a)(4) and the final processor must deliver the endorsed documents to the Administrator, Southwest Region, or to U.S. Customs as required.

§ 216.94 Tracking and verification program.

The Administrator, Southwest Region, has established a tracking and

verification program to accurately document the ''dolphin-safe'' condition of tuna as it is fished, processed, and sold to wholesale and retail markets in the United States and throughout the world. The tracking program includes procedures and reports for use when importing tuna into the U.S. and during domestic purse seine fishing, processing, and marketing in the U.S. and abroad. Verification of tracking system operations is attained through the establishment of audit and document review requirements.

(a) *Tracking fishing operations*. (1) During ETP fishing trips by purse seine vessels, tuna caught in sets designated as ''dolphin-safe'' by the vessel observer must be stored separately from tuna caught in ''non-dolphin-safe'' sets from the time of capture through unloading, except as provided in paragraph (a)(2) of this section. Vessel personnel will decide into which wells tuna will be loaded. The observer will initially designate whether each set is ''dolphin-safe'' or not, based on his/her observation of the set. The observer will initially identify a vessel fish well as ''dolphin-safe'' if the first tuna loaded into the well during a trip was captured in a set in which no dolphin died or was seriously injured. The observer will initially identify a vessel fish well as ''non-dolphin-safe'' if the first tuna loaded into the well during a trip was captured in a set in which a dolphin died or was seriously injured. Any tuna loaded into a well previously designated ''non-dolphin-safe'' or ''mixed well'' is considered ''non-dolphin-safe'' tuna. Except as provided for in paragraph (a)(2) of this section, the observer will change the designation of a ''dolphin-safe'' well to ''non-dolphin-safe'' if any tuna are loaded into the well that were captured in a set in which a dolphin died or was seriously injured. The well designation ''dolphin-safe'' may change during a trip; however, a well designation of ''non-dolphin-safe'' cannot be changed for the duration of the trip.

(2) In the event that a set has been designated ''dolphin-safe'' by the observer, but late in the loading process dolphin mortality or serious injury is identified, the ''dolphin-safe'' designation of the set will change to ''non-dolphin-safe.'' If one or more of the wells into which the newly designated ''non-dolphin-safe'' tuna are loaded already contains ''dolphin-safe'' tuna loaded during a previous set, the observer will note in his or her trip records the well numbers and the estimated weight of such ''dolphin-safe'' tuna and designate such well(s) as ''mixed well(s).'' Once a well has been identified as ''non-dolphin-safe'' or ''mixed'' all tuna subsequently loaded into that well will be designated as ''non-dolphin-safe.'' When the contents of such a ''mixed well'' are received by a processor, the tuna will be weighed and separated according to the observer's report of the estimated weight of ''dolphin-safe'' and ''non-dolphin-safe'' tuna contained in that well.

(3) *Tuna tracking form*. The observer will keep an IATTC tuna tracking form upon which an entry will be made for each set that includes identification by well number of ''dolphin-safe,'' ''non-dolphin-safe,'' and ''mixed'' wells; weights by species composition, estimated tons loaded, set number, date of loading, trip number and dates, observer name, captain name, vessel name.

(i) The Captain, managing owner, or vessel agent of a purse seine vessel returning to port from a trip, any part of which included fishing in the ETP, must provide at least 48 hours notice of the vessel's intended place of landing, arrival time, and schedule of unloading to the Administrator, Southwest Region.

(ii) A NMFS representative may meet the vessel to receive the IATTC tuna tracking form(s) from the vessel captain and to monitor the handling of ''dolphin-safe'' and ''non-dolphin-safe'' tuna.

(iii) The Captain must submit the completed, signed IATTC tuna tracking form that covers all tuna on board to the NMFS representative in person, or by mail to the Administrator, Southwest Region, within 5 working days of the end of the trip.

(4) Tuna off-loaded to trucks, storage facilities or carrier vessels must be loaded or stowed in such a way as to maintain and safeguard the identification of the ''dolphin-safe'' or ''non-dolphin-safe'' designation of the tuna as it left the fishing vessel.

(b) *Tracking cannery operations*. (1) Whenever a tuna canning company is scheduled to receive a domestic or imported shipment of ETP-caught tuna for processing, the company must provide at least 48 hours notice of the location and arrival date and time of such a shipment, to the Administrator, Southwest Region, so that a NMFS representative can be present to monitor delivery and verify that ''dolphin-safe'' and ''non-dolphin-safe'' tuna are clearly identified and remain segregated.

(2) At the close of delivery activities, which may include weighing, boxing or containerizing, and transfer to cold storage or processing, the company must provide a copy of the processor's receiving report to the NMFS representative, if present. If a NMFS representative is not present, the company must submit a copy of the processor's receiving report to the Administrator, Southwest Region, by mail or fax within 5 working days. The processor's receiving report must contain, at a minimum: date of delivery, catcher vessel name and flag, trip number and dates, storage container number(s), ''dolphin-safe'' or ''non-dolphin-safe'' designation of each container, species, fish condition, and weight of tuna in each container.

(3) Tuna canning companies will report on a monthly basis the amounts of ETP-caught tuna that are removed from cold storage. This report may be submitted in conjunction with the monthly report required in paragraph (b)(5) of this section. This report must contain:

(i) The date of removal;

(ii) Storage container number(s) and ''dolphin-safe'' or ''non-dolphin-safe'' designation of each container; and

(iii) Details of the disposition of fish (for example, canning, sale, rejection, etc.).

(4) During canning activities, ''non-dolphin-safe'' tuna may not be mixed in any manner or at any time in its processing with any ''dolphin-safe'' tuna or tuna products and may not share the same storage containers, cookers, conveyers, tables, or other canning and labeling machinery.

(5) Canned tuna processors must submit a report to the Administrator, Southwest Region, of all tuna received at their processing facilities in each calendar month whether or not the tuna is actually canned or stored during that month. Monthly cannery receipt reports must be submitted electronically or by mail before the last day of the month following the month being reported. Monthly reports must contain the following information:

(i) Domestic receipts: species, condition (round, loin, dressed, gilled and gutted, other), weight in short tons to the fourth decimal, ocean area of capture (eastern tropical Pacific, western Pacific, Indian, eastern and western Atlantic, other), catcher vessel, trip dates, carrier name, unloading dates, and location of unloading.

(ii) Import receipts: In addition to the information required in paragraph (b)(5)(i) of this section, a copy of the FCO for each imported receipt must be provided.

(c) *Tracking imports*. All tuna products, except fresh tuna, that are imported into the United States must be accompanied by a properly certified FCO as required by § 216.24(f).

(d) *Verification requirements*.—(1) *Record maintenance*. Any exporter,

transshipper, importer, or processor of any tuna or tuna products containing tuna harvested in the ETP must maintain records related to that tuna for at least 3 years. These records include, but are not limited to: FCO and required certifications, any report required in paragraphs (a) and (b) of this section, invoices, other import documents, and trip reports.

(2) *Record submission*. Within 30 days of receiving a written request from the Administrator, Southwest Region, any exporter, transshipper, importer, or processor of any tuna or tuna products containing tuna harvesting in the ETP must submit to the Administrator any record required to be maintained under paragraph (d)(1) of this section.

(3) *Audits and spot-checks*. Upon request of the Administrator, Southwest Region, any such exporter, transshipper, importer, or processor must provide the Administrator, Southwest Region, timely access to all pertinent records and facilities to allow for audits and spot-checks on caught, landed, and processed tuna.

(e) *Confidentiality of proprietary information*. Information submitted to the Assistant Administrator under this section will be treated as confidential in accordance with NOAA Administrative Order 216–100 ''Protection of Confidential Fisheries Statistics.''

6. In subpart H, § 216.96 is added and reserved as follows:

§ 216.96 Official mark. [Reserved]

[FR Doc. 99–15004 Filed 6–9–99; 5:05 pm]

BILLING CODE 3510–22–F

Notices

Federal Register
Vol. 64, No. 113
Monday, June 14, 1999

This section of the FEDERAL REGISTER contains documents other than rules or proposed rules that are applicable to the public. Notices of hearings and investigations, committee meetings, agency decisions and rulings, delegations of authority, filing of petitions and applications and agency statements of organization and functions are examples of documents appearing in this section.

DEPARTMENT OF AGRICULTURE

Forest Service

National Urban and Community Forestry Advisory Council

AGENCY: Forest Service, USDA.

ACTION: Notice of meeting.

SUMMARY: The National Urban and Community Forestry Advisory Council will meet in Hartford, Connecticut, June 24–26, 1999. The purpose of the meeting is to discuss emerging issues in urban and community forestry.

DATES: The meeting will be held June 24–26, 1999.

ADDRESSES: The meeting will be held at the Hilton Hartford Hotel, 315 Trumbull Street, Hartford, Connecticut. A tour of local projects will be given on June 24 from 9:00 a.m. to 3:00 p.m.

Individuals who wish to speak at the meeting or to propose agenda items must send their names and proposals to Suzanne M. del Villar, Executive Assistant, National Urban and Community Forestry Advisory Council, 20628 Diane Drive, Sonora, CA 95370.

FOR FURTHER INFORMATION CONTACT: Suzanne M. del Villar, Cooperative Forestry Staff, (209) 536–9201.

SUPPLEMENTARY INFORMATION: The Challenge Cost-Share grant categories, identified by the Council, are advertised annually to solicit proposals for projects which would advance the knowledge of, and promote interest in, urban and community forestry. Pursuant to 5 U.S.C. 552b(c)(9)(B), the meeting will be closed from approximately 8:30 a.m. to 10:00 a.m. on June 26, in order for the Council to determine the categories for the 2000 Challenge Cost-Share grant program. Otherwise, the meeting is open to the public.

Persons who wish to bring urban and community forestry matters to the attention of the Council may file written statements with the Council staff before or after the meeting. Public input sessions will be provided and individuals who made written requests by June 11 will have the opportunity to address the Council at those sessions. Council discussion is limited to Forest Service staff and Council members.

Dated: June 8, 1999.

Dan Glickman,

Secretary.

[FR Doc. 99–15097 Filed 6–10–99; 3:14 pm]

BILLING CODE 3410–11–M

DEPARTMENT OF COMMERCE

Bureau of Export Administration

Offsets in Military Reports

ACTION: Proposed collection; comment request.

SUMMARY: The Department of Commerce, as part of its continuing effort to reduce paperwork and respondent burden, invites the general public and other Federal agencies to take this opportunity to comment on proposed and/or continuing information collections, as required by the Paperwork Reduction Act of 1995, Public Law 104–13 (44 U.S.C. 3506(c)(2)(A)).

DATES: Written comments must be submitted on or before August 13, 1999.

ADDRESSES: Direct all written comments to Linda Engelmeier, Departmental Clearance Officer, Office of the Chief Information Officer, Department of Commerce, Room 5327, 14th and Constitution Avenue, NW, Washington DC 20230 (or via the Internet at LEngelme@doc.gov).

FOR FURTHER INFORMATION CONTACT: Requests for additional information or copies of the information collection instrument(s) and instructions should be directed to Dawnielle Battle, BXA ICB Liaison, Department of Commerce, BXA Administration, Room 6881, 14th & Constitution Avenue, NW, Washington, DC 20230.

SUPPLEMENTARY INFORMATION:

I. Abstract

The Defense Production Act Amendments of 1992, Section 123 (P.L. 102–558), which amended Section 309 or the Defense Production Act of 1950, requires United States firms to furnish information regarding offset agreements exceeding $5,000,000 in value associated with sales of weapon systems or defense-related items to foreign countries. The information collected on offset transactions will be used to assess the cumulative effect of offset compensation practices on U.S. trade and competitiveness, as required by statute.

II. Method of Collection

Annual written report.

III. Data

OMB Number: 0694–0084.

Form Number: None.

Type of Review: Regular submission for extension of a currently approved collection.

Affected Public: Individuals, businesses or other for-profit and not-for-profit institutions.

Estimated Number of Respondents: 100.

Estimated Time Per Response: 10 hours per response.

Estimated Total Annual Burden Hours: 1,000.

Estimated Total Annual Cost: $0—no capital expenditures required.

IV. Request for Comments

Comments are invited on: (a) Whether the proposed collection of information is necessary for the proper performance of the functions of the agency, including whether the information shall have practical utility; (b) the accuracy of the agency's estimate of the burden (including hours and cost) of the proposed collection of information; (c) ways to enhance the quality, utility, and clarity of the information to be collected; and (d) ways to minimize the burden of the collection of information on respondents, including through the use of automated collection techniques or other forms of information technology.

Comments submitted in response to this notice will be summarized and/or included in the request for OMB approval of this information collection; they will also become a matter of public record.

Dated: June 7, 1999.

Linda Engelmeier,

Departmental Forms Clearance Officer, Office of the Chief Information Officer.

[FR Doc. 99–14983 Filed 6–11–99; 8:45 am]

BILLING CODE 3510–JT–P

DEPARTMENT OF COMMERCE

Bureau of Export Administration

Chemical Weapons Convention, Amendment to the Export Administration Regulations (End-Use Certificates and Advanced Notifications and Annual Reports)

ACTION: Proposed collection; comment request.

SUMMARY: The Department of Commerce, as part of its continuing effort to reduce paperwork and respondent burden, invites the general public and other Federal agencies to take this opportunity to comment on proposed and/or continuing information collections, as required by the Paperwork Reduction Act of 1995, Public Law 104–13 (44 U.S.C. 3506(c)(2)(A)).

DATES: Written comments must be submitted on or before August 13, 1999.

ADDRESSES: Direct all written comments to Linda Engelmeier, Departmental Clearance Officer, Office of the Chief Information Officer, Department of Commerce, Room 5327, 14th and Constitution Avenue, NW, Washington DC 20230 (or via the Internet at LEngelme@doc.gov).

FOR FURTHER INFORMATION CONTACT: Requests for additional information or copies of the information collection instrument(s) and instructions should be directed to Dawnielle Battle, Bureau of Export Administration Liaison, Room 6881, Department of Commerce, 14th and Constitution Avenue, NW, Washington, DC, 20230.

SUPPLEMENTARY INFORMATION:

I. Abstract

The Chemical Weapons Convention (CWC) is a multilateral arms control treaty that seeks to achieve an international ban on chemical weapons (CW). The CWC was signed by the United States in Paris on January 13, 1993, and was submitted by President Clinton to the United States Senate on November 23, 1993, for its advice and consent to ratification. The CWC prohibits, *inter alia,* the use, development, production, acquisition, stockpiling, retention, and direct or indirect transfer of chemical weapons.

Schedule 1 Notification and Report

Under part VI of the CWC Verification Annex, the United States is required to notify the Organization for the Prohibition of Chemical Weapons (OPCW), the international organization created to implement the CWC, at least 30 days before any transfer (export/import) of Schedule 1 chemicals to another State Party. The United States is also required to submit annual reports to the OPCW on all transfers of Schedule 1 Chemicals.

End-Use Certificates

Under parts VII and VIII of the CWC Verification Annex, the United States is required to obtain End-Use Certificates for transfers of Schedule 2 and 3 chemicals to Non-States Parties to ensure the transferred chemicals are only used for the purposes not prohibited under the Convention.

II. Method of Collection

Written Reports.

III. Data

OMB Number: 0694–0117.

Form Number: N/A.

Type of Review: Renewal of collection.

Affected Public: Individuals, businesses or other for-profit and not-for-profit institutions.

Estimated Number of Respondents: 134.

Estimated Time Per Response: 60 to 90 minutes per response.

Estimated Total Annual Burden Hours: 178 hours.

Estimated Total Annual Cost: $0—No capital expenditures are required.

IV. Request for Comments

Comments are invited on: (a) Whether the proposed collection of information is necessary for the proper performance of the functions of the agency, including whether the information shall have practical utility; (b) the accuracy of the agency's estimate of the burden (including hours and cost) of the proposed collection of information; (c) ways to enhance the quality, utility, and clarity of the information to be collected; and (d) ways to minimize the burden of the collection of information on respondents, including through the use of automated collection techniques or other forms of information technology. Comments submitted in response to this notice will be summarized and/or included in the request for OMB approval of this information collection; they will also become a matter of public record.

Dated: June 7, 1999.

Linda Engelmeier,

Departmental Forms Clearance Officer, Office of the Chief Information Officer.

[FR Doc. 99–14984 Filed 6–11–99; 8:45 am]

BILLING CODE 3510–33–P

DEPARTMENT OF COMMERCE

Foreign-Trade Zones Board

[Docket 28–99]

Foreign-Trade Zone 219—Yuma, AZ, Application for Subzone, Gowan Company, Yuma, AZ

An application has been submitted to the Foreign-Trade Zones Board (the Board) by the Yuma County Airport Authority, Inc., grantee of FTZ 219, requesting special-purpose subzone status for the manufacturing and warehousing facilities of Gowan Company (Gowan), located in Yuma, Arizona. The application was submitted pursuant to the provisions of the Foreign-Trade Zones Act, as amended (19 U.S.C. 81a–81u), and the regulations of the Board (15 CFR part 400). It was formally filed on May 27, 1999.

The Gowan Company has two sites with 450 employees in Yuma County, Arizona. The manufacturing facility (45.25 acres) is located at 12300 E. County 8th Street in Yuma, Arizona. The warehouse facility (26.96 acres) is located at 10760 South Avenue 7E in Yuma, Arizona. The Gowan plant is used for the manufacturing, processing and packaging of agrichemicals for crop protection in commercial agriculture, including insecticides, fungicides and insect growth regulators (primarily HTS 3808, duty rate ranges from duty-free to 6.5%). Components and materials sourced from abroad (representing about 80% of all parts consumed in manufacturing) include: esters of inorganic acids and organo-sulfur compounds (HTS 2920, 2930, 2940, duty rate ranges from duty-free to 10.7%). Some 25 percent of the plant's shipments are exported. FTZ procedures would exempt Gowan from Customs duty payments on the foreign components used in export production. On its domestic sales, Gowan would be able to choose the duty rates during Customs entry procedures that apply to finished agrichemicals (duty free to 6.5%) for the foreign inputs noted above. The request indicates that the savings from FTZ procedures would help improve the plant's international competitiveness.

In accordance with the Board's regulations, a member of the FTZ staff has been appointed examiner to investigate the application and report to the Board.

Public comment on the application is invited from interested parties. Submissions (original and 3 copies) shall be addressed to the Board's Executive Secretary at the address below. The closing period for their

receipt is August 13, 1999. Rebuttal comments in response to material submitted during the foregoing period may be submitted during the subsequent 15-day period (to August 30, 1999).

A copy of the application and the accompanying exhibits will be available for public inspection at each of the following locations:

U.S. Customs Port of Entry—San Luis, Highway 95 and International Border, San Luis, Arizona 85364

Office of the Executive Secretary, Foreign-Trade Zones Board, Room 3716, U.S. Department of Commerce 14th and Pennsylvania Avenue, N.W., Washington, D.C. 20230

Dated: May 28, 1999.

Dennis Puccinelli,

Acting Executive Secretary

[FR Doc. 99–15027 Filed 6–11–99; 8:45 am]

BILLING CODE 3510–DS–P

DEPARTMENT OF COMMERCE

National Institute of Standards and Technology

Surveys, Focus Groups, and Other Customer Service Data Collections

ACTION: Proposed collection; comment request.

SUMMARY: The Department of Commerce, as part of its continuing effort to reduce paperwork and respondent burden, invites the general public and other Federal agencies to take this opportunity to comment on proposed and/or continuing information collections, as required by the Paperwork Reduction Act of 1995, Public Law 104–13 (44 U.S.C. 3506(c)(2)(A)).

DATES: Written comments must be submitted on or before August 13, 1999.

ADDRESSES: Direct all written comments to Linda Engelmeier, Departmental Forms Clearance Officer, Department of Commerce, Room 5033, 14th and Constitution Avenue, NW, Washington, DC 20230 (or via the Internet at LEngelme@doc.gov).

FOR FURTHER INFORMATION CONTACT: Requests for additional information or copies of the information collection instrument(s) and instructions should be directed to Phyllis Boyd, National Institute of Standards and Technology, 100 Bureau Drive, Stop 3220, Gaithersburg, MD, 20899–3220, (301) 975–4062.

SUPPLEMENTARY INFORMATION:

I. Abstract

In accordance with Executive Order 12862, the National Institute of Standards and Technology (NIST), a non-regulatory agency of the Department of Commerce, proposes to conduct a number of surveys—both quantitative and qualitative—designed to determine the kind and the quality of products, services, and information our key customers want and expect, as well as their satisfaction with and awareness of existing products, services, and information. In addition, NIST proposes other customer service satisfaction data collection that include, but may not be limited to focus groups, reply cards that accompany product distributions, and web-based surveys and dialogue boxes that offer customers the opportunity to express their level of satisfaction with NIST products, services, and information and for ongoing dialogue with NIST. NIST will limit its inquiries to data collections that solicit strictly voluntary opinions and will not collect information that is required or regulated. Steps will be taken to assure anonymity of respondents in each activity covered under this request. NIST is requesting generic approval for fiscal years FY2000, FY2001, and FY2002.

II. Method of Collection

NIST will collect this information by electronic means, as well as by mail, fax, telephone, and person-to-person.

III. Data

OMB Number: N/A.

Form Number: N/A.

Type of Review: Regular Submission.

Affected Public: NIST customers, which may include businesses, academic institutions, associations, researchers, and other individuals, organizations, or institutions that deal with or wish to express an opinion about NIST products, services, or information.

Estimated Number of Respondents: Annually, approximately 12,000.

Estimated Time Per Response: Varied, dependent upon the data collection. The response time may vary from less than two minutes for a response card to up to two hours for focus group participation. The average response time is expected to be less than 30 minutes.

Estimated Total Annual Burden Hours: FY 2000—3,200 hours, FY 2001—3,067, FY 2002—2,800 hours.

Estimated Total Annual Cost: The cost to the respondent for FY 2000 is estimated to be $64,736, for FY 2001 is estimated to be $62,045, and for FY 2002 is estimated to be $56,644, based on a median hourly salary $20.23. (Occupational Employment Statistics—Bureau of Labor Statistics 1997 National Occupational Employment and Wage Data Professional, Paraprofessional, and Technical Occupations, $20.23 represents the median hourly wage when averaging the full-time wage and salary earnings for OES 24199—All Other Physical Scientists-median hourly wage: $22.85—http://stats.bls.gov/oes/national/oes24199.htm and OES 21999 All Other Management Support Workers—median hourly wage: $17.61—http://stats.bls.gov/oes/national/oes21999.htm, two categories of individuals most likely to respond to information requests). No capital expenditures are required.

Respondent's Obligation: Voluntary.

IV. Request for Comments

Comments are invited on: (a) Whether the proposed collection of information is necessary for the proper performance of the functions of the agency, including whether the information shall have practical utility; (b) the accuracy of the agency's estimate of the burden (including hours and cost) of the proposed collection of information; (c) ways to enhance the quality, utility, and clarity of the information to be collected; and (d) ways to minimize the burden of the collection of information on respondents, including automated collection techniques or other forms of information technology.

Comments submitted in response to this notice will be summarized and included in the request for OMB approval of this information collection. They also will become a matter of public record.

Dated: June 7, 1999.

Linda Engelmeier,

Departmental Forms Clearance Officer, Office of the Chief Information Officer.

[FR Doc. 99–14982 Filed 6–11–99; 8:45 am]

BILLING CODE 3510–13–P

DEPARTMENT OF DEFENSE

[OMB Control Number 0704–0214]

Information Collection Requirement; Defense Federal Acquisition Regulation Supplement; Special Contracting Methods

AGENCY: Department of Defense (DoD).

ACTION: Notice and request for comments regarding a proposed extension of an approved information collection requirement.

SUMMARY: In compliance with Section 3506(c)(2)(A) of the Paperwork Reduction Act of 1995 (44 U.S.C. Chapter 35), DoD announces the proposed extension of a public information collection requirement and

seeks public comment on the provisions thereof. We invite comments on: (a) Whether the proposed collection of information is necessary for the paper performance of the functions of the agency, including whether the information will have practical utility; (b) the accuracy of the estimate of the burden of the proposed information collection; (c) ways to enhance the quality, utility, and clarity of the information to be collected; and (d) ways to minimize the burden of the information collection on respondents, including the use of automated collection techniques or other forms of information technology. This information collection requirement is currently approved by the Office of Management and Budget (OMB) for use through January 31, 2000. DoD proposes that OMB extend its approval for use through January 31, 2003.

DATES: We will consider all comments received by August 13, 1999.

ADDRESSES: Send written comments and recommendations on the proposed information collection requirement to: Defense Acquisition Regulations Council, Attn: Mr. Michael Pelkey, PDUSD (A&T) DP (DAR), IMD 3D139, 3062 Defense Pentagon, Washington, DC 20301–3062. Telefax (703) 602–0350.

E-mail comments submitted over the Internet should be addressed to: dfars@acq.osd.mil.

Please cite OMB Control Number 0704–0214 in all correspondence related to this issue. E-mail comments should cite OMB Control Number 0704–0214 in the subject line.

FOR FURTHER INFORMATION CONTACT: Mr. Michael Pelkey, at (703) 602–0131. A copy of this information collection requirement is available electronically via the Internet at: http://www.acq.osd.mil/dp/dars/dfars.html.

You may obtain paper copies from Mr. Michael Pelkey, PDUSD (A&T) DP (DAR), IMD 3D139, 3062 Defense Pentagon, Washington, DC 20301–3062.

SUPPLEMENTARY INFORMATION:

Title Associated from, and OMB Number: Defense Federal Acquisition Regulation Supplement (DFARS) Part 217, Special Contracting Methods, and related provisions and clauses at DFARS 252.217–7012, Liability and Insurance, DFARS 252.217–7018, Change in Plant Location-Bakery and Dairy Products, DFARS 252.217–7026, Identification of Sources of Supply, and 252.217–7028, Over and Above Work; OMB Control Number 0704–0214.

Needs and Uses: DFARS Part 217 prescribes policies and procedures for acquiring supplies and services by special contracting methods. Contracting officers use the required information as follows:

The clause at DFARS 252.217–7012 is used in master agreements for repair and alternation of vessels. Contracting officers use the information required by paragraph (d) of the clause of determine that the contractor is adequately insured. This requirement supports prudent business practice because it limits the Government's liability as a related party to the work the contractor performs. Contracting officers use the information required by paragraphs (f) and (g) of the clause to keep informed of lost or damaged property for which the Government is liable, and to determine the appropriate course of action for replacement or repair of the property.

Contracting officers use the information required by the clause at DFARS 252.217–7018 to determine the place of performance under contracts for bakery and dairy products. This represents prudent business practice because it helps to ensure that food products are manufactured and processed in sanitary facilities.

Contracting officers use the information required by the provision at DFARS 252.217–7026 to identify the apparently successful offeror's sources of supply so that competition can be enhanced in future acquisitions. This collection complies with 10 U.S.C. 2384, Supplies: identification of supplier and sources, which requires the contractor to identify the actual manufacturer or all sources of supply for supplies furnished under contract to DoD.

Contracting officers use the information required by the clause at 252.215–7028 to determine the extent of ''over and above'' work before the work commences. This requirement supports prudent business practice because it allows the Government to review the need for pending work before the contractor begins performance

Affected Public: Businesses or other for-profit and not-for-profit institutions.

Annual Burden Hours: 1,372,401.

Number of Responses: 95,520.

Responses Per Respondent: 1.3.

Average Burden Per Response: 14.4 hours.

Frequency: On occasion.

Summary of Information Collection

Each provision or clause requires the offeror or contractor to submit certain information:

a. Paragraph (d)(3) of the clause at DFARS 252.217–7012 requires the contractor to show evidence of insurance under a master agreement for vessel repair and alteration.

b. Paragraphs (f) and (g) of the clause at DFARS 252.217–7018 require the contractor to notify the contracting officer of any property loss or damage for which the Government is liable, and to submit to the contracting officer a request for reimbursement of the cost of replacement or repair with supporting documentation.

c. Paragraphs (b) and (c) of the clause at DFARS 252.217–7018 require the offeror or contractor to obtain contracting officer approval before changing the place of performance of a contract for bakery or dairy products.

d. The provision at 252.217–7026 requires the apparently successful offeror to identify its sources of supply.

e. Paragraphs (c) and (e) of the clause at DFARS 252.217–7028 require the contractor to submit to the contracting officer a work request and a proposal for ''over and above'' work.

Michele P. Peterson,

Executive Editor, Defense Acquisition Regulations Council.

[FR Doc. 99–15031 Filed 6–11–99; 8:45 am]

BILLING CODE 5000–04–M

DEPARTMENT OF DEFENSE

Office of the Secretary

Submission for OMB Review; Comment Request

ACTION: Notice.

The Department of Defense has submitted to OMB for clearance, the following proposal for collection of information under the provisions of the Paperwork Reduction Act (44 U.S.C. Chapter 35).

Title, Form Number, and OMB Number: TRICARE Senior Prime Enrollment Application Form; OMB Number 0720–0018.

Type of Request: Reinstatement.

Number of Respondents: 12,000.

Responses Per Respondent: 1.

Annual Responses: 12,000.

Average Burden Per Response: 20 minutes.

Annual Burden Hours: 4,000.

Needs and Uses: This information collection is a requirement for TRICARE Senior Prime, a joint demonstration project of military managed health care conducted by the Department of Defenses (DoD) and the Department of Health and Human Services (HHS). Under this demonstration, authorized by the Balanced Budget Act of 1997, DoD will offer Medicare-eligible military retirees and their dependents enrollment in a DoD-operated managed health care program. Medicare-eligible beneficiaries will be offered the

opportunity to enroll at selected Medical Treatment Facilities (MTFs) in a managed care program modeled after the existing TRICARE Prime benefit. Medicare will reimburse DoD on a capitated basis for health care services it provides to the enrolled beneficiaries. Dual-eligible beneficiaries seeking enrollment in the program will be required to fill out an enrollment application which will provide information pertaining to eligibility for the program, personal information for identification purposes, and information on other health insurance.

Affected Public: Individuals or households.

Frequency: On occasion.

Respondents Obligation: Required to obtain or retain benefits.

OMB Desk Officer: Ms. Allison Eydt.

Wrtten comments and recommendations on the proposed information collection should be sent to Ms. Eydt at the Office of Management and Budget, Desk Officer for DoD Health Affairs, Room 10235, New Executive Office Building, Washington, DC 20503.

DOD Clearance Officer: Mr. Robert Cushing.

Written requests for copies of the information collection proposal should be sent to Mr. Cushing, WHS/DIOR, 1215 Jefferson Davis Highway, Suite 1204, Arlington, VA 22202–4302.

Dated: June 7, 1999.

Patricia L. Toppings,

Alternate OSD Federal Register Liaison Officer, Department of Defense.

[FR Doc. 99–14939 Filed 6–11–99; 8:45 am]

BILLING CODE 5001–10–M

DEPARTMENT OF DEFENSE

Office of the Secretary

Submission for OMB Review; Comment Request

ACTION: Notice.

The Department of Defense has submitted to OMB for clearance, the following proposal for collection of information under the provisions of the Paperwork Reduction Act (44 U.S.C. Chapter 35).

Title and OMB Number: CCAF Alumni Survey; OMB Number 0701–0136.

Type of Request: Reinstatement.

Number of Respondents: 500.

Responses per Respondent: 1.

Annual Responses: 500.

Average Burden per Response: 20 minutes.

Annual Burden Hours: 167.

Needs and Uses: The information collection is necessary to determine how effectively the Community College of the Air Force (CCAF) is meeting its mission and also identify areas needing improvement. Survey results will provide data on the usefulness and acceptance of the CCAF degree in the civilian sector. Documenting the institution's effectiveness is also required to maintain CCAF's regional accreditation. Respondents will be separated and retired CCAF graduates. Survey results will be compiled and evaluated at the CCAF Administrative Center at Maxwell Air Force Base, Alabama. While results will be used primarily in-house to make program improvements, findings may be publicized in the Air Force and civilian education communities.

Affected Public: Individuals or households.

Frequency: On occasion.

Respondents Obligation: Voluntary.

OMB Desk Officer: Mr. Edward C. Springer.

Written comments and recommendations on the proposed information collection should be sent to Mr. Springer at the Office of Management and Budget, Desk Officer for DoD, Room 10236, New Executive Office Building, Washington, DC 20503.

DOD Clearance Officer: Mr. Robert Cushing.

Written requests for copies of the information collection proposal should be sent to Mr. Cushing, WHS/DIOR, 1215 Jefferson Davis Highway, Suite 1204, Arlington, VA 22202–4302.

Dated: June 8, 1999.

Patricia L. Toppings,

Alternate OSD Federal Register Liaison Officer, Department of Defense.

[FR Doc. 99–14945 Filed 6–11–99; 8:45 am]

BILLING CODE 5001–10–M

DEPARTMENT OF DEFENSE

Office of the Secretary

Submission for OMB Review; Comment Request

ACTION: Notice.

The Department of Defense has submitted to OMB for clearance, the following proposal for collection of information under the provisions of the Paperwork Reduction Act (44 U.S.C. Chapter 35).

Title, Form Number, and OMB Number: DoD Request for Personnel Security Investigation; DD Form 1879; OMB Number 0704–0384.

Type of Request: Reinstatement.

Number of Respondents: 32,164.

Responses per Respondent: 1.

Annual Responses: 32,164.

Average Burden per Response: 15 minutes.

Annual Burden Hours: 8,041.

Needs and Uses: The information is used to request Single Scope Background Investigations (SSBIs), Expanded National Agency Checks (ENACs), SSBI Periodic Reinvestigations (PRs), or Special Investigative Inquiries (SIIs). It will accompany the Standard Form 85–P, ''Questionnaire for Public Trust Position,'' or Special Investigative Inquiries (SIIs). It will accompany the Standard Form 85–P, ''Questionnaire for Public Trust Position,'' or Standard Form 85–P, ''questionnaire for National Security Position,'' which will be used by the Defense Security Service for the purpose of conducting SSBIs, ENACs, PRs, and SIIs. These provide the basis for determination of a person's eligibility for access to classified information, appointment to a sensitive position, assignment to duties that require a personnel security or trustworthiness determination, continuing eligibility for retention of a security clearance, or assignment to other sensitive duties.

Affected Public: Individuals or householes; business or other for-profit.

Frequency: On occasion.

Respondent's Obligation: Voluntary.

OMB Desk Officer: Mr. Edward C. Springer.

Written comments and recommendations on the proposed information collection should be sent to Mr. Springer at the Office of Management Budget, Desk Officer for DoD, Room 10236, New Executive Office Building, Washington, DC 20503.

DOD Clearance Officer: Mr. Robert Cushing.

Written requests for copies of the information collection proposal should be sent to Mr. Cushing, WHS/DIOR, 1215 Jefferson Davis Highway, Suite 1204, Arlington, VA 22202–4302.

Dated: June 8, 1999.

Patricia L. Toppings,

Alternate OSB Federal Register Liaison Officer, Department of Defense.

[FR Doc. 99–14946 Filed 6–11–99; 8:45 am]

BILLING CODE 5001–10–M

DEPARTMENT OF DEFENSE

Office of the Secretary

Submission for OMB Review; Comment Request

ACTION: Notice.

The Department of Defense has submitted to OMB for clearance, the

following proposal for collection of information under the provisions of the Paperwork Reduction Act (44 U.S.C. Chapter 35).

Title, Associated Form, and OMB Number: Candidate Procedures; USMA Forms 21–26, 21–23, 21–25, 21–16, 5–520, 5–518, 5–497, FL 481, FL 546, FL 5–2, FL 5–26, FL 480–1, FL 520, 21–14, 21–8; OMB Number 0702–0061.

Type of Request: Reinstatement.

Number of Respondents: 85,225.

Responses Per Respondent: 1.

Annual Responses: 85,225.

Average Burden Per Response: 12.4 minutes (average).

Annual Burden Hours: 17,603.

Needs and Uses: West Point candidates provide personal background information which allows the West Point Admissions Committee to make subjective on academic and non-academic experiences to determine qualification for admission to West Point. Approximately 12,000 to 13,000 applicant files are opened each year and about 4,500 are evaluated by the Admissions Committee during each admissions cycle. Data are also used by West Point's Office of Institutional Research for correlation with success in graduation and military careers.

Affected Public: Individuals or households.

Frequency: On occasion.

Respondent's Obligation: Required to obtain or retain benefits.

OMB Desk Officer: Mr. Edward C. Springer.

Written comments and recommendations on the proposed information collection should be sent to Mr. Springer at the Office of Management and Budget, Desk Officer for DoD, Room 10236, New Executive Office Building, Washington, DC 20503.

DOD Clearance Officer: Mr. Robert Cushing.

Written requests for copies of the information collection proposal should be sent to Mr. Cushing, WHS/DIOR, 1215 Jefferson Davis Highway, Suite 1204, Arlington, VA 22202–4302.

Dated: June 8, 1999.

Patricia L. Toppings,

Alternate OSD Federal Register Liaison Officer, Department of Defense.

[FR Doc. 99–14947 Filed 6–11–99; 8:45 am]

BILLING CODE 5000–10–M

DEPARTMENT OF DEFENSE

Office of the Secretary

[Transmittal No. 99–18]

36(b)(1) Arms Sales Notification

AGENCY: Department of Defense, Defense Security Cooperation Agency.

ACTION: Notice.

SUMMARY: The Department of Defense is publishing the unclassified text of a section 36(b)(1) arms sales notification. This is published to fulfill the requirements of section 155 of Public Law 104–164 dated 21 July 1996.

FOR FURTHER INFORMATION CONTACT: Ms. J. Hurd, DSCA/COMPT/RM, (703) 604–6575. The following is a copy of a letter to the Speaker of the House of Representatives, Transmittal 99–18, with attached transmittal, policy justification, and Sensitivity of Technology.

Dated: June 7, 1999.

L.M. Bynum,

Alternate OSD Federal Register Liaison Officer, Department of Defense.

BILLING CODE 5001–10–M

DEFENSE SECURITY COOPERATION AGENCY

WASHINGTON, DC 20301-2800

26 MAY 1999
In reply refer to:
I-99/06053

Honorable J. Dennis Hastert
Speaker of the House of
Representatives
Washington, D.C. 20515-6501

Dear Mr. Speaker:

Pursuant to the reporting requirements of Section 36(b)(1) of the Arms Export Control Act, we are forwarding herewith Transmittal No. 99-18, concerning the Department of the Army's proposed Letter(s) of Offer and Acceptance (LOA) to the Taipei Economic and Cultural Representative Office for defense articles and services estimated to cost $23 million. Soon after this letter is delivered to your office, we plan to notify the news media.

Sincerely,

A.R. KELTZ
ACTING DIRECTOR

Attachments

Same ltr to: House Committee on International Relations
Senate Committee on Appropriations
Senate Committee on Foreign Relations
House Committee on National Security
Senate Committee on Armed Services
House Committee on Appropriations

Transmittal No. 99-18

Notice of Proposed Issuance of Letter of Offer
Pursuant to Section 36(b)(1)
of the Arms Export Control Act

(i) **Prospective Purchaser**: Taipei Economic and Cultural Representative Office (TECRO) in the United States pursuant to P.L. 96-8

(ii) **Total Estimated Value**:

Major Defense Equipment*	$ 22 million
Other	$ 1 million
TOTAL	$ 23 million

(iii) **Description of Articles or Services Offered**: Two hundred forty AGM-114K3 HELLFIRE II Air-to-Surface Anti-Armor missiles, containers, spare parts, support equipment, publications, and other related elements of logistics support.

(iv) **Military Department**: Army YVF

(v) **Sales Commission, Fee, etc., Paid, Offered, or Agreed to be Paid**: None

(vi) **Sensitivity of Technology Contained in the Defense Article or Defense Services Proposed to be Sold**: See Annex attached.

(vii) **Date Report Delivered to Congress**: 26 MAY 1999

* as defined in Section 47(6) of the Arms Export Control Act.

POLICY JUSTIFICATION

Taipei Economic and Cultural Representative Office in the United States - HELLFIRE II Air-to-Surface Anti-Armor Missiles

The Taipei Economic and Cultural Representative Office (TECRO) in the United States has requested a possible sale of 240 AGM-114K3 HELLFIRE II Air-to-Surface Anti-Armor missiles, containers, spare parts, support equipment, publications, and other related elements of logistics support. The estimated cost is $23 million.

This proposed sale is consistent with United States law and policy, as expressed in Public Law 96-8.

The recipient will use these missiles on its AH-1W Super Cobra helicopters and OH-58D KIOWA helicopters. The missiles will enhance the recipient's anti-armor capabilities. The recipient, which already has HELLFIRE missiles in its inventory, will have no difficulty absorbing these additional missiles.

The proposed sale of this equipment and support will not affect the basic military balance in the region.

The prime contractor will be Lockheed Martin Electronics and Missiles, Orlando, Florida. There are no offset agreements proposed to be entered into in connection with this potential sale.

Implementation of this proposed sale will not require the assignment of any additional U.S. Government personnel or contractor representatives to the recipient.

There will be no adverse impact on U.S. defense readiness as a result of this proposed sale.

Transmittal No. 99-18

Notice of Proposed Issuance of Letter of Offer
Pursuant to Section 36(b)(1)
of the Arms Export Control Act

Annex
Item No. vi

(vi) Sensitivity of Technology:

1. The AGM-114K3 HELLFIRE air-to-surface missile hardware and documentation are unclassified. Missile performance parameters and characteristics, including susceptibility to countermeasures, are classified up to Secret and considered very sensitive. Missile hardware is considered sensitive and knowledge of the warhead timing mechanism would be useful in development of countermeasures. Technology contained within the missile is sensitive and Unclassified. The sensitivity of the system is primarily in the software programs which enable the missile to operate in a countermeasures environment. Training, maintenance, operations and related documentation are unclassified and not considered sensitive.

2. Missile design features minimize the possibility of reverse engineering U.S. capabilities.

3. If a technologically advanced adversary were to obtain knowledge of the specific hardware in this sale, the information could be used to develop countermeasures which might reduce weapon system effectiveness or be used in the development of a system with similar or advance capabilities.

4. This sale is necessary in furtherance of the U.S. foreign policy and national security objectives outlined in the Policy Justification. Moreover, the benefits to be derived from this sale, as outlined in the Policy Justification, outweigh the potential damage that could result if the sensitive technology were revealed to unauthorized persons.

[FR Doc. 99–14949 Filed 6–11–99; 8:45 am]
BILLING CODE 5001–10–C

DEPARTMENT OF DEFENSE

Office of the Secretary

[Transmittal No. 99–19]

36(b)(1) Arms Sales Notification

AGENCY: Department of Defense, Defense Security Cooperation Agency.

ACTION: Notice.

SUMMARY: The Department of Defense is publishing the unclassified text of a section 36(b)(1) arms sales notification. This is published to fulfill the requirements of section 155 of Public Law 104–164 dated 21 July 1996.

FOR FURTHER INFORMATION CONTACT: Ms. J. Hurd, DSCA/COMPT/RM, (703) 604–6575. The following is a copy of a letter to the Speaker of the House of Representatives, Transmittal 99–19, with attached transmittal, policy justification, and Sensitivity of Technology.

Dated: June 7, 1999.

L.M. Bynum,

Alternate OSD Federal Register Liaison Officer, Department of Defense.

BILLING CODE 5001–10–M

DEFENSE SECURITY COOPERATION AGENCY

WASHINGTON, DC 20301-2800

26 MAY 1999
In reply refer to:
I-99/06054

Honorable J. Dennis Hastert
Speaker of the House of
Representatives
Washington, D.C. 20515-6501

Dear Mr. Speaker:

Pursuant to the reporting requirements of Section 36(b)(1) of the Arms Export Control Act, we are forwarding herewith Transmittal No. 99-19, concerning the Department of the Army's proposed Letter(s) of Offer and Acceptance (LOA) to the Taipei Economic and Cultural Representative Office for defense articles and services estimated to cost $64 million. Soon after this letter is delivered to your office, we plan to notify the news media.

Sincerely,

A.R. KELTZ
ACTING DIRECTOR

Attachments

Same ltr to: House Committee on International Relations
Senate Committee on Appropriations
Senate Committee on Foreign Relations
House Committee on National Security
Senate Committee on Armed Services
House Committee on Appropriations

Transmittal No. 99-19

Notice of Proposed Issuance of Letter of Offer
Pursuant to Section 36(b)(1)
of the Arms Export Control Act

(i) **Prospective Purchaser**: Taipei Economic and Cultural Representative Office (TECRO) in the United States pursuant to P.L. 96-8

(ii) **Total Estimated Value**:

Major Defense Equipment*	$ 1 million
Other	$ 63 million
TOTAL	$ 64 million

(iii) **Description of Articles or Services Offered**: Five exportable AN/VRC-92E SINCGARS radio systems, five Commercial Off-the Shelf/Non-Developmental Item (COTS/NDI) Intelligence Electronic Warfare (IEW) systems (a mobile intercept direction finding system with high frequency skywave intercept, direction finding and jamming capability that is shelter configured on a High Mobility Multi-purpose Wheeled Vehicles (HMMWV)) to be provided by a commercial contractor, five HMMWV, spare and repair parts, support equipment, publications, personnel training and training equipment, U.S. Government and contractor engineering and technical services, Quality Assurance Teams, and other related elements of logistics support.

(iv) **Military Department**: Army (YVD)

(v) **Sales Commission, Fee, etc., Paid, Offered, or Agreed to be Paid**: None

(vi) **Sensitivity of Technology Contained in the Defense Article or Defense Services Proposed to be Sold**: See Annex attached

(vii) **Date Report Delivered to Congress**: 26 MAY 1999

* as defined in Section 47(6) of the Arms Export Control Act.

POLICY JUSTIFICATION

Taipei Economic and Cultural Representative Office (TECRO) in the United States - SINCGARS Radio Systems and Commercial Off-the-Shelf/Non-Developmental Item Intelligence Electronic Warfare Systems

The Taipei Economic and Cultural Representative Office (TECRO) in the United States has requested a possible sale of five exportable AN/VRC-92E SINCGARS radio systems, five Commercial Off-the Shelf/Non-Developmental Item (COTS/NDI) Intelligence Electronic Warfare (IEW) systems (a mobile intercept direction finding system with high frequency skywave intercept, direction finding and jamming capability that is shelter configured on a High Mobility Multi-purpose Wheeled Vehicles (HMMWV)) to be provided by a commercial contractor, five HMMWV, spare and repair parts, support equipment, publications, personnel training and training equipment, U.S. Government and contractor engineering and technical services, Quality Assurance Teams, and other related elements of logistics support. The estimated cost is $64 million.

This proposed sale is consistent with United States law and policy, as expressed in Public Law 96-8.

The proposed sale of this equipment will enable the recipient to intercept and jam offensive communications and to protect their own communications from being compromised. The recipient will use the COTS/NDI as well as the IEW leased equipment to equip an experimental IEW ground force units. The recipient will have no difficulty absorbing this equipment into its armed forces.

The proposed sale of this equipment and support will not affect the basic military balance in the region.

At this time, a contractor has not been selected for the COTS/NDI system. There are no offset agreements proposed to be entered into in connection with this potential sale.

The number of U.S. Government personnel and contractor representatives required in-country to support the program will be determined in joint negotiations as the program proceeds through the development, production and equipment installation phases.

There will be no adverse impact on U.S. defense readiness as a result of this proposed sale.

Transmittal No. 99-19

Notice of Proposed Issuance of Letter of Offer Pursuant to Section 36(b)(1) of the Arms Export Control Act

Annex
Item No. vi

(vi) Sensitivity of Technology:

1. The Commercial Off-the-Shelf/Non-Developmental Item (COTS/NDI) multi-station, ground based, electronic attack, intercept and Direction Finding system will be integrated in accordance to the classified Performance Specification for ACEWS to support a Foreign Military Sales requirement. The COTS/NDI Intelligence and Electronic Warfare (IEW) system will consist of Communications Intelligence/Direction Finding subsystems and jamming subsystems. All subsystems will be ground based. A High Frequency antenna array and the OE-317A antenna will also be part of the COTS/NDI IEW system. This system will be a non-standard procurement. The system does not have an assigned National Stock Number and is not used by the U.S. Armed Forces.

2. There will be no U.S. Government COMSEC equipment in the COTS/NDI IEW system. An exportable version of AN/VRC-92E SINCGARS, will be integrated into the COTS/NDI IEW system. The exportable SINCGARS receiver-transmitter, contains commercial encryption algorithms, not the same COMSEC that is used for the U.S. Army version SINCGARS. Other exportable commercial encryption devices may be utilized for the data link communications in the COTS/NDI IEW system.

3. A determination has been made that the recipient country can provide substantially the same degree of protection for the sensitive technology being released as the U.S. Government. This sale is necessary in furtherance of the U.S. foreign policy and national security objectives outlined in the Policy Justification.

[FR Doc. 99–14950 Filed 6–11–99; 8:45 am]
BILLING CODE 5001–10–C

DEPARTMENT OF DEFENSE

Office of the Secretary

Meeting of the Defense Policy Board Advisory Committee Panel on Commercialization and Globalization in the U.S. Defense Establishment

AGENCY: Department of Defense, Defense Policy Board Advisory Committee.

ACTION: Notice.

SUMMARY: The Defense Policy Board Advisory Committee Panel on Commercialization and Globalization in the U.S. Defense Establishment will meet in closed session at the Pentagon on June 23, 1999, from 0900 to 1200. The purpose of the meeting is to provide the Secretary of Defense with independent, informed advice on major matters of defense policy. The Board will hold classified discussions on national security matters.

In accordance with Section 10(d) of the Federal Advisory Committee Act, Public Law No. 92–463, as amended [5 U.S.C. App II (1982)], it has been determined that this meeting concerns matters listed in 5 U.S.C. 552B (c)(1)(1982), and that accordingly this meeting will be closed to the public.

FOR FURTHER INFORMATION CONTACT: CDR Randall Lovdahl, USN, 703–697–4557.

Dated: June 7, 1999.

L.M. Bynum,

Alternate OSD Federal Register Liaison Officer, Department of Defense.

[FR Doc. 99–14952 Filed 6–11–99; 8:45 am]

BILLING CODE 5001–10–P

DEPARTMENT OF DEFENSE

Office of the Secretary

Meeting of the DOD Advisory Group on Electron Devices

AGENCY: Department of Defense, Advisory Group on Electron Devices.

ACTION: Notice.

SUMMARY: Working Group C (Electro-Optics) of the DoD Advisory Group on Electron Devices (AGED) announces a closed session meeting.

DATES: The meeting will be held at 0900, Thursday, July 1, 1999.

ADDRESSES: The meeting will be held at Palisades Institute for Research Services, 1745 Jefferson Davis Highway, Suite 500, Arlington, VA 22202.

FOR FURTHER INFORMATION CONTACT: Elise Rabin, AGED Secretariat, 1745 Jefferson Davis Highway, Crystal Square Four, Suite 500, Arlington, Virginia 22202.

SUPPLEMENTARY INFORMATION: The mission of the Advisory Group is to provide advice to the Under Secretary of Defense for Acquisition and Technology, to the Director of Defense Research and Engineering (DDR&E), and through the DDR&E to the Director, Defense Advanced Research Projects Agency and the Military Departments in planning and managing an effective and economical research and development program in the area of electron devices.

The Working Group C meeting will be limited to review of research and development programs which the Military Departments propose to initiate with industry, universities or in their laboratories. This opto-electronic device area includes such programs as imaging device, infared detectors and lasers. The review will include details of classified defense programs throughout.

In accordance with Section 10(d) of Public Law 92–463, as amended, (5 U.S.C. App. § 10(d)(1994)), it has been determined that this Advisory Group meeting concerns matters listed in 5 U.S.C. 552b(c)(1)(1994), and that accordingly, this meeting will be closed to the public.

Dated: June 8, 1999.

L.M. Bynum,

Alternate OSD Federal Register Liaison Officer, Department of Defense.

[FR Doc. 99–14940 Filed 6–11–99; 8:45 am]

BILLING CODE 5001–10–M

DEPARTMENT OF DEFENSE

Office of the Secretary.

Meeting of the DOD Advisory Group on Electron Devices

AGENCY: Department of Defense, Advisory Group on Electron Devices.

ACTION: Notice.

SUMMARY: Working Group A (Microwave Devices) of the DoD Advisory Group on Electron Devices (AGED) announces a closed session meeting.

DATES: The meeting will be held at 0900, Tuesday, July 20, 1999.

ADDRESSES: The meeting will be held at Palisades Institute for Research Services, 1745 Jefferson Davis Highway, Suite 500, Arlington, VA 22202.

FOR FURTHER INFORMATION CONTACT: David Cox, AGED Secretariat, 1745 Jefferson Davis Highway, Crystal Square Four, Suite 500, Arlington, Virginia 22202.

SUPPLEMENTARY INFORMATION: The mission of the Advisory Group is to provide advice to the Under Secretary of Defense for Acquisition and Technology, to the Director of Defense Research and Engineering (DDR&E), and through the DDR&E to the Director, Defense Advanced Research Projects Agency (ARPA) and the Military Departments in planning and managing an effective and economical research and development program in the area of electron devices.

The Working Group A meeting will be limited to review of research and development programs which the Military Departments propose to initiate with industry, universities or in their laboratories. This microwave device area includes programs on developments and research related to microwave tubes, solid state microwave devices, electronic warfare devices, millimeter wave devices, and passive devices. The review will include details of classified defense programs throughout.

In accordance with Section 10(d) of Public Law 92–463, as amended, (5 U.S.C. App. Section 10(d) (1994)), it has been determined that this Advisory Group meeting concerns matters listed in 5 U.S.C. 552b(c)(1) (1994), and that accordingly, this meeting will be closed to the public.

Dated: June 8, 1999.

L.M. Bynum,

Alternate OSD Federal Register Liaison Officer, Department of Defense.

[FR Doc. 99–14941 Filed 6–11–99; 8:45 am]

BILLING CODE 5001–10–M

DEPARTMENT OF DEFENSE

Office of the Secretary

Meeting of the DOD Advisory Group on Electron Devices

AGENCY: Department of Defense, Advisory Group on Electron Devices.

ACTION: Notice.

SUMMARY: Working Group B (Microelectronics) of the DoD Advisory Group on Electron Devices (AGED) announces a closed session meeting.

DATES: The meeting will be held at 0900, Thursday, July 22, 1999.

ADDRESSES: The meeting will be held Palisades Institute for Research Services, 1745 Jefferson Davis Highway, Suite 500, Arlington, VA 22202.

FOR FURTHER INFORMATION CONTACT: Timothy Doyle, AGED Secretariat, 1745 Jefferson Davis Highway, Crystal Square Four, Suite 500, Arlington, Virginia 22202.

SUPPLEMENTARY INFORMATION: The mission of the Advisory Group is to provide advice to the Under Secretary of

Defense for Acquisition and Technology, to the Director Defense Research and Engineering (DDR&E), and through the DDR&E, to the Director Defense Advanced Research Projects Agency and the Military Departments in planning and managing an effective research and development program in the field of electron devices.

The Working Group B meeting will be limited to review of research and development programs which the military proposes to initiate with industry, universities or in their laboratories. The microelectronics area includes such programs on semiconductor materials, integrated circuits, charge coupled devices and memories. The review will include classified program details throughout.

In accordance with Section 10(d) of Public Law 92–463, as amended, (5 U.S.C. App. section 10(d) (1994)), it has been determined that this Advisory Group meeting concerns matters listed in (5 U.S.C. § 552b(c)(1) 1994)), and that accordingly, this meeting will be closed to the public.

Dated: June 8, 1999.

L.M. Bynum,

Alternate OSD Federal Register Liaison Officer, Department of Defense.

[FR Doc. 99–14942 Filed 6–11–99; 8:45 am]

BILLING CODE 5001–10–M

DEPARTMENT OF DEFENSE

Office of the Secretary

Meeting of the DOD Advisory Group on Electron Devices

AGENCY: Department of Defense, Advisory Group on Electron Devices.

ACTION: Notice.

SUMMARY: The DoD Advisory Group on Electron Devices (AGED) announces a closed session meeting.

DATES: The meeting will be held at 0900, Wednesday, July 21, 1999.

ADDRESSES: The meeting will be held at Palisades Institute for Research Services, 1745 Jefferson Davis Highway, Suite 500, Arlington, VA 22202.

FOR FURTHER INFORMATION CONTACT: Mr. Eliot Cohen, AGED Secretariat, 1745 Jefferson Davis Highway, Crystal Square Four, Suite 500, Arlington, Virginia 22202.

SUPPLEMENTARY INFORMATION: The mission of the Advisory Group is to provide advice to the Under Secretary of Defense for Acquisition and Technology, to the Director of Defense Research and Engineering (DDR&E), and through DDR&E to the Director, Defense Advanced Research Projects Agency and the Military Departments in planning and managing an effective and economical research and development program in the area of electron devices.

The AGED meeting will be limited to review of research and development programs which the Military Departments propose to initiate with industry, universities or in their laboratories. The agenda for this meeting will include programs on Radiation Hardened Devices, Microwave Tubes, Displays and Lasers. The review will include details of classified defense programs throughout.

In accordance with Section 10(d) of Public Law 92–463, as amended, (5 U.S.C. App. Section 10(d) (1994)), it has been determined that this Advisory Group meeting concerns matters listed in 5 U.S.C. 552b(c)(1) (1994), and that accordingly, this meeting will be closed to the public.

Dated: June 8, 1999.

L.M. Bynum,

Alternate OSD Federal Register Liaison Officer, Department of Defense.

[FR Doc. 99–14943 Filed 6–11–99; 8:45 am]

BILLING CODE 5001–10–M

DEPARTMENT OF DEFENSE

Office of the Secretary

Cancellation of DoD Advisory Group on Electron Devices

AGENCY: Department of Defense.

ACTION: Notice.

SUMMARY: This notice announces the cancellation of the DoD Advisory Group on Electron Devices meeting originally scheduled for June 15, 1999.

FOR FURTHER INFORMATION CONTACT: Elise Rabin, AGED Secretariat, 1745 Jefferson Davis Highway, Crystal Square Four, Suite 500, Arlington, Virginia 22202.

SUPPLEMENTARY INFORMATION: On April 26, 1999 (64 FR 20279), the Department of Defense published the notice announcing the meeting of the DoD Advisory Group on Electron Device.

Dated: June 8, 1999.

L.M. Bynum,

Alternate OSD Federal Register Liaison Officer, Department of Defense.

[FR Doc. 99–14944 Filed 6–11–99; 8:45 am]

BILLING CODE 5000–04–M

DEPARTMENT OF DEFENSE

Office of the Secretary

Joint Service Committee on Military Justice: Public Meeting

AGENCY: Joint Service Committee on Military Justice (JSC), DoD.

ACTION: Notice of public meeting.

SUMMARY: This notice sets forth the schedule and proposed agenda for a public meeting of the JSC. This notice also describes the functions of the JSC.

DATES AND TIMES: Wednesday, July 21, 1999, at 2:00 p.m.

ADDRESSES: Room 808, 1501 Wilson Blvd., Arlington,VA 22209–22403.

FUNCTION: The JSC was established by the Judge Advocates General in 1972. The JSC currently operates under Department of Defense Directive 5500.17, May 8, 1996. The function of the JSC is to improve military justice through preparation and evaluation of proposed amendments and changes to the Uniform Code of Military Justice and the Manual for Courts-Martial.

AGENDA: The JSC will receive public comment concerning its 1999 draft review of the proposed amendments to the Manual for Courts-Martial as published on May 21, 1999. This notice is provided in accordance with DoD Directive 5500.17, ''Role and Responsibilities of the Joint Service Committee (JSC) on Military Justice,'' May 8, 1996. This notice is intended only to improve the internal management of the Federal Government. It is not intended to create any right or benefit, substantive or procedural, enforceable at law by any party against the United States, its agencies, its officers, or any person.

FOR FURTHER INFORMATION CONTACT: Lt Col Thomas C. Jaster, U.S. Air Force, Air Force Legal Services Agency, 112 Luke Avenue, Room 343, Bolling Air Force Base, Washington, DC 20332–8000, (202) 767–1539; FAX (202) 404–8755.

Dated: June 7, 1999.

L.M. Bynum,

Alternate OSD Federal Register Liaison Officer, Department of Defense.

[FR Doc. 99–14951 Filed 6–11–99; 8:45 am]

BILLING CODE 5001–10–P

DEPARTMENT OF DEFENSE

Office of the Secretary of Defense

Department of Defense Wage Committee; Closed Meetings

Pursuant to the provisions of section 10 of Public Law 92–463, the Federal

Advisory Committee Act, notice is hereby given that closed meetings of the Department of Defense Wage Committee will be held on July 6, 1999, July 13, 1999, July 20, 1999, and July 27, 1999 at 10:00 a.m. in Room A105, the Nash Building, 1400 Key Boulevard, Rosslyn, Virginia.

Under the provisions of section 10(d) of Public Law 92–463, the Department of Defense has determined that the meetings meet the criteria to close meetings to the public because the matters to be considered are related to internal rules and practices of the Department of Defense and the detailed wage data to be considered were obtained from officials of private establishments with a guarantee that the data will be held in confidence.

However, members of the public who may wish to do so are invited to submit material in writing to the chairman concerning matters believed to be deserving of the Committee's attention.

Additional information concerning the meetings may be obtained by writing to the Chairman, Department of Defense Wage Committee, 4000 Defense Pentagon, Washington, DC 20301–4000.

June 7, 1999.

L.M. Bynum,

Alternate OSD Federal Register Liaison Officer, Department of Defense.

[FR Doc. 99–14938 Filed 6–11–99; 8:45 am]

BILLING CODE 5001–10–M

DEPARTMENT OF DEFENSE

Office of the Secretary

Revised Non-Foreign Overseas Per Diem Rates.

AGENCY: DoD, Per Diem, Travel and Transportation Allowance Committee.

ACTION: Notice of revised non-foreign overseas per diem rates.

SUMMARY: The Per Diem, Travel and Transportation Allowance Committee is publishing Civilian Personnel Per Diem Bulletin Number 208. This bulletin lists revisions in the per diem rates prescribed for U.S. Government employees for official travel in Alaska, Hawaii, Puerto Rico, the Northern Mariana Islands and Possessions of the United States. AEA changes announced in Bulletin Number 194 remain in effect. Bulletin Number 208 is being published in the **Federal Register** to assure that travelers are paid per diem at the most current rates.

EFFECTIVE DATE: June 1, 1999.

SUPPLEMENTARY INFORMATION: This document gives notice of revisions in per diem rates prescribed by the Per Diem Travel and Transportation Allowance Committee for non-foreign areas outside the continental United States. It supersedes Civilian Personnel Per Diem Bulletin Number 207. Distribution of Civilian Personnel Per Diem Bulletins by mail was discontinued. Per Diem Bulletins published periodically in the **Federal Register** now constitute the only notification of revisions in per diem rates to agencies and establishments outside the Department of Defense. For more information or questions about per diem rates; please contact your local travel office. The text of the Bulletin follows:

Dated: June 7, 1999.

L.M. Bynum,

Alternate OSD Federal Register Liaison Officer, Department of Defense.

BILLING CODE 5001–10–M

Maximum Per Diem Rates for official travel in Alaska, Hawaii, the Commonwealths of Puerto Rico and the Northern Mariana Islands and Possessions of the United States by Federal Government civilian employees.

LOCALITY	MAXIMUM LODGING AMOUNT (A) +	M&IE RATE (B) =	MAXIMUM PER DIEM RATE (C)	EFFECTIVE DATE
ALASKA				
ANCHORAGE [INCL NAV RES]				
05/01 - 09/30	161	63	224	03/01/1999
10/01 - 04/30	89	56	145	03/01/1999
BARROW	115	73	188	03/01/1999
BETHEL	105	60	165	03/01/1999
CLEAR AB	80	57	137	03/01/1999
COLD BAY	110	68	178	03/01/1999
CORDOVA	85	62	147	03/01/1998
CRAIG				
05/01 - 08/31	95	66	161	10/01/1998
09/01 - 04/30	79	64	143	10/01/1998
DEADHORSE	80	67	147	03/01/1999
DENALI NATIONAL PARK				
06/01 - 08/31	115	52	167	03/01/1998
09/01 - 05/31	90	50	140	03/01/1998
DILLINGHAM	95	59	154	10/01/1998
DUTCH HARBOR-UNALASKA	110	71	181	03/01/1999
EARECKSON AIR STATION	80	57	137	03/01/1999
EIELSON AFB				
05/15 - 09/15	118	58	176	03/01/1999
09/16 - 05/14	81	54	135	03/01/1999
ELMENDORF AFB				
05/01 - 09/30	161	63	224	03/01/1999
10/01 - 04/30	89	56	145	03/01/1999
FAIRBANKS				
05/15 - 09/15	118	58	176	03/01/1999
09/16 - 05/14	81	54	135	03/01/1999
FT. RICHARDSON				
05/01 - 09/30	161	63	224	03/01/1999
10/01 - 04/30	89	56	145	03/01/1999
FT. WAINWRIGHT				
05/15 - 09/15	118	58	176	03/01/1999
09/16 - 05/14	81	54	135	03/01/1999
GLENNALLEN	90	52	142	10/01/1998
HEALY				
06/01 - 08/31	115	52	167	03/01/1998
09/01 - 05/31	90	50	140	03/01/1998
HOMER				
05/15 - 09/15	115	58	173	03/01/1999
09/16 - 05/14	98	57	155	03/01/1999
JUNEAU	105	68	173	03/01/1999
KAKTOVIK	175	74	249	03/01/1999

Maximum Per Diem Rates for official travel in Alaska, Hawaii, the Commonwealths of Puerto Rico and the Northern Mariana Islands and Possessions of the United States by Federal Government civilian employees.

LOCALITY	MAXIMUM LODGING AMOUNT (A) +	M&IE RATE (B) =	MAXIMUM PER DIEM RATE (C)	EFFECTIVE DATE
KAVIK CAMP	125	69	194	03/01/1999
KENAI-SOLDOTNA				
05/01 - 09/30	114	63	177	03/01/1999
10/01 - 04/30	76	59	135	03/01/1999
KENNICOTT	149	68	217	10/01/1998
KETCHIKAN				
05/01 - 09/30	110	74	184	03/01/1999
10/01 - 04/30	88	73	161	03/01/1999
KING SALMON	101	70	171	03/01/1999
KLAWOCK				
05/01 - 08/31	95	66	161	10/01/1998
09/01 - 04/30	79	64	143	10/01/1998
KODIAK	99	67	166	03/01/1999
KOTZEBUE				
05/01 - 08/31	137	75	212	03/01/1999
09/01 - 04/30	73	61	134	03/01/1999
KULIS AGS				
05/01 - 09/30	161	63	224	03/01/1999
10/01 - 04/30	89	56	145	03/01/1999
MCCARTHY	149	68	217	10/01/1998
METLAKATLA				
05/30 - 10/01	85	52	137	03/01/1999
10/02 - 05/29	78	51	129	03/01/1999
MURPHY DOME				
05/15 - 09/15	118	58	176	03/01/1999
09/16 - 05/14	81	54	135	03/01/1999
NOME				
03/01 - 03/31	117	58	175	03/01/1999
04/01 - 02/29	92	56	148	03/01/1999
NUIQSUT	120	69	189	03/01/1999
PETERSBURG	87	57	144	03/01/1999
POINT HOPE	130	70	200	03/01/1999
POINT LAY	105	67	172	03/01/1999
PRUDHOE BAY	80	67	147	03/01/1999
SEWARD				
05/01 - 09/30	122	65	187	03/01/1999
10/01 - 04/30	86	61	147	03/01/1999
SITKA-MT. EDGECOMBE				
09/05 - 03/31	83	59	142	10/01/1998
04/01 - 09/04	101	60	161	03/01/1998
SKAGWAY				
05/01 - 09/30	110	74	184	03/01/1999
10/01 - 04/30	88	73	161	03/01/1999

Maximum Per Diem Rates for official travel in Alaska, Hawaii, the Commonwealths of Puerto Rico and the Northern Mariana Islands and Possessions of the United States by Federal Government civilian employees.

LOCALITY	MAXIMUM LODGING AMOUNT (A) +	M&IE RATE (B) =	MAXIMUM PER DIEM RATE (C)	EFFECTIVE DATE
SPRUCE CAPE	99	67	166	03/01/1999
TANANA				
03/01 - 03/31	117	58	175	03/01/1999
04/01 - 02/29	92	56	148	03/01/1999
UMIAT	107	33	140	03/01/1999
VALDEZ				
05/15 - 10/01	110	63	173	03/01/1999
10/02 - 05/14	84	60	144	03/01/1999
WAINWRIGHT	127	82	209	03/01/1999
WRANGELL				
05/01 - 09/30	110	74	184	03/01/1999
10/01 - 04/30	88	73	161	03/01/1999
YAKUTAT	110	68	178	03/01/1999
[OTHER]	80	57	137	03/01/1999
AMERICAN SAMOA				
AMERICAN SAMOA	73	53	126	03/01/1997
GUAM				
GUAM (INCL ALL MIL INSTAL)	150	79	229	10/01/1998
HAWAII				
CAMP H M SMITH	110	61	171	10/01/1998
EASTPAC NAVAL COMP TELE AREA	110	61	171	10/01/1998
FT. DERUSSEY	110	61	171	10/01/1998
FT. SHAFTER	110	61	171	10/01/1998
HICKAM AFB	110	61	171	10/01/1998
HONOLULU NAVAL & MC RES CTR	110	61	171	10/01/1998
ISLE OF HAWAII: HILO	80	52	132	06/01/1998
ISLE OF HAWAII: OTHER	100	54	154	10/01/1998
ISLE OF KAUAI				
12/01 - 04/30	145	64	209	06/01/1999
05/01 - 11/30	115	62	177	06/01/1998
ISLE OF KURE	65	41	106	05/01/1999
ISLE OF MAUI	112	64	176	10/01/1998
ISLE OF OAHU	110	61	171	10/01/1998
KANEOHE BAY MC BASE	110	61	171	10/01/1998
KEKAHA PACIFIC MISSILE RANGE FAC				
12/01 - 04/30	145	64	209	06/01/1999
05/01 - 11/30	115	62	177	06/01/1998
KILAUEA MILITARY CAMP	80	52	132	06/01/1998
LUALUALEI NAVAL MAGAZINE	110	61	171	10/01/1998
NAS BARBERS POINT	110	61	171	10/01/1998
PEARL HARBOR [INCL ALL MILITARY]	110	61	171	10/01/1998
SCHOFIELD BARRACKS	110	61	171	10/01/1998
WHEELER ARMY AIRFIELD	110	61	171	10/01/1998

Maximum Per Diem Rates for official travel in Alaska, Hawaii, the Commonwealths of Puerto Rico and the Northern Mariana Islands and Possessions of the United States by Federal Government civilian employees.

LOCALITY	MAXIMUM LODGING AMOUNT (A) +	M&IE RATE (B) =	MAXIMUM PER DIEM RATE (C)	EFFECTIVE DATE
[OTHER]	79	62	141	06/01/1993
JOHNSTON ATOLL				
JOHNSTON ATOLL	13	9	22	10/01/1998
MIDWAY ISLANDS				
MIDWAY ISLANDS [INCL ALL MILITAR	65	41	106	05/01/1999
NORTHERN MARIANA ISLANDS				
ROTA	88	69	157	06/01/1999
SAIPAN	154	88	242	06/01/1999
[OTHER]	61	62	123	06/01/1999
PUERTO RICO				
BAYAMON				
04/16 - 11/14	150	70	220	04/01/1999
11/15 - 04/15	167	72	239	04/01/1999
CAROLINA				
04/16 - 11/14	150	70	220	04/01/1999
11/15 - 04/15	167	72	239	04/01/1999
FAJARDO [INCL CEIBA & LUQUILLO]	82	60	142	03/01/1998
FT. BUCHANAN [INCL GSA SVC CTR,				
04/16 - 11/14	150	70	220	04/01/1999
11/15 - 04/15	167	72	239	04/01/1999
HUMACAO	82	60	142	03/01/1998
LUIS MUNOZ MARIN IAP AGS				
04/16 - 11/14	150	70	220	04/01/1999
11/15 - 04/15	167	72	239	04/01/1999
MAYAGUEZ	94	60	154	06/01/1998
PONCE	101	67	168	09/01/1998
ROOSEVELT RDS & NAV STA	82	60	142	03/01/1998
SABANA SECA [INCL ALL MILITARY]				
04/16 - 11/14	150	70	220	04/01/1999
11/15 - 04/15	167	72	239	04/01/1999
SAN JUAN & NAV RES STA				
04/16 - 11/14	150	70	220	04/01/1999
11/15 - 04/15	167	72	239	04/01/1999
[OTHER]	66	57	123	09/01/1998
VIRGIN ISLANDS (U.S.)				
ST. CROIX				
04/15 - 12/14	107	75	182	08/01/1998
12/15 - 04/14	131	78	209	08/01/1998
ST. JOHN				
04/15 - 12/14	286	89	375	10/01/1998
12/15 - 04/14	413	102	515	08/01/1998

Maximum Per Diem Rates for official travel in Alaska, Hawaii, the Commonwealths of Puerto Rico and the Northern Mariana Islands and Possessions of the United States by Federal Government civilian employees.

LOCALITY	MAXIMUM LODGING AMOUNT (A) +	M&IE RATE (B) =	MAXIMUM PER DIEM RATE (C)	EFFECTIVE DATE
ST. THOMAS				
04/15 - 12/14	171	75	246	08/01/1998
12/15 - 04/14	285	87	372	08/01/1998
WAKE ISLAND				
WAKE ISLAND	60	32	92	09/01/1998

[FR Doc. 99–14948 Filed 6–11–99; 8:45 am]

BILLING CODE 5001–10–C

DEPARTMENT OF DEFENSE

Department of the Army

Proposed Collection; Comment Request

AGENCY: Deputy Chief of Staff for Personnel (DAPE–ZXI–RM), DoD.

ACTION: Notice.

In compliance with Section 3506(c)(2)(A) of the Paperwork Reduction Act of 1995, the Department of the Army announces a proposed public information collection and seeks public comment on the provisions thereof. Comments are invited on: (a) Whether the proposed collection of information is necessary for the proper performance of the functions of the agency, including whether the information shall have practical utility; (b) the accuracy of the agency's estimate of the burden of the proposed information collection; (c) ways to enhance the qualify, utility, and clarity of the information to be collected; and (d) ways to minimize the burden of the information collection on respondents, including through the use of automated collection techniques or other forms of information technology.

DATES: Consideration will be given to all comments received by August 13, 1999.

ADDRESSES: Written comments and recommendations on the proposed information collection should be sent to the United States Army Cadet Command, Accessions Management and Scholarship Division, Building 56 Patch Road, ATTN: ATCC–PS, (Mary Lou Stoddard) Fort Monroe, Virginia 23651–5238. Consideration will be given to all comments received within 60 days of the date of publication of this notice.

FOR FURTHER INFORMATION CONTACT: To request more information on this proposed information collection or to obtain a copy of the proposal and associated collection instruments, please write to the above address, or call Department of the Army Reports clearance officer at (703) 614–0454.

Title, Associated Form, and OMB Number: Application for the U.S. Army ROTC 2-Year and 3-Year Scholarship, ROTC Cadet Command Form 166–R; OMB Number 0702–0083.

Needs and Uses: The application is one of the tools used in the selection process for the 2-year and 3-year ROTC scholarships. The Army ROTC Program produces approximately 80 percent of the newly commissioned officers for the U.S. Army. The ROTC scholarship is an incentive to attract men and women to pursue educational degrees in the academic disciplines required by the Army

Affected Public: Individuals or households.

Annual Burden Hours: 1,935.

Number of Respondents: 3,870.

Responses Per Respondent: 1.

Average Burden Per Response: 30 minutes.

Frequency: Annually.

SUPPLEMENTARY INFORMATION: The applications are available to universities and colleges that host Army ROTC. After the applications are completed, they are submitted to HQ Cadet Command for review, screening, and selection of scholarship recipients. If the academic, educational and extracurricular background were not collected, a more burdensome academic examination would be required to screen to voluminous applications for quality recipients.

Gregory D. Showalter,

Army Federal Register, Liaison Officer.

[FR Doc. 99–14997 Filed 6–11–99; 8:45 am]

BILLING CODE 3710–08–M

DEPARTMENT OF DEFENSE

Department of the Army

Proposed Collection; Comment Request

AGENCY: Deputy Chief of Staff for Personnel (DAPE–ZXI–RM), DoD.

ACTION: Notice.

In compliance with Section 3506(c)(2)(A) of the Paperwork Reduction Act of 1995, the Department of the Army announces a proposed public information collection and seeks public comment on the provisions thereof. Comments are invited on: (a) Whether the proposed collection of information is necessary for the proper performance of the functions of the agency, including whether the information shall have practical utility; (b) the accuracy of the agency's estimate of the burden of the proposed information collection; (c) ways to enhance the quality, utility, and clarity of the information to be collected; and (d) ways to minimize the burden of the information collection on respondents, including through the use of automated collection techniques or other forms of information technology.

DATES: Consideration will be given to all comments received by August 13, 1999.

ADDRESSES: Written comments and recommendations on the proposed information collection should be sent to the United States Army Cadet Command, Accessions Management and Scholarship Division, Building 56 Patch Road, ATTN: ATCC–PS, (Mary Lou Stoddard) Fort Monroe, Virginia 23651–5238. Consideration will be given to all comments received within 60 days of the date of publication of this notice.

FOR FURTHER INFORMATION CONTACT: To request more information on this proposed information collection or to obtain a copy of the proposal and associated collection instruments, please write to the above address, or call Department of the Army Reports clearance officer at (703) 614–0454

Title, Associated Form, and OMB Number: Army ROTC 4-Year Scholarship Application; ROTC Cadet Command Form 114; OMB Number 0702–0073.

Needs and Uses: The ROTC scholarship provides the Army with highly qualified men and women who desire to pursue a commission in the U.S. Army. The application and information provides the basis for the scholarship award. An Army ROTC scholarship is the major incentive for attracting and retaining outstanding students into Army ROTC.

Affected Public: Individuals or Households.

Annual Burden Hours: 5,625.

Number of Respondents: 7,500.

Responses Per Respondent: 1.

Average Burden Per Response: 45 minutes.

Frequency: Annually.

SUPPLEMENTARY INFORMATION: The Army ROTC Programs produces over 80 percent of the newly commissioned officers for the U.S. Army. The education, physical and academic potential of a ROTC are critical factors in his or her overall evaluation. There approximately 7,500 applicants who apply annually for the 4-Year ROTC scholarship program. Approximately 750 applicants are awarded a 4-Year scholarship annually.

Gregory D. Showalter,

Army Federal Register Liaison Officer.

[FR Doc. 99–14998 Filed 6–11–99; 8:45 am]

BILLING CODE 3710–08–M

DEPARTMENT OF DEFENSE

Department of the Navy

Meeting of the Board of Visitors to the U.S. Naval Academy

AGENCY: Department of the Navy, DOD.

ACTION: Notice.

SUMMARY: The U.S. Naval Academy Board of Visitors will meet to make such

inquiry as the Board shall deem necessary into the state of morale and discipline, the curriculum, instruction, physical equipment, fiscal affairs, and academic methods of the Naval Academy. During this meeting inquiries will relate to the internal personnel rules and practices of the Academy, may involve on-going criminal investigations, and include discussions of personal information the disclosure of which would constitute a clearly unwarranted invasion of personal privacy. The executive session of this meeting will be closed to the public.

DATES: The meeting will be held on Monday, June 14, 1999 from 8:30 a.m. to 10:00 p.m. The closed Executive Session will be from 09:30 a.m. to 10:00 p.m.

ADDRESSES: The meeting will be held in the Bo Coppedge Room of Alumni Hall at the U.S. Naval Academy, Annapolis MD.

FOR FURTHER INFORMATION CONTACT: Lieutenant Commander Gerral K. David, Executive Secretary to the Board of Visitors, Office of the Superintendent, U.S. Naval Academy, Annapolis, MD 21402–5000, (410) 293–1503.

SUPPLEMENTARY INFORMATION: This notice of meeting is provided per the Federal Advisory Committee Act (5 U.S.C. App. 2). The executive session of the meeting will consist of discussions of information which pertain to the conduct of various midshipmen at the Naval Academy and internal Board of Visitors matters. Discussion of such information cannot be adequately segregated from other topics, which precludes opening the executive session of this meeting to the public. In accordance with 5 U.S.C. App. 2, section 10(d), the Secretary of the Navy has determined in writing that the special committee meeting shall be partially closed to the public because they will be concerned with matters as outlined in section 552(b)(2), (5), (6), and (7) of title 5, U.S.C. Due to unavoidable delay in administrative processing, the normal 15 days notice could not be provided.

Dated: May 26, 1999.

Ralph W. Corey,

Commander, Judge Advocate General's Corps, U.S. Navy, Alternate Federal Register Liaison Officer.

[FR Doc. 99–15136 Filed 6–11–99; 8:45 am]

BILLING CODE 3810–FF–P

DEPARTMENT OF ENERGY

Federal Energy Regulatory Commission

[Docket Nos. CP99–541–000, CP99–542–000, and CP99–543–000]

Cotton Valley Compression, L.L.C.; Application

June 8, 1999.

Take notice that on June 1, 1999, Cotton Valley Compression, L.L.C. (CVC), 301 S.E. Adams Boulevard, Bartlesville, Oklahoma 74003 filed in Docket No. CP99–541–000, an application pursuant to Section 7(c) of the Natural Gas Act. CVC states its application is being filed at the direction of the Commission,[1] where the Commission found that CVC was engaged in interstate transportation of natural gas and directed CVC to file ''an application for certificate authorization, under Section 7(c) of the NGA, and Part 157 of the Commission's regulations, to continue utilizing the facilities for the transportation of gas in interstate commerce, or to abandon those facilities.''

In Docket No. CP99–542–000, CVC seeks a blanket certificate pursuant to Subpart G of Part 284 of the Commission's Regulations in order to provide open access transportation of natural gas for others. Finally, in Docket No. CP99–543–000, CVC requests a blanket certificate pursuant to Subpart F of Part 157 of the Commission's Regulations in order to perform certain routine activities and operations.

These requests are more fully set forth in the June 1st application which is on file with the Commission and open to public inspection. This filing may be viewed on the web at http:///www.ferc.fed.us/online/rims.htm (call 202–208–2222 for assistance).

CVC states that the facilities to be certificated, all of which already exist in Washington County, Oklahoma, consist of approximately 700 feet of dual 4″ diameter natural gas pipe, running between two different interstate pipelines (low pressure Hogshooter and high pressure Quapaw pipelines) of Williams Gas Pipelines Central, Inc. (Williams), 1,200 horsepower of leased compression at the downstream delivery point into Williams, and appurtenant facilities.

CVC requests authority to provide firm and interruptible transportation services on a non-discriminatory, open-access basis, consistent with the Commission's Part 284 policy. CVC's FT Rate Schedule will consist of a monthly reservation charge of $1.99 per Dth; its IT Rate Schedule rate is 6.5 cents per Dth; and the fuel retention is at 2%.

CVC states that based on upstream gas production increases projected by the five CVC producer-owners, CVC also requests that the Commission certificate, on a blanket basis, the net increase of 1,800 horsepower of compression, to add 18,000 Dth/d of delivery capacity into Williams' Quapaw pipeline, under specified conditions.

CVC has included a pro forma FERC Gas Tariff, proposing to rely in large part on the Williams' FERC Gas Tariff, with changes only to reflect CVC's circumstances. Within six months of certification, CVC proposes to operate a website on the Internet, which will contain three basis elements: (1) Printed text of the basic elements of a tariff specified in Part 154, Subpart B; (2) electronic ''link'' directly to FERC's FASTR website for Williams' General Terms and Conditions, which are incorporated by CVC; and (3) e-mail link directly to CVC for purposes of asking questions or relaying operational instructions.

CVC seeks waivers of various reporting and regulatory requirements, due to its small size and unique circumstances.

Any person desiring to be heard or to make any protest with reference to said application should on or before June 29, 1999, file with the Federal Energy Regulatory Commission, 888 First Street, NE, Washington, D.C. 20426, a motion to intervene or a protest in accordance with the requirements of the Commission's Rules of Practice and Procedure (18 CFR 385.214 and 385.211) and the Regulations under the Natural Gas Act (18 CFR 157.10). All protests filed with the Commission will be considered by it in determining the appropriate action to be taken but will not serve to make the protestants parties to the proceeding. The Commission's rules require that protestors provide copies of their protests to the party or parties directly involved. Any person wishing to become a party in any proceeding herein must file a motion to intervene in accordance with the Commission's rules.

A person obtaining intervenor status will be placed on the service list maintained by the Secretary of the Commission and will receive copies of all documents filed by the applicant and by every one of the intervenors. An intervenor can file for rehearing of any Commission order and can petition for court review of any such order. However, an intervenor must submit copies of comments or any other filing

[1] Williams Natural Gas Company, Docket No. CP97–706–000, 86 FERC ¶ 61,213 (1999).

it makes with the Commission to every other intervenor in the proceeding, as well as 14 copies with the Commission.

A person does not have to intervene, however, in order to have comments considered. A person, instead, may submit two copies of comments to the Secretary of the Commission. Commenters will be placed on the Commission's environmental mailing list, will receive copies of environmental documents and will be able to participate in meetings associated with the Commission's environmental review process. Commenters will not be required to serve copies of filed documents on all other parties. However, commenters will not receive copies of all documents filed by other parties or issued by the Commission and will not have the right to seek rehearing or appeal the Commission's final order to a federal court.

The Commission will consider all comments and concerns equally, whether filed by commenters or those requesting intervenor status.

Take further notice that, pursuant to the authority contained in and subject to the jurisdiction conferred upon the Commission by Sections 7 and 15 of the Natural Gas Act and the Commission's Rules and Practice and Procedure, a hearing will be held without further notice before the Commission or its designee on this application if no motion to intervene is filed within the time required herein, if the Commission on its own review of the matter finds that granting the certificates is required by the public convenience and necessity. If a motion for leave to intervene is timely filed, or if the Commission on its own motion believes that formal hearing is required, further notice of such hearing will be duly given.

Under the procedure herein provided for, unless otherwise advised, it will be unnecessary for CVC to appear to be represented at the hearing.

Linwood A. Watson, Jr.,

Acting Secretary.

[FR Doc. 99–14957 Filed 6–11–99; 8:45 am]

BILLING CODE 6717–01–M

DEPARTMENT OF ENERGY

Federal Energy Regulatory Commission

[Docket No. PR99–15–000]

Louisiana State Gas, LLC; Petition for Rate Approval

June 8, 1999.

Take notice that on May 28, 1999, Louisiana State Gas, LLC (Louisiana State), filed a petition for rate approval to reduce the existing maximum rate for interruptible transportation on its South Louisiana Pipeline System from $0.0642 per MMBtu to $0.0597 per MMBtu. The rate pertains to transportation performed under Section 311 of the Natural Gas Policy Act of 1978. The filing was made to comply with the Commission's October 20, 1997, order in Docket No. PR96–9–000.

Louisiana State is a subsidiary of LEDCO, LLC. Louisiana State states that its South Louisiana Pipeline System consists of approximately 34 miles of mainly 12-inch pipeline extending westward from a point near Buras, Louisiana, to the Barateria Waterway near Grand Isle, Louisiana, to the Barateria Waterway near Grand Isle, Louisiana. Louisiana adds that all piping and related facilities in the system are located in Bastion Bay, which is a coastal salt marsh accessible only by plane or boat. Louisiana State's only Section 311 shipper is LEDCO.

Pursuant to Section 284.123(b)(2)(ii), if the Commission does not act within 150 days of the filing date, the proposed rate for transportation service will be deemed fair and equitable. The Commission may, prior to the expiration of the 150-day period, extend the time for action or institute a proceeding to afford parties an opportunity for written comments and for the oral presentations of views, data, and arguments. Any person desiring to participate in this rate proceeding must file a motion to intervene or protest with the Federal Energy Regulatory Commission, 888 First Street, N.E., Washington, D.C. 20426, in accordance with Rules 211 and 214 of the Commission's Rules of Practice and Procedure (18 CFR 385.211 and 385.214). All motions must be filed with the Secretary of the Commission on or before June 28, 1999. The petition for rate approval is on file with the Commission and is available for public inspection. This filing may be viewed on the web at http://www.ferc.fed.us/online/rims.htm (call 202–208–2222 for assistance).

Linwood A. Watson, Jr.,

Acting Secretary.

[FR Doc. 99–14959 Filed 6–11–99; 8:45 am]

BILLING CODE 6717–01–M

DEPARTMENT OF ENERGY

Federal Energy Regulatory Commission

[Docket No. PR99–2–000]

Transok, LLC; Informal Settlement Conference

June 8, 1999.

Take notice that an informal settlement conference in the above-captioned proceeding will be held on Thursday, June 17, 1999, at 10:00 A.M. in a room to be designated at the offices of the Federal Energy Regulatory Commission, 888 First Street, N.E., Washington, D.C.

Attendance will be limited to the parties and staff. For additional information, please contact Louis Lieb at (202) 208–0012.

Linwood A. Watson, Jr.,

Acting Secretary.

[FR Doc. 99–14958 Filed 6–11–99; 8:45 am]

BILLING CODE 6717–01–M

DEPARTMENT OF ENERGY

Federal Energy Regulatory Commission

[Docket No. RP99–330–000]

United Gas Services v. K N Interstate Gas Transmission Co. and K N Energy, Inc; Complaint

June 8, 1999.

Take notice that on June 4, 1999, pursuant to Rule 206 of the Commission's Rules of Practice and Procedure, 18 CFR 385.206, Consumer Services Association, Inc. d/b/a United Gas Services (United) tendered for filing a complaint against K N Interstate Gas Transmission Co. (KNI) and K N Energy Inc. (KNE).

United States that on December 16, 1998, KNI declared a ''unauthorized overrun period.'' The period extended from December 18, 1998 through December 27, 1998. A second unauthorized overrun period was declared for January 2–5, 1999.

United asserts that at about the time NKI declared the December unauthorized overrun period, Mr. Will Meehl of KNE contacted United about an anticipated temperature-induced

increase in demand for ''Type I Customers'' under KNE's Supplier Choice Program in Nebraska. KNE requested United to increase to ''75% of peak load'' United's nominated volumes to delivery points on the KNI system connection to local distribution facilities of KNE. United indicates that it promptly complied with this request, and Mr. Meehl subsequently advised United that KNE was ''satisfied'' with United's response and with the level of United's nominations.

United asserts that in January 1999, in the ordinary billing cycle, United received from KNI an invoice for December 1998 transportation service. Subsequently, United asserts that it received an invoice in February 1999 KNI for $199,182.00 in unauthorized overrun penalties plus additional authorized overrun penalties and out-of-path penalty charges for allegedly overdelivering volumes during the designated unauthorized overrun periods in December 1998 and January 1999. United asserts these charges were unjust and unreasonable, since they were based on after-the-fact allocations made by the point operator, KNE, which is a KNI affiliate, and were pursuant to an allocation agreement that United had no notice of. United also assert that the doctrine of estoppel should bar these penalties in any event, since assurance and been given that United's nominations during the overrun period were satisfactory.

Any person desiring to be heard or to protest said complaint should file a motion to intervene or protest with the Federal Energy Regulatory Commission, 888 First Street, NE, Washington, DC 20426, in accordance with Rules 214 and 211 of the Commission's Rules of Practice and Procedure 18 CFR 385.214 and 385.211, All such motions or protests should be filed on or before June 24, 1999. Protests will be considered by the Commission to determining the appropriate action to be taken, but will not serve to make protestants parties to the proceeding. Any person wishing to become a party must file a motion to intervene. Copies of this filing are on file with the Commission and are available for public inspection. This filing may be viewed on the web at http://www.ferc.fed.us/online/rims.htm (call 202–208–2222 for assistance). Answers to this compliant shall be due on or before June 24, 1999.

Linwood A. Watson Jr.,

Acting Secretary.

[FR Doc. 99–14985 Filed 6–11–99; 8:45 am]

BILLING CODE 6717–01–M

DEPARTMENT OF ENERGY

Federal Energy Regulatory Commission

Declaration of Intention and Soliciting Comments, Motions To Intervene, and Protests

June 8, 1999.

Take notice that the following application has been filed with the Commission and is available for public inspection:

a. *Application Type:* Declaration of Intention.

b. *Docket No:* DI99–7–000.

c. *Date Filed:* May 13, 1999.

d. *Applicant:* Great Northern Adventure, L.L.C.

e. *Name of Project:* Ching Creek Project.

f. *Location:* On Ching Creek, in Clark County, ID (T. 13 N., R. 39 E., sec. 3, Boise Meridian). The project does not utilize federal or tribal lands.

g. *Filed pursuant to:* Federal Power Act, 16 U.S.C. 791(a)–825(r).

h. *Applicant Contact:* Mr. Gregory Peck, Great Northern Adventure L.L.C., 2633 E. 105 N., Idaho Falls, ID 83401 (208) 523–5306.

i. *FERC Contact:* Any questions on this notice should be addressed to Etta Foster at (202) 219–2679, or e-mail address: etta.foster@ferc.fed.us.

j. *Deadline for filing comments and or motions:* July 15, 1999.

All documents (original and eight copies) should be filed with: David P. Boergers, Secretary, Federal Energy Regulatory Commission, 888 First Street, N.E., Washington, D.C. 20426.

Please include the docket number DI99–7–000) on any comments or motions filed.

k. *Description of Project:* The proposed project will consist of a 660-foot-long, 12-inch diameter penstock drawing water from the creek; a powerhouse containing a 10-kW generator; and appurtenant facilities. The power will be used to provide power for ranch operations. The nearest power distribution line is 7.5 miles.

When a Declaration of Intention is filed with the Federal Energy Regulatory Commission, the Federal Power Act requires the Commission to investigate and determine if the interests of interstate or foreign commerce would be affected by the project. The Commission also determines whether or not the project: (1) Would be located on a navigable waterway; (2) would occupy or affect public lands or reservations of the United States; (3) would utilize surplus water or water power from a government dam; or (4) if applicable, has involved or would involve any construction subsequent to 1935 that may have increased or would increase the project's head or generating capacity, or have otherwise significantly modified the project's pre-1935 design or operation.

l. *Locations of the Application:* A copy of the application is available for inspection and reproduction at the Commission's Public Reference Room, located at 888 First Street, NE, Room 2A, Washington, D.C. 20426, or by calling (202) 208–1371. This filing may be viewed on http://www.ferc.fed.us/online/rims.htm (call (202) 208–2222 for assistance). A copy is also available for inspection and reproduction at the address in item h above.

m. Individuals desiring to be included on the Commission's mailing list should so indicate by writing to the Secretary of the Commission.

Comments, Protests, or Motions to Intervene—Anyone may submit comments, or protest, or a motion to intervene in accordance with the requirements of Rules of Practice and Procedure, 18 CFR 385.210, .211, .214. In determining the appropriate action to take, the Commission will consider all protests or other comments filed, but only those who file a motion to intervene in accordance with the Commission's Rules may become a party to the proceeding. Any comments, protests, or motions to intervene must be received on or before the specified comment date for the particular application.

Filing and Service for Responsive Documents—Any filings must bear in all capital letters the title ''COMMENTS'', ''RECOMMENDATIONS FOR TERMS AND CONDITIONS'', ''PROTEST'', or ''MOTION TO INTERVENE'', as applicable, and the Project Number of the particular application to which the filing refers. Any of the above-named documents must be filed by providing the original and the number of copies provided by the Commission's regulations to: The Secretary, Federal Energy Regulatory Commission, 888 First Street, N.E., Washington, D.C. 20426. A copy of any motion to intervene must also be served upon each representative of the Applicant specified in the particular application.

Agency Comments—Federal, state, and local agencies are invited to file comments on the described application. A copy of the application may be obtained by agencies directly from the Applicant. If an agency does not file comments within the time specified for filing comments, it will be presumed to have no comments. One copy of an

agency's comments must also be sent to the Applicant's representatives.

Linwood A. Watson, Jr.,

Acting Secretary.

[FR Doc. 99–14960 Filed 6–11–99; 8:45 am]

BILLING CODE 6717–01–M

DEPARTMENT OF ENERGY

Federal Energy Regulatory Commission

Notice; The Following Notice of Meeting Is Published Pursuant to Section 3(A) of the Government in the Sunshine Act (Pub. L. 94–409), 5 U.S.C. 552B

June 9, 1999.

AGENCY HOLDING MEETING: FEDERAL ENERGY REGULATORY COMMISSION.

DATE AND TIME: JUNE 16, 1999 10:00 A.M.

PLACE: ROOM 2C, 888 FIRST STREET, N.E., WASHINGTON, D.C. 20426.

STATUS: OPEN.

MATTERS TO BE CONSIDERED: AGENDA.

*NOTE—ITEMS LISTED ON THE AGENDA MAY BE DELETED WITHOUT FURTHER NOTICE.

CONTACT PERSON FOR MORE INFORMATION: DAVID P. BOERGERS, SECRETARY, TELEPHONE (202) 208–0400. FOR A RECORDING LISTING ITEMS STRICKEN FROM OR ADDED TO THE MEETING, CALL (202) 208–1627.

THIS IS A LIST OF MATTERS TO BE CONSIDERED BY THE COMMISSION. IT DOES NOT INCLUDE A LISTING OF ALL PAPERS RELEVANT TO THE ITEMS ON THE AGENDA; HOWEVER, ALL PUBLIC DOCUMENTS MAY BE EXAMINED IN THE REFERENCE AND INFORMATION CENTER.

Consent Agenda—Hydro; 721th Meeting—June 16, 1999; Regular Meeting (10:00 a.m.)

CAH–1.
DOCKET# P–2213, 001, PUBLIC UTILITY DISTRICT NO. 1 OF COWLITZ COUNTY, WASHINGTON
CAH–2.
OMITTED
CAH–3.
DOCKET# P–10703, 005, CITY OF CENTRALIA (WASHINGTON) LIGHT DEPARTMENT
CAH–4.
DOCKET# P–11452, 002, NORTHERN CALIFORNIA POWER AGENCY
OTHER#S P–11477, 002, NORTHERN CALIFORNIA POWER AGENCY
CAH–5.
DOCKET# P–UL96–1, 002, BLACKSTONE RIVER DEPOT STREET TRUST
CAH–6.
DOCKET# P–710, 014, WISCONSIN POWER & LIGHT DEPARTMENT
CAH–7.
DOCKET# 2569, 037, NIAGARA MOHAWK POWER CORPORATION

Consent Agenda—Electric

CAE–1.
DOCKET# ER99–2300, 000, CLECO TRADING & MARKETING LLC
OTHER#S ER99–2541, 000, CARTHAGE ENERGY, LLC
ER99–2602, 000/ LSP-KENDALL ENERGY, LLC
ER99–2769, 000, FOOTE CREEK III, LLC
ER99–2858, 000, MEP PLEASANT HILL, LLC
ER99–2895, 000, AMOCO ENERGY TRADING CORPORATION
CAE–2.
DOCKET# ER99–2340, 000, PJM INTERCONNECTION, L.L.C.
CAE–3.
DOCKET# ER99–2730, 000 CALIFORNIA INDEPENDENT SYSTEM OPERATOR CORPORATION
OTHER#S EL99–67, 000, CALIFORNIA INDEPENDENT SYSTEM OPERATOR CORPORATION
CAE–4.
DOCKET# ER99–2915, 000, INDECK-OLEAN LIMITED PARTNERSHIP
CAE–5.
DOCKET# ER99–2738, 000, NORTHEAST UTILITIES SERVICE COMPANY
CAE–6.
DOCKET# ER99–1473, 000, SEMPRA ENERGY TRADING CORPORATION
CAE–7.
DOCKET# ER99–2763, 000, WESTERN SYSTEMS POWER POOL
CAE–8.
DOCKET# ER99–2770, 000, FLORIDA POWER & LIGHT COMPANY
OTHER#S EL99–69, 000, FLORIDA POWER & LIGHT COMPANY
CAE–9.
DOCKET# ER99–2649, 000, MID-CONTINENT AREA POWER POOL
CAE–10.
DOCKET# EL95–71, 000, PUBLIC SERVICE COMPANY OF NEW HAMPSHIRE V. NEW HAMPSHIRE ELECTRIC COOPERATIVE, INC.
CAE–11.
DOCKET# ER99–2668, 000, AUTOMATED POWER EXCHANGE, INC.
CAE–12.
DOCKET# ER98–3853, 001, NEW ENGLAND POWER POOL
CAE–13.
DOCKET# EF99–5191, 000, UNITED STATES DEPARTMENT OF ENERGY—WESTERN AREA POWER ADMINISTRATION (PACIFIC NORTHWEST—PACIFIC INTERTIE PROJECT)
CAE–14.
DOCKET# EC99–34, 000, NIAGARA MOHAWK POWER CORPORATION AND ERIE BOULEVARD HYDROPOWER, L.P.
OTHER#S ER99–1764, 000, ERIE BOULEVARD HYDROPOWER, L.P.
CAE–15.
DOCKET# EC99–49, 000, NEW ENGLAND POWER COMPANY, MASSACHUSETTS ELECTRIC COMPANY, THE NARRAGANSETT ELECTRIC COMPANY, NEW ENGLAND ELECTRIC TRANSMISSION CORPORATION, NEW ENGLAND HYDRO-TRANSMISSION CORPORATION, NEW ENGLAND HYDRO-TRANSMISSION ELECTRIC COMPANY, INC., ALLENERGY MARKETING COMPANY, L.L.C., AND NGG HOLDINGS LLC
CAE–16.
DOCKET# OA96–153, 000, ARIZONA PUBLIC SERVICE COMPANY
OTHER#S ER96–2401, 000, ARIZONA PUBLIC SERVICE COMPANY
CAE–17.
DOCKET# ER99–1663, 000, MONTAUP ELECTRIC COMPANY
CAE–18.
DOCKET# ER99–1770, 000, CALIFORNIA INDEPENDENT SYSTEM OPERATOR CORPORATION
CAE–19.
OMITTED
CAE–20.
DOCKET# ER97–1165, 000, DUQUESNE LIGHT COMPANY
OTHER#S ER97–1167, 000, CLEVELAND ELECTRIC ILLUMINATING COMPANY AND TOLEDO EDISON COMPANY
ER97–1169, 000, OHIO EDISON COMPANY AND PENNSYLVANIA POWER COMPANY
OA97–221, 000, DUQUESNE LIGHT COMPANY
CAE–21.
DOCKET# EC99–36, 000, MONTANA POWER COMPANY AND PP&L MONTANA, LLC
OTHER#S ER99–1799, 000, MONTANA POWER COMPANY AND PP&L MONTANA, LLC
CAE–22.
DOCKET# EC99–40, 000, CENTRAL ILLINOIS LIGHT COMPANY AND THE AES CORPORATION
CAE–23.
DOCKET# ER99–2781, 000, DELMARVA POWER & LIGHT COMPANY AND ATLANTIC CITY ELECTRIC COMPANY
OTHER#S ER99–1345, 000, DELMARVA POWER & LIGHT COMPANY AND ATLANTIC CITY ELECTRIC COMPANY
CAE–24.
DOCKET# EC99–50, 000, PACIFICORP
CAE–25.
DOCKET# ER99–1142, 000, NEW ENGLAND POWER POOL
CAE–26.
DOCKET# ER98–3274, 000, CENTRAL POWER AND LIGHT COMPANY, WEST TEXAS UTILITIES COMPANY, PUBLIC SERVICE COMPANY OF OKLAHOMA AND SOUTHWESTERN ELECTRIC POWER COMPANY
CAE–27.
DOCKET# ER99–1132, 000, DUQUESNE LIGHT COMPANY
CAE–28.
DOCKET# ER98–2179, 002, NEW YORK STATE ELECTRIC & GAS CORPORATION AND NGE GENERATION, INC.
OTHER#S ER98–4040, 003, PG&E ENERGY TRADING-POWER, L.P.
ER98–4176, 003, EL PASO POWER SERVICES COMPANY

ER98–4275, 002, VITOL GAS AND ELECTRIC LLC
ER98–4348, 002, COOK INLET ENERGY SUPPLY, L.P.
CAE–29.
DOCKET# EL99–62, 000, AQUILA ENERGY MARKETING CORPORATION V. NIAGARA MOHAWK POWER CORPORATION AND NIAGARA MOHAWK ENERGY MARKETING, INC.
CAE–30.
DOCKET# EL99–49, 000, UNITED STATES DEPARTMENT OF ENERGY—BONNEVILLE POWER ADMINISTRATION
OTHER#S EL99–51, 000, ENRON POWER MARKETING, INC. V. UNITED STATES DEPARTMENT OF ENERGY—BONNEVILLE POWER ADMINISTRATION
NJ97–3, 006, UNITED STATES DEPARTMENT OF ENERGY—BONNEVILLE POWER ADMINISTRATION
CAE–31.
DOCKET# EL96–70, 000, PACIFIC GAS & ELECTRIC COMPANY V. RED TOP COGENERATION, L.P.
OTHER#S EL96–70, 001, PACIFIC GAS & ELECTRIC COMPANY V. RED TOP COGENERATION, L.P.
EL96–70, 002, PACIFIC GAS & ELECTRIC COMPANY V. RED TOP COGENERATION, L.P.
QF84–329, 001, PACIFIC GAS & ELECTRIC COMPANY V. RED TOP COGENERATION, L.P.
QF94–329, 002, PACIFIC GAS & ELECTRIC COMPANY V. RED TOP COGENERATION, L.P.
CAE–32.
DOCKET# EL99–56, 000, TOWN OF NORWOOD, MASSACHUSETTS
CAE–33.
DOCKET# EL98–55, 000, INDIANA MUNICIPAL POWER AGENCY V. PSI ENERGY, INC.
CAE–34.
DOCKET# EL99–44, 000, ARIZONA PUBLIC SERVICE COMPANY V. IDAHO POWER COMPANY
CAE–35.
DOCKET# EL99–58, 000, VILLAGE OF FREEPORT, NEW YORK V. CONSOLIDATED EDISON COMPANY OF NEW YORK, INC.
CAE–36.
DOCKET# OA97–418, 004, DAYTON POWER & LIGHT COMPANY
OTHER#S OA97–130, 003, MINNESOTA POWER & LIGHT COMPANY
OA97–185, 002, OKLAHOMA GAS AND ELECTRIC COMPANY
OA97–400, 003, SOUTHWESTERN PUBLIC SERVICE COMPANY
OA97–406, 004, NORTHERN STATES POWER COMPANY (MINNESOTA) AND NORTHERN STATES POWER COMPANY (WISCONSIN)
OA97–423, 003, PP&L, INC.
OA97–455, 004, IDAHO POWER COMPANY
OA97–515, 003, PACIFIC GAS AND ELECTRIC COMPANY
OA97–590, 003, IDAHO POWER COMPANY
OA97–594, 003, PP&L, INC.
CAE–37.
DOCKET# ER98–11, 000, LONG ISLAND LIGHTING COMPANY
OTHER#S EL98–22, 000, LONG ISLAND LIGHTING COMPANY

Consent Agenda—Gas and Oil

CAG–1.
DOCKET# SA99–16, 000, THE MONTANA POWER COMPANY
CAG–2.
DOCKET# RP99–271, 001, WILLIAMS GAS PIPELINES CENTRAL, INC.
OTHER#S RP89–183, 092, WILLIAMS GAS PIPELINES CENTRAL, INC.
CAG–3.
DOCKET# RP99–282, 000, RELIANT ENERGY GAS TRANSMISSION COMPANY
CAG–4. OMITTED
CAG–5.
DOCKET# PR99–6, 000, PG&E GAS TRANSMISSION TECO INC.
CAG–6.
DOCKET# PR99–8, 000, PROVIDENCE GAS COMPANY
CAG–7.
DOCKET# PR99–5, 000, DOW PIPELINE COMPANY
OTHER#S PR99–5, 001, DOW PIPELINE COMPANY
CAG–8.
DOCKET# RP98–364, 002, SOUTH GEORGIA NATURAL GAS COMPANY
OTHER#S RP99–251, 002, SOUTH GEORGIA NATURAL GAS COMPANY
CAG–9.
DOCKET# RP99–159, 000, SOUTHERN NATURAL GAS COMPANY
OTHER#S RP99–159, 001, SOUTHERN NATURAL GAS COMPANY
CAG–10.
DOCKET# RP99–252, 002, SEA ROBIN PIPELINE COMPANY
CAG–11.
DOCKET# RP99–253, 003, SOUTHERN NATURAL GAS COMPANY
OTHER#S RP98–363, 002, SOUTHERN NATURAL GAS COMPANY
CAG–12.
DOCKET# RP99–254, 001, DESTIN PIPELINE COMPANY, L.L.C.
CAG–13.
DOCKET# RP99–298, 000, ANR PIPELINE COMPANY
CAG–14.
DOCKET# RP98–117, 005, K N INTERSTATE GAS TRANSMISSION COMPANY
CAG–15.
DOCKET# RP98–203, 006, NORTHERN NATURAL GAS COMPANY
OTHER#S RP98–203, 005, NORTHERN NATURAL GAS COMPANY
CAG–16.
DOCKET# RP96–348, 008, PANHANDLE EASTERN PIPE LINE COMPANY
OTHER#S RP96–348, 007, PANHANDLE EASTERN PIPE LINE COMPANY
CAG–17.
DOCKET# RP98–52, 022, WILLIAMS GAS PIPELINES CENTRAL, INC.
CAG–18.
DOCKET# RP99–227, 001, HIGH ISLAND OFFSHORE SYSTEM, L.L.C.
CAG–19.
DOCKET# RP97–375, 007, WYOMING INTERSTATE COMPANY, LTD
CAG–20.
DOCKET# CP95–376, 002, MISSISSIPPI RIVER TRANSMISSION CORPORATION AND NORAM FIELD SERVICES CORPORATION
CAG–21.
DOCKET# CP96–152, 013, KANSAS PIPELINE COMPANY
OTHER#S CP96–152, 014, KANSAS PIPELINE COMPANY
CAG–22.
DOCKET# CP98–159, 002, PHELPS DODGE CORPORATION V. EL PASO NATURAL GAS COMPANY
CAG–23.
DOCKET# CP99–113, 000, ALGONQUIN LNG, INC.
OTHER#S PR99–8, 000, PROVIDENCE GAS COMPANY
CAG–24.
DOCKET# CP96–606, 001, TEXAS EASTERN TRANSMISSION CORPORATION
CAG–25.
DOCKET# CP99–96, 000, CNG TRANSMISSION CORPORATION
OTHER#S CP99–96, 001, CNG TRANSMISSION CORPORATION
CAG–26.
DOCKET# CP99–152, 000, CANADIAN-MONTANA PIPE LINE CORPORATION
CAG–27.
DOCKET# PR99–9, 000, THE UNION LIGHT, HEAT AND POWER COMPANY
OTHER#S PR99–9, 001, THE UNION LIGHT, HEAT AND POWER COMPANY
CAG–28.
OMITTED
CAG–29.
DOCKET# RP97–278, 002, MIDCOAST INTERSTATE TRANSMISSION, INC.
CAG–30.
DOCKET# RP94–72, 009, IROQUOIS GAS TRANSMISSION SYSTEM, L.P.
OTHER#S FA92–59, 007, IROQUOIS GAS TRANSMISSION SYSTEM, L.P.
RP97–126, 000, IROQUOIS GAS TRANSMISSION SYSTEM, L.P.

Hydro Agenda

H–1.
RESERVED

Electric Agenda

E–1.
RESERVED

Oil and Gas Agenda

I.
PIPELINE RATE MATTERS
PR–1.
RESERVED
II.
PIPELINE CERTIFICATE MATTERS
PC–1.
OMITTED

David P. Boergers,

Secretary.

[FR Doc. 99–15087 Filed 6–10–99; 11:30 am]

BILLING CODE 6717–01–P

ENVIRONMENTAL PROTECTION AGENCY

Notice of Oxygenate Use in Gasoline Panel Meeting

AGENCY: Environmental Protection Agency.

ACTION: Notice.

SUMMARY: On November 30, 1998, U.S. Environmental Protection Agency Administrator Carol M. Browner announced the creation of a blue-ribbon panel of leading experts from the public health and scientific communities, automotive fuels industry, water utilities, and local and State government to review the important issues posed by the use of methyl tertiary butylether (MTBE) and other oxygenates in gasoline. EPA created the panel to gain a better understanding of the public health concerns raised by the discovery of MTBE in some water supplies. The panel is chaired by Mr. Daniel Greenbaum, President of the Health Effects Institute (HEI) of Cambridge, Massachusetts.

This notice announces the time and place for the next meeting of the panel.

DATES: The blue-ribbon panel reviewing the use of oxygenates in gasoline will conduct its final meeting on Thursday and Friday, June 24 and 25, 1999, in Arlington, VA. The meeting will be held from noon to approximately 8:00 p.m. on Thursday, June 24th and from 8:30 a.m. until approx. 5:30 p.m. on Friday, June 25th.

ADDRESSES: The meeting will be held at the Hilton Crystal City at National Airport, 2399 Jefferson Davis Hwy, Arlington, VA.

FOR FURTHER INFORMATION CONTACT: Karen Smith at U.S. Environmental Protection Agency Office of Air and Radiation, 401 M Street, SW (6406J), Washington, DC 20460, (202) 564–9674, or John Brophy at (202) 564–9068. Information can also be found at *www.epa.gov/oms/consumer/fuels/oxypanel/blueribb.htm*.

SUPPLEMENTARY INFORMATION: This is the sixth and final meeting in a series of meetings at locations around the country to hear from regional and national experts on the facts concerning oxygenate use in fuel. There will be no open public comment period during this meeting. Written comments to the panel can be mailed to US EPA, 401 M Street, SW, Mail Code 6406J (Attn: Blue-Ribbon Panel), Washington, DC 20460. Panel members will be provided with copies of all written submissions.

Dated: June 8, 1999.

Margo T. Oge,

Director, Office of Mobile Sources.

[FR Doc. 99–15001 Filed 6–11–99; 8:45 am]

BILLING CODE 6560–50–P

ENVIRONMENTAL PROTECTION AGENCY

[FRL–6359–1]

Science Advisory Board; Notification of Public Advisory Committee Meeting

Pursuant to the Federal Advisory Committee Act, Public Law 92–463, notice is hereby given that the Science Advisory Board's (SAB) Executive Committee (EC) will conduct a public teleconference meeting on Wednesday, June 30, 1999, between the hours of 11:00 a.m. and 2:00 p.m., Eastern Time.

The meeting will be coordinated through a conference call connection in Room 3709 of the Waterside Mall, U.S. Environmental Protection Agency, 401 M Street SW, Washington, DC 20460. The public is welcome to attend the meeting physically or through a telephonic link. Additional instructions about how to participate in the conference call can be obtained by calling Ms. Priscilla Tillery-Gadson at (202) 260–4126, and via e-mail at: <tillery-priscilla@epa.gov> by June 21, 1999.

During this meeting the Executive Committee plans to review draft reports from its Committees. Anticipated drafts include: (a) Advisory on the White Paper on the Nature and Scope of Issues on Adoption of Model Use Acceptability Criteria (Environmental Models Subcommittee of the Science Advisory Board); (b) Review of the Wet Weather Flows and Urban Infrastructure Research Plans (Environmental Engineering Committee); (c) Review of the Environmental Endocrine Disruptors Screening Program (Executive Committee Subcommittee); and (d) Review of the Comparative Risk Framework Method (Drinking Water Committee). It is possible that other draft reports may be available for review at this meeting as well. Please check with Ms. Tillery-Gadson prior to the meeting to confirm any changes in the planned review schedule.

FOR FURTHER INFORMATION CONTACT: Any member of the public wishing further information concerning the meeting or wishing to submit comments should contact Dr. Donald G. Barnes, Designated Federal Officer for the Executive Committee, Science Advisory Board (1400), U.S. Environmental Protection Agency, Washington, DC 20460; telephone (202) 260–4126; FAX (202) 260–9232; and via e-mail at: barnes.don@epa.gov. Copies of the draft reports are available from the same source, or from the SAB Website (http://www.epa.gov/sab) at least one week prior to the meeting.

General Information on Providing Oral or Written Comments at SAB Meetings

The Science Advisory Board expects that public statements presented at its meetings will not be repetitive of previously submitted oral or written statements. In general, each individual or group making an oral presentation will be limited to a total time of ten minutes. For teleconference meetings, opportunities for oral comment will usually be limited to no more than three minutes per speaker and no more than fifteen minutes total. Written comments (at least 35 copies) received in the SAB Staff Office sufficiently prior to a meeting date (usually one week before the meeting), may be mailed to the relevant SAB committee or subcommittee; comments received too close to the meeting date will normally be provided to the committee at its meeting, or mailed soon after receipt by the Agency.

Additional information concerning the Science Advisory Board, its structure, function, and composition, may be found on the SAB Website (http://www.epa.gov/sab) and in The Annual Report of the Staff Director which is available from the SAB Publications Staff at (202) 260–4126 or via fax at (202) 260–1889.

Meeting Access

Individuals requiring special accommodation at this teleconference meeting, including wheelchair access to the conference room, should contact Dr. Barnes at least five business days prior to the meeting so that appropriate arrangements can be made.

Dated: June 8, 1999.

Donald G. Barnes,

Staff Director, Science Advisory Board.

[FR Doc. 99–15016 Filed 6–11–99; 8:45 am]

BILLING CODE 6560–50–P

ENVIRONMENTAL PROTECTION AGENCY

[OPPTS–51929; FRL–6085–7]

Certain New Chemicals; Receipt and Status Information

AGENCY: Environmental Protection Agency (EPA).

ACTION: Notice.

SUMMARY: Section 5 of the Toxic Substances Control Act (TSCA) requires any person who intends to manufacture (defined by statute to include import) a new chemical (i.e., a chemical not on the TSCA Inventory) to notify EPA and comply with the statutory provisions pertaining to the manufacture of new chemicals. Under sections 5(d)(2) and 5(d)(3) of TSCA, EPA is required to publish a notice of receipt of a premanufacture notice (PMN) or an application for a test marketing exemption (TME), and to publish periodic status reports on the chemicals under review and the receipt of notices of commencement to manufacture those chemicals. This status report, which covers the period from May 1, 1999, to May 14, 1999, consists of the PMNs and TMEs, both pending or expired, and the notices of commencement to manufacture a new chemical that the Agency has received under TSCA section 5 during this time period.

FOR FURTHER INFORMATION CONTACT: Christine Augustyniak, Associate Director, Environmental Assistance Division (7408), Office of Pollution Prevention and Toxics, Environmental Protection Agency, 401 M St., S.W., Washington, DC 20460; telephone numbers: 202–554–1404 and TDD: 202–554–0551; e-mail address: TSCA-Hotline@epa.gov.

SUPPLEMENTARY INFORMATION:

I. Does this Action Apply to Me?

This action is directed to the public in general. As such, the Agency has not attempted to describe the specific entities that this action may apply to. Although others may be affected, this action applies directly to the submitter of the premanufacture notices addressed in the action. If you have any questions regarding the applicability of this action to a particular entity, consult the person listed in the ''FOR FURTHER INFORMATION CONTACT'' section.

II. How Can I Get Additional Information, Including Copies of this Document and Other Related Documents?

A. *Electronically*. You may obtain copies of this document and certain other available documents from the EPA Internet Home Page at http://www.epa.gov/. On the Home Page select ''Laws and Regulations'' and then look up the entry for this document under the ''Federal Register - Environmental Documents.'' You can also go directly to the ''Federal Register'' listings at http://www.epa.gov/fedrgstr/.

B. *In person*. The Agency has established an official record for this action under docket control number OPPTS–51929. The official record consists of the documents specifically referenced in this action, any public comments received during an applicable comment period, and other information related to this action, including any information claimed as confidential business information (CBI). This official record includes the documents that are physically located in the docket, as well as the documents that are referenced in those documents. The public version of the official record does not include any information claimed as CBI. The public version of the official record, which includes printed, paper versions of any electronic comments submitted during an applicable comment period, is available for inspection in the TSCA Nonconfidential Information Center, North East Rm. B-607, Waterside Mall, 401 M St., SW., Washington, DC. The Center is open from 12 noon to 4 p.m., Monday through Friday, excluding legal holidays. The telephone number of the Center is 202–260–7099.

C. *By phone*. If you need additional information about this action, you may also contact the person identified in the ''FOR FURTHER INFORMATION CONTACT '' section.

III. Why is EPA taking this Action?

Section 5 of TSCA requires any person who intends to manufacture (defined by statute to include import) a new chemical (i.e., a chemical not on the TSCA Inventory) to notify EPA and comply with the statutory provisions pertaining to the manufacture of new chemicals. Under sections 5(d)(2) and 5(d)(3) of TSCA, EPA is required to publish a notice of receipt of a PMN or an application for a TME, and to publish periodic status reports on the chemicals under review and the receipt of notices of commencement to manufacture those chemicals. This status report, which covers the period from May 1, 1999, to May 15, 1999, consists of the PMNs and TMEs, both pending or expired, and the notices of commencement to manufacture a new chemical that the Agency has received under TSCA section 5 during this time period.

IV. Receipt and Status Report for PMNs and TMEs

This status report identifies the PMNs and TMEs, both pending or expired, and the notices of commencement to manufacture a new chemical that the Agency has received under TSCA section 5 during this time period. If you are interested in information that is not included in the following tables, you may contact EPA as described in Unit II above to access additional non-CBI information that may be available.

In table I, EPA provides the following information (to the extent that such information is not claimed as CBI) on the PMNs received by EPA during this period: the EPA case number assigned to the PMN; the date the PMN was received by EPA; the projected end date for EPA's review of the PMN; the submitting manufacturer; the potential uses identified by the manufacturer in the PMN; and the chemical identity.

I. 47 Premanufacture Notices Received From: 05/01/99 to 05/15/99

Case No.	Received Date	Projected Notice End Date	Manufacturer/Importer	Use	Chemical
P–99–0762	05/03/99	08/01/99	CBI	(S) Base resin for uv/eb (ultraviolet light/electron beam) cured coating formulations	(G) Polyetherdiol polymer with an aliphatic isocyanate and hydroxyethyl methacrylate
P–99–0763	05/03/99	08/01/99	CBI	(G) Base resin for free-radical cured formulations for adhesives	(G) Polyether polyol polymer with an aromatic isocyanate and hydroxyethyl methacrylate
P–99–0772	05/04/99	08/02/99	Condea Servo LLC	(S) Dispersing agent in solvent-borne paints; dispersing agent in solvent-borne paint pigment paste	(S) 2-propenoic acid, 2-methyl-, methyl ester, telomer with 1,6-diisocyanatohexane, 2-ethylhexyl 2-propenoate and 2-mercaptoethanol*
P–99–0773	05/04/99	08/02/99	Purac America, Inc.	(S) Metal scavenger	(S) Propanoic acid, 2-hydroxy-, monopotassium salt, (2s)-*

I. 47 Premanufacture Notices Received From: 05/01/99 to 05/15/99—Continued

Case No.	Received Date	Projected Notice End Date	Manufacturer/Importer	Use	Chemical
P–99–0774	05/06/99	08/04/99	Dupont Dow Elastomers, L.L.C.	(G) Molding resin	(G) Vinylidene fluoride copolymer
P–99–0775	05/06/99	08/04/99	CBI	(G) Gear oil viscosity index improver	(G) Alkyl methacrylate copolymer
P–99–0776	05/06/99	08/04/99	CBI	(G) Gear oil viscosity index improver	(G) Alkyl methacrylate copolymer
P–99–0777	05/06/99	08/04/99	CBI	(G) Gear oil viscosity index improver	(G) Alkyl methacrylate copolymer
P–99–0778	05/07/99	08/05/99	CBI	(G) Open non-dispersive (coatings material)	(G) Fatty acid modified polyurethane resin
P–99–0779	05/07/99	08/05/99	Rahn USA Corporation	(S) Uv/eb inks; uv/eb coatings; uv/eb adhesive; uv/eb fillers	(G) Polyester acrylate
P–99–0780	05/07/99	08/05/99	Air Products and Chemicals Inc.	(G) Use as a component of water-based adhesives	(G) Carboxylated, acrylate vinyl ester copolymer
P–99–0781	05/07/99	08/05/99	CBI	(S) Negative charge control agent	(G) Aluminate, bis[[(substituted)azo][hydroxyphenylbenzenesulfonamidato] hydrogen compound with tetramethylpiperidinamine
P–99–0782	05/07/99	08/05/99	Rikamerica Incorporated	(S) Nucleating agent for polymers	(G) Naphthalene dicarboxaminde
P–99–0783	05/10/99	08/08/99	Dystar L. P.	(S) Dyeing of wood fiber	(G) Chromate(2-), [3-hydroxy-4-[(2-hydroxy-1-naphthalenyl) azo]-7-nitro-1-substituted] [*n*-[7-hydroxy-8-[(2-hydroxy-5-nitrophenyl)azo]-1-substituted]-, salt
P–99–0784	05/10/99	08/08/99	CBI	(S) Industrial coatings	(G) Polyurethane polyol
P–99–0785	05/10/99	08/08/99	CBI	(G) Industrial coating binder component	(G) Aromatic polyester modified with an aliphatic epoxide
P–99–0786	05/10/99	08/08/99	Cytec Industries Inc.	(G) Flocculant	(G) Liquid cationic polymer
P–99–0787	05/10/99	08/08/99	CBI	(G) Viscosity index improver	(G) Alkyl methacrylate copolymer
P–99–0788	05/12/99	08/10/99	CBI	(G) Componenet of foam	(G) Polyester polyol
P–99–0789	05/12/99	08/10/99	CBI	(G) Componenet of foam	(G) Polyester polyol
P–99–0790	05/12/99	08/10/99	CBI	(G) Componenet of foam	(G) Polyester polyol
P–99–0791	05/12/99	08/10/99	CBI	(G) Componenet of foam	(G) Polyester polyol
P–99–0792	05/12/99	08/10/99	CBI	(G) Componenet of foam	(G) Polyester polyol
P–99–0793	05/12/99	08/10/99	CBI	(G) Componenet of foam	(G) Polyester polyol
P–99–0794	05/12/99	08/10/99	CBI	(G) Coating component	(G) Acrylic acid, polymer with alkyl acrylates and substituted ethene
P–99–0795	05/11/99	08/09/99	CBI	(G) Destructive use as a fuel additive	(G) Alkyl butanedioic acid, metal salt
P–99–0796	05/12/99	08/10/99	Percy International ltd.	(S) Diluent for polyurethane coatings	(S) Carbonic acid, methyl 2-[2-(1-methylethyl)-3-oxazolidinyl]ethyl ester*
P–99–0797	05/12/99	08/10/99	CBI	(G) Ink component	(G) Cycloaliphatic olefin distillate stream polymerized with substituted alkyl phenol
P–99–0798	05/12/99	08/10/99	CBI	(G) Component of foam	(G) Polyester polyol
P–99–0799	05/12/99	08/10/99	CBI	(G) Component of foam	(G) Polyester polyol
P–99–0800	05/12/99	08/10/99	CBI	(G) Component of foam	(G) Polyester polyol
P–99–0801	05/12/99	08/10/99	CBI	(G) Component of foam	(G) Polyester polyol
P–99–0802	05/12/99	08/10/99	CBI	(G) Component of foam	(G) Polyester polyol
P–99–0803	05/12/99	08/10/99	CBI	(G) Component of foam	(G) Polyester polyol
P–99–0804	05/12/99	08/10/99	H.B. Fuller Company	(S) Panel assembly adhesive; volumes are a total for all substances combined	(G) Modified polyester isocyanate prepolymer
P–99–0805	05/12/99	08/10/99	H.B. Fuller Company	(S) Panel assembly adhesive; volumes are a total for all substances combined	(G) Modified polyester isocyanate prepolymer
P–99–0806	05/12/99	08/10/99	H.B. Fuller Company	(S) Panel assembly adhesive; volumes are a total for all substances combined	(G) Modified polyester isocyanate prepolymer
P–99–0807	05/12/99	08/10/99	H.B. Fuller Company	(S) Panel assembly adhesive; volumes are a total for all substances combined	(G) Modified polyester isocyanate prepolymer
P–99–0808	05/12/99	08/10/99	E. I. Dupont de Nemours & Company, Inc.	(G) Molding and adhesive resin	(G) Ethylene interpolymer
P–99–0809	05/12/99	08/10/99	E. I. Dupont de Nemours & Company, Inc.	(G) Molding and adhesive resin	(G) Ethylene interpolymer
P–99–0810	05/12/99	08/10/99	E. I. Dupont de Nemours & Company, Inc.	(G) Molding and adhesive resin	(G) Ethylene interpolymer

I. 47 Premanufacture Notices Received From: 05/01/99 to 05/15/99—Continued

Case No.	Received Date	Projected Notice End Date	Manufacturer/Importer	Use	Chemical
P–99–0811	05/12/99	08/10/99	E. I. Dupont de Nemours & Company, Inc.	(G) Molding and adhesive resin	(G) Ethylene interpolymer
P–99–0812	05/12/99	08/10/99	E. I. Dupont de Nemours & Company, Inc.	(G) Molding and adhesive resin	(G) Ethylene interpolymer
P–99–0813	05/12/99	08/10/99	E. I. Dupont de Nemours & Company, Inc.	(G) Molding and adhesive resin	(G) Ethylene interpolymer
P–99–0814	05/13/99	08/11/99	CBI	(S) Base resin for uv/eb (ultraviolet light/electron beam) curable coatings and adhesives	(G) Poly(oxy-1,4-butanediyl), α-hydro-omega-hydroxy-polymer with a substituted alcohol and 1,1′-methylenebis[4-isocyanatocyclohexane], 2-hydroxyethyl acrylate-blocked
P–99–0815	05/13/99	08/11/99	CBI	(G) Corrosion inhibitor	(G) Complex acids/amine condensation products
P–99–0817	05/13/99	08/11/99	CBI	(G) Quality control additive	(G) Salt of an acrylic acid-acrylamide terpolymer

List of Subjects

Environmental protection, Premanufacture notices.

Dated: June 2, 1999.

Oscar Morales,

Acting Director, Information Management Division, Office of Pollution Prevention and Toxics.

[FR Doc. 99–15007 Filed 6–11–99; 8:45 am]

BILLING CODE 6560–50–F

ENVIRONMENTAL PROTECTION AGENCY

[OPPTS–51928; FRL–6079–6]

Certain New Chemicals; Receipt and Status Information

AGENCY: Environmental Protection Agency (EPA).

ACTION: Notice.

SUMMARY: Section 5 of the Toxic Substances Control Act (TSCA) requires any person who intends to manufacture (defined by statute to include import) a new chemical (i.e., a chemical not on the TSCA Inventory) to notify EPA and comply with the statutory provisions pertaining to the manufacture of new chemicals. Under sections 5(d)(2) and 5(d)(3) of TSCA, EPA is required to publish a notice of receipt of a premanufacture notice (PMN) or an application for a test marketing exemption (TME), and to publish periodic status reports on the chemicals under review and the receipt of notices of commencement to manufacture those chemicals. This status report, which covers the period from April 1, to April 30, 1999, consists of the PMNs and TMEs, both pending or expired, and the notices of commencement to manufacture a new chemical that the Agency has received under TSCA section 5 during this time period.

FOR FURTHER INFORMATION CONTACT: Christine Augustyniak, Associate Director, Environmental Assistance Division (7408), Office of Pollution Prevention and Toxics, Environmental Protection Agency, 401 M St., S.W., Washington, DC 20460; telephone numbers: 202–554–1404 and TDD: 202–554–0551; e-mail address: TSCA-Hotline@epa.gov.

SUPPLEMENTARY INFORMATION:

I. Does this Action Apply to Me?

This action is directed to the public in general. As such, the Agency has not attempted to describe the specific entities that this action may apply to. Although others may be affected, this action applies directly to the submitter of the premanufacture notices addressed in the action. If you have any questions regarding the applicability of this action to a particular entity, consult the person listed in the ''FOR FURTHER INFORMATION CONTACT'' section.

II. How Can I Get Additional Information, Including Copies of this Document and Other Related Documents?

A. *Electronically*. You may obtain copies of this document and certain other available documents from the EPA Internet Home Page at http://www.epa.gov/. On the Home Page select ''Laws and Regulations'' and then look up the entry for this document under the ''Federal Register - Environmental Documents.'' You can also go directly to the ''Federal Register'' listings at http://www.epa.gov/fedrgstr/.

B. *In person*. The Agency has established an official record for this action under docket control number OPPTS–51928. The official record consists of the documents specifically referenced in this action, any public comments received during an applicable comment period, and other information related to this action, including any information claimed as confidential business information (CBI). This official record includes the documents that are physically located in the docket, as well as the documents that are referenced in those documents. The public version of the official record does not include any information claimed as CBI. The public version of the official record, which includes printed, paper versions of any electronic comments submitted during an applicable comment period, is available for inspection in the TSCA Nonconfidential Information Center, North East Rm. B-607, Waterside Mall, 401 M St., SW., Washington, DC. The Center is open from 12 noon to 4 p.m., Monday through Friday, excluding legal holidays. The telephone number of the Center is 202–260–7099.

C. *By phone*. If you need additional information about this action, you may also contact the person identified in the ''FOR FURTHER INFORMATION CONTACT '' section.

III. Why is EPA taking this Action?

Section 5 of TSCA requires any person who intends to manufacture (defined by statute to include import) a new chemical (i.e., a chemical not on

the TSCA Inventory) to notify EPA and comply with the statutory provisions pertaining to the manufacture of new chemicals. Under sections 5(d)(2) and 5(d)(3) of TSCA, EPA is required to publish a notice of receipt of a PMN or an application for a TME, and to publish periodic status reports on the chemicals under review and the receipt of notices of commencement to manufacture those chemicals. This status report, which covers the period from April 1, to April 30, 1999, consists of the PMNs and TMEs, both pending or expired, and the noticesof commencement to manufacture a new chemical that the Agency has received under TSCA section 5 during this time period.

IV. Receipt and Status Report for PMNs and TMEs

This status report identifies the PMNs and TMEs, both pending or expired, and the notices of commencement to manufacture a new chemical that the Agency has received under TSCA section 5 during this time period. If you are interested in information that is not included in the following tables, you may contact EPA as described in Unit II above to access additional non-CBI information that may be available.

In table I, EPA provides the following information (to the extent that such information is not claimed as CBI) on the PMNs received by EPA during this period: the EPA case number assigned to the PMN; the date the PMN was received by EPA; the projected end date for EPA's review of the PMN; the submitting manufacturer; the potential uses identified by the manufacturer in the PMN; and the chemical identity.

I. 82 Premanufacture Notices Received From: 04/01/99 to 04/30/99

Case No.	Received Date	Projected Notice End Date	Manufacturer/Importer	Use	Chemical
P–99–0651	04/01/99	06/30/99	CBI	(G) Processing additive	(G) Polymer of acrylamide and substituted acrylates
P–99–0655	04/01/99	06/30/99	CIBA Specialty Chemicals Corp.-Colors Div.	(G) Texile dye	(G) 2-anthracenesulfonic acid, 4-[[4-(acetylamino)phenyl]amino]-1-amino-9,10-dihydro-9,10-dioxo-, compd. with alkanol amine-alkylene oxide polymer
P–99–0657	04/01/99	06/30/99	CBI	(S) Neutralization agent	(G) Sodium alkoxide
P–99–0661	04/01/99	06/30/99	Shell Chemical Company	(S) Paint; other coatings/ industrial applications	(G) High molecular weight epoxy functional nonionic dispersant
P–99–0684	04/02/99	07/01/99	CBI	(G) Additive, open, non-dispersive use	(G) Fluorinated polyurethane
P–99–0685	04/02/99	07/01/99	CBI	(G) Dye	(G) Sodium salt of a triazinyl monoazo dyestuff
P–99–0686	04/05/99	07/04/99	Huntsman Corporation	(S) Curing accelerator in epoxies; viscosity reducer in epoxies and diluents; plasticizer for urethanes; chain extender for coatings; raw material for urethanes w/o phosgene as reactant	(S) 1,3-dioxolan-2-one, 4-(hydroxymethyl)-*
P–99–0687	04/06/99	07/05/99	CBI	(S) For flexible industrial coatings	(G) Flexible acrylic polymer
P–99–0688	04/06/99	07/05/99	CBI	(S) For flexible industrial coatings	(G) Flexible acrylic polymer
P–99–0689	04/06/99	07/05/99	CBI	(S) For flexible industrial coatings	(G) Flexible acrylic polymer
P–99–0690	04/06/99	07/05/99	CBI	(S) For flexible industrial coatings	(G) Flexible acrylic polymer
P–99–0691	04/05/99	07/04/99	CBI	(G) Coating agent	(G) Cyclodecane ester
P–99–0692	04/05/99	07/04/99	CBI	(G) Liquid detergent additive	(G) Modified polyacrylic acid, partial sodium salt
P–99–0693	04/05/99	07/04/99	CBI	(G) Liquid detergent additive	(G) Modified polyacrylic acid, partial sodium salt
P–99–0694	04/06/99	07/05/99	CBI	(G) Lubricant	(G) Neopentyl polyols, mixed esters with caroboxylic acids
P–99–0695	04/05/99	07/04/99	CBI	(G) Additives for plastics	(G) Polyester
P–99–0696	04/06/99	07/05/99	S. C. Johnson & Son, Inc.	(G) Open, non-dispersive use	(G) Aliphatic, aromatic polyol
P–99–0697	04/06/99	07/05/99	S. C. Johnson & Son, Inc.	(G) Open, non-dispersive use	(G) Aliphatic, aromatic polyol
P–99–0698	04/06/99	07/05/99	S. C. Johnson & Son, Inc.	(G) Open, non-dispersive use	(G) Aliphatic, aromatic polyol
P–99–0699	04/06/99	07/05/99	S. C. Johnson & Son, Inc.	(G) Open, non-dispersive use	(G) Aliphatic, aromatic polyol
P–99–0700	04/06/99	07/05/99	S. C. Johnson & Son, Inc.	(G) Open, non-dispersive use	(G) Aliphatic, aromatic polyol
P–99–0701	04/06/99	07/05/99	S. C. Johnson & Son, Inc.	(G) Open, non-dispersive use	(G) Aliphatic, aromatic polyol
P–99–0702	04/06/99	07/05/99	CBI	(G) Packing	(G) Acrylate copolymer
P–99–0703	04/06/99	07/05/99	CBI	(S) Coating	(G) Oil modified waterborne polyurethane
P–99–0704	04/06/99	07/05/99	CBI	(G) Packing	(G) Acrylate copolymer

I. 82 Premanufacture Notices Received From: 04/01/99 to 04/30/99—Continued

Case No.	Received Date	Projected Notice End Date	Manufacturer/Importer	Use	Chemical
P–99–0705	04/06/99	07/05/99	CIBA Specialty Chemicals Div./Colors Div.	(S) Reactive dye for cellulose, scarlet; reactive dye for cellulose, black	(G) Naphthalenesulfonic acid, -amino-hydroxy-, coupled with diazotized 2-[(aminophenyl)sulfonyl]ethyl hydrogen sulfate and diazotized amino-[[2-(sulfoox-y)ethyl]sulfonyl]benzenesulfonic acid, potassium sodium salts
P–99–0706	04/07/99	07/06/99	CBI	(S) Intermediate	(G) Alkoxy chlorosilane ester
P–99–0707	04/07/99	07/06/99	3M Company	(G) Coating for film	(G) Silicone polymer
P–99–0708	04/07/99	07/06/99	The Dow Chemical Company	(G) Epoxy resin additive; epoxy resin adhesive coating; exopy resin film adhesive	(G) Epoxy-isocyanate co-polymer
P–99–0709	04/06/99	07/05/99	CBI	(G) Component of coating with open use	(G) Water dispersible polyester
P–99–0710	04/06/99	07/05/99	CBI	(G) Component of coating with open use	(G) Water dispersible polyester
P–99–0711	04/06/99	07/05/99	CBI	(G) Component of coating with open use	(G) Water dispersible polyester
P–99–0712	04/06/99	07/05/99	CBI	(G) Component of coating with open use	(G) Water dispersible polyester
P–99–0713	04/06/99	07/05/99	CBI	(G) Component of coating with open use	(G) Water dispersible polyester
P–99–0714	04/06/99	07/05/99	CBI	(G) Component of coating with open use	(G) Water dispersible polyester
P–99–0715	04/09/99	07/08/99	Wacker Silicones Corp.	(S) Crosslinking agent for papercoating	(G) Branched hydrogen-functional polydimethysiloxane
P–99–0716	04/08/99	07/07/99	S C Johnson & Company	(G) Open, non-dispersive use	(G) Acrylic emulsion polymer
P–99–0717	04/08/99	07/07/99	CBI	(G) Additive, open, non-dispersive use	(G) Polyester modified polydimethylsiloxane, hydroxy functional
P–99–0718	04/09/99	07/08/99	Bedoukian Research, Inc.	(S) Agricultural pheromone for use as sole active ingredient in monitoring traps. 40 CFR 152.10(b). (not a pesticide); agricultural pheromone for use as sole active ingredient in traps to achieve pest control 40 CFR 152.25(b)(4).	(S) 5-nonanol, 4-methyl-*
P–99–0719	04/13/99	07/12/99	CBI	(S) Wood finishes & parquet laquers	(G) Copolymer of acrylic acrylates, methacrylates and acid
P–99–0720	04/13/99	07/12/99	Creanova Inc.	(S) Reactive hot melt for automobile industry	(G) Polyester of aromatic and aliphatic carboxylic acids with alkane diols.
P–99–0721	04/12/99	07/11/99	CBI	(G) Polyurethane moisture cure adhesive	(G) Polyurethane prepolymer
P–99–0722	04/12/99	07/11/99	Zeon Chemicals L.P.	(S) Pressure sensitive adhesives; hot melt adhesives; rubber compounds; road markings	(S) Cyclopentene, polymer with 1-butene, (2e)-2-butene, (2z)-2-butene, 2-methyl-1-propene and 1,3-pentadiene*
P–99–0723	04/12/99	07/11/99	Dystar L. P.	(S) Basic dye for dyeing cationic dyeable polyester fibers	(G) Phenoxazin-5-ium, 3-substituted-7-substituted, salt
P–99–0724	04/12/99	07/11/99	CBI	(G) Material for lithography	(G) Polymer of hydroxybenzaldehyde and crezol etc.
P–99–0725	04/12/99	07/11/99	Shell Chemical Company	(S) Paint other coating/industrial apps.	(G) Polymeric alkyl amine adduct for curing epoxy resins
P–99–0726	04/15/99	07/14/99	Arch Chemicals, Inc.	(S) Captive chemical intermediate for photoresist	(G) Naphthoquinone diazide sulfonate ester
P–99–0727	04/15/99	07/14/99	CBI	(S) Laminating adhesive	(G) Aromatic polyurethane
P–99–0728	04/15/99	07/14/99	CBI	(S) Laminating adhesive	(G) Aromatic polyester polyurethane
P–99–0729	04/15/99	07/14/99	CBI	(G) Dye	(G) Sodium salt of substituted nickel phthalocyanine derivative
P–99–0730	04/15/99	07/14/99	CBI	(G) Solvent; heat transfer agent	(G) Octafluorotetrahydrofuran and related chemicals
P–99–0731	04/16/99	07/15/99	CBI	(G) Copy toner industry chemical	(G) Aluminate, bis[[(substituted)azo][hydroxyphenylbenzenesulfonamidato]hydrogen compound with tetramethylpiperidinamine

I. 82 Premanufacture Notices Received From: 04/01/99 to 04/30/99—Continued

Case No.	Received Date	Projected Notice End Date	Manufacturer/Importer	Use	Chemical
P–99–0732	04/16/99	07/15/99	CIBA Specialty Chemicals Corporation	(S) A dye for engineering plastics; a dye for pes fibers; a dye for waxes, candles, and mineral oils	(G) Benzofuranone, [alkylsubstituted]-2-substituted-benzofuranylidene-[alkylsubstituted]
P–99–0733	04/21/99	07/20/99	Ashland Inc.	(G) Adhesive	(G) Modified isocyanate
P–99–0734	04/21/99	07/20/99	CBI	(S) Friction modifier and lubricity additive in industrial and automotive lubricants	(G) 9-octadecenoic acid, 12-hydroxy-, [*r*-(*z*)]-, ester with aliphatic alcohol
P–99–0735	04/21/99	07/20/99	CBI	(S) Friction modifier and lubricity additive in industrial and automotive lubricants	(G) 9-octadecenoic acid, 12-hydroxy-, [*r*-(*z*)]-, ester with aliphatic alcohol
P–99–0736	04/21/99	07/20/99	CBI	(S) Friction modifier and lubricity additive in industrial and automotive lubricants	(G) 9-octadecenoic acid, 12-hydroxy-, [*r*-(*z*)]-, ester with aliphatic alcohol
P–99–0737	04/19/99	07/18/99	CBI	(G) Cleaning additive	(G) Acrylic polymer
P–99–0738	04/21/99	07/20/99	CBI	(G) Component of coating with open use	(G) Acrylic copolymer
P–99–0739	04/21/99	07/20/99	CBI	(G) Component of coating with open use	(G) Acrylic copolymer
P–99–0740	04/21/99	07/20/99	CBI	(G) Component of coating with open use	(G) Acrylic copolymer
P–99–0741	04/21/99	07/20/99	CBI	(G) Component of coating with open use	(G) Acrylic copolymer
P–99–0742	04/21/99	07/20/99	CBI	(G) Component of coating with open use	(G) Acrylic copolymer
P–99–0743	04/21/99	07/20/99	CBI	(G) Component of coating with open use	(G) Acrylic copolymer
P–99–0744	04/19/99	07/18/99	CIBA Specialty Chemicals Div./Colors Div.	(G) Textile dye	(G) 2,7-naphthalenedisulfonic acid, 3-amino-4–[[4–[[4–[[2–[2-(substituted)ethoxy]ethyl]amino]-6-fluoro-1,3,5-triazin-2-yl]amino]-2-sulfophenyl]azo]-5-hydroxy-, trisodium salt
P–99–0745	04/19/99	07/18/99	Cytec Industries Inc.	(S) Catalyst in preparation of specialty olefins	(S) Phosphine, tricyclopenyl*
P–99–0746	04/19/99	07/18/99	CBI	(G) Suface size paper additive; water resistant starch	(G) Amylopectin, alkenyl, butanedioate, sodium salt
P–99–0747	04/19/99	07/18/99	CBI	(G) Suface size paper additive; water resistant starch	(G) Amylopectin, alkenyl, butanedioate, calcium salt
P–99–0748	04/19/99	07/18/99	CBI	(G) Suface size paper additive; water resistant starch	(G) Starch, alkenyl, butanedioate, sodium salt
P–99–0749	04/19/99	07/18/99	CBI	(G) Suface size paper additive; water resistant starch	(G) Starch, alkenyl, butanedioate, calcium salt
P–99–0750	04/21/99	07/20/99	CBI	(G) Coating binder	(G) Acrylic polymer
P–99–0751	04/22/99	07/21/99	CBI	(G)	(G) Polyester tetrafunctional acrylate
P–99–0752	04/19/99	07/18/99	CBI	(G) Colorant	(G) Sulfonated copper phthalocyanine, substituted with aromatic sulfonamid, sodium salt
P–99–0753	04/22/99	07/21/99	Eastman Kodak Company	(G) Contained use in imaging products	(G) Substituted heterocyclic pyrazole carboxylic acid salt
P–99–0754	04/22/99	07/21/99	Cytec Industries Inc.	(G) Catalyst	(S) 9-phosphabicyclo[3.3.1]nonane, 9,9′-(1,2-ethanediyl)bis- (9ci)*
P–99–0755	04/23/99	07/22/99	Far Research, Inc	(G) Chemical intermediate, polymer additive	(G) Alkyne
P–99–0756	04/23/99	07/22/99	CBI	(G) Open non-dispersive (coating material)	(G) Aqueous polyurethane dispersion
P–99–0757	04/26/99	07/25/99	CBI	(S) Road paving material	(S) Asphalt, reaction products with butadiene-styrene polymer*
P–99–0758	04/22/99	07/21/99	CBI	(G) Open destructive use as a gas generant for automotive inflators	(G) Gas generant
P–99–0759	04/27/99	07/26/99	CBI	(G) Non-reactive additive, vehicle, dilulent, and functional liquid for multiple purposes - contained; open, non-dispersive; and dispersive uses	(G) Modified polyether (generic chemical name for both substance)
P–99–0760	04/27/99	07/26/99	CBI	(G) Non-reactive additive, vehicle, dilulent, and functional liquid for multiple purposes - contained; open, non-dispersive; and dispersive uses	(G) Modified polyether (generic chemical name for both substance)

I. 82 Premanufacture Notices Received From: 04/01/99 to 04/30/99—Continued

Case No.	Received Date	Projected Notice End Date	Manufacturer/Importer	Use	Chemical
P–99–0761	04/28/99	07/27/99	CBI	(S) Phosphoric acid clean-up enzyme immobilization metals removal in electroplating and automotive industries	(G) 4, phosphoric methyl styrene and divinylbenzene polymer

In table II, EPA provides the following information (to the extent that such information is not claimed as CBI) on the Notices of Commencement to manufacture received:

II. 27 Notices of Commencement From: 04/01/99 to 04/30/99

Case No.	Received Date	Commencement/Import Date	Chemical
P–95–0110	04/13/99	03/09/99	(G) Substituted pyrimidine
P–96–1641	04/12/99	04/05/99	(G) Trisubstituted naphthylene sulfonic acid salt
P–97–1000	04/06/99	03/26/99	(G) Polycycloamide
P–98–0254	04/06/99	03/19/99	(G) Trisubstituted aliphatic aldehyde
P–98–0462	04/05/99	03/24/99	(G) Alkoxylated alkynol
P–98–0539	04/12/99	04/05/99	(G) Naphthalenedisulfonic acid, 2-[substituted]-5-hydroxy-6-[substituted]phenyl]azo]-salt*
P–98–0550	04/01/99	03/18/99	(G) 2-propenoic acid, polymer with vinyl monomer, sodium salt, disodium disulfite and peroxydisulfuric acid ([(ho)s(o)2]2o2) diammonium salt initiated
P–98–0651	04/06/99	03/26/99	(G) Siloxyacrylate polymer
P–98–0806	04/06/99	03/22/99	(G) Isocyanate-functionalized polyurethane polymer
P–98–1028	04/02/99	03/08/99	(G) Cyclic peroxy ketone
P–98–1152	04/01/99	03/15/99	(S) 2-propene-1-aminium, *n,n*-dimethyl-*n*-2-propenyl-, chloride, polymer with 2-propenamide and *n,n,n*-trimethyl-2-[(1-oxo-2-propenyl)oxy]ethanaminium chloride*
P–98–1213	04/13/99	03/31/99	(G) Epoxidized polyol
P–99–0019	04/15/99	03/26/99	(G) Benzenesulfonic acid, diamino-3–[[4–2-sulfooxyethyl]sulfonyl]phenyl]azo]-5–4–[[2-(sulfooxy)ethyl]sulfonyl]-sulfonylphenyl]azo]-, sodium salt
P–99–0075	04/16/99	03/29/99	(G) Modified polyethyleneimine
P–99–0083	04/08/99	03/29/99	(G) Ammonium salt of an acidic polymer
P–99–0126	04/12/99	04/01/99	(G) Silicone polymer
P–99–0128	04/01/99	03/04/99	(G) Alkyl ammonium salt of a high-molecular weight carboxylic acid
P–99–0133	04/13/99	03/31/99	(G) Hot melt polyurethane adhesive
P–99–0162	04/12/99	03/24/99	(G) Alkyl-crosslinked polymethylsiloxane
P–99–0186	04/05/99	03/29/99	(G) Polyester polyurethane methacrylic graft copolymer
P–99–0205	04/01/99	03/10/99	(G) Alkyd resin
P–99–0220	04/15/99	03/31/99	(G) Propietary carboxylated styrene/acrylated polymer
P–99–0222	04/06/99	03/26/99	(G) Polyester-polyether acrylate
P–99–0223	04/06/99	03/26/99	(G) Polyester acrylate
P–99–0248	04/15/99	03/24/99	(G) Polyurethane laminating adhesive
P–99–0253	04/14/99	03/24/99	(G) Acrylic polymer
P–99–0327	04/06/99	03/22/99	(G) Aliphatic acid salt

List of Subjects

Environmental protection, Premanufacture notices.

Dated: June 2, 1999.

Oscar Morales,

Acting Director, Information Management Division, Office of Pollution Prevention and Toxics.

[FR Doc. 99–15008 Filed 6-11-99; 8:45 am]

BILLING CODE 6560–50–F

ENVIRONMENTAL PROTECTION AGENCY

[OPPTS–51927; FRL–6077–1]

Certain New Chemicals; Receipt and Status Information

AGENCY: Environmental Protection Agency (EPA).

ACTION: Notice.

SUMMARY: Section 5 of the Toxic Substances Control Act (TSCA) requires any person who intends to manufacture (defined by statute to include import) a new chemical (i.e., a chemical not on the TSCA Inventory) to notify EPA and comply with the statutory provisions pertaining to the manufacture of new chemicals. Under sections 5(d)(2) and 5(d)(3) of TSCA, EPA is required to publish a notice of receipt of a premanufacture notice (PMN) or an application for a test marketing exemption (TME), and to publish periodic status reports on the chemicals under review and the receipt of notices of commencement to manufacture those chemicals. This status report, which covers the period from March 22, to March 31, 1999, consists of the PMNs

and TMEs, both pending or expired, and the notices of commencement to manufacture a new chemical that the Agency has received under TSCA section 5 during this time period.

FOR FURTHER INFORMATION CONTACT: Christine Augustyniak, Associate Director, Environmental Assistance Division (7408), Office of Pollution Prevention and Toxics, Environmental Protection Agency, 401 M St., S.W., Washington, DC 20460; telephone numbers: 202–554–1404 and TDD: 202–554–0551; e-mail address: TSCA-Hotline@epa.gov.

SUPPLEMENTARY INFORMATION:

I. Does this Action Apply to Me?

This action is directed to the public in general. As such, the Agency has not attempted to describe the specific entities that this action may apply to. Although others may be affected, this action applies directly to the submitter of the premanufacture notices addressed in the action. If you have any questions regarding the applicability of this action to a particular entity, consult the person listed in the ''FOR FURTHER INFORMATION CONTACT'' section.

II. How Can I Get Additional Information, Including Copies of this Document and Other Related Documents?

A. *Electronically*. You may obtain copies of this document and certain other available documents from the EPA Internet Home Page at http://www.epa.gov/. On the Home Page select ''Laws and Regulations'' and then look up the entry for this document under the ''Federal Register - Environmental Documents.'' You can also go directly to the ''Federal Register'' listings at http://www.epa.gov/fedrgstr/.

B. *In person*. The Agency has established an official record for this action under docket control number OPPTS–51927. The official record consists of the documents specifically referenced in this action, any public comments received during an applicable comment period, and other information related to this action, including any information claimed as confidential business information (CBI). This official record includes the documents that are physically located in the docket, as well as the documents that are referenced in those documents. The public version of the official record does not include any information claimed as CBI. The public version of the official record, which includes printed, paper versions of any electronic comments submitted during an applicable comment period, is available for inspection in the TSCA Nonconfidential Information Center, North East Rm. B-607, Waterside Mall, 401 M St., SW., Washington, DC. The Center is open from 12 noon to 4 p.m., Monday through Friday, excluding legal holidays. The telephone number of the Center is 202–260–7099.

C. *By phone*. If you need additional information about this action, you may also contact the person identified in the ''FOR FURTHER INFORMATION CONTACT '' section.

III. Why is EPA taking this Action?

Section 5 of TSCA requires any person who intends to manufacture (defined by statute to include import) a new chemical (i.e., a chemical not on the TSCA Inventory) to notify EPA and comply with the statutory provisions pertaining to the manufacture of new chemicals. Under sections 5(d)(2) and 5(d)(3) of TSCA, EPA is required to publish a notice of receipt of a PMN or an application for a TME, and to publish periodic status reports on the chemicals under review and the receipt of notices of commencement to manufacture those chemicals. This status report, which covers the period from March 22, to March 31, 1999, consists of the PMNs and TMEs, both pending or expired, and the notices of commencement to manufacture a new chemical that the Agency has received under TSCA section 5 during this time period.

IV. Receipt and Status Report for PMNs and TMEs

This status report identifies the PMNs and TMEs, both pending or expired, and the notices of commencement to manufacture a new chemical that the Agency has received under TSCA section 5 during this time period. If you are interested in information that is not included in the following tables, you may contact EPA as described in Unit II above to access additional non-CBI information that may be available.

In table I, EPA provides the following information (to the extent that such information is not claimed as CBI) on the PMNs received by EPA during this period: the EPA case number assigned to the PMN; the date the PMN was received by EPA; the projected end date for EPA's review of the PMN; the submitting manufacturer; the potential uses identified by the manufacturer in the PMN; and the chemical identity.

I. 55 Premanufacture Notices Received From: 03/22/99 to 03/31/99

Case No.	Received Date	Projected Notice End Date	Manufacturer/Importer	Use	Chemical
P–99–0615	03/22/99	06/20/99	CBI	(G) Thermosetting resins	(G) Allyl ester oligomer; allyl ester resin
P–99–0616	03/23/99	06/21/99	CBI	(G) Cleaning agent	(G) Fatty alcohol alkoxylate
P–99–0618	03/22/99	06/20/99	CBI	(G) Processing aid	(G) Polyamine chloride salt
P–99–0619	03/23/99	06/21/99	Daicolor-Pope, Inc.	(G) The new substance is used as an additive in manufacturing water base paints and inks	(G) Water-reducible methacryl-styrene copolymer
P–99–0620	03/23/99	06/21/99	Daicolor-Pope, Inc.	(G) The new substance is used as an additive in manufacturing water base paints and inks	(G) Water-reducible acrylic-styrene copolymer
P–99–0621	03/24/99	06/22/99	H. B. Fuller Company	(G) Adhesion Promotor for Automobile windshield Adhesives	(G) Isocyanate-functionalized prepolymer
P–99–0622	03/25/99	06/23/99	CIBA Specialty Chemicals Corp. - Colors Div.	(G) Textile dye	(G) Propanenitrile, 3-[[4-[[-dichloro-2-benzothiazoly-l]azo]phenyl]ethylamino]-
P–99–0632	03/25/99	06/23/99	H. B. Fuller Company	(S) Adhesive for automobile windshield; volumes are total of all pmn substance	(G) Isocyanate-functionalized prepolymer
P–99–0633	03/25/99	06/23/99	H. B. Fuller Company	(S) Adhesive for automobile windshield; volumes are total of all pmn substance	(G) Isocyanate-functionalized prepolymer

I. 55 Premanufacture Notices Received From: 03/22/99 to 03/31/99—Continued

Case No.	Received Date	Projected Notice End Date	Manufacturer/Importer	Use	Chemical
P–99–0634	03/25/99	06/23/99	H. B. Fuller Company	(S) Adhesive for automobile windshield; volumes are total of all pmn substance	(G) Isocyanate-functionalized prepolymer
P–99–0635	03/25/99	06/23/99	H. B. Fuller Company	(S) Adhesive for automobile windshield; volumes are total of all pmn substance	(G) Isocyanate-functionalized prepolymer
P–99–0636	03/24/99	06/20/99	CBI	(G) Filler/flame retardant	(G) Functionalized magnesium hydroxide
P–99–0637	03/24/99	06/20/99	CBI	(G) Filler/flame retardant	(G) Functionalized magnesium hydroxide
P–99–0638	03/25/99	06/23/99	CIBA Specialty Chemicals Corp. - Colors Div.	(G) Textile dye	(G) Alanine, *N*-[5-(acetylamino)-4-[(2-chloro-6-cyano-4-nitrophenyl)azo]-2-methoxyphenyl]-*N*-(substituted alkoxy)-, methyl ester
P–99–0639	03/30/99	06/28/99	CBI	(S) Cationic dye for coloring of leather	(G) Chlorohydroxy substituted amine reaction products with leuco sulphur dye
P–99–0640	03/29/99	06/27/99	Goldschmidt Chemical Corp.	(G) Resin coating	(G) Organomodified polysiloxane resin
P–99–0641	03/29/99	06/27/99	Goldschmidt Chemical Corp.	(G) Polymer intermediate	(G) Hydroxyalkylmodified polysiloxane
P–99–0642	03/29/99	06/27/99	Goldschmidt Chemical Corp.	(G) Resin coating	(G) Organomodified polysiloxane resin
P–99–0643	03/29/99	06/27/99	Goldschmidt Chemical Corp.	(G) Defoamer	(G) Polyether modified polysiloxane
P–99–0644	03/29/99	06/27/99	CBI	(G) Automotive interior parts	(G) Polyester polyurethane polymer
P–99–0645	03/30/99	06/28/99	Shell Chemical Company	(S) Surfactant	(G) Amidoamine modified polyethylene glycol
P–99–0646	03/29/99	06/27/99	CBI	(G) Synthetic industrial lubricant for contained use	(G) Pentaerythritol, mixed esters with fatty acids, c8–9, branched.
P–99–0647	03/31/99	06/29/99	RAHN USA Corporation	(S) Uv/eb inks; uv/eb coatings; uv/eb adhesives; uv/eb fillers	(G) Polyester acrylate
P–99–0648	03/29/99	06/27/99	E. I. Dupont De Nemours & Company, Inc.	(G) Polymer intermediate	(G) Ethylene terpolymer
P–99–0649	03/29/99	06/27/99	E. I. Dupont De Nemours & Company, Inc.	(G) Polymer intermediate	(G) Ethylene terpolymer
P–99–0650	03/31/99	06/29/99	Goldschmidt Chemical Corp.	(G) Resin coating	(G) Organomodified polysiloxane resin
P–99–0652	03/24/99	06/20/99	CBI	(G) Filler/flame retardant	(G) Functionalized aluminum hydroxide
P–99–0653	03/24/99	06/20/99	CBI	(G) Filler/flame retardant	(G) Functionalized aluminum hydroxide
P–99–0654	03/30/99	06/28/99	CBI	(G) Open, non-dispersive (intermediate)	(G) Thiocarbonate
P–99–0656	03/30/99	06/28/99	CBI	(G) Additive, open, non-dispersive use	(G) Fluorinated polyurethane, modified with acrylate groups
P–99–0658	03/30/99	06/28/99	CBI	(G) Open, non-dispersive (intermediate)	(G) Isothiocyanate
P–99–0659	03/26/99	06/24/99	CBI	(G) Coagulant	(G) *N,N,N*-trimethyl-2-[(2-methyl-1-oxo-2-propenyl)oxy] ethanium chloride, copolymer with cationic monomer
P–99–0660	03/30/99	06/28/99	Goldschmidt Chemical Corp.	(G) Release coating agent	(G) Acrylmodified polysiloxane
P–99–0662	03/30/99	06/28/99	CBI	(G) Resin coating	(S) Rosin, fumarated, polymer with acrylic acid, bisphenol a, diethylene glycol, epichlorohydrin, pentaerythritol and 1,2,3-propanetriyl tris [12-(oxiranylmethyoxy)-9-octadecenoate]*
P–99–0663	03/26/99	06/24/99	CBI	(S) Protective colloid for aqueous latex adhesives; protective colloid for aqueous lates paints; protective colliod for architectural coatings	(S) Poly(oxy-1,2-ethanediyl), α-hydro-omega-hydroxy-, polymer with 1,3-bis(1-isocyanato-1-methylethyl)benzene*

I. 55 Premanufacture Notices Received From: 03/22/99 to 03/31/99—Continued

Case No.	Received Date	Projected Notice End Date	Manufacturer/Importer	Use	Chemical
P–99–0664	03/26/99	06/24/99	CBI	(S) Protective colloid for aqueous latex adhesives; protective colloid for aqueous lates paints; protective colliod for architectural coatings	(S) 1,3-propanediol, 2-ethyl-2-(hydroxymethyl)-, polymer with 1,3-bis(1-isocyanato-1-methylethyl)benzene and α-hydro-omega-hydroxypoly (oxy-1,2-ethanediyl)*
P–99–0665	03/30/99	06/28/99	Goldschmidt Chemical Corp.	(G) Resin coating	(G) Organomodified polysiloxane resin
P–99–0666	03/30/99	06/28/99	CBI	(G) Open, non-dispersive (intermediate)	(G) Sulfonyl urea
P–99–0667	03/30/99	06/28/99	CBI	(G) Open, non-dispersive (intermediate)	(G) Triazolinone
P–99–0668	03/30/99	06/28/99	CBI	(G) Open, non-dispersive (reactant)	(G) Substituted sulfonyl isocyanate
P–99–0669	03/30/99	06/28/99	Goldschmidt Chemical Corp.	(G) Wetting agent	(G) Alcohol alkoxylated
P–99–0670	03/29/99	06/27/99	E. I. Dupont De Nemours & Co, Inc.	(G) Polymer modifier	(G) Ethylene interpolymer
P–99–0671	03/29/99	06/27/99	E. I. Dupont De Nemours & Co, Inc.	(G) Polymer modifier	(G) Ethylene interpolymer
P–99–0672	03/29/99	06/27/99	E. I. Dupont De Nemours & Co, Inc.	(G) Polymer modifier	(G) Ethylene interpolymer
P–99–0673	03/29/99	06/27/99	E. I. Dupont De Nemours & Co, Inc.	(G) Polymer modifier	(G) Ethylene interpolymer
P–99–0674	03/29/99	06/27/99	E. I. Dupont De Nemours & Co, Inc.	(G) Polymer modifier	(G) Ethylene interpolymer
P–99–0675	03/29/99	06/27/99	E. I. Dupont De Nemours & Company, Inc.	(G) Polymer modifier	(G) Ethylene interpolymer
P–99–0676	03/29/99	06/27/99	E. I. Dupont De Nemours & Company, Inc.	(G) Polymer modifier	(G) Ethylene interpolymer
P–99–0677	03/29/99	06/27/99	E. I. Dupont De Nemours & Company, Inc.	(G) Polymer modifier	(G) Ethylene interpolymer
P–99–0678	03/29/99	06/27/99	E. I. Dupont De Nemours & Company, Inc.	(G) Polymer modifier	(G) Ethylene interpolymer
P–99–0679	03/29/99	06/27/99	E. I. Dupont De Nemours & Company, Inc.	(G) Polymer modifier	(G) Ethylene interpolymer
P–99–0680	03/30/99	06/27/99	CBI	(G) Resin coating	(S) 1,3-isobenzofurandione, polymer with (chloromethyl)oxirane and 4,4•-(1-methylethylidene)bis[phenol], ester with 2-oxepanone homopolymer 2-[(1-oxo-2-propenyl)oxy)ethyl ester*
P–99–0681	03/30/99	06/28/99	Shell Chemical Company	(S) Surfactant	(G) Carboxylated polyethylene glycol
P–99–0682	03/26/99	06/24/99	Allied Signal Inc.	(S) Foam blowing agent; refrigerant for commercial chillers solvent	(S) 1,1,1,3,3-pentafluoropropane*
P–99–0683	03/30/99	06/28/99	CBI	(G) Open, non-dispersive (intermediate)	(G) Triazolinone

In table II, EPA provides the following information (to the extent that such information is not claimed as CBI) on the TMEs received:

II. 1 Test Marketing Exemption Notice Received From: 03/22/99 to 03/31/99

Case No.	Received Date	Projected Notice End Date	Manufacturer/Importer	Use	Chemical
T–99–0002	03/25/99	05/06/99	Ilford imaging	(S) Dye for aqueous inkjet ink for commercial printer	(S) 1,5-naphthalenesulfonic acid, 3–[[4–[[4,6-bis[(2-sulfoethyl)amino]-1,3,5-triazin-2-yl]amino]-2,5-dimethoxyphenyl]azo]-, tetrasodium salt*

In table III, EPA provides the following information (to the extent that such information is not claimed as CBI) on the Notices of Commencement to manufacture received:

III. 22 Notice of Commencement From: 03/22/99 to 03/31/99

Case No.	Received Date	Commencement/ Import Date	Chemical
P–92–0199	03/30/99	03/02/99	(G) Polyurethane polyol
P–95–1956	03/23/99	03/01/99	(G) Oil free isophthalic polyester
P–96–0756	03/30/99	03/17/99	(G) 1-piperidinecarboxylic acid, 2-[(dichloro-hydroxy-carbomonocycle)hydrazono]-,methyl ester
P–96–1623	03/22/99	03/02/99	(G) Quaternary ammonium chloride
P–97–0560	03/22/99	02/24/99	(G) Quaternary ammonium chloride intermediate
P–97–0620	03/29/99	03/25/99	(G) Isocyanate-terminate polyether polyester polymer
P–97–0995	03/29/99	03/23/99	(G) Polybutadiene diacrylate
P–98–0388	03/25/99	03/10/99	(G) Polyester polyol
P–98–0550	04/01/99	03/18/99	(G) 2-propenoic acid, polymer with vinyl monomer, sodium salt, disodium disulfite and peroxydisulfuric acid ([(ho)s(o)2]2o2) diammonium salt initiated
P–98–0757	03/29/99	03/23/99	(G) Polyphenylene
P–99–0020	03/30/99	03/10/99	(G) Modified polymeric succinimide disperant
P–99–0030	03/30/99	03/11/99	(G) Modified polymeric succinimide dispersant
P–99–0076	03/29/99	01/23/99	(G) Acrylic polymer
P–99–0084	03/25/99	03/16/99	(G) Aryl phosphoryl chloride
P–99–0106	03/25/99	03/19/99	(G) Polycarbonate resin
P–99–0128	04/01/99	03/04/99	(G) Alkyl ammonium salt of a high-molecular weight carboxylic acid
P–99–0152	03/30/99	03/16/99	(G) Thermoplastic polyurethane resin
P–99–0154	03/23/99	02/25/99	(G) Aryl phosphonic acid salt
P–99–0174	03/25/99	03/19/99	(G) Methyl propyl ether
P–99–0176	03/29/99	03/16/99	(G) Fatty acid modified acrylate
P–99–0205	04/01/99	03/10/99	(G) Alkyd resin
P–99–0259	03/23/99	03/16/99	(G) Cycloaliphatic amine adducts

Environmental protection, Premanufacture notices.

Dated: June 2, 1999,

Oscar Morales,

Acting Director, Information Management Division, Office of Pollution Prevention and Toxics.

[FR Doc. 99–15009 Filed 6-11-99; 8:45 am]

BILLING CODE 6560–50–F

FEDERAL COMMUNICATIONS COMMISSION

Notice of Public Information Collection(s) Being Reviewed by the Federal Communications Commission

June 4, 1999.

SUMMARY: The Federal Communications Commission, as part of its continuing effort to reduce paperwork burden invites the general public and other Federal agencies to take this opportunity to comment on the following information collection, as required by the Paperwork Reduction Act of 1995, Public Law 104–13. An agency may not conduct or sponsor a collection of information unless it displays a currently valid control number. No person shall be subject to any penalty for failing to comply with a collection of information subject to the Paperwork Reduction Act (PRA) that does not display a valid control number. Comments are requested concerning (a) whether the proposed collection of information is necessary for the proper performance of the functions of the Commission, including whether the information shall have practical utility; (b) the accuracy of the Commission's burden estimate; (c) ways to enhance the quality, utility, and clarity of the information collected; and (d) ways to minimize the burden of the collection of information on the respondents, including the use of automated collection techniques or other forms of information technology.

DATES: Written comments should be submitted on or before August 13, 1999. If you anticipate that you will be submitting comments, but find it difficult to do so within the period of time allowed by this notice, you should advise the contact listed below as soon as possible.

ADDRESSES: Direct all comments to Les Smith, Federal Communications Commissions, 445 12th Street, S.W., Room 1-A804, Washington, DC 20554 or via the Internet to lesmith@fcc.gov.

FOR FURTHER INFORMATION CONTACT: For additional information or copies of the information collections contact Les Smith at (202) 418–0217 or via the Internet at lesmith@fcc.gov.

SUPPLEMENTARY INFORMATION:

OMB Control Number: 3060–0714

Title: Antenna Registration Number Required as Supplement to Application Forms.

Form Number: Not applicable.

Type of Review: Extension of a currently approved collection.

Respondents: Individuals or households; Businesses or other for-profit; State, Local or Tribal Government; Not-for-profit institutions; Farms; Federal Government.

Number of Respondents: 516,000.

Estimated Time Per Response: 5 minutes

Frequency of Response: Reporting, on occasion.

Total Annual Burden: 43,344 hours.

Needs and Uses: Effective July 1, 1996, the current antenna clearance procedures were replaced with a uniform registration procedure that applied to antenna structure owners. Structure owners receive an Antenna Structure Registration Number which is a unique number that identifies an antenna structure. Once obtained, this number must be used on all filings related to the antenna structure. The Commission requires this Registration Number to be submitted with any of the applications for licensing.

This clearance was required in order to allow time for the Commission to update it's application forms to include collection of Antenna Structure

Registration Number. While we have accomplished this task, we continue to accept older versions of the forms with the registration number as an attachment, merely as a customer convenience until radio services are fully implemented in ULS.

There is no change to the number of respondents or total annual burden and there are no additional costs to respondents.

Federal Communications Commission.

Magalie Roman Salas,

Secretary.

[FR Doc. 99–14929 Filed 6–11–99; 8:45 am]

BILLING CODE 67120–01–P

FEDERAL COMMUNICATIONS COMMISSION

Public Information Collections Being Reviewed by the Federal Communications Commission

June 8, 1999.

SUMMARY: The Federal Communications Commission, as part of its continuing effort to reduce paperwork burden invites the general public and other Federal agencies to take this opportunity to comment on the following information collection, as required by the Paperwork Reduction Act of 1995, Public Law 104–13. An agency may not conduct or sponsor a collection of information unless it displays a currently valid control number. No person shall be subject to any penalty for failing to comply with a collection of information subject to the Paperwork Reduction Act (PRA) that does not display a valid control number. Comments are requested concerning (a) whether the proposed collection of information is necessary for the proper performance of the functions of the Commission, including whether the information shall have practical utility; (b) the accuracy of the Commission's burden estimate; (c) ways to enhance the quality, utility, and clarity of the information collected; and (d) ways to minimize the burden of the collection of information on the respondents, including the use of automated collection techniques or other forms of information technology.

DATES: Written comments should be submitted on or before August 13, 1999. If you anticipate that you will be submitting comments, but find it difficult to do so within the period of time allowed by this notice, you should advise the contact listed below as soon as possible.

ADDRESSES: Direct all comments to Les Smith, Federal Communications Commission, 445 12th Street, SW., Room 1–A804, Washington, DC 20554 or via the Internet to lesmith@fcc.gov.

FOR FURTHER INFORMATION CONTACT: For additional information or copies of the information collections contact Les Smith at (202) 418–0217 or via the Internet at lesmith@fcc.gov.

SUPPLEMENTARY INFORMATION:

OMB Control Number: 3060–0436.

Title: Equipment Authorization—Cordless Telephone Security Coding.

Form Number: N/A.

Type of Review: Extension of currently approved collection.

Respondents: Businesses or other for-profit entities.

Number of Respondents: 200.

Estimated time per response: 1 hour.

Total Annual Burden: 200 hours.

Total Annual Cost: $2,800.

Needs and Uses: Cordless telephone security features protect the public switched telephone network from unintentional line seizure and telephone dialing. These features prevent unauthorized access to the telephone line, the dialing of calls in response to signals other than those from the owner's handset and the unintentional ringing of a cordless telephone handset. Use of the cordless telephone security features reduces the harm caused by some cordless telephones to the ''911'' Emergency Service Telephone System and the telephone network in general.

OMB Control Number: 3060–0387.

Title: On-Site Verificaton of Field Disturbance Sensors—Section 15.201(d).

Form Number: N/A.

Type of Review: Extension of currently approved collection.

Respondents: Businesses or other for-profit entities.

Number of Respondents: 200.

Estimated time per response: 18 hours.

Total Annual Burden: 3,600 hours.

Total Annual Cost: $40,000.

Needs and Uses: Commission rules permit the operation of field disturbance sensors in the low VHF region of the spectrum. In order to monitor non-licensed field disturbance sensors operating in the low VHF television bands, a unique procedure for on-site equipment testing of the systems is required to ensure suitable safeguards for the operation of these devices. Data is retained by the holder of the equipement authorized issued by the Commssion and made available only at the request of the Commission.

Federal Communications Commission.

Magalie Roman Salas,

Secretary.

[FR Doc. 99–14980 Filed 6–11–99; 8:45 am]

BILLING CODE 6712–01–P

FEDERAL COMMUNICATIONS COMMISSION

Public Information Collection(s) Being Reviewed by the Federal Communications Commission for Extension Under Delegated Authority; Comments Requested

June 4, 1999.

SUMMARY: The Federal Communications Commission, as part of its continuing effort to reduce paperwork burden invites the general public and other Federal agencies to take this opportunity to comment on the following information collection(s), as required by the Paperwork Reduction Act of 1995, Public Law 104–13. An agency may not conduct or sponsor a collection of information unless it displays a currently valid control number. No person shall be subject to any penalty for failing to comply with a collection of information subject to the Paperwork Reduction Act (PRA) that does not display a valid control number. Comments are requested concerning (a) whether the proposed collection of information is necessary for the proper performance of the functions of the Commission, including whether the information shall have practical utility; (b) the accuracy of the Commission's burden estimate; (c) ways to enhance the quality, utility, and clarity of the information collected; and (d) ways to minimize the burden of the collection of information on the respondents, including the use of automated collection techniques or other forms of information technology.

DATES: Written comments should be submitted on or before August 13, 1999. If you anticipate that you will be submitting comments, but find it difficult to do so within the period of time allowed by this notice, you should advise the contact listed below as soon as possible.

ADDRESSES: Direct all comments to Les Smith, Federal Communications Commission, Room 1 A–804, 445 Twelfth Street, SW., Washington, DC 20554 or via the Internet to lesmith@fcc.gov.

FOR FURTHER INFORMATION CONTACT: For additional information or copies of the information collections contact Les Smith at (202) 418–0217 or via the Internet at lesmith@fcc.gov.

SUPPLEMENTARY INFORMATION:

OMB Control Number: 3060–0326.

Title: Section 73.69 Antenna Monitors.

Form Number: None.

Type of Review: Extension of currently approved collection.

Respondents: Business or other for-profit.

Number of Respondents: 20 AM Licensees.

Estimated Time Per Response: 1 hour per 73.69(d)(1); 2 hours per 73.69(d)(5).

Frequency of Response: On occasion.

Total Annual Burden: 30.

Total Annual Costs: None.

Needs and Uses: Section 73.69(c) requires AM station licensees with directional antennas to file an informal request to operate without required monitors with the Mass Media Bureau in Washington, DC, when conditions beyond the control of the licensee prevent the restoration of an antenna monitor to service within a 120 day period. Section 73.69(d)(1) requires that AM licensees with directional antennas request and obtain temporary authority to operate with parameters at variance with licensed values when an authorized antenna monitor is replaced pending issuance of a modified license specifying new parameters. Section 73.69(d)(5) requires AM licensees with directional antennas to submit an informal request for modification of license to the FCC within 30 days of the date of antenna monitor replacement. Station licensees must operate in accordance with station licenses. The data collected by Section 73.69(c) is used by the FCC Engineer to grant continued approval to operate without the required monitors. The data collected by Section 73.69(d)(1) is used by FCC staff to grant interim authority to licensees to operate in variance of the station license. The data collected by Section 73.69(d)(5) is used by FCC staff to issue a modified license.

Federal Communications Commission.

Magalie Roman Salas,

Secretary.

[FR Doc. 99–14981 Filed 6–11–99; 8:45 am]

BILLING CODE 6712–01–P

FEDERAL RESERVE SYSTEM

Change in Bank Control Notices; Acquisitions of Shares of Banks or Bank Holding Companies

The notificants listed below have applied under the Change in Bank Control Act (12 U.S.C. 1817(j)) and § 225.41 of the Board's Regulation Y (12 CFR 225.41) to acquire a bank or bank holding company. The factors that are considered in acting on the notices are set forth in paragraph 7 of the Act (12 U.S.C. 1817(j)(7)).

The notices are available for immediate inspection at the Federal Reserve Bank indicated. The notices also will be available for inspection at the offices of the Board of Governors. Interested persons may express their views in writing to the Reserve Bank indicated for that notice or to the offices of the Board of Governors. Comments must be received not later than June 28, 1999.

A. Federal Reserve Bank of Minneapolis (JoAnne F. Lewellen, Assistant Vice President) 90 Hennepin Avenue, P.O. Box 291, Minneapolis, Minnesota 55480-0291:

1. Marlene Ensrud, McVille, North Dakota, and Alfred and Virginia Haugen, McVille, North Dakota; to acquire voting shares of McVille Financial Services, Inc., McVille, North Dakota, and thereby indirectly acquire voting shares of McVille State Bank, McVille, North Dakota.

Board of Governors of the Federal Reserve System, June 8, 1999.

Robert deV. Frierson,

Associate Secretary of the Board.

[FR Doc. 99–14961 Filed 6-11-99; 8:45 am]

BILLING CODE 6210-01-F

FEDERAL RESERVE SYSTEM

Formations of, Acquisitions by, and Mergers of Bank Holding Companies

The companies listed in this notice have applied to the Board for approval, pursuant to the Bank Holding Company Act of 1956 (12 U.S.C. 1841 *et seq.*) (BHC Act), Regulation Y (12 CFR Part 225), and all other applicable statutes and regulations to become a bank holding company and/or to acquire the assets or the ownership of, control of, or the power to vote shares of a bank or bank holding company and all of the banks and nonbanking companies owned by the bank holding company, including the companies listed below.

The applications listed below, as well as other related filings required by the Board, are available for immediate inspection at the Federal Reserve Bank indicated. The application also will be available for inspection at the offices of the Board of Governors. Interested persons may express their views in writing on the standards enumerated in the BHC Act (12 U.S.C. 1842(c)). If the proposal also involves the acquisition of a nonbanking company, the review also includes whether the acquisition of the nonbanking company complies with the standards in section 4 of the BHC Act. Unless otherwise noted, nonbanking activities will be conducted throughout the United States.

Unless otherwise noted, comments regarding each of these applications must be received at the Reserve Bank indicated or the offices of the Board of Governors not later than July 8, 1999.

A. Federal Reserve Bank of Cleveland (Paul Kaboth, Banking Supervisor) 1455 East Sixth Street, Cleveland, Ohio 44101-2566:

1. Third Street Bancshares, Inc., Marietta, Ohio; to become a bank holding company by acquiring 100 percent of the voting shares of Settlers Bank, Marietta, Ohio.

B. Federal Reserve Bank of Richmond (A. Linwood Gill III, Assistant Vice President) 701 East Byrd Street, Richmond, Virginia 23261-4528:

1. First Union Corporation, Charlotte, North Carolina; to acquire shares of United Bankshares, Inc., Philadelphia, Pennsylvania, and thereby indirectly acquire United Bank of Philadelphia, Philadelphia, Pennsylvania.

C. Federal Reserve Bank of Atlanta (Lois Berthaume, Vice President) 104 Marietta Street, N.W., Atlanta, Georgia 30303-2713:

1. Premier Bancshares, Inc., Atlanta, Georgia; to merge with North Fulton Bancshares, Inc., Roswell, Georgia, and thereby indirectly acquire Milton National Bank, Roswell, Georgia.

Board of Governors of the Federal Reserve System, June 8, 1999.

Robert deV. Frierson,

Associate Secretary of the Board.

[FR Doc. 99–14962 Filed 6-11-99; 8:45 am]

BILLING CODE 6210-01-F

DEPARTMENT OF HEALTH AND HUMAN SERVICES

Centers for Disease Control and Prevention

[30DAY–14–99]

Agency Forms Undergoing Paperwork Reduction Act Review

The Centers for Disease Control and Prevention (CDC) publishes a list of information collection requests under review by the Office of Management and Budget (OMB) in compliance with the Paperwork Reduction Act (44 U.S.C. Chapter 35). To request a copy of these requests, call the CDC Reports Clearance Officer at (404) 639–7090. Send written comments to CDC, Desk Officer; Human Resources and Housing Branch, New Executive Office Building, Room 10235; Washington, DC 20503. Written comments should be received within 30 days of this notice.

Proposed Projects

1. Health Assessment of Persian Gulf War Veterans From Iowa: Follow-up on Asthma (0920–0425)—Revision—

National Center for Environmental Health (NCEH). The purpose of this proposed study is to collect additional data to validate health outcomes reported by participants in the Health Assessment of Persian Gulf War Veterans From Iowa. The original data collection consisted of a telephone survey of 3,695 military personnel who served during the time of the Persian Gulf War and listed Iowa as their home of residence. Data will be collected from subjects who participated in the telephone survey to validate the self-report of asthma. Lung function assessment, tests of airways hyperactivity, and standard respiratory health questionnaires will be administered. Review of medical records, standard physical examination, and laboratory evaluation will be conducted to validate multi systemic conditions, including chronic fatigue syndrome and fibromyalgia. The total annual burden hours are 1,394.

Respondents	Nunber of respondents	Number of responses/respondent	Average burden/response (in hrs)
Introductory Call	264	1	0.1666
Scheduling of Appointment	150	1	0.0833
Travel To and From Iowa	150	1	3
Consent Procedures	150	1	0.1666
Medical Questionnaire	150	1	0.25
Occupational and Exposure History	150	1	0.25
Mental Health and Social Support History	150	1	1.583
American Thoracic Society Questionnaire	150	1	0.1666
Iowa Persian Gulf Study Questions (Selected questions on Asthma)	150	1	1.583
Iowa Persian Gulf Study Questions (Selected questions on health related quality of life—SF36)	150	1	0.1666
Physical Examination	150	1	0.50
Lung Functioning Testing	150	1	1.25

Dated: June 8, 1999.

Charles Gollmar,

Acting Associate Director for Policy, Planning and Evaluation, Centers for Disease Control and Prevention (CDC).

[FR Doc. 99–14965 Filed 6–11–99; 8:45 am]

BILLING CODE 4163–18–P

DEPARTMENT OF HEALTH AND HUMAN SERVICES

Centers for Disease Control and Prevention

Advisory Committee for Energy-Related Epidemiologic Research: Conference Call Meeting

In accordance with section 10(a)(2) of the Federal Advisory Committee Act (Pub. L. 92–463), the Centers for Disease Control and Prevention (CDC) announces the following conference call meeting.

Name: Advisory Committee for Energy-Related Epidemiologic Research (ACERER).

Time and Date: 4 p.m.–5 p.m. EDT, June 28, 1999.

Place: The conference call will originate from the National Center for Environmental Health (NCEH), CDC, in Atlanta, Georgia. Please see ''Supplementary Information'' for details on accessing the conference call.

Status: Open to the public, limited only by the availability of telephone ports.

Purpose: This committee is charged with providing advice and recommendations to the Secretary, Health and Human Services (HHS); the Assistant Secretary for Health, HHS; the Director, CDC; and the Administrator, Agency for Toxic Substances and Disease Registry, on establishment of a research agenda and the conduct of a research program pertaining to energy-related analytic epidemiologic studies.

Background: ACERER's history began with a 1991 Memorandum of Understanding (MOU), which transferred epidemiologic studies from the Department of Energy (DOE) to HHS. Two related advisory committees were created: the Environmental Safety and Health Advisory Committee at DOE, which was later terminated, and the ACERER at HHS. Upon completion of the transferred studies, funding was available to expand the research program. In 1996, the MOU's scope was broadened to address general public health issues rather than the initial focus on analytic epidemiologic research.

Matters to be Discussed: The conference call agenda is to consolidate ACERER recommended revisions to the current (MOU) between HHS and DOE.

Agenda items are subject to change as priorities dictate.

Supplementary Information: This conference call is scheduled to begin at 4 p.m., EDT. To participate in the conference call, please dial 1–888–422–7105 and enter conference code 690104. You will then be automatically connected to the call.

This notice is being published less than 15 days prior to the meeting due to the difficulty of coordinating the attendance of members because of conflicting schedules.

Contact Person for More Information: Michael J. Sage, Executive Secretary, ACERER, and Deputy Director, Division of Environmental Hazards and Health Effects, NCEH, CDC, 4770 Buford Highway, NE, (F–28), Atlanta, Georgia 30341–3724, telephone 770/488–7040, fax 770/488–7044.

The Director, Management Analysis and Services Office has been delegated the authority to sign Federal Register notices pertaining to announcements of meetings and other committee management activities for both the CDC and ATSDR.

Dated: June 7, 1999.

Carolyn J. Russell,

Director, Management Analysis and Services Office, Centers for Disease Control and Prevention (CDC).

[FR Doc. 99–15081 Filed 6–11–99; 8:45 am]

BILLING CODE 4163–18–P

DEPARTMENT OF HEALTH AND HUMAN SERVICES

Administration for Children and Families

Submission of OMB Review; Comment Request

Title: National Survey of Child and Adolescent Well-Being (NSCAW).

OMB No.: New.

Description: Title V, Section 429A, in the amendments to Title IV–B of the Social Security Act authorizes the Secretary of Health and Human Services to conduct a national random sample study of child welfare. The NSCAW fulfills the intent of that legislation, and responds to a growing need for better understanding of the child welfare system and the children and families who come into contact with it. The survey will collect data through interviews and assessments with a national sample of 6,700 children along with their parents, caregivers (such as foster parents), teachers, and caseworkers and other agency personnel to assess the characteristics of children and families who come into contact with the child welfare system, the services they need and receive, and the

outcomes for those children and families. Information will be collected from all respondents at the time the child enters the child welfare system, with three subsequent annual follow-ups. In addition, some information will be collected from parents or caregivers and caseworkers midway between the annual collections. The information will provide national estimates on characteristics of children and families in the child welfare system, and will be used to guide child welfare policy and practice, as well as to provide new insights into the antecedents and consequences of child maltreatment.

Respondents: State, Local or Tribal Government.

ANNUAL BURDEN ESTIMATES

Instrument	Number of respondents	Number of responses per respondent	Average burden hours per response	Total burden hours
NSCAW	19,339	2	.914	35,350

Estimate Total Annual Burden Hours: 35,350.

Additional Information

Copies of the proposed collection may be obtained by writing to the Administration for Children and Families, Office of Information Services, 370 L'Enfant Promenade, SW, Washington, DC 20447, Attn: ACF Reports Clearance Officer.

OMB Comment

OMB is required to make a decision concerning the collection of information between 30 to 60 days after publication of this document in the **Federal Register**. Therefore, a comment is best assured of having its full effect if OMB receives it within 30 days of publication. Written comments and recommendations for the proposed information collection should be sent directly to the following: Office of Management and Budget, Paperwork Reduction Project, 725 17th Street, NW, Washington, DC 20503, Attn: ACF Desk Officer.

Dated: June 8, 1999.

Bob Sargis,

Acting Reports Clearance Officer.

[FR Doc. 99–14956 Filed 6–11–99; 8:45 am]

BILLING CODE 4184–01–M

DEPARTMENT OF HEALTH AND HUMAN SERVICES

Substance Abuse and Mental Health Services Administration

Meeting; SAMHSA Special Emphasis Panel II

Pursuant to Public Law 92–463, notice is hereby given of the following meeting of the SAMHSA Special Emphasis Panel II in June.

A summary of the meeting may be obtained from: Ms. Coral M. Sweeney, SAMHSA, Division of Extramural Activities Policy and Review, 5600 Fishers Lane, Room 17–89, Rockville, Maryland 20857. Telephone: (301) 443–2998.

Substantive program information may be obtained from the individual named as Contact for the meeting listed below.

The meeting will include the review, discussion and evaluation of individual contract proposals. These discussions could reveal personal information concerning individuals associated with the proposals and confidential and financial information about an individual's proposal. The discussion may also reveal information about procurement activities exempt from disclosure by statute and trade secrets and commercial or financial information obtained from a person and privileged and confidential. Accordingly, the meeting is concerned with matters exempt from mandatory disclosure in Title 5 U.S.C. 552b(c) (3), (4), and (6) and 5 U.S.C. App. 2, § 10(d).

Committee Date: SAMHSA Special Emphasis Panel II.

Meeting Date: June 17–18, 1999.

Place: Bethesda Marriott 5151 Pooks Hill Road, Bethesda, Maryland 20814.

Closed: June 17, 1999, 8:30 a.m.–5:00 p.m.; June 18, 1999, 8:30 a.m.–Adjournment.

Contact: Ferdinand Hui, Room 17–89, Parklawn Building, Telephone: (301) 443–9919 and FAX (301) 443–1587.

This notice is being published less than 15 days prior to the meeting due to the urgent need to meet timing limitations imposed by the review and funding cycle.

Dated: June 1, 1999.

Coral Sweeney,

Lead Grants Technical Assistant, Extramural Activities Team, Substance Abuse and Mental Health Services Administration.

[FR Doc. 99–15005 Filed 6–11–99; 8:45 am]

BILLING CODE 4162–20–P

DEPARTMENT OF HEALTH AND HUMAN SERVICES

Substance Abuse and Mental Health Services Administration

Meetings, SAMHSA Special Emphasis Panel I

Pursuant to Public Law 92–463, notice is hereby given of the following meeting of the SAMHSA Special Emphasis Panel I in July 1999.

A summary of the meetings and a roster of the members may be obtained from: Ms. Coral Sweeney, SAMHSA, Office of Policy and Program Coordination, Division of Extramural Activities, Policy, and Review, 5600 Fishers Lane, Room 17–89, Rockville, Maryland 20857. Telephone: 301–443–2998.

Substantive program information may be obtained from the individual named as Contact for the meeting listed below.

The meetings will include the review, discussion and evaluation of individual grant applications. These discussions could reveal personal information concerning individuals associated with the applications. Accordingly, these meetings are concerned with matters exempt from mandatory disclosure in Title 5 U.S.C. 552b(c)(6) and 5 U.S.C. App.2, Section 10(d).

Committee Name: SAMHSA Special Emphasis Panel I (SEP I).

Meeting Dates: July 7, 1999.

Place: Bethesda Marriott, 5151 Pooks Hill Road, Bethesda, MD 20814.

Closed: July 7, 1999, 8:30 a.m.–adjournment.

Panel: Adolescent Treatment Models TI 99–001.

Contact: Danielle Johnson, Room 17–89, Parklawn Building, Telephone: 301–443–2683 and FAX: 301–443–3437

Committee Name: SAMHSA Special Emphasis Panel I (SEP I).

Meeting Dates: July 12–14, 1999.

Place: Bethesda Marriott, 5151 Pooks Hill Road, Bethesda, MD 20814.

Closed: July 12–13, 1999, 8:30 a.m.–5:00 p.m.; July 14, 1999, 8:30 a.m.–adjournment.

Panel: Community Action Grants TI 99–003.

Contact: Peggy Riccio, Room 17–89, Parklawn Building, Telephone: 301–443–9996 and FAX: 301–443–3437.

Committee Name: SAMHSA Special Emphasis Panel I (SEP I).
Meeting Dates: July 16, 1999.
Place: Bethesda Marriott, 5151 Pooks Hill Road, Bethesda, MD 20814.
Closed: July 16, 1999, 8:30 a.m.–adjournment.
Panel: Coal Miners Supplement SM 99–010.
Contact: Ferdinand Hui, Room 17–89, Parklawn Building, Telephone: 301–443–9919 and FAX: 301–443–3437.

Committee Name: SAMHSA Special Emphasis Panel I (SEP I).
Meeting Dates: July 19–22, 1999.
Place: Bethesda Marriott, 5151 Pooks Hill Road, Bethesda, MD 20814.
Closed: July 19–21, 1999, 8:30 a.m.–5:00 p.m.; July 22, 1999, 8:30 a.m.–adjournment.
Panel: HIV/AIDS Outreach Program TI 99–005.
Contact:
Michael J. Koscinski, Room 17–89, Parklawn Building, Telephone: 301–443–6094 and FAX: 301–443–3437 and
Brian Richmond, Room 17–89, Parklawn Building, Telephone: 301–443–6133 and FAX: 301–443–3437

Committee Name: SAMHSA Special Emphasis Panel I (SEP I).
Meeting Dates: July 19–22, 1999.
Place: Bethesda Marriott, 5151 Pooks Hill Road, Bethesda, MD 20814.
Closed: July 19–21, 1999, 8:30 a.m.–5:00 p.m.; July 22, 1999, 8:30 a.m.–adjournment.
Panel: Community Treatment Programs PA 99–050.
Contact:
Danielle Johnson, Room 17–89, Parklawn Building, Telephone: 301–443–2683 and FAX: 301–443–3437 and
Stan Kusnetz, Room 17–89, Parklawn Building, Telephone: 301–443–3042 and FAX: 301–443–3437

Committee Name: SAMHSA Special Emphasis Panel I (SEP I).
Meeting Dates: July 19–22, 1999.
Place: Bethesda Marriott, 5151 Pooks Hill Road, Bethesda, MD 20814.
Closed: July 19–21, 1999, 8:30 a.m.–5:00 p.m.; July 22, 1999, 8:30 a.m.–adjournment.
Panel: School Action Grants SM 99–009.
Contact:
Boris Aponte, Room 17–89, Parklawn Building, Telephone: 301–443–2290 and FAX: 301–443–3437 and
Allen Smith, Room 17–89, Parklawn Building, Telephone: 301–443–7025 and FAX: 301–443–3437.

Committee Name: SAMHSA Special Emphasis Panel I (SEP I).
Meeting Dates: July 26–30, 1999.
Place: Bethesda Marriott, 5151 Pooks Hill Road, Bethesda, MD 20814.
Closed: July 26–29, 1999, 8:30 a.m.–5:00 p.m.; July 30, 1999, 8:30 a.m.–adjournment.
Panel: School Action Grants SM 99–009.
Contact: Peggy Riccio, Room 17–89, Parklawn Building, Telephone: 301–443–9996 and FAX: 301–443–3437.

Committee Name: SAMHSA Special Emphasis Panel I (SEP I).
Meeting Dates: July 26–29, 1999.
Place: Bethesda Marriott, 5151 Pooks Hill Road, Bethesda, MD 20814.
Closed: July 26–28, 1999, 8:30 a.m.–5:00 p.m.; July 29, 1999, 8:30 a.m.–adjournment.
Panel: Targeted Capacity Expansion TI 99–002.
Contact:
Raquel Crider, Ph.D., Room 17–89, Parklawn Building, Telephone: 301–443–5063 and FAX: 301–443–3437 and
Amie Rogal, Room 17–89, Parklawn Building, Telephone: 301–443–8216 and FAX: 301–443–3437 and
Anora Sutherland, Room 17–89, Parklawn Building, Telephone: 301–443–8548 and FAX: 301–443–3437

Dated: June 1, 1999.

Coral Sweeney,

Lead Grants Technical Assistant, Substance Abuse and Mental Health Services Administration.

[FR Doc. 99–15006 Filed 6–11–99; 8:45 am]

BILLING CODE 4162–20–P

DEPARTMENT OF HOUSING AND URBAN DEVELOPMENT

[Docket No. FR–4447–N–02]

Proposed Information Collection: Comment Request; Master Agreement for Servicer's Custodial Account

AGENCY: Office of the President of Government National Mortgage Association (Ginnie Mae), HUD.

ACTION: Notice.

SUMMARY: The proposed information collection requirement described below will be submitted to the Office of Management and Budget (OMB) for review, as required by the Paperwork Reduction Act. The Department is soliciting public comments on the subject proposal.

DATES: Comments due August 13, 1999.

ADDRESSES: Interested persons are invited to submit comments regarding this proposal. Comments should refer to the proposal by name and/or OMB Control Number and should be sent to: Sonya Suarez, Office of Policy, Planning and Risk Management, Department of Housing & Urban Development, 451 7th Street, SW., Room 6226, Washington, DC 20410.

FOR FURTHER INFORMATION CONTACT: Sonya Suarez, Ginnie Mae, (202) 708–2772 (this is not a toll-free number) for copies of the proposed forms and other available documents.

SUPPLEMENTARY INFORMATION: The Department will submit the proposed information collection to OMB for review, as required by the Paperwork Reduction Act of 1995 (44 U.S.C. Chapter 25, as amended).

The Notice is soliciting comments from members of the public and affected agencies concerning the proposed collection of information to: (1) Evaluate whether the proposed collection of information is necessary for the proper performance of the functions of the agency, including whether the information will have practical utility; (2) evaluate the accuracy of the agency's estimate of the burden of the proposed collection of information; (3) enhance the quality, utility, and clarity of the information to be collected; and (4) minimize the burden of the collection of information on those who are to respond, including through the use of appropriate automated collection techniques or other forms of information technology, e.g., permitting electronic submission of responses.

This Notice also lists the following information: *Title of Proposal:* (1) Request for Release of Documents; (2) ACH Debit Authorization; (3) Master Agreement for Servicer's Principal and Interest Custodial Account; (4) Master Agreement for Servicer's Escrow Custodial Account; and (5) Master Custodian Agreement.

OMB Control Number, if applicable: 2503–0017.

Description of the need for the information and proposed use: Form 11708 provides issuers access to the documents held by the document custodian. Forms 11709 and 11720 provide evidence to Ginnie Mae that the issuer has executed an agreement with a document custodian to maintain the principal, interest and escrow funds used to pay securities holders. Form 11709–A provides evidence to Ginnie Mae that the issuer has authorized a Central Paying and Transfer Agent to make Automated Clearing house debits to an issuer's central principal and interest account to disburse Ginnie Mae II payments to securities holders. Form 11715 provides the name of the document custodian institution holding the issuer's documents on behalf of Ginnie Mae.

Agency form numbers, if applicable: HUD forms 11708, 11709, 11709–A, 11715, and 11720.

Members of affected public: For-profit businesses (mortgage companies, thrifts, savings & loans, etc.).

ESTIMATION OF THE TOTAL NUMBER OF HOURS NEEDED TO PREPARE THE INFORMATION COLLECTION INCLUDING NUMBER OF RESPONDENTS, FREQUENCY OF RESPONSE, AND HOURS OF RESPONSE

HUD Forms	Respondents	Frequency of Response	Hours of response *
11708	556	1	9.5
11709	556	1	9.5
11709–A	50	1	1
11715	556	1	9.5
11720	556	1	9.5
Total Hours			39

* Respondents × .017 hours = Hours of Response.

Status of the proposed information collection: Extension of a currently approved collection.

Authority: Section 3506 of the Paperwork Reduction Act of 1995, 44 U.S.C. Chapter 35, as amended.

Dated: June 2, 1999.

George S. Anderson,

Executive Vice President, Ginnie Mae.

[FR Doc. 99–14931 Filed 6–11–99; 8:45 am]

BILLING CODE 4210–01–M

DEPARTMENT OF THE INTERIOR

Office of the Secretary

Relocation of Jeanne d'Arc Statue, Place de France, New Orleans, Louisiana

AGENCY: Office of the Secretary, Interior.

ACTION: Notice—Record of Decision.

SUMMARY: The Mayor of the City of New Orleans, Marc. H. Morial, requested that the Secretary of the Interior approve the relocation of the Place de France, including a statue of Jeanne d'Arc and two bronze cannons, now located between the International Trade Mart Building and the former Rivergate, to a new location in the Vieux Carre (the French Quarter), a National Historic Landmark District. After carefully reviewing the effects of this request, the Secretary of the Interior, pursuant to Section 705 of the Housing and Urban Development Act of 1970, Public Law 91–609 (the Act), approved this request on June 4, 1999.

FOR FURTHER INFORMATION CONTACT: Ms. Geraldine Smith, Superintendent, Jean Lafitte National Historical Park and Preserve, 365 Canal Street, Suite 2400, New Orleans, Louisiana 70130–1142. (504) 589–3882.

SUPPLEMENTARY INFORMATION:

Background

In 1971, the City applied for grant funds to develop the park currently known as the Place de France (and also the Joan of Arc Plaza) under the Act. The Place contains a gilded bronze statue of Jeanne d'Arc and two bronze cannons manufactured during the Napoleonic Empire donated to the City by the French Government. The City constructed the Place de France in 1972 with these grant funds. Section 705 of the Act states, ''[n]o open-space land involving historic or architectural purposes for which assistance has been granted under this title shall be converted to use for any other purpose without the prior approval of the Secretary of the Interior.'' In *Louisiana Landmarks Society, Inc.* v. *City of New Orleans,* No. 94–3880 (E.D. La. 1995), *rev'd on other grounds,* 85 F.3d 1119 (5th Cir. 1996), the Court found that Section 705 applied to the Place de France. Therefore, the approval of the Secretary must be granted prior to change of use of the Place de France.

The question of what regulatory framework must be applied to the request for approval of the Secretary of the relocation was raised by the Louisiana Landmarks Society (letter dated April 17, 1999). No regulations presently exist that implement Section 705 of the Act. In deleting regulations that existed prior to 1982, HUD explained that ''[to] the extent that there are still ongoing projects remaining under these programs, they continue to be governed by the requirements of the enabling legislation under which they were funded since those statutes remain in effect, as well as the obligations under the respective grant and/or loan contracts with HUD.'' 47 FR 1117 (January, 1982), see also, *Louisiana Landmarks Society, Inc.* v. *City of New Orleans, Etc.* Civ. No. 94–3880 (E.D. La 1994), rev. on other grounds *Louisiana Landmarks Society, Inc.* v. *City of New Orleans, Etc.* 85 F.3d 1119 (5th Cir. 1996).

The Louisiana Landmarks Society suggests that the Secretary look to HUD's repealed regulations for guidance on what issues the Secretary must consider, prior to making his decision. However, the repealed regulations did not set forth any standard that the Secretary should follow in making his decision under the Act. Therefore, the repealed regulations provide no guidance to the Secretary.

The Louisiana Landmarks Society suggests, in the alternative, that the Secretary should look to the Land and Water Conservation Act (LWCF) rules on conversion and apply those standards in making his decision. However, the LWCF rules are not applicable in this situation. The LWCF specifically requires the Secretary to consider specific issues prior to making his determination approving or denying a conversion request for conversion of properties funded by that particular program. See, 16 U.S.C. 460l–8(f)(3) (''No property acquired or developed with assistance under this section shall, without the approval of the Secretary, be converted to other than public outdoor recreation uses. The Secretary shall approve such conversion only if he finds it to be in accord with the then existing comprehensive statewide outdoor recreation plan and only upon such conditions as he deems necessary to assure the substitution of other recreation properties of at least equal fair substitution of other recreation properties of at least equal fair market value and of reasonably equivalent usefulness and locations * * *'') However, the Act is a distinct funding statute with a unique statutory framework. Applying the recreational standards of the LWCF to this HUD urban grant program would be inappropriate.

The plain language of the Act grants the Secretary the authority to make his approval decision in his discretion. Further, this decision is informed by compliance with all other applicable laws. Specifically, the Secretary considers the effects of the relocation on the environment, the Vieux Carre Historic District, and the Place itself.

Although the Secretary has noted the local planning process, the Secretary's

decision is not based on an evaluation of the appropriateness of that process or on any other decisions made at the local level, nor does it purport to comply with the mandates or responsibilities of any other federal agency. This decision merely responds to a specific request made by the City, and is made solely in accordance with Section 705 of the Act.

In making this decision, the Secretary considered the effects of the relocation on the environment, the historic district, and the Place itself. Due to construction adjacent to the Place de France, the City, by letter dated October 29, 1998 from Mayor Marc H. Morial, requested that the Secretary approve relocation of the Place, the statue and the cannons from the current location to the Decatur Street/North Peters Street Triangle in the French Quarter.

On February 18, 1999, although not required by law, the Department of the Interior published notice of the request of the City of New Orleans for the Secretary's approval of the proposed relocation for a thirty day public comment period. 64 FR 8110. In response to a request from the public, the Department extended the public comment period by fifteen days through April 6, 1999. 64 FR 14936. Approximately 220 individuals, organizations or public bodies responded. Of these responses, 191 were from individuals who signed or drafted identical petitions.

Summary of Comments Received

Historic Preservation Issues

Several of the commentators raised questions as to the eligibility of the Place, including the Jeanne d'Arc statue, for inclusion on the National Register of Historic Places. To address this concern, the Department made a request to the Keeper of the National Register for a determination of eligibility of the Place, including the Jeanne d'Arc statute, in compliance with the National Historic Preservation Act of 1966, as amended.

On April 12, 1999, the Keeper determined that neither the Place de France, nor the Jeanne d'Arc statue, was eligible for inclusion in the National Register. The Keeper noted that the Place is associated with the special relationship between New Orleans and France, and that the statue itself ''is clearly an important work of art.'' However, neither the relationship, nor the statue met the basic requirements for Register eligibility. The Keeper's decision addresses an issue that was not resolved in the underlying litigation. In *Louisiana Landmarks Society, Inc.* v. *City of New Orleans,* No.94–3880 (E.D. La. 1995), rev'd on other grounds, 85 F.3d 1119 (5th Cir. 1996), the court found only that the property had ''historic purposes'' under the Act.

The Keeper additionally noted that ''the integrity of both the Place de France and the Jeanne d'Arc statue has been compromised by recent changes'' and that the Place de France has been ''seriously impacted by the adjacent construction.''

According to the Mayor, the relocation site for the Place was identified by the staff of the City Planning Commission in consultation with the staff of the City's Arts Council. In selecting this site, the City took into consideration the following seven factors: (1) urban prominence; (2) scale/urban context; (3) visibility as a deterrent to potential vandalism; (4) pedestrian and vehicular safety; (5) suitability for designated functions; (6) stated wishes of identified interest groups; and (7) favorable comparison to the previous installation. In selecting this site, the City consulted with the French community in the City, with Consul General Mme. Lenoir-Bertrand and with Ambassador Francois Bujon de L'Estang. Additionally, the Vieux Carre Commission, with review and approval authority of all architectural and design actions in the Vieux Carre, unanimously approved the proposed relocation site at a public meeting on March 16, 1999.

Because the City's identified relocation site for the Place, including the Jeanne d'Arc statue, was within the Vieux Carre Historic District, the Department evaluated the effect of the relocation on the District. The Department consulted with the Advisory Council on Historic Preservation as required by Section 106 of the National Historic Preservation Act of 1966, as amended, and 36 CFR Part 800. The National Park Service determined that the effect of the project on the District would not be adverse. Both the Louisiana State Historic Preservation Officer (by letter dated April 28, 1999) and the Advisory Council on Historic Preservation (by letter dated May 4, 1999) concurred with this determination.

Environmental Issues

To identify and analyze potential environmental effects of the proposed action, the Department prepared an Environmental Assessment (EA) in accordance with the National Environmental Policy Act. On April 30, 1999, a notice of availability of the EA was published in the **Federal Register**. 64 FR 23354. A notice of the availability of the EA was published in the local New Orleans newspaper, the Times-Picayune, beginning Tuesday, May 4, 1999 and running for three days. And the Department additionally sent notice directly to individuals who provided comments to the Secretary earlier. Interested parties were given the opportunity to submit any comments on the EA for thirty days from publication of availability of the EA. The last day for comments on the Environmental Assessment was June 1, 1999. The National Park Service received less than 10 comments on the EA.

The comments received and considered by the National Park Service included those comments received in response to the **Federal Register** notices of February 18 (the petitioners) and April 28, 1999 (the respondents). These comments or concerns fell into several general categories: (1) Cultural resources; (2) the current Place de France location; (3) the proposed Place de France location; (4) Harrah's Casino; and (5) general comments.

With reference to the cultural resources there was one comment to the April 28 **Federal Register** notice which asked about the status of the current Place de France and the Jeanne d'Arc statue for listing in the National Register. The Keeper of the National Register of Historic Places issued a formal determination that neither the current Place de France nor the statue were eligible for the National Register.

The current Place de France location drew comments from the petitioners and three respondents to the April 28 notice in the **Federal Register**. The petitioners expressed a preference for the current Place de France because of the contributions of Samuel Wilson, a New Orleans architect and preservationist. The Keeper of the National Register said that notwithstanding the importance of Mr. Wilson, properties less than fifty years old, which this property is, must be shown to be exceptionally important to be eligible for listing in the National Register. The Place de France does not meet this test. Three respondents to the April 28 notice opined that the current Place de France is a better location to commemorate international trade and commerce. However, no supporting data was presented to support this position and the National Park Service found this position unpersuasive.

The proposed Place de France generated the most comments. Five respondents to the April 28 notice in the **Federal Register** found the proposed location in the Vieux Carre to be more aesthetically pleasing for display of the statue. One respondent said that there were multiple locations in the Vieux Carre, including the proposed location, that would be preferable to the current

location. Six respondents found the Vieux Carre preferable to commemorate the French heritage of New Orleans. Additionally in a letter prior to the February 18 notice in the **Federal Register** the French Ambassador expressed the same opinion. One respondent was concerned about the possible deleterious effects of air pollution on the statue. The National Park Service has no substantive information indicating that the Vieux Carre location would be more damaging than the current location. It was also noted that New Orleans currently meets all National Ambient Air Quality Standards. Finally, the petitioners and six respondents raised concerns about safety at the proposed location. However, no evidence was presented that suggested that the relocated Place would attract large crowds of visitors, causing significant impacts to the new location. Furthermore, the City has committed to taking appropriate safety measures on those days that large crowds may be anticipated, such as Bastille Day. Thus, the National Park Service found these concerns to be adequately addressed if large crowds of visitors were ever to occur.

Harrah's Casino was also a topic that generated comment by both the petitioners and four respondents. These parties expressed dissatisfaction with the location of the casino and the role it has played in the proposed relocation of the Place de France. The National Park Service properly noted that the role of the casino on decisions of the city of New Orleans is not an issue before the Department of the Interior. Likewise the location of the casino is not a consideration of the Department of the Interior. We do note, however, that the casino has agreed to pay all costs associated with relocation of the Place de France, the statue and cannon to the Vieux Carre.

Finally, there were numerous comments that are difficult to categorize. First, the petitioners and two respondents expressed concern that the current Place de France had already been badly damaged during the demolition of the Rivergate complex. The National Park Service acknowledged the fact that the site was partially demolished when the city of New Orleans attempted to move the statue in 1994 but noted that the cannon and were not damaged. Also the National Park Service pointed out that nothing was damaged that cannot be replaced or redesigned at the Vieux Carre location. Second the petitioners and three respondents challenged the adequacy of the City's rationale to relocate Place de France. The National Park Service correctly pointed out that the only question before the Department of the Interior is the proposed move, not the rationale for the move. Third, there were questions about the regulatory framework under which the Secretary would make a decision on the City's request. The National Park Service's response was similar to the discussion on this same issue provided earlier in this Record of Decision. Lastly, nine respondents asked about reviews and approvals by various local agencies. The National Park Service referenced the respondents to the site selection process employed by the New Orleans Planning Commission and Arts Council and the approval of the Vieux Carre Commission.

The National Park Service issued a Finding of No Significant Impact (FONSI) on the proposed relocation on June 3, 1999, finding that the Secretary's approval of the request of the City does not constitute a major Federal action significantly affecting the human environment.

Dated: June 4, 1999.

Robert J. Lamb,

Acting Assistant Secretary for Policy Management and Budget.

[FR Doc. 99–15018 Filed 6–11–99; 8:45 am]

BILLING CODE 4310–70–P

DEPARTMENT OF THE INTERIOR

Fish and Wildlife Service

Endangered and Threatened Wildlife and Plants; Notice of Intent To Clarify the Role of Habitat in Endangered Species Conservation

AGENCY: Fish and Wildlife Service, Interior.

ACTION: Notice.

SUMMARY: We (the U.S. Fish and Wildlife Service) announce our intent to develop policy or guidance and/or to revise regulations, if necessary, to clarify the role of habitat in endangered species conservation. Identification of the habitat needs of listed species and the conservation of such habitat is the key to recovering endangered and threatened species. We will examine all the tools available to identify and conserve the habitat of listed and threatened species including critical habitat determinations (prudency and determinability) and designations under section 4 of the Endangered Species Act of 1973, as amended (Act). We intend to streamline the processes involved in completing critical habitat determinations and designations. Our goal is to achieve the greatest conservation benefit in the most cost effective manner for imperilled species. We solicit public comments, and we will incorporate comments into the new proposed guidance as appropriate.

DATES: We will accept comments on this guidance until August 13, 1999.

ADDRESSES: Address comments regarding this guidance to the Chief, Division of Endangered Species, U.S. Fish and Wildlife Service, 1849 C Street, N.W., Mailstop ARLSQ–420, Washington, D.C. 20240.

FOR FURTHER INFORMATION CONTACT: Chief, Division of Endangered Species, U.S. Fish and Wildlife Service, 703–358–2171 (see **ADDRESSES** section).

SUPPLEMENTARY INFORMATION:

Background

Importance of Habitat for Species Conservation

The process of habitat protection through the designation of critical habitat is properly examined in the broad context of the importance of habitat in endangered and threatened species conservation. Virtually every study of the conservation of imperilled species considers habitat as a major component in a species' conservation and eventual recovery. The very purpose of the Act is ''to provide a means whereby the ecosystems upon which endangered species depend may be conserved.'' The National Research Council recognized the importance of habitat in its 1995 book, Science and the Endangered Species Act: ''habitat protection is a prerequisite for conservation of biological diversity and protection of endangered and threatened species.'' The National Research Council further noted: ''the Endangered Species Act, in emphasizing habitat, reflects the current scientific understanding of the crucial role that habitat plays for species' (National Research Council 1995).

Habitat considerations are a key part of virtually every process called for in the Act. We describe the habitat needs of species, and threats to habitat, in detail in all listing rules. In fact, Factor A of the ''Summary of Factors Affecting the Species'' section of all proposed and final listing rules discusses ''The Present or Threatened Destruction, Modification, or Curtailment of the Habitat or Range'' of the species. For most species, the threats to habitat are the most important consideration when determining if a species qualifies for protection under the Act. Habitat considerations are prominent in all recovery plans, and recovery plans include maps and descriptions of the

habitat needed to recover the species. The section 7 consultation process addresses the dynamic and seasonal characteristics of the habitat needs of listed species. New information concerning species' habitat use becomes available throughout the listing, consultation, habitat conservation planning, and recovery processes. It is essential that we consider current and complete habitat information in these processes. The analysis of habitat alteration and/or destruction is the cornerstone of the Act's section 7 consultation process and the section 10 habitat conservation planning process; this is true for species that have designated critical habitat, as well as for those species that do not. Habitat is identified, communicated to affected parties, protected, and conserved through all phases of applying the Act's protections. The conservation and recovery of imperilled species is dependent upon habitat protection and restoration. When species are listed as threatened or endangered, the habitats or ecosystems upon which they depend are recognized. Conservation and recovery actions are directed not only to the imperilled species, but to the species' habitat, as well.

Role of Critical Habitat in the Act

Critical habitat is defined in the Act as—(i) the specific areas within the geographical area currently occupied by a species, at the time it is listed in accordance with section 4 of the Act, on which are found those physical or biological features (I) essential to the conservation of the species, and (II) which may require special management considerations or protection, and (ii) specific areas outside the geographical area occupied by a species at the time it is listed upon a determination by the Secretary that such areas are essential for the conservation of the species. Critical habitat, if prudent and determinable, must be proposed and designated by regulation and thus codified in the Code of Federal Regulations (CFR).

A designation of critical habitat is not prudent under the current regulations when one or both of the following situations exist: (i) the species is threatened by taking or other human activity, and identification of critical habitat can be expected to increase the degree of such threat to the species, or (ii) such designation of critical habitat would not be beneficial to the species (50 CFR 424.12(a)(1)). Critical habitat is not determinable when one or both of the following situations exist: (i) information sufficient to perform required analyses of the impacts of the designation is lacking, or (ii) the biological needs of the species are not sufficiently well known to permit identification of an area as critical habitat (50 CFR 424.12(a)(2)).

Once designated, critical habitat has only one regulatory impact: under section 7(a)(2), Federal agencies must, in consultation with the Service, insure that any action they authorize, fund, or carry out is not likely to result in the destruction or adverse modification of critical habitat. As discussed below, section 7(a)(2) likewise prohibits agency actions that are likely to jeopardize the continued existence of any listed species. Section 7(b)–(d) of the Act and 50 CFR part 402 describe in detail the process by which agencies consult with us regarding possible jeopardy to listed species and destruction or adverse modification of critical habitat. According to our interpretation of the regulations, by definition, the adverse modification of critical habitat consultation standard is nearly identical to the jeopardy consultation standard.

Role of Critical Habitat in Actual Practice of Administering and Implementing the Act

While attention to and protection of habitat is paramount to successful conservation actions, we have long believed that, in most circumstances, the designation of ''official'' critical habitat is of little additional value for most listed species, yet it consumes large amounts of conservation resources. Sidle (1987) discussed the practical role of critical habitat designation and posed the question, ''can the jeopardy standard alone adequately protect species?'' Several examples were provided and the conclusion was very clearly stated, ''it is likely that, for listed species endemic to a small area, critical habitat is not often necessary.'' Because there are so many varying opinions, the Service is seeking input on various aspects of critical habitat.

Currently, critical habitat is linked only to the section 7 process and is only enforceable when a Federal nexus (such as Clean Water Act permits, Federal Housing Authority clearances and funding, Environmental Protection Agency authorities, etc.) sufficient to trigger a section 7 consultation exists. Many activities carried out on private, Tribal, State, and Federal lands have Federal involvement, and would be subject to section 7. However, on private land, where no Federal involvement exists, a critical habitat designation has no regulatory impact.

Moreover, we have long believed that separate protection of critical habitat is duplicative for most species. Section 7 prohibits Federal agencies from taking actions that jeopardize the continued existence of a listed species or actions that adversely modify critical habitat. To jeopardize the continued existence of a species is to engage in an action that reasonably would be expected, directly or indirectly, to reduce appreciably the likelihood of both the survival and recovery of a listed species in the wild by reducing the reproduction, numbers, or distribution of species. Destruction or adverse modification is a direct or indirect alteration that appreciably diminishes the value of critical habitat for both the survival and recovery of a listed species. For almost all species, the adverse modification and jeopardy standards are the same., resulting in critical habitat being an expensive regulatory process that duplicates the protection already provided by the jeopardy standard. Sidle (1987) stated, ''Because the ESA can protect species with and without critical habitat designation, critical habitat designation may be redundant to the other consultation requirements of section 7.'' Currently, only 113 species or 9% of the 1179 listed species in the U.S. under the jurisdiction of the Service have designated critical habitat. We address the habitat needs of all 1179 listed species through the conservation mechanisms discussed above, such as listing, section 7 consultation, and the recovery planning process. For most species, the duplication between the jeopardy standard and the adverse modification standard exists because unoccupied habitat is not involved. When unoccupied habitat is designated as critical habitat, the duplication ceases because consultation under section 7 of the Act must then be completed on an area not previously included in the analysis. The Service is interested in your opinion; do the unoccupied habitat aspects of critical habitat designation provide significant conservation benefit for imperilled species?

Procedural and Resource Difficulties in Designating Critical Habitat

We have been inundated with citizen lawsuits for our failure to complete the process described above, and we have been challenged on numerous ''not prudent'' critical habitat determinations (meaning that the designation of critical habitat was determined to be not prudent for that species).

We believe that the present system for determining and designating critical habitat is not working. Many conservation organizations, affected landowners, and industry groups also recognize that the present system is not working. Perception of the value and

purpose of critical habitat varies widely. Many environmental groups view critical habitat as providing additional regulatory protection, hence the large number of lawsuits to prompt critical habitat designations. Some industry groups view critical habitat as the only way economic impacts are addressed in the conservation of imperilled species.

The consequence of the critical habitat litigation activity is that we are utilizing much of our very limited listing program resources in litigation support defending active lawsuits and Notices of Intent (NOIs) to sue relative to critical habitat, and complying with the growing number of adverse court orders. In the meantime, our efforts to respond to listing petitions, to propose listing of critically imperilled species, and to make final listing determinations on existing proposals are being significantly delayed. There are species not yet listed in Regions or geographic locations where litigation support has and will continue to consume much of our funding resources. For example in Hawaii, a single court order remanded 245 ''not prudent'' critical habitat determinations. There are other species in Hawaii that are literally facing extinction while precious resources are being depleted on critical habitat litigation support and the reexaminations of critical habitat prudency determinations for species already listed. Litigation over critical habitat issues for species already listed and receiving the Act's full protection has precluded or delayed many listing actions nationwide.

Economic analysis done for critical habitat designation can be expensive, in the past, total costs for such analyses for critical habitat designations have cost as much as $500,000, against a total listing budget of a few million dollars. The National Research Council's research committee ''recognizes that because of public concern over economic consequences, the designation of critical habitat is often controversial and arduous, delaying or preventing the protection it was intended to afford'' (National Research Council 1995).

An additional costly consequence (both in terms of staff time and funding) of designating critical habitat is where designation triggers compliance with the National Environmental Policy Act (NEPA). The circuit courts are split on the issue of whether critical habitat designation triggers NEPA. Within the jurisdiction of the Court of Appeals for the Tenth Circuit (the states of NM, CO, NE, UT, WY, OK, and KS) NEPA is required (see *Catron County Board of Commissioners* v. *USFWS*, 75 F.3d 1429 (10th Cir. 1996)). The Ninth Circuit does not view the designation of critical habitat as a major Federal action under NEPA (*Douglas County* v. *Babbitt*, 48 F 3d 1495, 1507–08, (9th Cir. 1995), *cert. denied*).

Our Current Policy on Setting Priorities to Maximize Conservation Benefit

Because we do not have unlimited resources, we believe we must set priorities in order to use our funds in the manner most beneficial to imperilled species. In the past we have established priorities for the use of funds through our Listing Priority Guidance (LPG). The FY 1998–1999 Listing Priority Guidance consists of three tiers or categories of listing activities. Emergency listing actions are the highest priority (Tier 1); followed by Tier 2, which comprises final rules, proposed rules, and petition findings; and critical habitat actions constitute Tier 3. This system and its predecessor LPGs have allowed us to manage our listing program for maximum conservation benefit following the FY 1995–1996 moratorium and funding rescission that created large backlogs. When the moratorium was lifted on April 26, 1996, 243 proposed species awaited final determinations. Currently, there are only two proposed species that were included in that very large backlog. Our own system for prioritizing listing actions has enabled us to provide the full protection of the Act to more than 250 species since April 26, 1996. This was possible by foregoing low priority listing actions such as critical habitat designations. Now however, we are being faced with numerous court orders that require us to complete critical habitat designations and reconsider not prudent findings for listed species.

Because of our reducing the listing backlogs, the LPG is evolving. The proposed FY 1999/2000 LPG was published in the **Federal Register** on May 20, 1999. That guidance no longer prioritizes critical habitat actions with other section 4 actions. Critical habitat actions are funded separately (funding still is allocated through the listing subactivity), and critical habitat actions will be prioritized on an annual basis. For example, in FY 1999, 17% of the listing subactivity funds were allocated for critical habitat actions. Court ordered critical habitat actions and Regional priorities received funding for FY 1999 activity. The LPG will continue to evolve as we continue to balance our national listing program.

Proposals for Public Comment

The Service intends to reexamine our existing approach to designation of critical habitat. The legal debate over critical habitat prudency determinations involves two key areas of the ''no net benefit'' argument to attain a not prudent critical habitat determination—(a) the contention that the adverse modification standard for the same species with designated critical habitat is equivalent to the jeopardy standard for species without designated critical habitat; and (b) the treatment of unoccupied habitat in prudency determinations. We particularly solicit comments relative to when the designation of critical habitat will provide additional benefit (beyond that of listing) and what considerations should be included in our prudency determinations.

In order to reduce the costs of accomplishing critical habitat actions, we are considering developing a new streamlined and cost-effective process for critical habitat determinations and designation. As mentioned previously in this notice, the current designation process is inefficient, and should be redesigned to be more cost-effective and in line with the amount of conservation benefit provided to the species. Under the current process designating critical habitat for multiple species could devastate the listing program, and result in scarce funds being spent on activities that have a lower benefit to species relative to other activities .

We believe that describing the areas proposed for designation as critical habitat needs to be a much less labor intensive process. We suggest that suitable habitat is best described in broader terms. We encourage views on whether pinpointing small areas of species occurrence and drawing precise small circles around habitat on maps is the methodology we should be employing to identify and describe critical habitat, or whether instead more general habitat location delineations and broad descriptions of habitat types are the most efficient descriptors to be used in the designation of critical habitat. Very specific lines drawn on a map may not be the most efficient way to identify areas that may be important in the recovery of rare species. We would encourage commentators to discuss better ways to describe habitat and species occurrence. We would suggest that commentators consider how a more descriptive approach might be employed, rather than a map-based approach. Descriptions might be linked to habitat types, elevation, and riparian areas, for example. We would also be interested in comments relating to how the Service could, at the stage of developing a recovery plan, when much more may be known about the needs of

the species than at the time of critical habitat designation, be more specific about the extent of habitat protection necessary for recovery.

We also intend to redesign other aspects of the process for designating critical habitat. We encourage comments on how economic analyses can evolve into a streamlined and cost-effective process. We also solicit comments on how NEPA compliance, when required, may be conducted in a simple and efficient manner. Completing programmatic assessments and analyses, for example, may be an efficiency mechanism. Perhaps multispecies/geographic species groupings to reduce and eliminate administrative redundancy should be more common. We request comments and suggestions relative to how we can effectively streamline the process and specifically whether and how our existing regulations might or should be changed to accomplish this. We also request comments and suggestions on possible legislative corrections that might improve the effectiveness and efficiency of the critical habitat process.

Public Comments Solicited

We intend that any actions resulting from this notice and subsequent proposed guidance be as accurate and as effective as possible. Therefore, we solicit any suggestions from the public, concerned governmental agencies, the scientific community, environmental groups, industry, commercial trade entities, or any other interested party concerning any aspect of this notice. We will take into consideration any comments and additional information received and will announce proposed guidance after the close of the public comment period and as promptly as possible after all comments have been reviewed and analyzed. We will make available for your review and comment any critical habitat guidance, policy, or regulatory changes that are developed.

Executive Order 12866 requires each agency to write regulations/notices that are easy to understand. We invite your comments on how to make this notice easier to understand including answers to questions such as the following: (1) Are the requirements in the notice clearly stated? (2) Does the notice contain technical language or jargon that interferes with the clarity? (3) Does the format of the notice (grouping and order of sections, use of headings, paragraphing, etc.) aid or reduce its clarity? (4) Is the description of the notice in the ''Supplementary Information'' section of the preamble helpful in understanding the notice? What else could we do to make the notice easier to understand?

References Cited

National Research Council. 1995. Science and the Endangered Species Act. National Academy Press, Washington, D.C. 271 pp.

Sidle, J.G. 1987. Critical Habitat Designation: Is it Prudent? Environmental Management 11(4):429–437.

Authority: The authority for this notice is the Endangered Species Act of 1973, as amended, 16 U.S.C. 1531 *et seq.*

Dated: May 3, 1999.

Jamie Rappaport Clark,

Director, U.S. Fish and Wildlife Service.

[FR Doc. 99–15080 Filed 6–11–99; 8:45 am]

BILLING CODE 4310–55–M

DEPARTMENT OF THE INTERIOR

National Park Service

General Management Plan, Environmental Impact Statement, Chiricahua National Monument, Arizona

AGENCY: National Park Service.

ACTION: Notice of intent to prepare an environmental impact statement for the General Management Plan, Chiricahua National Monument.

SUMMARY: Under the provisions of the National Environmental Policy Act, the National Park Service is preparing an environmental impact statement for the General Management Plan for Chiricahua National Monument. This statement will be approved by the Regional Director, Intermountain Region. The plan is needed to guide the protection and preservation of the natural and cultural environments considering a variety of interpretive and recreational visitor experiences that enhance the enjoyment and understanding of the park resources.

The effort will result in a comprehensive general management plan that encompasses preservation of natural and cultural resources, visitor use and interpretation, roads, and facilities. In cooperation with local and national interests, attention will also be given to resources outside the boundaries that affect the integrity of park resources. Alternatives to be considered include no-action, the preferred alternative, and other alternatives addressing the following:

To clearly describe specific resource conditions and visitor experiences in various management units throughout the park and

To identify the kinds of management, use, and development that will be appropriate to achieving and maintaining those conditions.

Ongoing scoping was started with an Environmental Assessment process in 1992. A list of topics considered is available upon request from the park. Comments on this notice must be received by July 10, 1999.

FOR FURTHER INFORMATION CONTACT: Superintendent Alan Cox Chiricahua National Monument, Dos Cabezas Rt., Box 6500 Willcox, AZ 85643–9737 (520) 824–3560.

Dated: June 7, 1999.

Ron Everhart,

Regional Director, Intermountain Region.

[FR Doc. 99–14969 Filed 6–11–99; 8:45 am]

BILLING CODE 4310–70–P

DEPARTMENT OF THE INTERIOR

National Park Service

General Management Plan, Environmental Impact Statement, Fort Bowie National Historic Site, Arizona

AGENCY: National Park Service, Department of the Interior.

ACTION: Notice of intent to prepare an environmental impact statement for the General Management Plan, Fort Bowie National Historic Site.

SUMMARY: Under the provisions of the National Environmental Policy Act, the National Park Service is preparing an environmental impact statement for the General Management Plan for Fort Bowie National Historic Site. This statement will be approved by the Regional Director, Intermountain Region.

The plan is needed to guide the protection and preservation of the natural and cultural environments considering a variety of interpretive and recreational visitor experiences that enhance the enjoyment and understanding of the park resources.

The effort will result in a comprehensive general management plan that encompasses preservation of natural and cultural resources, visitor use and interpretation, roads, and facilities. In cooperation with local and national interests, attention will also be given to resources outside the boundaries that affect the integrity of park resources.

Alternatives to be considered include no-action, the preferred alternative, and other alternatives addressing the following questions:

To clearly describe specific resource conditions and visitor experiences in various management units throughout the park and

To identify the kinds of management, use, and development that will be appropriate to achieving and maintaining those conditions.

Ongoing scoping was started with an Environmental Assessment process in 1992. A list of topics considered is available upon request from the park. Comments on this notice must be received by July 10, 1999.

FOR FURTHER INFORMATION: Contact Superintendent Alan Cox Fort Bowie National Historic Site, Dos Cabezas Rt., Box 6500 Willcox, AZ 85643–9737 (520) 824–3560.

Dated: June 7, 1999.

Ron Everhart,

Regional Director, Intermountain Region.

[FR Doc. 99–14970 Filed 6–11–99; 8:45 am]

BILLING CODE 4310–70–P

DEPARTMENT OF THE INTERIOR

National Park Service

National Register of Historic Places; Notification of Pending Nominations

Nominations for the following properties being considered for listing in the National Register were received by the National Park Service before June 5, 1999.

Pursuant to § 60.13 of 36 CFR Part 60 written comments concerning the significance of these properties under the National Register criteria for evaluation may be forwarded to the National Register, National Park Service, 1849 C St. NW, NC400, Washington, DC 20240. Written comments should be submitted by June 29, 1999.

Carol D. Shull,

Keeper of the National Register.

ALASKA

Fairbanks North Star Borough-Census Area

F.E. Company Dredge No. 2, Fairbanks Creek, Fairbanks vicinity, 99000763

ARKANSAS

Pulaski County

Hopkins—Grace House, 1310 Summit, Little Rock, 99000764

CALIFORNIA

Los Angeles County

Los Altos Apartments, 4121 Wilshire Blvd., Los Angeles, 99000765

COLORADO

Denver County

Rocky Mountain Bank Note Company Building, 1080 Delaware St., Denver, 99000766

FLORIDA

Indian River County

Indian River County Courthouse, 2145 14th Ave., Vero Beach, 99000768

Orange County

Polasek, Albin, House and Studio, 633 Osceola Ave., Winter Park, 99000767

MAINE

Cumberland County

Prince, Cushing and Hannah, House, 189 Greely Rd., Yarmouth vicinity, 99000772

Hancock County

Church of Our Father, ME 3, 0.5 mi. No of Crooked Rd., Hulls Cove, 99000770

Lincoln County

Jefferson Town House, Jct. of ME 126 amd ME 213, Jefferson vicinity, 99000771

York County

Libby's Colonial Tea Room, Jct. of US 1 and Harrisecket Rd., Wells vicinity, 99000769

St. Peter's By-The-Sea Protestant Episcopal Church, 529 Shore Rd., Cape Neddick vicinity, 99000773

Minnesota

Becker County

Graystone Hotel, 119 Pioneer St., Detroit Lakes, 99000774

Montana

Flathead County

Cattle Queen Snowshoe Cabin (Glacier National Park MPS), McDonald Subdistrict, West Glacier vicinity, 99000778

Coal Creek Patrol Cabin (Glacier National Park MPS), US 2, West Glacier vicinity, 99000777

Glacier County

Kootenai Creek Snowshoe Cabin (Glacier National Park MPS), Flattop Mtn., along Kootenai Creek, St. Mary vicinity, 99000775

Sun Camp Fireguard Cabin (Glacier National Park MPS), Going-to-the-Sun Rd., St. Mary vicinity, 99000776

North Carolina

Cumberland County

Fayetteville Downtown Historic District, Roughly along Hay, Person, Green, Gillespie, Bow, Old, W. Russell and Cool Spring Sts., Fayetteville, 99000779

Oregon

Linn County

Aegerter, David and Maggie, Barn (Barns of Linn County, Oregon MPS), 41915 Ridge Dr., Scio vicinity, 99000780

Cochran, William, Barn (Barns of Linn County, Oregon MPS), 28485 Brownsville Rd., Brownsville vicinity, 99000782

Macpherson, Hector and Margaret, Barn (Barns of Linn County, Oregon MPS), 29780 Church Dr., Albany vicinity, 99000781

Milde, Gottlieb and Della, Barn (Barns of Linn County, Oregon MPS), 36898 Northern Dr., Brownsville vicinity, 99000785

Ryan, Michael and Mary, Barn (Barns of Linn County, Oregon MPS), 40363 Huntley Rd., Scio vicinity, 99000784

Smith, James Alexander, and Elmarion, Barn and Lame—Smith House (Barns of Linn County, Oregon MPS), 28020 Powerline Rd., Halsey vicinity, 99000783

Tennessee

Hamilton County

Stone Fort Land Company Historic District, 10th, Newby, E. 11th and Market Sts., Chattanooga, 99000786

West Virginia

Monongalia County

Hackney House, 89 Kingwood St., Morgantown, 99000789

Preston County

Virginia Furnace, WV 26, along Muddy Creek, Albright vicinity, 99000790

Wisconsin

Marathon County

Wright, Duey and Julia, House, 904 Grand Ave., Wausau, 99000787

Rock County

Fulton Street Historic District, Along Fulton St., roughly bounded by Main ans Albion Sts.; 11–21 Swift St., Edgerton, 99000788

[FR Doc. 99–15017 Filed 6–11–99; 8:45 am]

BILLING CODE 4310–70–P

DEPARTMENT OF THE INTERIOR

Bureau of Reclamation

Bay-Delta Advisory Council Meeting

AGENCY: Bureau of Reclamation, Interior.

ACTION: Notice of meeting.

SUMMARY: The Bay-Delta Advisory Council (BDAC) will meet to discuss key issues in addressing CALFED critical issues, focusing on Finance, Governance and Restoration Coordination. There will also be a site tour of the southern California Water Reclamation facilities and a tentatively scheduled evening reception. This meeting is open to the public. Interested persons may make oral statements to the BDAC or may file written statements for consideration.

DATES: The Bay-Delta Advisory Council will tour southern California Water Reclamation facilities on Thursday, July 8, 1999. The tour will run from 1:30 p.m.–5 p.m. leaving from and returning to the Town and Country Resort and Hotel. The evening reception, if held, will be on July 8, 1999 at the Town and Country Resort and Hotel. BDAC will meet from 8:30 a.m.–5 p.m. on Friday,

July 9, 1999 at the Town and Country Resort and Hotel.

ADDRESSES: The Bay-Delta Advisory Council will meet at the Town and Country Resort and Hotel, 500 Hotel Circle North, San Diego, CA 92108 (619) 291–7131.

FOR FURTHER INFORMATION CONTACT: Eugenia Laychak, CALFED Bay-Delta Program, at (916) 654–4214. If reasonable accommodation is needed due to a disability, please contact the Equal Employment Opportunity Office at (916) 653–6952 or TDD (916) 653–6934 at least one week prior to the meeting.

SUPPLEMENTARY INFORMATION: The San Francisco Bay/Sacramento-San Joaquin Delta Estuary (Bay-Delta system) is a critically important part of California's natural environment and economy. In recognition of the serious problems facing the region and the complex resource management decisions that must be made, the state of California and the Federal government are working together to stabilize, protect, restore, and enhance the Bay-Delta system. The State and Federal agencies with management and regulatory responsibilities in the Bay-Delta system are working together as CALFRED to provide policy direction and oversight for the process

One area of Bay-Delta management includes the establishment of a joint State-Federal process to develop long-term solutions to problems in the Bay-Delta system related to fish and wildlife, water supply reliability, natural disasters, and water quality. The intent is to develop a comprehensive and balanced plan which addresses all of the resource problems. This effort, the CALFRED Bay-Delta Program (Program), is being carried out under the policy direction of CALFED. The Program is exploring and developing a long-term solution for a cooperative planning process that will determine the most appropriate strategy and actions necessary to improve water quality, restore health to the Bay-Delta ecosystem, provide for a variety of beneficial uses, and minimize Bay-Delta system vulnerability. A group of citizen advisors representing California's agricultural, environmental, urban, business, fishing, and other interests who have a stake in finding long-term solutions for the problems affecting the Bay-Delta system has been chartered under the Federal Advisory Committee Act (FACA) as the Bay-Delta Advisory Council (BDAC) to advise CALFRED on the program mission, problems to be addressed, and objectives for the Program. BDAC provides a forum to help ensure public participation, and will review reports and other materials prepared by CALFRED staff. BDAC has established a subcommittee called the Ecosystem Roundtable to provide input on annual workplans to implement ecosystem restoration projects and programs.

Minutes of the meeting will be maintained by the Program, Suite 1155, 1416 Ninth Street, Sacramento, CA 95814, and will be available for public inspection during regular business hours, Monday through Friday within 30 days following the meeting.

Dated: June 8, 1999.

Kirk Rodgers,

Acting Regional Director, Mid-Pacific Region.

[FR Doc. 99–14967 Filed 6–11–99; 8:45 am]

BILLING CODE 4310–94–M

DEPARTMENT OF JUSTICE

National Institute of Justice

[OJP (NIJ)–1235]

RIN 1121–ZB68

National Institute of Justice Announcement of the Sixth Meeting of the National Commission on the Future of DNA Evidence

AGENCY: Office of Justice Programs, National Institute of Justice, Justice.

ACTION: Notice of meeting.

SUMMARY: Announcement of the sixth meeting of the National Commission on the Future of DNA Evidence.

SUPPLEMENTARY INFORMATION: The sixth meeting of the National Commission on the Future of DNA Evidence will take place beginning on Sunday, July 25, 1999, 1:00 PM–5:00 PM Eastern Daylight Time and will continue on Monday, July 26, 1999, 9:00 AM–5:00 PM, Eastern Daylight Time. The meeting will take place at the Ritz-Carlton, 15 Arlington Street, Boston, Massachusetts 02117, Phone: 617–536–5700.

The National Commission on the Future of DNA Evidence, established pursuant to Section 3(2)A of the Federal Advisory Committee Act (FACA), 5 U.S.C. App. 2, will meet to carry out its advisory functions under Sections 201–202 of the Omnibus Crime Control and Safe Streets Act of 1968, as amended. This meeting will be open to the public.

FOR FURTHER INFORMATION CONTACT: Christopher H. Asplen, AUSA, Executive Director (202) 616–8123.

Authority

This action is authorized under the Omnibus Crime Control and Safe Streets Act of 1968, §§ 201–03, as amended, 42 U.S.C. 3721–23 (1994).

Background

The purpose of the National Commission on the Future of DNA Evidence is to provide the Attorney General with recommendations on the use of current and future DNA methods, applications and technologies in the operation of the criminal justice system, from the Crime scene to the courtroom. Over the course of its Charter, the Commission will review critical policy issues regarding DNA evidence and provide recommended courses of action to improve its use as a tool of investigation and adjudication in criminal cases.

The Commission will address issues in five specific areas: (1) The use of DNA in postconviction relief cases, (2) legal concerns including *Daubert* challenges and the scope of discovery in DNA cases, (3) criteria for training and technical assistance for criminal justice professionals involved in the identification, collection and preservation of DNA evidence at the crime scene, (4) essential laboratory capabilities in the face of emerging technologies, and (5) the impact of future technological developments in the use of DNA in the criminal justice system. Each topic will be the focus of the in-depth analysis by separate working groups comprised of prominent professionals who will report back to the Commission.

Jeremy Travis,

Director, National Institute of Justice.

[FR Doc. 99–14993 Filed 6–11–99; 8:45 am]

BILLING CODE 4410–18–P

DEPARTMENT OF LABOR

Bureau of International Labor Affairs

International Child Labor Program; Solicitation for Grant Application: Develop and Publicize Factual Information About Child Labor, Its Use and Solutions to the Problem of Child Labor Worldwide

AGENCY: Bureau of International Labor Affairs (ILAB) International Child Labor Program.

ACTION: Notice.

SUMMARY: The purpose of this SGA is to award grants to one or more private, nonprofit organizations for the purpose of developing and publicizing factual information about the use of child labor, creating innovative partnerships to address child labor, and organizing a public dialogue about best-practice

solutions to the problem of child labor worldwide. The grant or grants will be administered by the International Child Labor Program (ICLP) of the Bureau of International Labor Affairs (ILAB).

DATES: The closing date for receipt of a completed application in response to the SGA will be no later than 4:45 p.m. on July 15, 1999.

FOR COMPLETE APPLICATION SEND WRITTEN REQUEST TO: Lisa Harvey, Department of Labor, Procurement Services Center, Room N–5416, 200 Constitution Avenue, NW, Washington, DC 20210, Telephone Number (202) 219–9335.

Signed at Washington, DC this 8th day of June, 1999.

Lawrence J. Kuss,

Grant Officer.

[FR Doc. 99–14963 Filed 6–11–99; 8:45 am]

BILLING CODE 4510–28–M

DEPARTMENT OF LABOR

Employment and Training Administration

Proposed Information Collection Request Submitted for Public Comment and Recommendations; Unemployment Insurance Benefit Accuracy Measurement Program

ACTION: Notice.

SUMMARY: The Department of Labor, as part of its continuing effort to reduce paperwork and respondent burden, conducts a preclearance consultation program to provide the general public and Federal agencies with an opportunity to comment on proposed and/or continuing collections of information in accordance with the Paperwork Reduction Act of 1995 (44 U.S.C. 3506(c)(2)(A)). This program helps to ensure that requested data can be provided in the desired format; reporting burden (time and financial resources) is minimized; collection instruments are clearly understood; and the impact of collection requirements on respondents can be properly assessed. This notice by the Employment and Training Administration is to solicit comments concerning the proposed extension of the collection of the Unemployment Insurance Benefit Accuracy Measurement program data (OMB control number 1205–0245) now authorized through 9/30/99. A copy of the proposed changes to the information collection Handbook (ETA Handbook 395) can be obtained by contacting the employee listed below in the contact section of this notice.

DATES: Written comments must be submitted on or before August 13, 1999.

ADDRESSES: Comments may be submitted to: Grace A. Kilbane, Director, Unemployment Insurance Service, Employment and Training Administration, U.S. Department of Labor, Room S–4231, 200 Constitution Avenue, N.W., Washington, DC 20210, 202–219–7831, ext. 167 (this is not a toll-free number); FAX, 202–219–8506; Internet: <gkilbane@doleta.gov>.

FOR FURTHER INFORMATION CONTACT: William N. Coyne, Unemployment Insurance Service, Employment and Training Administration, U.S. Department of Labor, Room S–4522, 200 Constitution Avenue, N.W., Washington, DC 20210, 202–219–5223, ext. 142 (this is not a toll-free number); FAX, 202–219–8506; Internet: <wcoyne@doleta.gov>.

SUPPLEMENTARY INFORMATION:

I. Background

Since 1987, all State Employment Security Agencies (SESAs) except in the U.S. Virgin Islands have been required by regulation at 20 CFR Part 602 to operate Benefit Accuracy Measurement (BAM) programs to assess the accuracy of their Unemployment Insurance (UI) benefit payments. The Department's statutory authority for those regulations is found at Sections 303(a)(1), 303(a)(6), and 303(b) of the Social Security Act. The BAM programs operate as follows: each State draws a weekly sample of payments made for intrastate claims made in the State UI, Unemployment Compensation for Federal Employees, and Unemployment Compensation for Ex-Service Members programs. States are required to draw minimum annual samples. The ten States with the smallest claims loads must draw at least 360 payments; all other States must draw at least 480, although several voluntarily draw longer samples. In calendar years 1998, annual samples averaged slightly over 500 cases per State, and ranged from 360 to 1730. A specially trained staff of State investigators reviews agency records and contacts the claimant, employers, and third parties to verify all the information pertinent to the benefit amount for the sampled week. Although contacts originally had to be made in person, since July 1993, investigators have been able to use a mix of in-person, mail, and telephone/fax contacts to verify information. Using the verified information, they determined what the benefit payment should have been to accord fully with State law and policy. Any differences between the actual and reconstructed payment are underpayment or overpayment errors. States code the results of each case investigated to a database on a computer provided by the Department of Labor. Data on each case include the type and causes of, and parties responsible for, any error, and a variety of demographic, labor market, and UI program information considered critical to developing program improvements and useful to the States and the Department for other analytical purposes. The States and the Department of Labor use BAM information to estimate the extent of mispayments, to monitor program quality, guide possible future program improvements, inform system stakeholders, and perform various policy analyses. Because of the extent of the BAM data record and its representatives of the population of payments, the Department uses the data extensively to produce information on State program operations (e.g., how many claims are filed electronically, how many claimants receive eligibility reviews) and characteristics of the claimant population. It is an invaluable resource for producing measures such as the percent of wages which UI benefits replace for those actually receiving a benefit. The program costs approximately $22 million each year to operate.

The typical investigation requires about 7.5 hours per case and in total the allocated 23,760 cases are estimated to impose a paperwork burden of 75,319 hours. The program is operated under OMB control number 1205–0245; approval under this number expires 9/30/99.

II. Review Focus

The Department of Labor is particularly interested in comments which:

—Evaluate whether the proposed collection of information is necessary for the proper performance of the functions of the agency, including whether the information will have practical utility;

—Evaluate the accuracy of the agency's estimate of the burden of the proposed collection of information, including the validity of the methodology and assumptions used;

—Enhance the quality, utility, and clarity of the information to be collected; and

—Minimize the burden of the collection of information on those who are to respond, including through the use of appropriate automated, electronic, mechanical, or other technological collection techniques or other forms of information technology, e.g., permitting electronic submission of responses.

III. Current Actions

This is a request for OMB approval (under the Paperwork Reduction Act of 1995 (44 U.S.C. 3506(c)(2)(A)) to extend an existing collection of information previously approved and assigned OMB Control No. 1205–0245. Burden hours would remain the same at 75,319.

Type of Review: Extension.

Agency: Employment and Training Administration.

Title: Unemployment Insurance Benefit Accuracy Measurement Program.

OMB Number: 1205–0245.

Frequency: Weekly.

Recordkeeping: States are required to follow their State laws regarding public record retention in retaining BAM records.

Affected Public: Individuals; businesses; other for-profit/not-for-profit institutions; farms; Federal, State, Local, or Tribal Governments.

Number of Respondents: 52.

Estimated Time Per Response: 3.17 hours.

Total Estimated Cost: $22 million.

Total Burden Hours: 75,319 hours.

Comments submitted in response to this notice will be summarized and/or included in the request for Office of Management and Budget approval of the information collection request; they will also become a matter of public record.

Dated: June 7, 1999.

Grace A. Kilbane,

Director, Unemployment Insurance Service.

[FR Doc. 99–14964 Filed 6–11–99; 8:45 am]

BILLING CODE 4510–30–M

NATIONAL AERONAUTICS AND SPACE ADMINISTRATION

Notice [99–081]

NASA Advisory Council (NAC), Aero-Space Technology Advisory Committee (ASTAC); Meeting

AGENCY: National Aeronautics and Space Administration.

ACTION: Notice of meeting.

SUMMARY: In accordance with the Federal Advisory Committee Act, Public Law 92–463, as amended, the National Aeronautics and Space Administration announces a forthcoming meeting of the NASA Advisory Council, Aero-Space Technology Advisory Committee.

DATES: Tuesday, July 13, 1999, 9:00 a.m. to 5:00 p.m.; and Wednesday, July 14, 1999, 8:00 a.m. to 12:00 noon.

ADDRESSES: National Aeronautics and Space Administration, Room 7H46, 300 E Street, SW, Washington, DC 20546.

FOR FURTHER INFORMATION CONTACT: Ms. Mary-Ellen McGrath, Office of Aero-Space Technology, National Aeronautics and Space Administration, Washington, DC 20546 (202/358–4729).

SUPPLEMENTARY INFORMATION: The meeting will be open to the public up to the seating capacity of the room. The agenda for the meeting is as follows:

—Aero-Space Technology Overview
—National Transonic Facility Productivity Report
—Role of the ASTAC in the Government Performance and Results Act
—Subcommittee Reports
—FAA/NASA Partnership Agreement
—FAA/NASA Executive Committee Activities

It is imperative that the meeting be held on these dates to accommodate the scheduling priorities of the key participants.

Dated: June 2, 1999.

Matthew M. Crouch,

Advisory Committee Management Officer, National Aeronautics and Space Administration.

[FR Doc. 99–15035 Filed 6–11–99; 8:45 am]

BILLING CODE 7510–01–P

NATIONAL CAPITAL PLANNING COMMISSION

Senior Executive Service Performance Board Members

AGENCY: National Capital Planning Commission.

ACTION: Notice of members of Senior Executive Service Performance Review Board.

SUMMARY: Section 4314(c) of Title 5, U.S.C. (as amended by the Civil Service Reform Act of 1978) requires each agency to establish, in accordance with regulations prescribed by the Office of Personnel Management, one or more Performance Review Boards (PRB) to review, evaluate, and make a final recommendation on performance appraisals assigned to individual members of the agency's Senior Executive Service (SES). The PRB established for the National Capital Planning Commission also makes recommendations to the agency head regarding SES performance awards, ranks and bonuses, and recertification. Section 4314 (c) (4) requires that notice of appointment of Performance Review Board Members be published in the **Federal Register**. The following persons have been appointed to serve as members of the Performance Review Board for the National Capital Planning Commission: Reginald W. Griffith, Stephen E. Crable, Patricia Cornwell-Johnson, Solly Thomas, and Gloria J. Joseph, from May 20, 1999 to May 20, 2001.

FOR FURTHER INFORMATION CONTACT: Connie M. Harshaw, Assistant Executive Director (Management), National Capital Planning Commission, 801 Pennsylvania Avenue, N.W., Suite 301, Washington, DC 20576 (202) 482–7200.

Dated: June 8, 1999.

Sandra H. Shapiro,

General Counsel, National Capital Planning Commission

[FR Doc. 99–15026 Filed 6–11–99; 8:45 am]

BILLING CODE 7520–01–P

NATIONAL FOUNDATION ON THE ARTS AND THE HUMANITIES

National Endowment for the Arts

Leadership Initiatives Advisory Panel

Pursuant to Section 10(a)(2) of the Federal Advisory Committee Act (Pub. L. 463), as amended, notice is hereby given that a meeting of the Leadership Initiatives Advisory Panel (Dance Section) to the National Council on the Arts will be held on June 18, 1999. The panel will meet from 3:00 p.m. to 4:00 p.m. via teleconference from room 726 at the Nancy Hanks Center, 1100 Pennsylvania Avenue, NW., Washington, DC 20506.

This meeting is for the purpose of Panel review, discussion, evaluation, and recommendations on financial assistance under the National Foundation on the Arts and the Humanities Act of 1965, as amended, including information given in confidence to the agency. In accordance with the determination of the Chairman of May 12, 1999, these sessions will be closed to the public pursuant to subsection (c)(4),(6) and (9)(B) of section 552b of Title 5, United States Code.

Further information with reference to this meeting can be obtained from Ms. Kathy Plowitz-Worden, Panel Coordinator, National Endowment for the Arts, Washington, DC 20506, or call (202) 682–5691.

Dated: June 10, 1999.

Kathy Plowitz-Worden,

Panel Coordinator, National Endowment for the Arts.

[FR Doc. 99–15134 Filed 6–11–99; 8:45 am]

BILLING CODE 7537–01–M

NUCLEAR REGULATORY COMMISSION

[Docket No. 50–440]

Cleveland Electric Illuminating Company; Toledo Edison Company; Ohio Edison Company; OES Nuclear, Inc.; Pennsylvania Power Company; Duquesne Light Company and Firstenergy Nuclear Operating Company; Perry Nuclear Power Plant, Unit 1; Notice of Consideration of Approval of Transfer of Facility Operating License and Issuance of Conforming Amendment, and Opportunity for a Hearing

The U.S. Nuclear Regulatory Commission (the Commission) is considering the issuance of an order under 10 CFR 50.80 approving the transfer of certain interests in Facility Operating License No. NPF–58 for the Perry Nuclear Power Plant, Unit 1 (PNPP) currently held by the Cleveland Electric Illuminating Company (CEI), Toledo Edison Company, Ohio Edison Company, OES Nuclear, Inc., Pennsylvania Power Company, and Duquesne Light Company (DLC), as owners of PNPP, and FirstEnergy Nuclear Operating Company (FENOC) as the licensed operator of PNPP. The proposed action would consent to the transfer of DLC's ownership interests in PNPP to CEI. The Commission is also considering amending the license for administrative purposes to reflect the proposed transfer.

According to an application filed by CEI, DLC, and FENOC, the proposed transfer is being undertaken pursuant to a DLC restructuring plan and agreements to exchange generating assets between DLC and FirstEnergy Corporation, the parent of CEI and FENOC and other co-licensees of Perry. The amendment requested in the application would delete DLC as an owner of PNPP to reflect the transfer. No physical changes to the PNPP facility or operational changes are being proposed in the application.

Pursuant to 10 CFR 50.80, no license, or any right thereunder, shall be transferred, directly or indirectly, through transfer of control of the license, unless the Commission shall give its consent in writing. The Commission will approve an application for the transfer of a license, if the Commission determines that the proposed transferee is qualified to hold the license, and that the transfer is otherwise consistent with applicable provisions of law, regulations, and orders issued by the Commission pursuant thereto.

Before issuance of the proposed conforming license amendment, the Commission will have made findings required by the Atomic Energy Act of 1954, as amended (the Act), and the Commission's regulations.

As provided in 10 CFR 2.1315, unless otherwise determined by the Commission with regard to a specific application, the Commission has determined that any amendment to the license of a utilization facility which does no more than conform the license to reflect the transfer action involves no significant hazards consideration. No contrary determination has been made with respect to this specific license amendment application. In light of the generic determination reflected in 10 CFR 2.1315, no public comments with respect to significant hazards considerations are being solicited, notwithstanding the general comment procedures contained in 10 CFR 50.91.

The filing of requests for hearing and petitions for leave to intervene, and written comments with regard to the license transfer application, are discussed below.

By July 6, 1999, any person whose interest may be affected by the Commission's action on the application may request a hearing, and, if not the applicants, may petition for leave to intervene in a hearing proceeding on the Commission's action. Requests for a hearing and petitions for leave to intervene should be filed in accordance with the Commission's rules of practice set forth in Subpart M, ''Public Notification, Availability of Documents and Records, Hearing Requests and Procedures for Hearings on License Transfer Applications,'' of 10 CFR part 2. In particular, such requests and petitions must comply with the requirements set forth in 10 CFR 2.1306, and should address the considerations contained in 10 CFR 2.1308(a). Untimely requests and petitions may be denied, as provided in 10 CFR 2.1308(b), unless good cause for failure to file on time is established. In addition, an untimely request or petition should address the factors that the Commission will also consider, in reviewing untimely requests or petitions, set forth in 10 CFR 2.1308(b)(1)–(2).

Requests for a hearing and petitions for leave to intervene should be served upon Mary E. O'Reilly, counsel for CEI, at FirstEnergy Corporation, 76 South Main Street, Akron, OH 44308 (tel: 303–384–5224; fax: 330–384–3875; e-mail: *meoreilly@firstenergycorp.com*), Roy P. Lessy, counsel for CEI, at Akin, Gump, Strauss, Hauer, & Feld, LLP, 1333 New Hampshire Ave., N.W., Suite 400, Washington, DC 20036 (tel: 202–887–4500; fax: 202–887–4288; e-mail: *rlessy@akingump.com*), Larry R. Crayne, counsel for DLC, at Duquesne Light Company, 411 Seventh Ave., Pittsburgh, PA 15219 (tel: 412–293–6049; fax: 412–393–6645; e-mail: *larry r crayne@dlc.dqe.com*), and John E. Matthews, counsel for DLC, at Morgan, Lewis & Bockius, LLP, 1800 M Street, N.W., Washington, DC 20036 (tel: 202–467–7524; fax: 202–467–7176; e-mail: *matt7524@mlb.com*); and the General Counsel, U.S. Nuclear Regulatory Commission, Washington, DC 20555 (e-mail address for filings regarding license transfer cases only: OGCLT@NRC.gov); and the Secretary of the Commission, U.S. Nuclear Regulatory Commission, Washington, DC 20555–0001, Attention: Rulemakings and Adjudications Staff, in accordance with 10 CFR 2.1313.

The Commission will issue a notice or order granting or denying a hearing request or intervention petition, designating the issues for any hearing that will be held and designating the Presiding Officer. A notice granting a hearing will be published in the **Federal Register** and served on the parties to the hearing.

As an alternative to requests for hearing and petitions to intervene, by July 14, 1999, persons may submit written comments regarding the license transfer application, as provided for in 10 CFR 2.1305. The Commission will consider and, if appropriate, respond to these comments, but such comments will not otherwise constitute part of the decisional record. Comments should be submitted to the Secretary, U.S. Nuclear Regulatory Commission, Washington, DC 20555–0001, Attention: Rulemakings and Adjudications Staff, and should cite the publication date and page number of this **Federal Register** notice.

For further details with respect to this action, see the application dated May 5, 1999, available for public inspection at the Commission's Public Document Room, the Gelman Building, 2120 L Street, NW., Washington, DC, and at the local public document room located at the Perry Public Library, 3753 Main Street, Perry, OH 44081.

Dated at Rockville, Maryland this 8th day of June 1999.

For the Nuclear Regulatory Commission.

Anthony J. Mendiola,

Chief, Section 2, Project Directorate III, Division of Licensing Project Management, Office of Nuclear Reactor Regulation.

[FR Doc. 99–15022 Filed 6–11–99; 8:45 am]

BILLING CODE 7590–01–P

NUCLEAR REGULATORY COMMISSION

[Docket Nos. 50–334 and 50–412]

Duquesne Light Company, Ohio Edison Company, Pennsylvania Power Company, The Cleveland Electric Company, The Toledo Edison Company, and Beaver Valley Power Station, Unit Nos. 1 and 2; Notice of Consideration of Approval of Transfer of Facility Operating Licenses and Issuance of Conforming Amendments, and Opportunity for a Hearing

The U.S. Nuclear Regulatory Commission (the Commission) is considering the issuance of an order under 10 CFR 50.80 approving the transfer of the interests held by Duquesne Light Company (DLC) in Facility Operating Licenses Nos. DPR–66 and NPF–73 for the Beaver Valley Power Station, Unit Nos. 1 and 2 (BVPS–1 and BVPS–2), located in Beaver County, Pennsylvania, as part owner and exclusive licensed operator of BVPS–1 and BVPS–2. The Commission is also considering issuance of conforming amendments to the licenses under 10 CFR 50.90.

According to an application for approval filed by DLC and FirstEnergy Nuclear Operating Company (FENOC), Pennsylvania Power Company (Penn Power), which currently owns 17.5% of BVPS–1, is to acquire DLC's 47.5 % ownership interest, resulting in 65% ownership, in BVPS–1, and DLC's 13.74% ownership interest in BVPS–2 pursuant to a DLC restructuring plan and agreements between DLC and FirstEnergy Corporation of which FENOC and Penn Power are subsidiaries. Additionally, FENOC would become the exclusive licensed operator responsible for the operation, maintenance, and eventual decommissioning of BVPS–1 and BVPS–2. No physical changes to the BVPS–1 and BVPS–2 facility or operational changes are being proposed in the application.

The proposed conforming amendments would replace references to DLC in the licenses with references to Penn Power and FENOC, as appropriate, to reflect the proposed transfer.

Pursuant to 10 CFR 50.80, no license, or any right thereunder, shall be transferred, directly or indirectly, through transfer of control of the license, unless the Commission shall give its consent in writing. The Commission will approve an application for the transfer of a license, if the Commission determines that the proposed transferee is qualified to hold the license, and that the transfer is otherwise consistent with applicable provisions of law, regulations, and orders issued by the Commission pursuant thereto.

Before issuance of the proposed conforming license amendments, the Commission will have made findings required by the Atomic Energy Act of 1954, as amended (the Act), and the Commission's regulations.

As provided in 10 CFR 2.1315, unless otherwise determined by the Commission with regard to a specific application, the Commission has determined that any amendment to the license of a utilization facility which does no more than conform the license to reflect the transfer action involves no significant hazards consideration. No contrary determination has been made with respect to this specific license amendment application. In light of the generic determination reflected in 10 CFR 2.1315, no public comments with respect to significant hazards considerations are being solicited, notwithstanding the general comment procedures contained in 10 CFR 50.91.

The filing of requests for hearing and petitions for leave to intervene, and written comments with regard to the license transfer application, are discussed below.

By July 6, 1999, any person whose interest may be affected by the Commission's action on the application may request a hearing, and, if not the applicants, may petition for leave to intervene in a hearing proceeding on the Commission's action. Requests for a hearing and petitions for leave to intervene should be filed in accordance with the Commission's rules of practice set forth in Subpart M, ''Public Notification, Availability of Documents and Records, Hearing Requests and Procedures for Hearings on License Transfer Applications,'' of 10 CFR Part 2. In particular, such requests and petitions must comply with the requirements set forth in 10 CFR 2.1306, and should address the considerations contained in 10 CFR 2.1308(a). Untimely requests and petitions may be denied, as provided in 10 CFR 2.1308(b), unless good cause for failure to file on time is established. In addition, an untimely request or petition should address the factors that the Commission will also consider, in reviewing untimely requests or petitions, set forth in 10 CFR 2.1308(b)(1)–(2).

Requests for a hearing and petitions for leave to intervene should be served upon Mary E. O'Reilly, Counsel for FENOC, at FirstEnergy, 76 South Main Street, Akron, OH 44308 (tel: 330–384–5224; fax: 330–384–3875; e-mail: *meoreilly@firstenergycorp.com*); Roy P. Lessy, Counsel for FENOC, at Akin, Gump, Stausss, Hauer & Feld, L.L.P.; 1333 New Hampshire Avenue, NW, Suite 400, Washington, DC 20036 (tel: 202–887–4500; fax: 202–887–4288; e-mail: *rlessy@akingump.com*); Larry R. Crayne, Assistant General Counsel, Duquesne Light Company, 411 Seventh Avenue, Pittsburgh, PA 15219 (tel: 412–393–6049; fax: 412–393–6645; e-mail: *larryrcrayne@dlc.dqe.com*); John E. Mathews, Counsel for DLC, at Morgan, Lewis & Bockius, LLP; 1800 M Street, NW, Washington, DC 20036–5869 (tel: 202–467–7524, fax: 202–467–7176, e-mail: *matt7524@mlb.com*); the General Counsel, U.S. Nuclear Regulatory Commission, Washington, DC 20555 (e-mail address for filings regarding license transfer case only: OGCLT@NRC.gov); and the Secretary of the Commission, U.S. Nuclear Regulatory Commission, Washington, DC 20555–0001, Attention: Rulemakings and Adjudications Staff, in accordance with 10 CFR 2.1313.

The Commission will issue a notice or order granting or denying a hearing request or intervention petition, designating the issues for any hearing that will be held and designating the Presiding Officer. A notice granting a hearing will be published in the **Federal Register** and served on the parties to the hearing.

As an alternative to requests for hearing and petitions to intervene, by July 14, 1999, persons may submit written comments regarding the license transfer application, as provided for in 10 CFR 2.1305. The Commission will consider and, if appropriate, respond to these comments, but such comments will not otherwise constitute part of the decisional record. Comments should be submitted to the Secretary, U.S. Nuclear Regulatory Commission, Washington, DC 20555–0001, Attention: Rulemakings and Adjudications Staff, and should cite the publication date and page number of this **Federal Register** notice.

For further details with respect to this action, see the application dated May 5, 1999, available for public inspection at the Commission's Public Document Room, the Gelman Building, 2120 L Street, NW., Washington, DC, and at the local public document room located at the B.F. Jones Memorial Library, 663 Franklin Avenue, Aliquippa, PA 15001.

Dated at Rockville, Maryland this 8th day of June 1999.

For the Nuclear Regulatory Commission.

Daniel S. Collins,

Project Manager, Section 1, Project Directorate I, Division of Licensing Project Management, Office of Nuclear Reactor Regulation.

[FR Doc. 99–15021 Filed 6–11–99; 8:45 am]

BILLING CODE 7590–01–P

NUCLEAR REGULATORY COMMISSION

[Docket Nos. 50–445 and 446]

Texas Utilities Electric Company; Notice of Consideration of Issuance of Amendment to Facility Operating License, Proposed No Significant Hazards Consideration Determination, and Opportunity for a Hearing

The U.S. Nuclear Regulatory Commission (the Commission) is considering issuance of amendments to Facility Operating License No. NPF–87 and Facility Operating License No. NPF–89 issued to Texas Utilities Electric Company (the licensee, or TU), for operation of the Comanche Peak Steam Electric Station (CPSES), Units 1 and 2, respectively, located in Somervell County, Texas.

The proposed amendments would add a footnote to Technical Specification (TS) 4.8.2.1e, ''D.C. Sources—Operating,'' which would, on a one-time basis for Unit 1 Battery BT1ED2, allow the licensee to substitute a performance discharge test ''* * * in lieu of the battery service test required by Specification 4.8.2.1d, twice within a 60 month interval.'' The footnote further states that ''[t]his one time exception expires prior to entry into MODE 4 following the next Unit 1 outage of sufficient duration to perform a service test.'' The proposed amendments would also add a footnote to the comparable Improved TS (ITS) that were issued by the NRC staff as License Amendments 64 and 64, to the CPSES, Units 1 and 2, Facility Operating Licenses on February 26, 1999, but not as yet implemented by the licensee. In this regard, ITS Surveillance Requirement 3.8.4.7 would receive the same footnote added to TS 4.8.2.1e with a minor grammatical change.

In the licensee's letter dated May 28, 1999, the licensee explained the exigent circumstances associated with its May 27, 1999, application. The licensee noted that the normal 30-day **Federal Register** notice period could not be utilized because the application results from the issuance of an enforcement discretion. The NRC responded to the licensee's May 26, 1999, request for an enforcement discretion by issuing a Notice of Enforcement Discretion (NOED) on June 2, 1999. The subject NOED indicated that the NRC staff plans to complete its review and issue the license amendments within 4 weeks of the date of the NOED, which is less time than permitted by the normal 30-day **Federal Register** notice period.

Before issuance of the proposed license amendments, the Commission will have made findings required by the Atomic Energy Act of 1954, as amended (the Act) and the Commission's regulations.

Pursuant to 10 CFR 50.91(a)(6) for amendments to be granted under exigent circumstances, the NRC staff must determine that the amendment request involves no significant hazards consideration. Under the Commission's regulations in 10 CFR 50.92, this means that operation of the facility in accordance with the proposed amendment would not (1) involve a significant increase in the probability or consequences of an accident previously evaluated; or (2) create the possibility of a new or different kind of accident from any accident previously evaluated; or (3) involve a significant reduction in a margin of safety. As required by 10 CFR 50.91(a), the licensee has provided its analysis of the issue of no significant hazards consideration, which is presented below:

1. Do the proposed changes involve a significant increase in the probability or consequences of an accident previously evaluated?

Crediting the battery performance discharge test in lieu of the required service test will not impact the ability of the battery to perform its safety functions. Therefore, this change will not increase the probability or consequences of an accident previously evaluated.

2. Do the proposed changes create the possibility of a new or different kind of accident from any accident previously evaluated?

Crediting the performance discharge test in lieu of the required service test will not create a new or different kind of accident.

3. Do the proposed changes involve a significant reduction in a margin of safety?

Crediting the performance discharge test in lieu of the required service test does not create any new failure scenarios and no margin is expected to be reduced. As such, there is no reduction in any margin of safety.

The NRC staff has reviewed the licensee's analysis and, based on this review, it appears that the three standards of 10 CFR 50.92(c) are satisfied. Therefore, the NRC staff proposes to determine that the amendment request involves no significant hazards consideration.

The Commission is seeking public comments on this proposed determination. Any comments received within 14 days after the date of publication of this notice will be considered in making any final determination.

Normally, the Commission will not issue the amendments until the expiration of the 14-day notice period. However, should circumstances change during the notice period, such that failure to act in a timely way would result, for example, in derating or shutdown of the facility, the Commission may issue the license amendments before the expiration of the 14-day notice period, provided that its final determination is that the amendments involve no significant hazards consideration. The final determination will consider all public and State comments received. Should the Commission take this action, it will publish in the **Federal Register** a notice of issuance. The Commission expects that the need to take this action will occur very infrequently.

Written comments may be submitted by mail to the Chief, Rules and Directives Branch, Division of Administrative Services, Office of Administration, U.S. Nuclear Regulatory Commission, Washington, DC 20555–0001, and should cite the publication date and page number of this **Federal Register** notice. Written comments may also be delivered to Room 6D59, Two White Flint North, 11545 Rockville Pike, Rockville, Maryland, from 7:30 a.m. to 4:15 p.m. Federal workdays. Copies of written comments received may be examined at the NRC's Public Document Room, the Gelman Building, 2120 L Street, NW., Washington, DC.

The filing of requests for hearing and petitions for leave to intervene is discussed below. By July 14, 1999, the licensee may file a request for a hearing with respect to issuance of the amendments to the subject facility operating licenses and any person whose interest may be affected by this proceeding and who wishes to participate as a party in the proceeding must file a written request for a hearing and a petition for leave to intervene. Requests for a hearing and a petition for leave to intervene shall be filed in accordance with the Commission's ''Rules of Practice for Domestic Licensing Proceedings'' in 10 CFR Part 2. Interested persons should consult a current copy of 10 CFR 2.714 which is available at the Commission's Public Document Room, the Gelman Building, 2120 L Street, NW., Washington, DC, and at the local public document room located at the University of Texas at Arlington Library, Government Publications/Maps, 702 College, P.O.

Box 19497, Arlington, Texas. If a request for a hearing or petition for leave to intervene is filed by the above date, the Commission or an Atomic Safety and Licensing Board, designated by the Commission or by the Chairman of the Atomic Safety and Licensing Board Panel, will rule on the request and/or petition; and the Secretary or the designated Atomic Safety and Licensing Board will issue a notice of hearing or an appropriate order.

As required by 10 CFR 2.714, a petition for leave to intervene shall set forth with particularity the interest of the petitioner in the proceeding, and how that interest may be affected by the results of the proceeding. The petition should specifically explain the reasons why intervention should be permitted with particular reference to the following factors: (1) The nature of the petitioner's right under the Act to be made a party to the proceeding; (2) the nature and extent of the petitioner's property, financial, or other interest in the proceeding; and (3) the possible effect of any order which may be entered in the proceeding on the petitioner's interest. The petition should also identify the specific aspect(s) of the subject matter of the proceeding as to which petitioner wishes to intervene. Any person who has filed a petition for leave to intervene or who has been admitted as a party may amend the petition without requesting leave of the Board up to 15 days prior to the first prehearing conference scheduled in the proceeding, but such an amended petition must satisfy the specificity requirements described above.

Not later than 15 days prior to the first prehearing conference scheduled in the proceeding, a petitioner shall file a supplement to the petition to intervene which must include a list of the contentions which are sought to be litigated in the matter. Each contention must consist of a specific statement of the issue of law or fact to be raised or controverted. In addition, the petitioner shall provide a brief explanation of the bases of the contention and a concise statement of the alleged facts or expert opinion which support the contention and on which the petitioner intends to rely in proving the contention at the hearing. The petitioner must also provide references to those specific sources and documents of which the petitioner is aware and on which the petitioner intends to rely to establish those facts or expert opinion. Petitioner must provide sufficient information to show that a genuine dispute exists with the applicant on a material issue of law or fact. Contentions shall be limited to matters within the scope of the amendment under consideration. The contention must be one which, if proven, would entitle the petitioner to relief. A petitioner who fails to file such a supplement which satisfies these requirements with respect to at least one contention will not be permitted to participate as a party.

Those permitted to intervene become parties to the proceeding, subject to any limitations in the order granting leave to intervene, and have the opportunity to participate fully in the conduct of the hearing, including the opportunity to present evidence and cross-examine witnesses.

If the amendment is issued before the expiration of the 30-day hearing period, the Commission will make a final determination on the issue of no significant hazards consideration. If a hearing is requested, the final determination will serve to decide when the hearing is held.

If the final determination is that the amendment request involves no significant hazards consideration, the Commission may issue the amendments and make them immediately effective, notwithstanding the request for a hearing. Any hearing held would take place after issuance of the amendments.

If the final determination is that the amendment request involves a significant hazards consideration, any hearing held would take place before the issuance of any amendment.

A request for a hearing or a petition for leave to intervene must be filed with the Secretary of the Commission, U.S. Nuclear Regulatory Commission, Washington, DC 20555–0001, Attention: Rulemakings and Adjudications Staff, or may be delivered to the Commission's Public Document Room, the Gelman Building, 2120 L Street, NW., Washington, DC, by the above date. A copy of the petition should also be sent to the Office of the General Counsel, U.S. Nuclear Regulatory Commission, Washington, DC 20555–0001, and to George L. Edgar, Esq., Morgan, Lewis and Bockius, 1800 M Street, NW., Washington, DC 20036, attorney for the licensee.

Nontimely filings of petitions for leave to intervene, amended petitions, supplemental petitions and/or requests for hearing will not be entertained absent a determination by the Commission, the presiding officer or the presiding Atomic Safety and Licensing Board that the petition and/or request should be granted based upon a balancing of the factors specified in 10 CFR 2.714(a)(1)(i)–(v) and 2.714(d).

For further details with respect to this action, see the application for amendments dated May 27, 1999, as supplement by letter dated May 28, 1999, which are available for public inspection at the Commission's Public Document Room, the Gelman Building, 2120 L Street, NW., Washington, DC, and at the local public document room located at the University of Texas at Arlington Library, Government Publications/Maps, 702 College, P. O. Box 19497, Arlington, Texas.

Dated at Rockville, Maryland, this 7th day of June 1999.

For the Nuclear Regulatory Commission.

Jack N. Donohew,

Acting Chief, Section 1, Project Directorate IV & Decommissioning, Division of Licensing Project Management, Office of Nuclear Reactor Regulation.

[FR Doc. 99–15020 Filed 6–11–99; 8:45 am]

BILLING CODE 7590–01–P

NUCLEAR REGULATORY COMMISSION

[Docket No. 50–151]

Notice and Solicitation of Comments Pursuant to 10 CFR 20.1405 and 10 CFR 50.82(b)(5) Concerning Proposed Action to Decommission University of Illinois at Urbana-Champaign University of Illinois Advanced Triga Research Reactor

Notice is hereby given that the U.S. Nuclear Regulatory Commission (the Commission) has received an application from the University of Illinois at Urbana-Champaign dated November 13, 1998, as supplemented on May 11, 1999, for a license amendment approving its proposed decommissioning plan for the University of Illinois Advanced TRIGA Research Reactor (Facility License No. R–115) located in the Nuclear Reactor Laboratory on the campus of the University of Illinois at Urbana-Champaign in Urbana, Illinois.

In accordance with 10 CFR 20.1405, the Commission is providing notice and soliciting comments from local and State governments in the vicinity of the site and any Indian Nation or other indigenous people that have treaty or statutory rights that could be affected by the decommissioning. This notice and solicitation of comments is published pursuant to 10 CFR 20.1405, which requires publication in the **Federal Register** and in a forum such as local newspapers, letters to State or local organizations, or other appropriate forum, that is readily accessible to individuals in the vicinity of the site. Comments should be provided within 30 days of the date of this notice to Ledyard Marsh, Chief, Events

Assessment, Generic Communications and Non-Power Reactors Branch, U.S. Nuclear Regulatory Commission, Washington, D.C. 20555.

Further, in accordance with 10 CFR 50.82(b)(5), notice is also provided of the Commission's intent to approve the plan by amendment, subject to such conditions and limitations as it deems appropriate and necessary, if the plan demonstrates that decommissioning will be performed in accordance with the regulations in this chapter and will not be inimical to the common defense and security or to the health and safety of the public.

A copy of the application is available for public inspection at the Commission's Public Document Room, the Gelman Building, at 2120 L Street NW., Washington, D.C. 20003.

Dated at Rockville, Maryland, this 7th day of June 1999.

For the Nuclear Regulatory Commission.

Ledyard B. Marsh,

Chief, Events Assessment, Generic Communications and Non-Power Reactors Branch, Division of Regulatory Improvement Programs, Office of Nuclear Reactor Regulation.

[FR Doc. 99–15019 Filed 6–11–99; 8:45 am]

BILLING CODE 7590–01–P

PRESIDIO TRUST

Public Health Service Hospital Complex, The Presidio of San Francisco, California; Notice of Intent To Prepare a Supplemental Environmental Impact Statement

AGENCY: The Presidio Trust.

ACTION: Notice of intent to prepare a supplemental environmental impact statement for the proposed leasing and redevelopment or rehabilitation of approximately 412,000 square feet of building space located on the site of the Public Health Service Hospital (PHSH) Complex, The Presidio of San Francisco (Presidio).

Description of Proposed Action and Alternatives

The Presidio Trust (Trust) will prepare a supplemental environmental impact statement (EIS) for the redevelopment of the site of the former PHSH Complex, located near the 15th Avenue entrance in the southern area of the Presidio. The site encompasses approximately 36 acres and approximately 412,000 square feet of building space within 17 existing structures. The largest structure is the former PHSH, totalling approximately 314,000 square feet. The supplemental EIS will tier from the 1994 Presidio General Management Plan Amendment (GMPA) final EIS pursuant to 40 CFR 1508.28. The GMPA EIS analyzed alternative development concepts for the future of the Presidio, including a specific proposal for the PHSH Complex. Because the proposed development within the PHSH Complex would involve rehabilitation of historic buildings or development of new replacement construction and potential uses that were not previously examined in the GMPA EIS, the Trust has concluded that additional analysis is appropriate and will further the purposes of the National Environmental Policy Act of 1969. Alternatives currently being considered for the site include residential/educational conference facilities, various senior housing concepts, health care and medical research. These alternatives arose in part based on feedback received during public meetings and proposals received by the Trust in response to its Request for Qualifications for use of the site. The Trust will identify a preferred alternative following its review of the draft supplemental EIS and other information.

Public Comment

The Trust is inviting the public to participate in two public workshops to comment on the range of alternatives and the specific impacts to be evaluated in the supplemental EIS. The public workshops will be held on July 14, 1999 and July 21, 1999, from 6:00 to 9:00 p.m., at the Presidio Golden Gate Club, Fisher Loop, the Presidio, California. Notice of the workshops is being given in a timely manner through this announcement, announcements in the Trust's monthly newsletter and other local media, direct mailing to nearby property owners, posting on the Trust's website (www.presidiotrust.gov) and other means. Written comments concerning this notice must be sent to John Pelka, NEPA Compliance Coordinator, the Presidio Trust, 34 Graham Street, P.O. Box 29052, San Francisco, CA 94129–0052. Fax: 415–561–5315. E-mail: jpelka@presidiotrust.gov. Comments must be received by August 13, 1999.

FOR FURTHER INFORMATION CONTACT: John Pelka, NEPA Compliance Coordinator, the Presidio Trust, 34 Graham Street, P.O. Box 29052, San Francisco, CA 94129–0052. Telephone: 415–561–5300.

Dated: June 8, 1999.

Karen A. Cook,

General Counsel.

[FR Doc. 99–14968 Filed 6–11–99; 8:45 am]

BILLING CODE 4310–4R–U

SECURITIES AND EXCHANGE COMMISSION

Submission for OMB Review; Comment Request

Upon Written Request, Copies Available From: Securities and Exchange Commission, Office of Filings and, Information Service, Washington, D.C. 20549–0007

Extension:

Rule 17f–4 [17 CFR 270.17f–4] SEC File No. 270–232 OMB Control No. 3235–025

Notice is hereby given that, pursuant to the Paperwork Reduction Act of 1995 (44 U.S.C. 3501–3520), the Securities and Exchange Commission (the ''Commission'') has submitted to the Office of Management and Budget (''OMB'') a request for extension and approval of the collection of information described below.

Section 17(f)[1] of the Investment Company Act of 1940[2] (the ''Act'') permits registered management investment companies (''funds'') and their custodians to maintain fund assets in a system for the central handling of securities, subject to Commission rules. Rule 17f–4[3] under the Act defines this type of system as a ''securities depository.'' The rule sets conditions for the use of certain depositories, including U.S.-registered clearing agency that acts as a depository, and the federal book-entry system for government securities.[4]

Certain information collection requirements apply to the fund's custodian when, as in the usual case, a fund uses a depository through its custodian. Rule 17f–4 requires the custodian to send the fund a written confirmation of each transfer of securities to or from the fund's account with the custodian. When securities are transferred to the fund's account, the custodian also must identify as belonging to the fund (or ''earmark'') an appropriate quantity of securities that the custodian holds in a fungible bulk with the depository (or with any agent through which the custodian uses the depository). In addition, the custodian or its agent must send the fund reports it receives concerning the depository's internal accounting controls, and reports on the custodian's or agent's own controls as the fund may reasonably request.

[1] 15 U.S.C. 80a–17(f).

[2] 15 U.S.C. 80a.

[3] 17 CFR 270.17f–4.

[4] Rule 17f–4 does not regulate the use of foreign securities depositories. Funds that maintain securities in foreign depositories must comply with rule 17f–5 under the Act [17 CFR 270.17f–5].

Other information collection requirements apply to the fund. The fund's board of directors must approve by resolution the custodian's arrangement with each depository, and material changes in any arrangement. In the unusual case when a fund deals directly with a depository, the fund board must approve the arrangement with the depository, and the fund must establish a system that is reasonably designed to prevent unauthorized officer's instructions.[5]

Rule 17f–4 facilitates the safe use of depositories, which can simplify the clearance and settlement of securities transactions and reduce risks of loss, theft, and destruction of securities. The rule's requirements that the custodian confirm transactions and earmark a portion of its holdings for the fund help to document the fund's transactions, and provide evidence of the fund's interest in ''omnibus'' depository accounts that may contain the pooled assets of multiple owners. The requirement that the custodian and its agent send the fund reports on internal controls helps the fund and its auditors to evaluate the reliability of the custodian, its agent, and the depository. The requirement that the fund board approve depository arrangements and material changes encourages directors to review periodically the safety of these arrangements. The requirement that the fund have a system to prevent unauthorized officer's instructions helps to protect fund assets from misappropriation.

The Commission staff estimates that 3,400 respondents (including 3,300 funds, 50 bank custodians, and 50 agents of the custodians) make approximately 25,750 responses under the rule each year. The staff estimates that on average, 50 custodians spend 500 hours each year in transmitting daily confirmations to funds and 250 hours in earmarking holdings for funds, and 100 custodians and agents spend 16 hours annually in transmitting reports to funds. The staff estimates that on average, 500 funds spend 6 hours each year in approving new depository arrangements or changes in existing arrangements, and 50 funds spend 10 hours each year in implementing systems to prevent unauthorized officer's instructions. The total annual burden of the rule's requirements for all respondents therefore is estimated to be 42,600 hours ((50 custodians × 750 hours) + (100 custodians and agents × 16 hours) + (500 funds × 6 hours) + (50 funds × 10 hours)).[6]

The estimated annual burden of 42,600 burden hours represents an increase of 17,344 hours over the prior estimate of 25,256 hours. The increase in annual burden hours is attributable to the staff's recognition that the rule imposes information collection requirements of funds as well as custodians, and to increases in the estimated time spent by custodians and agents in collecting information relating to an increasing number of fund transactions.

The estimate of average burden hours is made solely for the purposes of the Paperwork Reduction Act. The estimate is not derived from a comprehensive or even a representative survey or study of the costs of Commission rules. An agency may not conduct or sponsor, and a person is not required to respond to, a collection of information unless it displays a currently valid control number.

Please direct general comments regarding the above information to the following persons: (i) Desk Officer for the Securities and Exchange Commission, Office of Information and Regulatory Affairs, Office of Management and Budget, Room 3208, New Executive Office Building, Washington, DC 20503; and (ii) Michael E. Bartell, Associate Executive Director, Office of Information Technology, Securities and Exchange Commission, 450 5th Street, NW, Washington, DC 20549–0004. Comments must be submitted to OMB within 30 days of this notice.

Dated: June 2, 1999.

Margaret H. McFarland,

Deputy Secretary.

[FR Doc. 99–14986 Filed 6–11–99; 8:45 am]

BILLING CODE 8010–01–M

[5] Officer's instructions are directions to the depository by authorized personnel of the fund.

[6] The estimated average burden hours do not reflect the costs of operating computer systems used by custodians to provide confirmations and earmark assets, and used by funds to help prevent unauthorized officer's instructions.

SECURITIES AND EXCHANGE COMMISSION

Submission for OMB Review; Comment Request

Upon Written Request; Copies Available From: Securities and Exchange Commission, Office of Filings and Information Services, Washington, DC 20549.

Extension: Rule 236; SEC File No. 270–118; OMB Control No. 3235–0095.

Notice is hereby given that, pursuant to the Paperwork Reduction Act of 1995 (44 U.S.C. 3501 *et seq.*), the Securities and Exchange Commission (''Commission'') has submitted to the Office of Management and Budget a request for extension of the previously approved collection of information discussed below.

Rule 236 under the Securities Act of 1933 (''Securities Act'') requires issuers wishing to rely upon an exemption from the Securities Act registration for the issuance of fractional shares, script certificates or order forms, in connection with a stock dividend, stock split, reverse stock split, conversion, merger or similar transaction to furnish specified information to the Commission in writing at least ten days prior to the offering. The information is needed to provide notice that an issuer is relying on the exemption. Public companies are the likely respondents. An estimated ten submissions are made pursuant to Rule 236 annually, resulting in an estimated annual total burden of 15 hours.

The information is needed to establish qualification for reliance on the exemption. The information provided by Rule 236 is required to obtain or retain benefits. All information provided to the Commission is available to the public for review upon request.

General comments regarding the above information should be directed to the following persons: (i) Desk Officer for the Securities and Exchange Commission, Office of Information and Regulatory Affairs, Office of Management and Budget, Room 3208, New Executive Office Building, Washington, DC 20503; and (ii) Michael E. Bartell, Associate Executive Director, Office of Information Technology, Securities and Exchange Commission, 450 Fifth Street, NW., Washington, DC 20549. Comments must be submitted to OMB within 30 days of this notice.

Dated: June 4, 1999.

Margaret H. McFarland,

Deputy Secretary.

[FR Doc. 99–14987 Filed 6–11–99; 8:45 am]

BILLING CODE 8010–01–M

SECURITIES AND EXCHANGE COMMISSION

Submission for OMB Review; Comment Request

Upon Written Request, Copies Available From: Securities and Exchange Commission, Office of Filings and Information Services, Washington, DC 20549

Extension:

Rule 17a–11, SEC File No. 270–94, OMB Control No. 3235–0085

Notice is hereby given that pursuant to the Paperwork Reduction Act of 1995 (44 U.S.C. 3501 et seq.), the Securities and Exchange Commission (''Commission'') has submitted to the Office of Management and Budget a request for extension of the previously approved collection of information discussed below.

Rule 17a–11 (17 CFR 240.17a–11) requires broker-dealers to give notice when certain specified events occur. Specifically, the rule requires a broker-dealer to give notice of a net capital deficiency on the same day that the net capital deficiency is discovered or a broker-dealer is informed by its designated examining authority or the Commission that it is, or has been, in violation of its minimum requirement under Rule 15c3–1 (17 CFR 240.15c3–1) of the Securities Exchange Act of 1934 (''Exchange Act'').

Rule 17a–11 also requires a broker-dealer to send notice promptly (within 24 hours) after the broker-dealer's aggregate indebtedness is in excess of 1,200 percent of its net capital, its net capital is less than 5 percent of aggregate debit items, or its total net capital is less than 120 percent of its required minimum net capital. In addition, a broker-dealer must give notice if it fails to make and keep current books and records required by Rule 17a–3 (17 CFR 240.17a–3), if any material inadequacy is discovered as defined in Rule 17a–5(g) (17 CFR 240.17a–5(g)), and if backtesting exceptions are identified pursuant to Appendix F of Rule 15c3–1 (17 CFR 15c3–1f) for a broker-dealer registered as an OTC derivatives dealer.

The notice required by the rule alerts the Commission, self-regulatory organizations (''SROs''), and the Commodity Futures Trading Commission (''CFTC'') if the broker-dealer is registered as a futures commission merchant, which have oversight responsibility over broker-dealers, to those firms having financial or operational problems.

Because broker-dealers are required to file pursuant to Rule 17a–11 only when certain specified events occur, it is difficult to develop a meaningful figure for the cost of compliance with Rule 17a–11. The Commission receives approximately 656 notices under this rule each year from approximately 362 broker-dealers. Each broker-dealer will spend approximately one hour per year complying with Rule 17a–11. Accordingly, the aggregate burden is estimated to be approximately 656 hours. With respect to those broker-dealers that must give notice under Rule 17a–11, the cost is approximately $10 per response for a total annual expense for all broker-dealers of $6,560.

Broker-dealers providing notice and reports under Rule 17a–11 are required to preserve such records under rule 17a–4 (17 CFR 240.17a–4) for a period of not less than three years, the first two years in an accessible place. Compliance with the Rule is mandatory. The Commission will generally not publish or make available to any person notice or reports received pursuant to Rule 17a–11. The Commission believes that information obtained under Rule 17a–11 relates to a condition report prepared for the use of the Commission, other federal governmental authorities, and securities industry self-regulatory organizations responsible for the regulation or supervision of financial institutions.

An agency may not conduct or sponsor, and a person is not required to respond to, a collection of information unless it displays a currently valid control number.

Written comments regarding the above information should be directed to the following persons: (i) Desk Officer for the Securities and Exchange Commission, Office of Information and Regulatory Affairs, Office of Management and Budget, Room 10202, New Executive Office Building, Washington, DC 20503; and (ii) Michael E. Bartell, Associate Executive Director, Office of Information Technology, Securities and Exchange Commission, 450 Fifth Street, NW, Washington, DC 20549. Comments must be submitted to OMB within 30 days of this notice.

Dated: June 7, 1999.

Margaret H. McFarland,

Deputy Secretary.

[FR Doc. 99–14988 Filed 6–11–99; 8:45 am]

BILLING CODE 8010–01–M

SECURITIES AND EXCHANGE COMMISSION

Issuer Delisting; Application To Withdraw From Listing and Registration; (The Midland Company, Common Stock, No Par Value Per Share) File No. 1–6026

June 7, 1999.

The Midland Company (''Company'') has filed an application with the Securities and Exchange Commission (''Commission''), pursuant to Section 12(d) of the Securities Exchange Act of 1934 (''Act'') and Rule 12d2–2(d) promulgated thereunder, to withdraw the security specified above (''Security'') from listing and registration on the American Stock Exchange LLC (''Amex or ''Exchange''.

The Security has been listed for trading on the Amex and became designated for quotation on the Nasdaq National Market (''Nasdaq'') on June 2, 1999.

The Company has complied with the rules of the Amex by filing with the Exchange a certified copy of the resolutions adopted by the Board of Directors of the Company authorizing the withdrawal of the Security from listing on the Amex and by setting forth in detail to the Exchange the reasons for such proposed withdrawal, and the facts in support thereof. In making the determination to withdraw the Security from listing on the Amex in conjunction with its designation for quotation on the Nasdaq, the Company sought to avoid the direct and indirect costs, as well as a division of the market for its Security, which would have resulted from the simultaneous trading of the Security on both the Amex and the Nasdaq.

The Amex has informed the Company that it will not interpose any objection to the Company's application to withdraw its Security from listing and registration on the Exchange.

The Company's application relates solely to the withdrawal from listing of the Company's Security on the Amex and shall have no effect upon the continued designation of the Security for quotation on the Nasdaq. By reason of Section 12(g) of the Act and the rules and regulations of the Commission thereunder, the Company shall continue to be obligated to file reports under Section 13 of the Act with the Commission.

Any interested person may, on or before June 28, 1999, submit by letter to the Secretary of the Securities and Exchange Commission, 450 Fifth Street, N.W., Washington, D.C. 20549–0609, facts bearing upon whether the application has been made in accordance with the rules of Exchange and what terms, if any, should be imposed by the Commission for the protection of investors. The Commission, based on the information submitted to it, will issue an order granting the application after the date mentioned above, unless the Commission determines to order a hearing on the matter.

For the Commission, by the Division of Market Regulation, pursuant to delegated authority.

Jonathan G. Katz,

Secretary.

[FR Doc. 99–14955 Filed 6–11–99; 8:45 am]

BILLING CODE 8010–01–M

SECURITIES AND EXCHANGE COMMISSION

[Release No. 34–41483)

Y2K EDGAR Testing for Filers

June 7, 1999.

The Securities and Exchange Commission has announced it will provide filers the opportunity to voluntarily test their systems' Y2K compliance by submitting test filings to the EDGAR test system.

When

We will make the EDGAR test system available for voluntary Y2K testing from July 12 through July 30, 1999. Starting at 8:00 a.m. Monday, July 12, we will set the EDGAR test system clock to February 21, 2000. The test will continue until the EDGAR test system clock reaches 10:00 p.m. March 10, 2000 on July 30, 1999.

During the test period, you may submit Y2K test filings from 8:00 a.m. until 10:00 p.m. on weekdays, although only limited filer support will be available after 7:00 p.m. The EDGAR test system will also be available from 9:00 a.m. until 5:30 p.m. on Saturdays and Sundays.

What To Test

We encourage filers who wish to perform Y2K testing to send any submission. We encourage filing agents and other large volume filers to choose a representative sampling of companies and submission types for Y2K testing. Since this test system has less capacity than the production system, we ask filers to consider limiting multiple tests, particularly on or about test-day February 29, 2000 (Tuesday, July 20, 1999).

Where To Submit

Submit Y2K test filings to the EDGAR test system. We will publish the telephone number for the test system on our web site (<*http://www.sec.gov*>, under Current News) no later than June 15, 1999, but please remember this telephone number will only be active during the test filing period. You must change both the primary number and the secondary number in your EDGARLink software package to this telephone number to successfully connect to the EDGAR test system. If you do not change both numbers, you may connect to the live production system and not the Y2K test environment. The live production system will not be prepared to accept Y2K test files or to limit dissemination of filings submitted.

Include a Test Tag

You must include in the submission header of each Y2K test submission a <TEST> tag OR specify that the submission is a TEST from the EDGARLink main menu or the dial up interface. Including the <TEST> tag will ensure that your Y2K test submission is not disseminated in the event that you incorrectly submit it to the operational EDGAR system.

We will deem all live submissions sent to the test site as test submissions, and we will discard them. Filings sent to EDGAR test system will not be disseminated.

Messages

Once the EDGAR test system receives your Y2K test submission, EDGAR will send you an acceptance or suspension message through CompuServe or the Internet. All messages from the EDGAR test system will state that the filing was a Y2K test filing.

Modules/Segments

If you want to reference a module or segment in your Y2K test filing, you must submit the module or segment to the EDGAR test system as a LIVE submission. However, you will not be able to refer to modules and segments sent to the EDGAR test system later in live filings on the production system.

Fee Payments

No fees are required for EDGAR Y2K Test Filings, nor will the testing include fee payment, processing, and posting. All test filings or form types ordinarily requiring fees will assume the fee has been paid. Filers and their banks are responsible for assuring that they have a Y2K compliant means of transferring money for payment of SEC filing fees.

For Help

EDGAR filer support staff will be available to assist you with EDGAR Y2K issues. Contact EDGAR Filer Support at (202) 942–8900 and select Y2K assistance from the telephone menu.

Margaret H. McFarland,

Deputy Secretary.

[FR Doc. 99–14954 Filed 6–11–99; 8:45 am]

BILLING CODE 8010–01–M

SECURITIES AND EXCHANGE COMMISSION

[Release No. 34–41488; File No. SR–AMEX–98–42]

Self-Regulatory Organizations; American Stock Exchange LLC; Notice of Filing and Order Granting Accelerated Approval of a Proposed Rule Change Regarding the Confirmation and Affirmation of Securities Transactions

Pursuant to Section 19(b)(1) of the Securities Exchange Act of 1934 (''Act''),[1] notice is hereby given that on October 27, 1998, the American Stock Exchange, Inc. (''AMEX'') filed with the Securities and Exchange Commission (''Commission'') and on may 21, 1999, amended the proposed rule change as described in Items I and II below, which items have been prepared primarily by AMEX.[2] The Commission is publishing this notice and order to solicit comments from interested persons and to grant accelerated approval of the proposal.

I. Self-Regulatory Organization's Statement of the Terms of Substance of the Proposed Rule Change

Under the rule change, AMEX will amend Rule 423 to permit electronic confirmation/affirmation of depository eligible COD transactions[3] by a qualified vendor or by an entity that has obtained an exemption from registration as a clearing agency.[4]

II. Self-Regulatory Organization's Statement of the Purpose of, and Statutory Basis for, the Proposed Rule Change

In its filing with the Commission, AMEX included statements concerning the purpose of and basis for the proposed rule change and discussed any comments it received on the proposed rule change. The text of these statements may be examined at the places specified in Item IV below. AMEX has prepared summaries, set forth in sections (A), (B), and (C) below, of the most significant aspects of such statements.

[1] 15 U.S.C. 78s(b)(1).

[2] Since the filing of the proposed rule change, AMEX has merged with the National Association of Securities Dealers and as a result has changed its full name from American Stock Exchange, Inc. to American Stock Exchange LLC.

[3] COD transaction are those in which a member firm extends receipt versus payment or delivery versus payment privileges to a customer.

[4] The text of the amendments is attached as Exhibit A to this notice.

(A) Self-Regulatory Organization's Statement of the Purpose of, and Statutory Basis for, the Proposed Rule Change

AMEX Rule 423 (''COC Orders'') currently requires that the facilities of a Commission registered clearing agency be used by AMEX member organizations for the confirmation, affirmation, and book-entry settlement of COD transactions in depository eligible securities. Certain vendors of electronic trade confirmation (''ETC'') services have requested that they be allowed to provide confirmation/affirmation services for institutional trades (*i.e.*, COD transaction) even though they are not registered clearing agencies. Under the proposed rule change, AMEX will amend Rule 423 to allow its broker-dealer members to use a qualified vendor for the confirmation and affirmation of institutional trades. In addition, Rule 423 is being amended to allow AMEX's broker-dealer members to use the confirmation/affirmation services of any entity that has obtained an exemption from registration as a clearing agency specifically so that it can provide confirmation/affirmation services for institutional trades.

In order to become a qualified vendor under the rule change, and ETC vendor will be required to certify to its customers that:

(1) With respect to its electronic trade confirmation/affirmation system, it has a capacity requirements, evaluation, and monitoring process that allows it to formulate current and anticipated estimated capacity requirements;

(2) Its electronic trade confirmation/affirmation system has sufficient capacity to process the specified volume of data that it reasonably anticipates to be entered into its electronic trade confirmation/affirmation service during the upcoming year;

(3) Its electronic trade confirmation/affirmation system has formal contingency procedures, the entity has followed a formal process of reviewing the likelihood of contingency occurrences, and the contingency protocols are reviewed and updated on a regular basis;

(4) Its electronic trade confirmation/affirmation system has a process for preventing, detecting, and controlling any potential or actual systems integrity failures and its procedures designed to protect against security breaches are followed; and

(5) Its current assets exceed its current liabilities by at least $500,000.

In addition, a qualified vendor will be required initially and annually to submit to AMEX and to the Commission staff a report prepared by independent audit personnel (referred to in the rule change as ''Auditor's Report''). Each Auditor's Report must: (1) verify the certifications described above; (2) contain a risk analysis of all of the entity's information technology systems; and (3) contain the written response of the entity's management to the Auditor's Report's verifications and risk analysis. The Auditor's Report must be deemed not unacceptable by Commission staff.[5]

Qualified vendors will be subject to ongoing requirements under the rule change. For each transaction in which it provides confirmation/affirmation services, a qualified vendor will be required to: (1) Deliver a trade record to a registered clearing agency in the clearing agency's format; (2) obtain a control number for the trade record from the clearing agency; (3) cross reference the control number to the confirmation and subsequent affirmation of the trade; and (4) include the control number when delivering the affirmation of the trade to the clearing agency. A qualified vendor will be required to notify AMEX and the Commission staff in writing of any changes to its systems that significantly affect or have the potential to significantly affect its electronic trade confirmation/affirmation system. In addition, a qualified vendor will be required to supply supplemental information regarding its confirmation/affirmation system as requested by AMEX or by the Commission staff. If a qualified vendor intends to cease providing confirmation/affirmation services as requested by AMEX or by the Commission staff. If a qualified vendor intends to cease providing confirmation/affirmation services, it must notify AMEX and the Commission staff in writing.

The Municipal Securities Rulemaking Board (''MSRB''), the National Association of Securities Dealers (''NASD''), and the New York Stock Exchange (''NYSE'') have made amendments to their rules similar to those being proposed here by AMEX.[6] The proposed Rule 423 amendments are responsive to the Commission staff's request that the self-regulatory organizations have uniform rules with respect to qualified vendors providing confirmation/affirmation services.

(2) Statutory Basis

AMEX believes that the proposed rule change is consistent with Section 6(b) of the Act[7] in general and furthers the objectives of Section 6(b)(5) in particular in that it is designed to foster cooperation and coordination with persons engaged in regulating, clearing, settling, processing information with respect to, and facilitating transactions in securities.

(B) Self-Regulatory Organization's Statement on Burden on Competition

AMEX believes that the proposed rule change will impose no burden on competition.

(C) Self-Regulatory Organization's Statement on Comments on the Proposed Rule Change Received From Members, Participants or Others

No written comments were solicited or received with respect to the proposed rule change.

III. Date of Effectiveness of the Proposed Rule Change and Timing for Commission Action

Section 6(b)(5) of the Act[8] requires, among other things, that AMEX's rules be designed to foster cooperation and coordination with persons engaged in regulating, clearing, settling, processing information with respect to, and facilitating transactions in securities. In addition, Section 6(b)(8) of the Act[9] requires that AMEX's rules not impose any burden on competition not necessary or appropriate in furtherance of the purposes of the Act. The Commission believes that AMEX's proposed rule change is consistent with its obligations under the Act because it will require unregulated entities that wish to provide confirmation/affirmation services to establish links and interfaces with a registered clearing agency. This requirement should increase cooperation and coordination among AMEX's members, registered clearing agencies, and entities that become qualified vendors under the rule change.

In addition, in reviewing the proposed rule change the Commission has considered whether the proposed rule change would impose any burden on competition that is not necessary or appropriate in furtherance of the purposes of the Act. The Commission believes that the rule change has been carefully designed to allow unregistered ETC vendors to provide confirmation/affirmation services for institutional

[5] At this time, the Commission staff intends to indicate that an entity's initial Auditor's Report is not unacceptable by issuing a letter to the entity stating that it will not recommend enforcement action against any of AMEX's member organizations that elect to use the confirmation/affirmation systems of the entity. Subsequent Auditor's Reports submitted to the Commission staff by the qualified vendor will be considered acceptable unless the Commission staff otherwise informs the qualified vendor.

[6] Securities Exchange Act Release No. 41378 (May 7, 1999), 64 FR 25940 [File Nos. SR–MSRB–98–06, SR–NASD–98–20, SR–NYSE–98–07 (order approving proposed rule changes).

[7] 15 U.S.C. 78f.

[8] 15 U.S.C. 78f(b)(5).

[9] 15 U.S.C. 78f(b)(8).

trades in a manner which is not unduly burdensome for ETC vendors and which preserves the safety and soundness of the national system for the clearance and settlement of securities transactions. Therefore, the Commission believes that AMEX's proposed rule change should not impose any burden on competition that is not necessary or appropriate in furtherance of the purposes of the Act.

The Commission finds good cause for approving the proposed rule change prior to the thirtieth day after the publication of notice of the filing. Approving prior to the thirtieth day after publication of notice will allow AMEX to immediately conform its Rule 423 to the recently amended confirmation/affirmation rules of the MSRB, NASD, and NYSE.[10]

IV. Solicitation of Comments

Interested persons are invited to submit written data, views, and arguments concerning the foregoing, including whether the proposed rule change is consistent with the Act. Persons making written submissions should file six copies thereof with the Secretary, Securities and Exchange Commission, 450 Fifth Street, N.W., Washington, D.C. 20549–0609. Copies of the submission, all subsequent amendments, all written statements with respect to the proposed rule change that are filed with the Commission, and all written communications relating to the proposed rule change between the Commission and any person, other than those that may be withheld from the public in accordance with the provisions of 5 U.S.C. 552, will be available for inspection and copying in the Commission's Public Reference Section, 450 Fifth Street, N.W., Washington, D.C. 20549. Copies of such filing also will be available for inspection and copying at the principal office of AMEX. All submissions should refer to File No. SR–AMEX–98–42 and should be submitted by July 6, 1999.

It is therefore ordered, pursuant to Section 19(b)(2) of the Act,[11] that the proposed rule change (File No. SR–AMEX–98–42) be and hereby is approved.

For the Commission by the Division of Market Regulation, pursuant to delegated authority.[12]

Margaret H. McFarland,

Deputy Secretary.

Exhibit A

Proposed Amendments to Rule 423

Additions *Italicized*
Deletions [bracketed]

COD Orders

Rule 423. No member or member organization shall accept an order from a customer pursuant to an arrangement whereby payment for securities purchased is to be made to the member or member organization upon delivery of the securities to an agent of the customer, or whereby payment for securities sold is to be made by the member or member organization to an agent of the customer upon receipt of the securities from such agent, unless all of the following procedures are followed:

(1) through (4) No change.

[(5) The customer or its agent shall utilize the facilities of a securities depository for the confirmation, acknowledgment and book entry settlement of all depository eligible transactions.]

(5) The facilities of a Clearing Agency shall be utilized for the book-entry settlement of all depository eligible transactions. The facilities of either a Clearing Agency or a Qualified Vendor shall be utilized for the electronic conformation and affirmation of all depository eligible transactions.

Commentary

.01 through .03 No change.

[.04 The following transactions shall be exempt from the provisions of paragraph (5) of this Rule:

(1) Transactions that are to be settled outside of the United States.

(2) Transactions wherein both a member organization and its agent are not participants in a securities depository.

(3) Transactions wherein both a customer and its agent are not participants in a securities depository.]

.04 Transactions that are to be settled outside of the United States shall be exempt from the provisions of paragraph (5) of this rule.

.05 No Change.

.06 For the purposes of this rule, a [''securities depository''] *''Clearing Agency''* shall mean a Clearing Agency as defined in Section 3(a)(23) of the Securities Exchange Act of 1934, that is registered with the Securities and Exchange Commission (*''Commission''*) pursuant to Section 17A(b)(2) of the Act *or has obtained from the Commission and exemption from registration granted specifically to allow the Clearing Agency to provide confirmation and affirmation services.*

07. For the purposes of this rule, ''depository eligible transactions'' shall mean transactions in those securities for which confirmation, [acknowledgment] *affirmation,* and book-entry settlement can be performed through the facilities of a [securities depository] *Clearing Agency* as defined in Commentary .06 of this rule.

[.08 Rule 423(5) and Commentary .04, .05, .06, and .07 shall become effective January 1, 1983.]

.08 ''Qualified Vendor'' shall mean a vendor of electronic confirmation and affirmation services that:

(A) shall, for each transaction subject to this rule; (i) deliver a trade record to a Clearing Agency in the Clearing Agency's format; (ii) obtain a control number for the trade record from the Clearing Agency; (iii) cross-reference the control number to the confirmation and subsequent affirmation of the trade; and (iv) include the control number when delivering the affirmation of the trade to the Clearing Agency;

(B) certifies to its customers: (i) with respect to its electronic trade confirmation/affirmation system, that it has a capacity requirements, evaluation, and monitoring process that allows the vendor to formulate current and anticipated estimated capacity requirements; (ii) that its electronic trade confirmation/affirmation system has sufficient capacity to process the specified volume of data that it reasonably anticipates to be entered into its electronic trade confirmation/affirmation service during the upcoming year; (iii) that is electronic trade confirmation/affirmation system has formal contingency procedures, that the entity has followed a formal process of reviewing the likelihood of contingency occurrences, and that the contingency protocols are reviewed and updated on a regular basis; (iv) that its electronic trade confirmation/affirmation system has a process for preventing, detecting, and controlling any potential or actual systems integrity failures, and its procedures designed to protect against security breaches are followed; and (v) that its current assets exceed its current liabilities by the lease five hundred thousand dollars;

(C) has submitted, and shall continue to submit on an annual basis, an Auditor's Report to the Commission staff which is not deemed unacceptable by the Commission staff. An Auditor's Report will be deemed unacceptable if it contains any findings of material weakness;

(D) notifies the Commission staff immediately in writing of any changes to its systems that significantly affect or have the potential to significantly affect its electronic trade confirmation/affirmation systems including, without limitation, changes that: (i) affect or potentially affect the capacity or security of its electronic trade confirmation/affirmation system; (ii) rely on new or substantially different technology; or (iii) provide a new service to the Qualified Vendor's electronic trade confirmation/affirmation system;

(E) immediately notified the Commission staff in writing if it intends to cease providing services;

(F) provides the Exchange with copies of any submissions to the Commission staff made pursuant to .08 (B), (C), (D) and (E) of this rule within ten business days; and

(G) supplies supplemental information regarding their electronic trade confirmation/

[10] *Supra* note 4.

[11] 15 U.S.C. 78s(b)(2).

[12] 17 CFR. 200.30–3(a)(12).

affirmation services as requested by the Exchange or the Commission staff.

.09 ''Auditor's Report'' shall mean a written report which is prepared by competent, independent, external audit personnel in accordance with the standards of the American Institute of Certified Public Accountants and the Information Systems Audit and Control Association and which (i) verifies the certifications contained in .08(B) above; (ii) contains a risk analysis of all aspects of the entity's information technology systems including, without limitation, computer operations, telecommunications, data security, systems development, capacity planning and testing, and contingency planning and testing; and (iii) contains the written response of the entity's management to the information provided pursuant to (i) and (ii) above.

[FR Doc. 99–14990 Filed 6–11–99; 8:45 am]

BILLING CODE 8010–01–M

SECURITIES AND EXCHANGE COMMISSION

[Release No. 34–41486; SR–OCC–99–01]

Self-Regulatory Organizations; The Options Clearing Corporation; Notice of Filing of Proposed Rule Change Relating to Acceptance of Letters of Credit for Margin Purposes

June 7, 1999.

Pursuant to section 19(b)(1) of the Securities Exchange Act of 1934 (''Act''),[1] notice is hereby given that on January 22, 1999, The Options Clearing Corporation (''OCC'') filed with the Securities and Exchange Commission (''Commission'') the proposed rule change as described in Items I, II, and III below, which items have been prepared primarily by OCC. The Commission is publishing this notice to solicit comments from interested persons on the proposed rule change.

I. Self-Regulatory Organization's Statement of the Terms of Substance of the Proposed Rule Change

The proposed rule change will modify OCC's rules with respect to letters of credit accepted for margin purposes.

II. Self-Regulatory Organization's Statement of the Purpose of, and Statutory Basis for, the Proposed Rule Change

In its filing with the Commission, OCC included statements concerning the purpose of and basis for the proposed rule change and discussed any comments it received on the proposed rule change. The text of these statements may be examined at the places specified in Item IV below. OCC has prepared summaries, set forth in sections (A), (B), and (C) below, of the most significant aspects of such statements.[2]

(A) Self-Regulatory Organization's Statement of the Purpose of, and Statutory Basis for, the Proposed Rule Change

The proposed rule change will conform OCC's Rule 604(c) to the terms of the Uniform Letter of Credit (''ULC'') created by the Unified Clearing Group (''UCG''). The UCG is an organization composed of all major securities and futures clearing organizations and depositories in the United States.[3] The ULC was developed to foster uniformity among the various U.S. securities and futures clearing organizations with respect to the acceptable terms of letters of credit that are deposited as margin.[4] All UCG member that accept letters of credit as margin are expected to use the ULC and to convert to the ULC during calendar year 1999.

Under the terms of the ULC, clearing corporations can continue to present a demand for payment by hand delivery and/or SWIFT message.[5] The ULC also permits a demand for payment by facsimile transmission. However, unlike the current letters of credit accepted by OCC, the ULC does not permit a demand by tested telex.

The rule change proposes to make several amendments to Rule 604(c). First, it will require the issuing bank to make payment against the letter of credit within sixty minutes of presentment for payment if the demand is made by a preset cutoff time on a business day, which OCC specifies in its rules as 3:00 p.m. Central Time. Demands submitted to the bank after the cut-off time or on a day when the bank is closed must be honored within sixty minutes of the opening of business on the next business day. Certain exceptions will be made in the case of foreign currency letters of credit.

Second, the rule change will permit OCC flexibility in specifying acceptable expiration dates for letters of credit. Currently OCC requires that a letter expire no later than the first day of the next calendar quarter but is considering permitting letters of credit to be issued with expiration dates more than one calendar quarter in the future. In order to simplify recordkeeping, OCC presently anticipates that it will continue to require the replacement of outstanding letters of credit with newly issued letters of credit on an annual basis.

Third, the rule change will eliminate provisions that permit a clearing member to issue instructions to OCC that restrict a previously unrestricted letter of credit or a portion thereof to serve as margin only for the clearing member's customers' accounts. These provisions have generally not been used, and clearing members who need to restrict letters of credit to the customers' accounts for regulatory compliance purposes may do so by placing such restriction on the letter itself. OCC believes that a restriction on the face of the letter will provide better notice of the restriction and should reduce the likelihood of confusion over which letters are intended to be restricted and which are not.

Finally, the proposed rule deletes the final sentence of Rule 604(c), which allows members to deposit letters of credit denominated in any foreign currency that is a trading currency, because it is unnecessary in light of other provisions proposed for Rule 604 that specify letters of credit may be denominated in any currency approved by OCC for that purpose.

OCC believes that the proposed rule change is consistent with the requirements of Section 17A of the Act and the rules and regulations thereunder because, among other things, it will promote the prompt and accurate clearance and settlement of transactions in securities by requiring issuing banks to make payment against letters of credit within sixty minutes of a demand for payment rather than by the close of the third banking day following presentation of a demand for payment as is presently the case.

(B) Self-Regulatory Organization's Statement on Burden on Completion

OCC does not believe that the proposed rule change will impose any burden on competition.

[1] 15 U.S.C. 78s(b)(1).

[2] The Commission has modified the text of the summaries prepared by OCC.

[3] The members of the UCG include the Boston Stock Exchange Clearing Corporation, The Depository Trust Company, Government Securities Clearing Corporation, MBS Clearing Corporation, National Securities Clearing Corporation, OCC, Board of Trade Clearing Corporation, Chicago Mercantile Exchange, Clearing Corporation of New York, Kansas City Board of Trade, Minneapolis Grain Exchange, New York Mercantile Exchange, Emerging Markets Clearing Corporation, and Clearing Corporation for Options and Securities.

[4] In developing the ULC, UCG consulted with several letter of credit issuing banks and the National Standby Letter of Credit Committee of the International Financial Service Association (formerly known as the U.S. Council on International Banking). In addition, various regulatory agencies, including the staffs of the Securities and Exchange Commission, the Commodity Futures Trading Commission, and Board of Governors of the Federal Reserve System attended the UCG meetings where the ULC was discussed.

[5] SWIFT messages are secured, electronic transmissions.

(C) Self-Regulatory Organization's Statement on Comments on the Proposed Rule Change Received From Members, Participants or Others

No comments on the proposed rule change were solicited or received. OCC will notify the Commission of any written comments it receives.

III. Date of Effectiveness of the Proposed Rule Change and Timing for Commission Action

Within thirty-five days of the date of publication of this notice in the **Federal Register** or within such longer period (i) as the Commission may designate up to ninety days of such date if it finds such longer period to be appropriate and publishes its reasons for so finding or (ii) as to which the self-regulatory organization consents, the Commission will:

(a) By order approve the proposed rule change or

(b) Institute proceedings to determine whether the proposed rule change should be disapproved.

IV. Solicitation of Comments

Interested persons are invited to submit written data, views, and arguments concerning the foregoing, including whether the proposed rule change is consistent with the Act. Persons making written submissions should file six copies thereof with the Secretary, Securities and Exchange Commission, 450 Fifth Street, N.W., Washington, D.C. 20549–0609. Copies of the submission, all subsequent amendments, all written statements with respect to the proposed rule change that are filed with the Commission, and all written communications relating to the proposed rule change between the Commission and any person, other than those that may be withheld from the public in accordance with the provisions of 5 U.S.C. 552, will be available for inspection and copying in the Commission's Public Reference Section, 450 Fifth Street, N.W., Washington, D.C. 20549. Copies of such filing also will be available for inspection and copying at the principal office of OCC. All submissions should refer to File No. SR–OCC–99–01 and should be submitted by July 6, 1999.

For the Commission by the Division of Market Regulation, pursuant to delegated authority.[6]

Margaret H. McFarland,

Deputy Secretary.

[FR Doc. 99–14991 Filed 6–11–99; 8:45 am]

BILLING CODE 8010–01–M

[6] 17 CFR 200.30–3(a)(12).

SECURITIES AND EXCHANGE COMMISSION

[Release No. 34–41487; File No. SR–PCX–98–35)

Self-Regulatory Organizations; Pacific Exchange, Inc.; Notice of Filing and Order Granting Accelerated Approval of a Proposed Rule Change Regarding the Confirmation and Affirmation of Securities Transactions

June 7, 1999.

Pursuant to Section 19(b)(1) of the Securities Exchange Act of 1934 (''Act''),[1] notice is hereby given that on June 30, 1998, the Pacific Exchange, Inc. (''PCX'') filed with the Securities and Exchange Commission (''Commission'') and on November 16, 1998, and May 28, 1999, amended the proposed rule change as described in Items I and II below, which items have been prepared primarily by PCX. The Commission is publishing this notice and order to solicit comments from interested persons and to grant accelerated approval of the proposed rule change.

I. Self-Regulatory Organization's Statement of the Terms of Substance of the Proposed Rule Change

The proposed rule change will permit PCX members to use the facilities of a qualified vendor or an entity that has obtained an exemption from registration as a clearing agency for the electronic confirmation and affirmation of depository eligible transactions.[2]

II. Self-Regulatory Organization's Statement of the Purpose of, and Statutory Basis for, the Proposed Rule Change

In its filing with the Commission, PCX included statements concerning the purpose of and basis for the proposed rule change and discussed any comments it received on the proposed rule change. The text of these statements may be examined at the places specified in Item IV below. PCX has prepared summaries, set forth in sections (A), (B), and (C) below, of the most significant aspects of such statements.

(A) Self-Regulatory Organization's Statement of the Purpose of, and Statutory Basis for, the Proposed Rule Change

The PCX is proposing to amend Rule 9.12 to allow qualified vendors of electronic trade confirmation (''FTC'') services that are not registered clearing agencies to provide electronic trade confirmation/affirmation services for institutional trades. The rule is also being amended to allow entities that have obtained exemptions from clearing agency registration specifically so that they can offer confirmation/affirmation services to provide such services for institutional trade.

Rule 9.12 was originally adopted to protect broker-dealers form problems relating to financial exposure associated with inaccurate and filed institutional transactions. Financial exposure results from institutional customers that settle their trades on a receipt versus payment (''RVP'') or delivery versus payment (''DVP'') basis. This permits them to delay payment for securities until the securities are delivered to their custodian and to delay delivery of securities until payment is received. Additional financial exposure results when the broker-dealer sells or purchases securities on behalf of an institutional customer from another broker-dealer. In such a situation the broker-dealer is subject to financial exposure until the institution's custodian delivers securities or makes payment that the borker-dealer will use to cover its trade with the other broker-dealer. If ther is a delay in settlement with the institution or the institution refuses to recognize and settle the trade, the broker-dealer is still obligated to settle its trade with the other broker-dealer.

Certain vendors of ETC services have requested that they be allowed to provide confirmation/affirmation services for institutional trades even though they are not registered clearing agencies. PCX is proposing to amend Rule 9.12 so that either a clearing agency[3] or a qualified vendor may provide electronic conformation and affirmation of all depository eligible transactions to be settled on an RVP/DVP basis. In order to become a qualified vendor under the rule change, an ETC vendor will be required to certify to its customers that:

(1) With respect to its electronic trade confirmation/affirmation system, it has a capacity requirements, evaluation, and monitoring process that allows it to formulate current and anticipated estimated capacity requirements;

(2) Its electronic trade conformation/affirmation system has sufficient capacity to process the specified volume of data that it reasonably anticipates to be entered into its

[1] 15 U.S.C. 78s(b)(1).

[2] The text of the amendments is attached as Exhibit A to this notice.

[3] For purposes of Rule 9.12, clearing agency means a clearing agency as defined in Section 3(a)(23) of the Act that is registered with the Commission or that has obtained from the Commission an exemption from registration granted specifically to allow the clearing agency to provide confirmation/affirmation services.

electronic trade confirmation/affirmation service during the upcoming year;

(3) Its electronic trade confirmation/affirmation system has formal contingency procedures, the entity has followed a formal process of reviewing the likelihood of contingency occurrences, and the contingency protocols are reviewed and updated on a regular basis:

(4) Its electronic trade confirmation/affirmation system has a process for preventing, detecting, and controlling any potential or actual systems integrity failures and its procedures designed to protect against security breaches are followed; and

(5) Its current assets exceed its current liabilities by at least $500,000.

In addition, a qualified vendor will be required initially and annually to submit to PCX and to the Commission staff a report prepared by independent audit personnel (referred to in the rule change as ''Auditor's Report''). Each Auditor's Report must: (1) verify the certifications described above; (2) contain a risk analysis of all of the entity's information technology systems; and (3) contain the written response of the entity's management to the Auditor's Report's verifications and risk analysis. The Auditor's Report must be deemed not unacceptable by Commission staff.[4]

Qualified vendors will be subject to ongoing requirements under the rule change. For each transaction in which it provides confirmation/affirmation services, a qualified vendor will be required to: (1) deliver a trade record to a registered clearing agency in the clearing agency's format; (2) obtain a control number for the trade record from the clearing agency; (3) cross reference the control number to the confirmation and subsequent affirmation of the trade; and (4) include the control number when delivering the affirmation of the trade to the clearing agency. A qualified vendor will be required to notify the PCX and the Commission staff in writing of any changes to its systems that significantly affect or have the potential to significantly affect its electronic trade confirmation/affirmation system. In addition, a qualified vendor will be required to supply supplemental information regarding its confirmation/affirmation system as requested by PCX or by the Commission staff. If a qualified vendor intends to cease providing confirmation/affirmation services, it must notify PCX and the Commission staff in writing.

PCX believes that the proposal is consistent with Section 6(b) of the Act[5] in general and with Section 6(b)(5) of the Act[6] in particular in that it is designed to promote just and equitable principles of trade, to foster cooperation and coordination with persons engaged in regulating, clearing, settling, processing information with respect to, and facilitating transactions in securities, and to protest investors and the public interest.

(B) Self-Regulatory Organization's Statement on Burden on Competition

The PCX does not believe that the proposed rule change will impose any burden on competition that is not necessary or appropriate in furtherance of the purposes of the Act.

(C) Self-Regulatory Organization's Statement on Comments on the Proposed Rule Change Received From Members, Participants or Others

Written comments on the proposed rule change were neither solicited nor received.

III. Date of Effectiveness of the Proposed Rule Change and Timing for Commission Action

Section 6(b)(5) of the Act[7] requires, among other things, that PCX's rules be designed to foster cooperation and coordination with persons engaged in regulating, clearing, settling, processing information with respect to, and facilitating transactions in securities. In addition, Section 6(b)(8) of the Act[8] requires that PCX's rules not impose any burden on competition not necessary or appropriate in furtherance of the purposes of the Act. The Commission believes that PCX's proposed rule change is consistent with its obligations under the Act because it will require unregulated entities that wish to provide confirmation/affirmation services to establish links and interfaces with a registered clearing agency. This requirement should increase cooperation and coordination among PCX's members, registered clearing agencies, and entities that become qualified vendors under the rule change.

In addition, in reviewing the proposed rule change the Commission has considered whether the proposed rule change would impose any burden on competition that is not necessary or appropriate in furtherance of the purposes of the Act. The Commission believes that the rule change has been carefully designed to allow unregistered ETC vendors to provide confirmation/affirmation services for institutional trades in a manner which is not unduly burdensome for ETC vendors and which preserves the safety and soundness of the national system for the clearance and settlement of securities transactions. Therefore, the Commission believes that PCX's proposed rule change should not impose any burden on competition that is not necessary or appropriate in furtherance of the purposes of the Act.

The Commission finds good cause for approving the proposed rule change prior to the thirtieth day after the publication of notice of the filing. Approving prior to the thirtieth day after publication of notice will allow PCX to immediately conform its Rule 9.12 to the recently amended confirmation/affirmation rules of the Municipal Securities Rulemaking Board (''MSRB''), National Association of Securities Dealers (''NASD''), and New York Stock Exchange (''NYSE'').[9]

IV. Solicitation of Comments

Interested persons are invited to submit written data, views, and arguments concerning the foregoing, including whether the proposed rule change is consistent with the Act. Persons making written submissions should file six copies thereof with the Secretary, Securities and Exchange Commission, 450 Fifth Street, N.W., Washington, D.C. 20549–0609. Copies of the submission, all subsequent amendments, all written statements with respect to the proposed rule change that are filed with the Commission, and all written communications relating to the proposed rule change between the Commission and any person, other than those that may be withheld from the public in accordance with the provisions of 5 U.S.C. 552, will be available for inspection and copying in the Commission's Public Reference Section, 450 Fifth Street, N.W., Washington, D.C. 20549. Copies of such filing also will be available for inspection and copying at the principal office of PCX. All submissions should refer to File No. SR–PCX–98–35 and should be submitted by July 6, 1999.

[4] At this time, the Commission staff intends to indicate that an entity's initial Auditor's Report is not unacceptable by issuing a letter to the entity stating that it will not recommend enforcement action against any of PCX's member organizations that elect to use the confirmation/affirmation systems of the entity. Subsequent Auditor's Reports submitted to the Commission staff by the qualified vendor will be considered acceptable unless the Commission staff otherwise informs the qualified vendor.

[5] 15 U.S.C. 78f.

[6] 15 U.S.C. 78f(b)(5).

[7] 15 U.S.C. 78f(b)(5).

[8] 15 U.S.C. 78f(b)(8).

[9] Securities Exchange Act Release No. 41378 (May 7, 1999), 64 FR 25940 [File Nos. SR–MSRB–98–06, SR–NASD–98–20, SR–NYSE–98–07.

It is therefore ordered, pursuant to Section 19(b)(2) of the Act,[10] that the proposed rule change (File No. SR–PCX–98–35) be and hereby is approved.

For the Commission by the Division of Market Regulation, pursuant to delegated authority.[11]

Margaret H. McFarland,

Deputy Secretary.

Exhibit A

Additions *italicized*
Deletions [bracketed]

Text of the Proposed Rule Change: COD Orders—Partial Delivery

Rule 9.12*(a)*(1)–(3) No change.

(4) No change.

(A)–(B)(i)–(ii) No change.

(5) [The customer or its agent shall utilize the facilities of a securities depository for the confirmation, acknowledgement, and book entry settlement of all depository eligible transactions.] *The facilities of a Clearing Agency must be utilized for the book-entry settlement of all Depository Eligible Transactions except for transactions that are to be settled outside the United States. The facilities of either a Clearing Agency or a Qualified Vendor must be utilized for the electronic confirmation and affirmation of all Depository Eligible Transaction.*

(A) For the purpose of this rule, ''securities depository'' [shall] means a clearing agency as defined in Section 3(a)(23) of the Securities Exchange Act of 1934 that is registered with the Securities and Exchange Commission pursuant to Section 17A(b)(2) of the Act.

(B) For the purpose of this rule ''depository eligible transactions'' [shall] means transactions in those securities for which confirmation, *affirmation* [acknowledgment] and book entry settlement can be performed through the facilities of a securities depository as defined in Rule 9.12(a)(5)(A).

(C) For the purpose of this rule ''Clearing Agency'' means a clearing agency as defined in Section 3(a)(23) of the Securities Exchange Act of 1934 that is registered with the Securities and Exchange Commission pursuant to Section 17A(b)(2) of the Act or that has obtained from the Commission an exemption from registration granted specifically to allow the clearing agency to provide confirmation/affirmation services.

(D) ''Qualified Vendor'' means a vendor of electronic confirmation and affirmation services that:

(i) will, for each transaction subject to this rule: (a) deliver a trade record to a Clearing Agency in the Clearing Agency's format; (b) obtain a control number for the trade record from the Clearing Agency; (c) cross-reference the control number to the confirmation and subsequent affirmation of the trade; and (d) include the control number when delivering the affirmation of the trade to the Clearing Agency;

(ii) certifies to its customers: (a) with respect to its electronic trade confirmation/affirmation system, that it has a capacity requirements, evaluation, and monitoring processes that allow the vendor to formulate current and anticipated estimated capacity requirements; (b) that its electronic trade confirmation/affirmation system has sufficient capacity to process the specified volume of data that it reasonably anticipates to be entered into its electronic trade confirmation/affirmation service during the upcoming year; (c) that its electronic trade confirmation/affirmation system has formal contingency procedures, that the entity has followed a formal process of reviewing the likelihood of contingency occurrences, and that the contingency protocols are reviewed and updated on a regular basis; (d) that its electronic trade confirmation/affirmation system has a process for preventing, detecting, and controlling any potential or actual systems integrity failures, and its procedures designed to protect against security breaches are followed; and (e) that its current assets exceed its current liabilities by at least five hundred thousand dollars;

(iii) has submitted and will continue to submit on an annual basis an Auditor's Report to the Exchange and to the Commission Staff which is not deemed unacceptable by the Commission Staff. An Auditor's Report will be deemed unacceptable if it contains any findings of material weakness;

(iv) notifies the Exchange and the Commission Staff immediately in writing of any changes to its systems that significantly affect or have the potential to significantly affect its electronic trade confirmation/affirmation systems including, without limitation, changes that: (a) affect or potentially affect the capacity or security of its electronic trade confirmation/affirmation system; (b) rely on new or substantially different technology; or (c) provide a new service to the Qualified Vendors' electronic trade confirmation/affirmation system;

(v) immediately notifies the Exchange and Commission Staff, in writing, if it intends to cease providing services;

(vi) provides the Exchange with copies of any submission to the Commission Staff made pursuant to Sections (a)(5)(D)(ii), (iii), (iv), or (v) of the Rule within ten business days; and

(vii) supplies supplemental information regarding their electronic trade confirmation/affirmation services as requested by the Exchange or the Commission.

(E) ''Auditor's Report'' means a written report that is prepared by competent, independent, external audit personnel in accordance with the standards of the American Institute of Certified Public Accountants and the Information Systems Audit and Control Association and that (i) verifies the certifications contained in subsection (a)(5)(D)(ii) above; (ii) contains a risk analysis of all aspects of the entity's information technology systems including, without limitation, computer operations, telecommunications, data security, systems development, capacity planning and testing, and contingency planning and testing; and (iii) contains the written response of the entity's management to the information provided pursuant to (i) and (ii) above.

Rule 9.12(b), No Change.

[FR Doc. 99–14989 Filed 6–11–99; 8:45 am]

BILLING CODE 8010–01–M

[10] 15 U.S.C. 78s(b)(2).

[11] 17 CFR 200.30–3(a)(12).

SMALL BUSINESS ADMINISTRATION

[Declaration of Disaster #3188]

State of Georgia

Fulton County and the contiguous counties of Carroll, Douglas, Cobb, Cherokee, Forsyth, Gwinnett, DeKalb, Clayton, Fayette and Coweta in the State of Georgia constitute a disaster area as a result of damages caused by an apartment complex fire that occurred on May 3, 1999. Applications for loans for physical damages may be filed until the close of business on August 2, 1999 and for economic injury until the close of business on March 3, 2000 at the address listed below or other locally announced locations:

U.S. Small Business Administration, Disaster Area 2 Office, One Baltimore Place, Suite 300, Atlanta, GA 30308

The interest rates are:

	Percent
For Physical Damage:	
HOMEOWNERS WITH CREDIT AVAILABLE ELSEWHERE	6.875
HOMEOWNERS WITHOUT CREDIT AVAILABLE ELSEWHERE	3.437
BUSINESSES WITH CREDIT AVAILABLE ELSEWHERE	8.000
BUSINESSES AND NON-PROFIT ORGANIZATIONS WITHOUT CREDIT AVAILABLE ELSEWHERE	4.000
OTHERS (INCLUDING NON-PROFIT ORGANIZATIONS) WITH CREDIT AVAILABLE ELSEWHERE	7.000
For Economic Injury:	
BUSINESSES AND SMALL AGRICULTURAL COOPERATIVES WITHOUT CREDIT AVAILABLE ELSEWHERE	4.000

The numbers assigned to this disaster are 318805 for physical damage and 9C9800 for economic injury.

(Catalog of Federal Domestic Assistance Program Nos. 59002 and 59008)

Dated: June 3, 1999.

Mary Kristine Swedin,

Acting Administrator.

[FR Doc. 99–14972 Filed 6–11–99; 8:45 am]

BILLING CODE 8025–01–U

SMALL BUSINESS ADMINISTRATION

[Declaration of Disaster #3187]

State of Illinois

As a result of the President's major disaster declaration on May 28, 1999, I find that Jo Daviess County in the State of Illinois constitutes a disaster area due to damages caused by severe storms and flash flooding that occurred on May 16–17, 1999. Applications for loans for physical damage as a result of this disaster may be filed until the close of business on July 26, 1999 and for economic injury until the close of business on February 28, 2000 at the address listed below or other locally announced locations:

U.S. Small Business Administration, Disaster Area 2 Office, One Baltimore Place, Suite 300, Atlanta, GA 30308

In addition, applications for economic injury loans from small businesses located in the following contiguous counties may be filed until the specified date at the above location: Carroll and Stephenson Counties in Illinois, and Grant and Lafayette Counties in Wisconsin. Any counties contiguous to the above-named primary county and not listed herein have been previously declared under a separate declaration for the same occurrence.

The interest rates are:

	Percent
For Physical Damage:	
HOMEOWNERS WITH CREDIT AVAILABLE ELSEWHERE	6.875
HOMEOWNERS WITHOUT CREDIT AVAILABLE ELSEWHERE	3.437
BUSINESSES WITH CREDIT AVAILABLE ELSEWHERE	8.000
BUSINESSES AND NON-PROFIT ORGANIZATIONS WITHOUT CREDIT AVAILABLE ELSEWHERE	4.000
OTHERS (INCLUDING NON-PROFIT ORGANIZATIONS) WITH CREDIT AVAILABLE ELSEWHERE	7.000
For Economic Injury:	
BUSINESSES AND SMALL AGRICULTURAL COOPERATIVES WITHOUT CREDIT AVAILABLE ELSEWHERE	4.000

The number assigned to this disaster for physical damage is 318706. For economic injury the numbers are 9C9600 for Illinois and 9C9700 for Wisconsin.

(Catalog of Federal Domestic Assistance Program Nos. 59002 and 59008)

Dated: June 4, 1999.

Bernard Kulik,

Associate Administrator for Disaster Assistance.

[FR Doc. 99–14973 Filed 6–11–99; 8:45 am]

BILLING CODE 8025–01–U

SMALL BUSINESS ADMINISTRATION

[Declaration of Disaster #3186]

State of Iowa (Amendment #1)

In accordance with information received from the Federal Emergency Management Agency dated May 29 and June 1, 1999, the above-numbered Declaration is hereby amended to include Butler, Clinton, and Crawford Counties in the State of Iowa as a disaster area as a result of damages caused by severe storms, flooding, and tornadoes. This Declaration is further amended to establish the incident period for this disaster as beginning on May 16 and continuing through May 29, 1999.

In addition, applications for economic injury loans from small businesses located in the following contiguous counties may be filed until the specified date at the previously designated location: Audubon, Carroll, Cerro Gordo, Franklin, Hardin, Ida, Sac, Scott, and Woodbury Counties in Iowa, and Whiteside County, Illinois. Any counties contiguous to the above-named primary counties and not listed herein have been previously declared.

All other information remains the same, i.e., the deadline for filing applications for physical damage is July 19, 1999, and for economic injury the deadline is February 22, 2000.

(Catalog of Federal Domestic Assistance Program Nos. 59002 and 59008)

Dated: June 4, 1999.

Bernard Kulik,

Associate Administrator for Disaster Assistance.

[FR Doc. 99–14974 Filed 6–11–99; 8:45 am]

BILLING CODE 8025–01–U

SMALL BUSINESS ADMINISTRATION

[Declaration of Disaster #3182]

State of Texas (Amendment #3)

In accordance with a notice received from the Federal Emergency Management Agency dated June 2, 1999, the above-numbered Declaration is hereby amended to include Gregg County, Texas as a disaster area as a result of damages caused by severe storms and tornadoes that occurred on May 4, 1999.

In addition, applications for economic injury loans from small businesses located in the contiguous counties of Harrison, Rusk, Smith, and Upshur in the State of Texas may be filed until the specified date at the previously designated location.

All other information remains the same, i.e., the deadline for filing applications for physical damage is July 4, 1999, and for economic injury the deadline is February 7, 2000.

(Catalog of Federal Domestic Assistance Program Nos. 59002 and 59008)

Dated: June 4, 1999.

Bernard Kulik,

Associate Administrator for Disaster Assistance.

[FR Doc. 99–14975 Filed 6–11–99; 8:45 am]

BILLING CODE 8025–01–U

SMALL BUSINESS ADMINISTRATION

Rocky Mountain States Regional Fairness Board Public Hearing

The U.S. Small Business Administration Rocky Mountain States Regional Fairness Board Strategy Meeting, to be held on August 4, 1999, starting at 12:30 pm at 123 West E Street Casper, WY 82601 to receive comments and testimony from small businesses and representatives of trade associations concerning regulatory enforcement or compliance taken by federal agencies. Transcripts of these proceedings will be posted on the Internet. These transcripts are subject only to limited review by the National Ombudsman.

For further information contact Gary P. Peele, telephone (312) 353–0880.

Andrew A. Rivera,

Deputy Director of External Affairs.

[FR Doc. 99–14976 Filed 6–11–99; 8:45 am]

BILLING CODE 8025–01–U

SMALL BUSINESS ADMINISTRATION

South Atlantic States Regional Fairness Board Public Hearing

The South Atlantic States Regional Fairness Board Public Hearing, to be held on August 19, 1999 starting at 9:30 a.m. at Duquesne Club 325 Sixth Avenue, Pittsburgh, PA 15222. To receive comments and testimony from small businesses and representatives of trade associations concerning regulatory enforcement or compliance taken by federal agencies. Transcripts of these proceedings will be posted on the Internet. These transcripts are subject only to limited review by the National Ombudsman.

For further information, contact Gary P. Peele, telephone (312) 353–0880.

Andrew A. Rivera,

Deputy Director of External Affairs.

[FR Doc. 99–14978 Filed 6–11–99; 8:45 am]

BILLING CODE 8025–01–U

SMALL BUSINESS ADMINISTRATION

Small Business Administration, Region IV, North Florida District, Jacksonville, Florida, Advisory Council Meeting; Public Meeting

The U. S. Small Business Administration, North Florida District Office, Jacksonville, Florida, Advisory Council will hold a public meeting from 12:00 p.m. to 2 p.m., July 15, 1999, at the NationsBank Tower, 50 N. Laura Street, 12th Floor, Large Conference Room, Jacksonville, Florida, to discuss such matters as may be presented by members, staff of the U. S. Small Business Administration, or others present.

For further information, write or call Claudia D. Taylor, U. S. Small Business Administration, 7825 Baymeadows Way, Suite 100–B, Jacksonville, Florida 32256–7504, telephone (904) 443–1933.

Andrew A. Rivera,

Deputy Director of External Affairs.

[FR Doc. 99–14977 Filed 6–11–99; 8:45 am]

BILLING CODE 8025–01–U

SMALL BUSINESS ADMINISTRATION

Wisconsin State Advisory Council Public Hearing

The U.S. Small Business Administration Wisconsin State Advisory Council, located in the geographical area of Milwaukee, Wisconsin, will hold a public meeting from 12:00 p.m. to 1:00 p.m. June 17, 1999 at Metro Milwaukee Area Chamber (MMAC) Association of Commerce Building; 756 North Milwaukee Street, Fourth Floor, Milwaukee, Wisconsin to discuss such matters as may be presented by members, staff of the U.S. Small Business Administration, or others present.

For further information, write or call Yolanda Lassiter, U.S. Small Business Administration, 310 West Wisconsin Avenue Milwaukee, Wisconsin 53203; Fax (414) 297–3928.

Andrew A. Rivera,

Deputy Director of External Affairs.

[FR Doc. 99–14979 Filed 6–11–99; 8:45 am]

BILLING CODE 8025–01–P

Corrections

Federal Register

Vol. 64, No. 113

Monday, June 14, 1999

This section of the FEDERAL REGISTER contains editorial corrections of previously published Presidential, Rule, Proposed Rule, and Notice documents. These corrections are prepared by the Office of the Federal Register. Agency prepared corrections are issued as signed documents and appear in the appropriate document categories elsewhere in the issue.

DEPARTMENT OF COMMERCE

National Oceanic and Atmospheric Administration

50 CFR Parts 600 and 660

[Docket No 981231333-9127-03; I.D. 122898E]

RIN 0648-AM12

Fisheries Off West Coast States and in the Western Pacific; Pacific Coast Groundfish Fishery; Final 1999 ABC, OY, and Tribal and Nontribal Allocations for Pacific Whiting

Correction

In rule document 99–13037, beginning on page 27928, in the issue of Monday, May 24, 1999, make the following correction:

On page 27933, in the first column, in the fifth line ''42″'' should read ''42°''.

[FR Doc. C9–13037 Filed 6–11–99; 8:45 am]

BILLING CODE 1505–01–D

FEDERAL MINE SAFETY AND HEALTH REVIEW COMMISSION

29 CFR Part 2704

Implementation of Amendments to the Equal Access to Justice Act in Commission Proceedings

Correction

In rule document 98–29680 beginning on page 63172 in the issue of Thursday, November 12, 1998, make the following correction:

On page 63176, second column, amendatory instruction six is corrected to read as follows:

''6. Section 2704.106(b) is revised to read as follows:''.

[FR Doc. C8–29680 Filed 6–11–99; 8:45 am]

BILLING CODE 1505–01–D

ENVIRONMENTAL PROTECTION AGENCY

40 CFR Part 63

[FRL-6344-7]

RIN 2060-AE-86

National Emission Standards for Hazardous Air Pollutants for Polyether Polyols Production

Correction

In rule document 99–12479, beginning on page 29420 in the issue of Tuesday, June 1, 1999, make the following corrections:

§ 63.1427 [Corrected]

On page 29457, in the second column, in § 63.1427(e)(2), Equation 11 should be set out before ''Where:'' as set forth below:

$$R_{batchcycle} = \left[1 - \frac{P_{epox,\,f}}{P_{epox,\,i}}\right] * 100 \qquad \text{[Equation 11]}$$

[FR Doc. C9–12479 Filed 6–11–99; 8:45 am]

BILLING CODE 1505–01–D

federal register

Monday
June 14, 1999

Part II

Environmental Protection Agency

40 CFR Part 63

National Emission Standards for Hazardous Air Pollutants for Source Categories; Portland Cement Manufacturing Industry; Final Rule

ENVIRONMENTAL PROTECTION AGENCY

40 CFR Part 63

[FRL–6347–2]

RIN 2060–AE78

National Emission Standards for Hazardous Air Pollutants for Source Categories; Portland Cement Manufacturing Industry

AGENCY: Environmental Protection Agency (EPA).

ACTION: Final rule.

SUMMARY: This action promulgates national emission standards for hazardous air pollutants (NESHAP) for new and existing sources in the portland cement manufacturing industry. This action also adds Method 320 for the measurement of vapor phase organic and inorganic emissions by extractive Fourier Transform Infrared (FTIR) spectroscopy and Method 321 for the measurement of gaseous hydrogen chloride emissions from portland cement kilns by FTIR spectroscopy to appendix A of part 63.

Some of the hazardous air pollutants (HAPs) released from portland cement manufacturing facilities include, but are not limited to, acetaldehyde, arsenic, benzene, cadmium, chromium, chlorobenzene, dibenzofurans, formaldehyde, hexane, hydrogen chloride, lead, manganese, mercury, naphthalene, nickel, phenol, polycyclic organic matter, selenium, styrene, 2,3,7,8-tetrachlorodibenzo-p-dioxin, toluene, and xylenes. Exposure to these HAPs can cause reversible or irreversible health effects including carcinogenic, respiratory, nervous system, developmental, reproductive and/or dermal health effects. The EPA estimates that this final rule will reduce nationwide emissions of HAPs from portland cement manufacturing facilities by approximately 82 megagrams per year (Mg/yr) [90 tons per year (tpy)], and particulate matter (PM) by approximately 4,700 Mg/yr (5,200 tpy).

These standards implement section 112(d) of the Clean Air Act (CAA) and are based on the Administrator's determination that portland cement manufacturing facilities may reasonably be anticipated to emit several of the 188 HAPs listed in section 112(b) of the CAA from the various process operations found within the industry. The final rule provides protection to the public by requiring portland cement manufacturing plants to meet emission standards reflecting the application of the maximum achievable control technology (MACT).

EFFECTIVE DATE: June 14, 1999. See the **SUPPLEMENTARY INFORMATION** section concerning judicial review.

ADDRESSES: *Docket.* Docket No. A–92–53, containing information considered by the EPA in development of the promulgated standards, is available for public inspection between 8:00 a.m. to 5:30 p.m., Monday through Friday, except Federal holidays, at the following address: U.S. Environmental Protection Agency, Air and Radiation Docket and Information Center (6102), 401 M Street S.W., Washington, DC 20460, telephone number (202) 260–7548. The docket is located at the above address in room M–1500, Waterside Mall (ground floor). A reasonable fee may be charged for copying docket materials.

FOR FURTHER INFORMATION CONTACT: For further information concerning applicability and rule determinations, contact the appropriate State or local agency representative. If no State or local representative is available, contact the EPA Regional Office staff listed in the Supplementary Information section of this preamble. For information concerning the analyses performed in developing this rule, contact Mr. Joseph Wood, P. E., Minerals and Inorganic Chemicals Group, Emission Standards Division (MD–13), Office of Air Quality Planning and Standards, U.S. EPA, Research Triangle Park, North Carolina 27711, telephone number (919) 541–5446, facsimile number (919) 541–5600, electronic mail address ''wood.joe@epamail.epa.gov''. For information regarding Methods 320 and 321 contact Ms. Rima Dishakjian, Emission Measurement Center, Emissions, Monitoring and Analysis Division (MD–19), U.S. Environmental Protection Agency, Research Triangle Park, NC 27711, telephone number (919) 541–0443.

SUPPLEMENTARY INFORMATION:

Regulated entities. Entities potentially regulated by this action are those that manufacture portland cement. Regulated categories and entities shown in Table 1.

TABLE 1.—REGULATED ENTITIES

Category	NAICS Code	SIC Code	Examples of Regulated Entities
Industry	32731	3241	Owners or operators of portland cement manufacturing plants.
State	32731	3241	Owners or operators of portland cement manufacturing plants.
Tribal associations	32731	3241	Owners or operators of portland cement manufacturing plants.
Federal agencies	(1)	(1)	None.

1 None.

This table is not intended to be exhaustive, but rather provides a guide for readers regarding entities likely to be regulated by this action. This table lists the types of entities that the EPA is now aware could potentially be regulated by this action. To determine whether your facility, company, business organization, etc. is regulated by this action, you should carefully examine the applicability criteria in § 63.1340 of the rule. If you have questions regarding the applicability of this action to a particular entity, consult the appropriate regional representative:

Region 1—Janet Bowen, Office of Ecosystem Protection, U.S. EPA, Region I, CAP, JFK Federal Building, Boston, MA 02203, (617) 565–3595.

Region II—Kenneth Eng, Air Compliance Branch Chief, U.S. EPA, Region II, 290 Broadway, New York, NY 10007–1866 (212) 637–4000.

Region III—Bernard Turlinski, Air Enforcement Branch Chief, U.S. EPA, Region III (3AT10), 841 Chestnut Building, Philadelphia, PA 19107, (215) 566–2110.

Region IV—Lee Page, Air Enforcement Branch, U.S. EPA, Region IV, Atlanta Federal Center, 61 Forsyth Street, Atlanta, GA 30303–3104, (404) 562–9131.

Region V—George T. Czerniak, Jr., Air Enforcement Branch Chief, U.S. EPA, Region V (5AE–26), 77 West Jackson Street, Chicago, IL 60604, (312) 353–2088.

Region VI—John R. Hepola, Air Enforcement Branch Chief, U.S. EPA,

Region VI, 1445 Ross Avenue, Suite 1200, Dallas, TX 75202–2733, (214) 665–7220.

Region VII—Donald Toensing, Chief, Air Permitting and Compliance Branch, U.S. EPA, Region VII, 726 Minnesota Avenue, Kansas City, KS 66101, (913) 551–7446.

Region VIII—Douglas M. Skie, Air and Technical Operations Branch Chief, U.S. EPA, Region VIII, 999 18th Street, Suite 500, Denver, CO 80202–2466, (303) 312–6432.

Region IX—Barbara Gross, Air Compliance Branch Chief, U.S. EPA, Region IX, 75 Hawthorne Street, San Francisco, CA 94105, (415) 744–1138.

Region X—Anita Frankel, Air and Radiation Branch Chief, U.S. EPA, Region X (AT–092), 1200 Sixth Avenue, Seattle, WA 98101–1128, (206) 553–1757.

Judicial Review. The NESHAP for portland cement manufacturing was proposed on March 24, 1998 (63 FR 14182). Today's **Federal Register** action announces the EPA's final decision on the rule. Under section 307(b)(1) of the Act, judicial review of the final rule is available by filing a petition for review in the U.S. Court of Appeals for the District of Columbia Circuit within 60 days of today's publication of this final rule. Under section 307(b)(2) of the Act, the requirements that are the subject of today's notice may not be challenged later in civil or criminal proceedings brought by the EPA to enforce these requirements.

Technology Transfer Network. In addition to being available in the docket, an electronic copy of today's document, which includes the regulatory text, is available through the Technology Transfer Network (TTN) at the Office of Air and Radiation Policy and Guidance website. Following promulgation, a copy of the rule will be posted at the TTN's policy and guidance page for newly proposed or promulgated rules (http://www.epa.gov/ttn/oarpg/t3pfpr.html). A copy of the Response to Comments document for this rule will be posted on the TTN at http://www.epa.gov/ttn/oarpg/t3bid.html. The TTN provides information from EPA in various areas of air pollution technology or policy. If more information on the TTN is needed, call the TTN help line at (919) 541–5384.

Outline. The following outline is provided to aid in reading this preamble to the final rule.

I. Statutory Authority
II. Background and Public Participation
III. Summary of Final Rule
A. Applicability
B. Emission Limits and Operating Limits
C. Performance Test Provisions
D. Monitoring Requirements
E. Notification, Recordkeeping, and Reporting Requirements
IV. Summary of Changes Since Proposal
A. Designation of Affected Sources
B. Definitions
C. Emission Standards and Operating Limits
D. Performance Test Requirements
E. Monitoring Requirements
F. Additional Test Methods
G. Reporting
H. Exemption from New Source Performance Standards
I. Delegation of Authority
J. Test Methods 320, 321, and 322
V. Summary of Impacts
A. Air Quality Impacts
B. Water Impacts
C. Solid Waste Impacts
D. Energy Impacts
E. Nonair Health and Environmental Impacts
F. Cost Impacts
G. Economic Impacts
VI. Summary of Responses to Major Comments
VII. Administrative Requirements
A. Docket
B. Executive Order 12866
C. Executive Order 12875: Enhancing Intergovernmental Partnerships
D. Unfunded Mandates Reform Act
E. Regulatory Flexibility Act
F. Submission to Congress and the General Accounting Office
G. Paperwork Reduction Act
H. Pollution Prevention Act
I. National Technology Transfer and Advancement Act
J. Executive Order 13045
K. Executive Order 13084: Consultation and Coordination with Indian Tribal Governments

I. Statutory Authority

The statutory authority for this rule is provided by sections 101, 112, 113, 114, 116, and 301 of the Clean Air Act, as amended (42 U.S.C. 7401, 7412, 7413, 7414, 7416, and 7601). This rule is also subject to section 307(d) of the CAA (42 U.S.C. 7407(d)).

II. Background and Public Participation

The Clean Air Act was created in part ''to protect and enhance the quality of the Nation's air resources so as to promote the public health and welfare and the productive capacity of its population.'' (Clean Air Act, section 101(b)(1)) Section 112(b), as revised in 61 FR 30816 (June 18, 1996), lists 188 HAPs believed to cause adverse health or environmental effects. Section 112(d) requires that emission standards be promulgated for all categories and subcategories of ''major'' sources of these HAP and for ''area'' sources listed for regulation, pursuant to section 112(c). Major sources are defined as those that emit or have the potential to emit (from all emission points in all source categories within the facility) at least 10 tons per year of any single HAP or 25 tons per year of any combination of HAP. Area sources are stationary sources of HAP that are not major sources.

On July 16, 1992 (57 FR 31576), the EPA published a list of categories of sources slated for regulation. This list included the portland cement source category regulated by the standards being promulgated today. The statute requires emissions standards for the listed source categories to be promulgated between November 1992 and November 2000. On June 4, 1996, the EPA published a schedule for promulgating these standards (61 FR 28197). Standards for the portland cement manufacturing source category covered by this rule were proposed on March 24, 1998 (63 FR 14182).

As in the proposal, the final standards give existing sources 3 years from the date of promulgation to comply. New sources are required to comply with the standard upon initial startup. The EPA believes these standards to be achievable for affected sources within the time provided.

Operating limits, methods for determining initial compliance, as well as monitoring, recordkeeping, and reporting requirements are included in the final rule. All of these components are necessary to ensure that sources will comply with the standards both initially and over time. However, the EPA has made every effort to simplify the requirements in the rule.

The amended Clean Air Act requires the EPA to promulgate national emission standards for sources of HAPs. Section 112(d) provides that these standards must reflect:

''* * * the maximum degree of reduction in emissions of the HAP * * * that the Administrator, taking into consideration the cost of achieving such emission reduction, and any nonair quality health and environmental impacts and energy requirements, determines is achievable for new or existing sources in the category or subcategory to which such emission standard applies * * *'' [42 U.S.C. 7412(d)(2)].

This level of control is referred to as MACT. The Clean Air Act goes on to establish the least stringent level of control for MACT; this level is termed the ''MACT floor.''

For new sources, the standards for a source category or subcategory ''shall not be less stringent than the emission control that is achieved in practice by the best controlled similar source, as determined by the Administrator'' [section 112(d)(3)]. Existing source

standards shall be no less stringent than the average emission limitation achieved by the best performing 12 percent of the existing sources for source categories and subcategories with 30 or more sources, or the average emission limitation achieved by the best performing 5 sources for sources or subcategories with fewer than 30 sources [section 112(d)(3)]. These two minimum levels of control define the MACT floor for new and existing sources.

The standards were proposed in the **Federal Register** on March 24, 1998 (63 FR 14182). The preamble for the proposed standards described the rationale for the proposed standards. Public comments were solicited at the time of proposal. To provide interested individuals the opportunity for oral presentation of data, views, or arguments concerning the proposed standards, a public hearing was offered at proposal. However, the public did not request a hearing and, therefore, one was not held. The public comment period, which was extended by thirty days in response to requests from commenters, was from March 24, 1998 to June 26, 1998. A total of 28 comment letters were received. Commenters included industry representatives, State and local agencies, and environmental groups. Today's final rule reflects the EPA's full consideration of all of the comments. These public comments along with the EPA's responses to comments on the proposed rule are summarized in this preamble. A more detailed discussion of public comments and the EPA's responses can be found in the Response to Comment Document (Docket No. A–92–53, Item V–C–1).

III. Summary of Final Rule

A. Applicability

The standards apply to each portland cement manufacturing plant at any facility which is a major source or an area source, with the following exception. Some portland cement plants fire hazardous wastes in the kiln to provide part or all of the fuel requirement for clinker production. Portland cement kilns and in-line kiln/raw mills subject to the NESHAP for hazardous waste combustors (HWC), 40 CFR 63, subpart EEE, are not subject to this standard; however other affected sources at portland cement plants where hazardous waste is burned in the kiln are subject to this standard. HW kilns and HW in-line kiln/raw mills that temporarily or permanently stop burning hazardous waste may be subject to the emission standards, notification, testing, and monitoring requirements of today's rule, as provided by subpart EEE of this part.

Except for hazardous waste burning (HW) cement kilns and HW in-line kiln/raw mills, these standards apply to all cement kilns and in-line kiln/raw mills regardless of the material being combusted in the kiln. Currently, cement kilns which combust municipal solid waste, medical waste, or other waste materials (other than HW) are subject to today's rule. Since these devices currently are not subject to section 129 standards, EPA is including them in this rule to avoid a situation where they aren't regulated at all. This measure, however, is potentially an interim step. EPA could determine that cement kilns combusting solid waste materials should be regulated under section 129 of the Clean Air Act, 42 U.S.C. § 7429, and if so, EPA would revise the applicability section of these regulations accordingly at the time section 129 regulations applicable to cement kilns are promulgated.

EPA also considered but rejected the possibility of subcategorizing cement kilns based on the nature of feed preparation for the kiln. As discussed in the proposal preamble, there are two types of portland cement manufacturing processes differentiated on the basis of feed preparation: wet process, and dry process (which includes the long kiln dry process, preheater process, and preheater/precalciner process). The wet process kilns and all variations of the dry process kilns use the same raw materials and use the same types of air pollution controls. Therefore, if subcategories were defined based on process type, the MACT floor technology would be identical (docket item II–B–73). For this reason, the EPA is not promulgating separate rules based on process (kiln) type.

For portland cement plants with on-site non-metallic minerals processing facilities, the first affected source in the sequence of materials handling operations subject to this NESHAP is the raw material storage, which is just prior to the raw mill. The primary and secondary crushers and any other equipment in the non-metallic minerals processing plant, which precede the raw material storage are not affected sources under this NESHAP. The first conveyor system transfer point subject to this NESHAP is the transfer point associated with the conveyor transferring material from the raw material storage to the raw mill.

This regulation does not apply to the emissions from cement kiln dust (CKD) storage facilities (e.g., CKD piles or landfills). A separate rulemaking will be forthcoming utilizing RCRA authority that will apply to air emissions associated with CKD management and disposal facilities.

B. Emission Limits and Operating Limits

In today's notice, the EPA is establishing emission limitations for particulate matter (as a surrogate for HAP metals), dioxins/furans (D/F), and total hydrocarbons (as a surrogate for organic HAPs, including polycyclic organic matter). The NESHAP for portland cement manufacturing applies to both major and area sources of HAPs. The affected sources for which emission limits are established include the non-hazardous waste (NHW) kiln, NHW in-line kiln/raw mill, clinker cooler, raw material dryer, and materials handling processes that include the raw mill, finish mill, raw material storage, clinker storage, finished product storage, conveyor transfer points, bagging and bulk loading and unloading systems (hereafter referred to as materials handling processes).

The NESHAP limits PM (surrogate for HAP metals) emissions, as well as opacity, from new and existing NHW kilns, NHW in-line kiln/raw mills, and clinker coolers, and limits opacity from raw material dryers and materials handling processes, at portland cement plants which are major sources. The rule also limits D/F emissions from new and existing NHW kilns and NHW in-line kiln/raw mills located at portland cement plants which are major or area sources of HAPs. In addition, the rule limits total hydrocarbon (THC) as a surrogate for organic HAP emissions from new greenfield NHW kilns, new greenfield NHW in-line kiln/raw mills, and new greenfield raw material dryers at portland cement plants which are major or area sources. Tables 2 and 3 present a summary of the emission limits for new and existing portland cement affected sources.

TABLE 2.—SUMMARY OF EMISSION LIMITS [a,b] FOR AFFECTED SOURCES AT PORTLAND CEMENT PLANTS

(Metric units)

Affected source and pollutant	Emission limit for existing sources	Emission limit for new sources
NHW kiln and NHW in-line kiln/raw mill [c] PM	0.15 kg/Mg dry feed [e] and opacity level [c] no greater than 20 percent	0.15 kg/Mg dry feed [e] and opacity level [c] no greater than 20 percent
NHW kiln and NHW in-line kiln/raw mill D/F [c,d]	0.2 ng TEQ/dscm or 0.4 ng TEQ/dscm with PM control device operated at ≤204°C [g]	0.2 ng TEQ/dscm or 0.4 ng TEQ/dscm with PM control device operated at ≤204°C [g]
NHW kiln and NHW in-line kiln/raw mill THC [d]	none	50 ppmvd [f] (as propane)
Clinker cooler PM	0.05 kg/Mg dry feed and opacity level no greater than 10 percent	0.05 kg/Mg dry feed and opacity level no greater than 10 percent
Raw material dryer and materials handling processes (raw mill system, finish mill system, raw material storage, clinker storage, finished product storage, conveyor transfer points, bagging, and bulk loading and unloading systems) PM.	10 percent opacity	10 percent opacity
Raw material dryer THC [d]	none	50 ppmvd [f] (as propane)

[a] All concentration limits at 7 percent oxygen.
[b] Applies to major sources only, except as noted.
[c] Includes main and alkali bypass stacks.
[d] Applies to both major and area source portland cement plants.
[e] If there is an alkali bypass stack associated with the kiln or in-line kiln/raw mill, the combined PM emission from the kiln or in-line kiln/raw mill and the alkali bypass must be less than 0.15 kg/Mg dry feed.
[f] Applies only to new greenfield affected sources.
[g] The average temperature of the test run averages during performance test must be less than or equal to 204 degrees C.

TABLE 3.—SUMMARY OF EMISSION LIMITS [a,b] FOR AFFECTED SOURCES AT PORTLAND CEMENT PLANTS

(English units)

Affected source and pollutant	Emission limit for existing sources	Emission limit for new sources
NHW kiln and NHW in-line kiln/raw mill [c] PM	0.30 lb/ton dry feed [e] and opacity level [c] no greater than 20 percent	0.30 lb/ton dry feed [e] and opacity level [c] no greater than 20 percent
NHW kiln and NHW in-line kiln/raw mill D/F [c,d]	8.7×10^{-11} gr TEQ/dscf or 1.7×10^{-10} gr TEQ/dscf with PM control device operated at ≤400°F [g]	8.7×10^{-11} gr TEQ/dscf or 1.7×10^{-10} gr TEQ/dscf with PM control device operated at ≤400°F [g]
NHW kiln and NHW in-line kiln/raw mill THC [d]	none	50 ppmvd [f] (as propane)
Clinker cooler PM	0.10 lb/ton dry feed and opacity level no greater than 10 percent	0.10 lb/ton dry feed and opacity level no greater than 10 percent
Raw material dryer and materials handling processes (raw mill system, finish mill system, raw material storage, clinker storage, finished product storage, conveyor transfer points, bagging, and bulk loading and unloading systems) PM.	10 percent opacity	10 percent opacity
Raw material dryer THC [d]	none	50 ppmvd [f] (as propane)

[a] All concentration limits at 7 percent oxygen.
[b] Applies to major sources only, except as noted.
[c] Includes main and alkali bypass stacks.
[d] Applies to both major and area source portland cement plants.
[e] If there is an alkali bypass stack associated with the kiln or in-line kiln/raw mill, the combined PM emission from the kiln or in-line kiln/raw mill and the alkali bypass must be less than 0.30 lb/ton dry feed.
[f] Applies only to new greenfield affected sources.
[g] The average temperature of the test run averages during performance test must be less than or equal to 400 degrees F.

The NESHAP imposes operating limits on affected sources that are subject to D/F emission limits. These operating limits are summarized in Table 4.

TABLE 4.—SUMMARY OF OPERATING LIMITS FOR AFFECTED SOURCES AT PORTLAND CEMENT PLANTS

Affected Source/Pollutant	Pollutant	Operating Limits
All kilns and in-line kiln raw mills at major and area sources (including alkali bypasses).	D/F	Operate such that the 3-hour rolling average particulate matter control device (PMCD) inlet temperature is no greater than temperature established at performance test. Operate such that the three-hour rolling average activated carbon injection rate is no less than the rate established at performance test (if applicable). Operate such that the three-hour rolling average activated carbon injection nozzle pressure drop or carrier fluid flow rate is no less than that specified by manufacturer (if applicable).

The rule requires the owner or operator to operate such that the temperature at the inlet to the kiln or in-line kiln raw mill particulate matter control device (PMCD) is at a level no greater than the level established during the successful Method 23 performance test. The three-hour rolling average temperature limit is established by taking the average of the one-minute average temperatures for each test run conducted during the successful Method 23 performance test, then averaging each test run average. Further, sources may petition the Administrator for an alternate averaging period or method for establishing operating parameter limits.

Owners or operators of in-line kiln/raw mills are required to establish separate PMCD inlet temperatures applicable to periods when the raw mill is operating and periods when the raw mill is not operating. The appropriate ''raw mill operating status dependent'' PMCD inlet temperature shall not be exceeded. Owners or operators of kilns or in-line kiln/raw mills equipped with alkali bypasses are required to establish a separate temperatures for the inlet to the kiln or in-line kiln raw mill PMCD and the kiln or in-line kiln/raw mill alkali bypass PMCD. The applicable temperature limit for the alkali bypass is established during the performance test in which the raw mill is operating.

After a transition period in which the status of the raw mill was changed from ''off'' to ''on'' or from ''on'' to ''off'', compliance with the operating limits for the new mode of operation begins, and the three-hour rolling average is established anew, i.e., without considering previous recordings.

If carbon injection is used for D/F control, the carbon injection system must be operated such that the carbon injection rate shall be maintained at a level equaling or exceeding the rate which existed during the successful Method 23 performance test. The three-hour rolling average carbon injection rate limit is established in the same way as the temperature limit, as described above. The injection nozzle pressure drop or carrier fluid flow rate must also be monitored, and the minimum levels for these parameters are established based on manufacturers specifications. The nozzle pressure drop or carrier fluid flow rate is monitored with a 3-hour rolling averaging period.

C. Performance Test Provisions

A performance test is required to demonstrate initial compliance with each applicable numerical limit. The rule requires the owner or operator to use EPA Method 5, ''Determination of Particulate Emissions from Stationary Sources'' to measure PM emissions from kilns, in-line kiln/raw mills and clinker coolers. These tests will be repeated every 5 years. Kilns and in-line kiln/raw mills equipped with alkali bypasses are required to meet the particulate standard based on combined emissions from the kiln exhaust and the alkali bypass. Owners or operators of in-line kiln/raw mills are required to conduct a Method 5 performance test while the raw mill is operating and a separate Method 5 performance test while the raw mill is not operating. In conducting the Method 5 tests, a determination of the particulate matter collected in the impingers (''back half'') of the particulate sampling train is not required to demonstrate initial compliance with the standard, however the permitting authority may require a ''back half'' for permitting, determination of emission fees, particulate matter monitoring or other purposes. Owners or operators are also required to determine the kiln or in-line kiln/raw mill dry feed rate, because the PM emission standards for kilns, in-line kiln/raw mills and clinker coolers are expressed as lb PM/ton (kg PM/Mg) dry feed.

The opacity exhibited during the period of the initial Method 5 performance test shall be determined, if feasible, through the use of a continuous opacity monitor (COM). Where the control device exhausts through a monovent or where the use of a COM in accordance with the installation specifications of EPA Performance Specification (PS)–1 of appendix B to 40 CFR part 60, is not feasible, EPA Method 9, ''Visual Determination of the Opacity of Emissions from Stationary Sources'' shall be used. Where the control device discharges through a fabric filter (FF) with multiple stacks or an electrostatic precipitator (ESP) with multiple stacks, the owner or operator has the option of conducting an opacity test in accordance with Method 9, in lieu of installing a COM.

The rule requires the owner or operator to use EPA Method 23, ''Determination of Polychlorinated Dibenzo-p-dioxins and Polychlorinated Dibenzofurans from Stationary Sources'' to measure D/F emissions from kilns and in-line kiln/raw mills. These D/F tests shall be repeated every 2 and one-half years. The temperature at the inlet to the particulate matter control device (PMCD) during the period of the Method 23 performance test shall be continuously recorded. One minute average temperatures must be calculated for each minute of each run of the test. The average of the one-minute averages must be calculated for each test run and included in the performance test report. The average of one-minute averages for each test run is averaged for all test runs, and this is the operating temperature limit not-to-be-exceeded by any 3-hour rolling average temperature during subsequent operations of the affected source. If carbon injection is used for D/F control, the carbon injection rate and other associated operating parameters must be measured during the period of each run of the Method 23 performance tests. The average carbon injection rate and other associated operating parameters measured for the three runs must be determined and included in the test report.

Owners or operators of in-line kiln/raw mills are required to conduct a Method 23 performance test, and record the temperature at the inlet to the PMCD

while the raw mill is operating, and a separate Method 23 performance test with PMCD inlet temperature recording while the raw mill is not operating. If applicable, the carbon injection rate shall be determined during both performance tests. Where applicable, the exhausts from both the kiln or in-line kiln/raw mill and the alkali bypass are required to meet the D/F standard.

The owner or operator is required to repeat the performance tests for opacity, PM, and D/F emissions from kilns and in-line kiln/raw mills within 90 days of any significant change in the raw material components or fuels fed to the kiln (e.g, when there is an increase in the input rate of municipal solid waste, tire-derived fuel, medical waste, or other solid wastes to the kiln or in-line kiln/raw mill, above the rate used in the previous performance test.) Under the standard, the owner or operator shall use a THC continuous emission monitor (CEM) to conduct a performance test of THC emissions from new greenfield kilns, new greenfield in-line kiln/raw mills, and new greenfield raw material dryers. Owners or operators of new greenfield in-line kiln/raw mills are required to demonstrate initial compliance by measuring THC emissions while the raw mill is operating and while the raw mill is not operating. The standard for THC does not apply to the exhaust from the alkali bypass of kilns or the alkali bypass of in-line kiln/raw mills, and these streams are not subject to a performance test for THC. Each THC CEM is required to be designed, installed, and operated in accordance with EPA Performance Specification (PS)–8A of 40 CFR part 60, appendix B.

Under the standard, the owner or operator shall use EPA Method 9, ''Visual Determination of the Opacity of Emissions from Stationary Sources'' to measure the opacity of gases discharged from raw mills, finish mills, raw material dryers and materials handling processes. These tests would be repeated every five years. A summary of performance test requirements is given in Table 5.

TABLE 5.—SUMMARY OF PERFORMANCE TEST REQUIREMENTS

Affected source and pollutant	Performance Test
New and existing NHW kiln and NHW in-line kiln/raw mill [b c] PM	EPA Method 5 [a]
New and existing NHW kiln and NHW in-line kiln/raw mill [b c] Opacity	COM if feasible [d e] or EPA Method 9 visual opacity readings.
New and existing NHW kiln and NHW in-line kiln/raw mill [b c f g] D/F	EPA Method 23 [j]
New greenfield NHW kiln and NHW in-line kiln/raw mill THC	THC CEM (EPA PS–8A) [h]
New and existing clinker cooler PM	EPA Method 5 [a]
New and existing clinker cooler opacity	COM [d i] or EPA Method 9 visual opacity readings
New and existing raw and finish mill PM	EPA Method 9 [a i]
New and existing raw material dryer and materials handling processes (raw material storage, clinker storage, finished product storage, conveyor transfer points, bagging, and bulk loading and unloading systems) PM.	EPA Method 9 [a i]
New greenfield raw material dryer THC	THC CEM (EPA PS–8A) [h]

[a] Required initially and every 5 years thereafter.
[b] Includes main exhaust and alkali bypass.
[c] In-line kiln/raw mill to be tested with and without raw mill in operation.
[d] Must meet COM performance specification criteria. If the fabric filter or electrostatic precipitator has multiple stacks, daily EPA Method 9 visual opacity readings may be taken instead of using a COM.
[e] Opacity limit is 20 percent.
[f] Alkali bypass is tested with the raw mill on.
[g] Temperature parameters determined separately with and without the raw mill operating.
[h] EPA Performance Specification (PS)-8A of appendix B to 40 CFR part 60.
[i] Opacity limit is 10 percent.
[j] Required initially and every 2.5 years thereafter.

D. Monitoring Requirements

The owner or operator of each portland cement manufacturing plant shall prepare for each affected source subject to the rule, a written operations and maintenance plan. The plan shall be submitted to the Administrator for review and approval as part of the application for a part 70 permit. The operations and maintenance plan shall include procedures for proper operation and maintenance of the affected source and air pollution control devices in order to meet the emission limits of the rule. The operations and maintenance plan shall also include procedures to be used during an inspection of the components of the combustion system of each kiln and each in-line kiln/raw mill. This inspection must be conducted at least once per year. Additionally, the operations and maintenance plan shall include corrective action procedures for the raw mill and finish mill, and associated particulate matter control devices (PMCDs), which must be implemented when required by the rule. The operations and maintenance plan shall also include provisions for monitoring opacity from materials handling sources, and to conduct M. 9 tests if visible emissions are observed. (Further details of this are discussed in the preamble section ''Summary of Changes Since Proposal''.) Finally, failure to implement procedures consistent with the operations and maintenance plan will be a violation of this subpart.

The rule requires owners or operators to monitor the opacity of gases discharged from kilns, in-line kiln/raw mills, alkali bypasses and clinker coolers using a COM, if a COM can be feasibly installed in accordance with PS–1 of appendix B to 40 CFR part 60. Where it is not feasible to install a COM, e.g. where the control device discharges through a monovent, the owner or operator is required to monitor emissions by conducting daily Method 9 tests. Where the control device discharges through a FF with multiple stacks or an ESP with multiple stacks, the owner or operator has the option of conducting daily tests in accordance with Method 9, in lieu of installing a COM. The duration of the Method 9 tests is 30 minutes.

The rule requires that kilns and in-line kiln raw mills subject to the particulate matter (PM) standards must install, correlate, and operate PM continuous emission monitors (CEMs). However, the compliance date for

installing PM CEMs is deferred pending further rulemaking. Further discussion of this issue is found in the preamble sections ''Summary of Changes Since Proposal'' and ''Summary of Responses to Major Comments.''

The owner or operator of a kiln or in-line kiln raw mill must install, calibrate, maintain and continuously operate a device to monitor and record the temperature of the exhaust gases from the kiln, in-line kiln/raw mill, and/or alkali bypass (if applicable), at the inlet to or upstream of the kiln, in-line kiln/raw mill, and alkali bypass PMCD. The calibration of the thermocouple or other temperature sensor must be verified at least once every three months.

If activated carbon injection is used for D/F control, the owner or operator must install, operate, calibrate and maintain a device to continuously monitor and record the weight of activated carbon injected and record the weight in 1 minute rolling averages. The accuracy of the weight measurement device must be ± 1 percent of the weight being measured. The calibration of the device must be verified at least once every three months. The owner or operator must record the feeder setting at least once per day and determine the mass of carbon injected for every three-hour rolling average period. In addition, the carbon injection nozzle pressure drop or activated carbon carrier fluid flow rate must be monitored and recorded. Further, the activated carbon specifications must be the same as or better than the specifications of the carbon used during the previous performance test.

To clarify how the three-hour rolling average is calculated at initial start-up, operating parameter limits will not become effective on the compliance date until enough data have been accumulated to calculate the rolling average for the limit. For example, given that compliance with the standards begins nominally at 12:01 am on the compliance date, the three-hour rolling average temperature limit does not become effective as a practical matter until 3:01 am on the compliance date. This approach is adopted for all continuous monitoring systems, including CEMs.

During intermittent operations, however, periods of time when operating parameters are not recorded for any reason (e.g., source shutdown) are to be ignored when calculating rolling averages. For example, consider how the three-hour rolling average for a parameter would be calculated if a source shuts down for yearly maintenance for a three week period. The first one-minute average value recorded for the parameter for the first minute of renewed operations is added to the last 179 one-minute averages before the source shut down, to calculate the three-hour rolling average. This approach is adopted for all continuous monitoring systems, including CEMs. This approach would inhibit a source from intentionally interrupting the monitoring system to avoid unwanted parameter values.

The rule requires the owner or operator to monitor THC emissions from the main exhaust of greenfield kilns; the main exhaust of greenfield in-line kiln/raw mills; and greenfield raw material dryers using a CEM installed in accordance with PS–8A in 40 CFR part 60, appendix B.

The rule requires the owner or operator to monitor the opacity from raw mills and finish mills by conducting a daily six-minute test in accordance with Method 22, ''Visual Determination of Fugitive Emissions from Material Sources and Smoke Emissions from Flares.''

Owners or operators of raw mills and finish mills are required to initiate corrective action within one hour of a Method 22 test during which visible emissions are observed. A 30-minute Method 9 opacity test must be started within 24 hours of observing visible emissions.

A summary of monitoring requirements is given in Table 6.

TABLE 6.—SUMMARY OF MONITORING REQUIREMENTS

Affected source and pollutant or opacity	Monitor/Type/Operation/Process	Monitoring requirement
All affected sources	Operations and maintenance plan	Prepare written plan for all affected sources and control devices.
All kilns and in-line kiln raw mills at major sources (including alkali bypass)/opacity.	COM, if applicable	Install, calibrate, maintain and operate in accordance with general provisions and with PS–1.
	Method 9 opacity test, if applicable	Daily test of at least 30-minutes, while kiln is at highest load or capacity level.
All kilns and in-line kiln raw mills at major sources (including alkali bypass)/PM.	PM CEM	The compliance date is deferred until a future rulemaking, at which time EPA will consider what performance specification requirements should be established.
All kilns and in-line kiln raw mills at major and area sources (including alkali bypass)/D/F.	Combustion system inspection	Conduct annual inspection of components of combustion system.
	Continuous temperature monitoring at PMCD inlet.	Install, operate, calibrate and maintain continuous temperature monitoring and recording system; calculate 3-hour rolling average; verify temperature sensor calibration at least quarterly.
	Activated carbon injection rate, nozzle pressure drop or carrier fluid flow rate, and carbon type/brand, if applicable.	Install, operate, calibrate and maintain continuous activated carbon injection rate monitor; verify calibration at least quarterly; record feeder setting daily; calculate average injection rate for each 3-hour rolling average. Monitor nozzle pressure drop or carrier fluid flow rate according to manufacturers specifications, and calculate rolling 3-hour averages.
New greenfield kilns and in-line raw mills at major and area sources/THC.	THC CEM	Install, operate, and maintain THC CEM in accordance with PS–8A; calculate 30-day block average THC concentration.
All clinker coolers at major sources/opacity.	COM, if applicable	Install, calibrate, maintain and operate in accordance with general provisions and with PS–1.
	Method 9 opacity test, if applicable	Daily test of at least 30-minutes, while kiln is at highest load or capacity level.

TABLE 6.—SUMMARY OF MONITORING REQUIREMENTS—Continued

Affected source and pollutant or opacity	Monitor/Type/Operation/Process	Monitoring requirement
All materials handling operations (MHO) at major sources/opacity.	M. 22 visible emissions test as part of operations and maintenance plan.	For each MHO, conduct monthly 1-minute Method 22 visible emissions test; if visible emissions are observed, initiate corrective action within one hour and conduct 30-minute Method 9 test within 10 minutes. For each MHO, if no visible emissions are observed after first 6 months, reduce monitoring to semi-annual. If no VE are observed thereafter, reduce monitoring to annual basis. If VE are observed for a MHO, revert back to conducting VE tests on a monthly basis.
All raw mills and finish mills at major sources/opacity.	Method 22 visible emissions test ..	Conduct daily 6-minute Method 22 visible emissions test while mill is operating at highest load or capacity level; if visible emissions are observed, initiate corrective action within one hour and conduct 30-minute Method 9 test within 24 hours.
New greenfield raw material dryers at major and area sources/THC.	THC CEM	Install, operate, and maintain THC CEM in accordance with PS–8A; calculate 30-day block average THC concentration.

E. Notification, Recordkeeping, and Reporting Requirements

All notification, recordkeeping, and reporting requirements in the general provisions (40 CFR part 63, subpart A) apply to portland cement manufacturing plants. These include: (1) Initial notification(s) of applicability, notification of performance test, and notification of compliance status; (2) a report of performance test results; (3) a startup, shutdown, and malfunction plan with semiannual reports of reportable events (if they occur); and (4) semiannual reports of excess emissions. If excess emissions are reported, the owner or operator shall report quarterly until a request to return the reporting frequency to semiannual is approved.

The NESHAP general provisions (40 CFR part 63, subpart A) require that records be maintained for at least 5 years from the date of each record. The owner or operator must retain the records onsite for at least 2 years but may retain the records offsite the remaining 3 years. The files may be retained on microfilm, microfiche, on a computer disk, or on magnetic tape. Reports may be made on paper or on a labeled computer disk using commonly available and compatible computer software.

IV. Summary of Changes Since Proposal

In response to comments received on the proposed standards, changes have been made to the final standards. These changes include clarifications designed to make the EPA's intent clearer as well as changes to the requirements of the proposed standards. A summary of the substantive changes made since the proposal is given in the following sections, along with the rationales for these changes. Further details on the rationales for these changes can be found in Section VI of the preamble: Summary of Responses to Major Comments.

A. Designation of Affected Sources

The section of the rule on designated affected sources is being clarified to include new greenfield raw material dryers that are located at facilities that are area sources. The EPA is clarifying today that these affected sources are subject to limitations on THC. The preamble for the proposed rule stated that polycyclic organic matter (POM) emissions (using THC as a surrogate) from portland cement NHW kiln area sources would be subject to MACT standards under EPA's interpretation of section 112(c)(6). The EPA proposed to use THC as a surrogate for organic HAPs, and today it is clarifying that POM is an organic HAP for which THC is a surrogate. Since POM was a listed HAP from portland cement NHW cement kilns (at both area and major source portland cement plants) in the section 112(c)(6) listing (63 FR 17838, April 10, 1998), the EPA is clarifying that the limitation of emissions of THC applies to new greenfield cement kilns, in-line kiln raw mills and raw material dryers at major and area source cement plants in the portland cement industry. Further discussion of this change is found below in the discussion of standards.

B. Definitions

The definitions of ''alkali bypass'' and ''feed'' have been expanded to reflect cement industry practices. Definitions of ''greenfield'' and new ''brownfield'' affected sources have been added to the final rule to clarify the applicability of the final THC standards to specific affected sources. A definition of ''one-minute average'' has been added to clarify the monitoring provisions of the final rule. A definition of rolling average has been added to clarify and maintain consistency with the requirements for HW kilns.

C. Emission Standards and Operating Limits

Based on comments received, the EPA is clarifying today that the THC limitation applicable to new kilns, new in-line kiln/raw mills, and new raw material dryers is restricted to greenfield sources, in recognition of the difficulty that owners or operators of reconstructed and new brownfield affected sources might have in obtaining suitable kiln feed materials while remaining competitive. The selection of a site tied to feed materials with relatively low levels of naturally occurring organic matter is the basis for the MACT standard and is an option only available to greenfield sources. Further, as discussed above, the EPA is clarifying that this THC limitation applies to new greenfield kilns, new greenfield in-line kiln/raw mills, and greenfield raw material dryers located at facilities that are area, as well as major, sources.

The requirements in the proposal for initiating a site-specific operating and maintenance plan, and implementation of a quality improvement plan, due to stipulated exceedences of a 15 percent kiln opacity limit, have been removed. The EPA agrees with commenters who questioned this tiered approach, and so the final rule will retain only a 20 percent opacity limit for the kiln and in-line kiln/raw mill.

In response to a comment, the EPA is clarifying that the opacity limitation on gases discharged from raw mills and finish mills is restricted to the mill sweep and air separator air pollution control devices. This is consistent with the MACT floor technology for control of gases from these affected sources.

The final rule has been reformatted to provide a separate section for operating

limits. Control of temperature at the inlet to kiln and in-line kiln/raw mill PMCDs and control of the activated carbon injection parameters (if applied as a D/F control technique) are provisions promulgated as operating limits.

The averaging period for the operating limit for the inlet kiln and in-line kiln/raw mill PM control device temperature (to demonstrate compliance with the D/F emission limits) has been changed from a 9-hour block average period to a three-hour rolling average period. Comments were received that the averaging period should be shorter. In addition, the rule has been clarified to include data reduction procedures to be followed to demonstrate compliance. Furthermore, sources may petition the Administrator for an alternate averaging period or method for establishing operating parameter limits.

The provisions for establishing the PM control device inlet temperature limit based on the D/F performance test have been changed to correct an error in drafting the proposal. A commenter pointed out that the proposal would allow a source to conduct its D/F performance test with an inlet PM control device temperature below 400 degrees F, but after the performance test, the source would be allowed to operate its PM control device with an inlet temperature up to 400 degrees F. In drafting the proposal, the EPA did not intend to allow a source to operate its PM control device at a temperature higher than the temperature during the performance test, and so the EPA is clarifying today that the inlet temperature limit is established as and capped at the average temperature during the D/F performance test. To further achieve consistency with the D/F temperature requirements for HW kilns and to better assure that the standard reflects MACT, the EPA is dropping the proposed provision which would have allowed the temperature limit to be established as the average temperature during the performance test plus 25 degrees F if the D/F level was below 0.15 ng/dscm. To clarify and maintain consistency with the requirements for HW kilns (and to best implement standards representing MACT), if the source complies with the O.4 ng TEQ/dscm D/F limit, the average temperature of the test run averages during the performance test must be below 400 degrees F. To further achieve consistency with the requirements for HW kilns, additional operating parameter limits associated with the use of activated carbon injection must be established and these parameters must be monitored continuously. The averaging period for the activated carbon injection rate and other operating parameters has been changed from a 9-hour period to a 3-hour rolling average period. Further details on the establishment of the temperature and other operating parameter limits are discussed in section VI. of this preamble.

D. Performance Test Requirements

In response to comment, the EPA is clarifying that both during the performance test and to demonstrate continuous compliance, opacity limitations for the kiln and clinker cooler must be met for each 6-minute block period. (The proposal incorrectly required a 30-minute averaging time.) This is consistent with the requirements of the NSPS, which is the basis for the MACT floor for PM/metals and opacity.

Based on comments received that there should be consistency with the requirements for HW kilns, the performance tests for D/F must be conducted every 2 and one-half years. (The proposal would have required that the D/F emissions tests be conducted every 5 years.) To further achieve consistency, and to assure that the kiln continues to achieve the requisite emissions reductions reflected in the standard, the EPA is also clarifying today that in addition to repeating performance tests every five years (or 2.5 years for the D/F performance tests), performance tests for kilns or in-line kiln/raw mills must be repeated within 90 days of initiating any significant change in the feed materials or fuels fed to the kilns (e.g., an increase in the input rate of municipal solid waste, tire-derived fuel, or medical waste to the kiln or in-line kiln/raw mill above the rate used in the previous performance test; or a switch from burning natural gas to coal). Such changes in fuel or feeds could result in changes to emissions.

E. Monitoring Requirements

In response to a comment, clarification has been added to the final rule to establish that any required Method 9 and Method 22 tests must be conducted while the affected source is operating at the highest load or capacity level reasonably expected to occur within the day that the test is performed.

The option for use of triboelectric bag leak detection systems for monitoring raw mill and finish mill fabric filter performance is not being promulgated at this time. Numerous commenters expressed concern regarding installation, operation, calibration and maintenance, and that the lack of clear-cut specifications would lead to open-ended liability for owners/operators. Those owners or operators who want to use bag leak detection systems may petition the Administrator for approval of alternative monitoring requirements under the General Provisions.

Requirements for temperature monitoring devices (including range and reference standard) have been added to the final rule. In response to a comment, monitoring requirements for activated carbon injection system accuracy, calibration frequency, and data recording and reduction have also been added to the final rule. To achieve consistency with the requirements for HW kilns, activated carbon injection nozzle pressure drop or carrier fluid flow rate, and carbon specifications, must also be monitored and recorded.

An explicit monitoring requirement for an inspection of the components of the combustion system of each kiln or in-line kiln/raw mill has been added to the rule. This inspection must be conducted at least once per year, in accordance with the procedures specified in the operation and maintenance plan for the affected source. This change was made in response to several comments that were received suggesting that provisions (such as limitations on and monitoring of carbon monoxide) be added to the final rule to ensure good combustion and thus minimize formation of D/F.

The operations and maintenance plan requirement has been changed to explain that the plan must also include provisions for observing opacity from materials handling sources, and for conducting a M. 9 test if visible emissions (VE) are observed. Specifically, materials handling sources' VE shall be monitored via M. 22 once per month. After 6 months without VE for each individual source, the monitoring frequency would be reduced to a semi-annual basis. If there are no VE in the next 6 month period for a particular source, the monitoring frequency would be reduced to an annual basis. If VE occurs during the annual inspection, the frequency would revert back to once per month. If VE are observed during one of these inspections, a Method 9 test is required. This change was made to provide greater assurance that these units are in compliance with the opacity limit and to meet the Agency's commitment to incorporate enhanced monitoring in all MACT standards.

Finally, the final rule is being clarified that failure to implement procedures consistent with the operations and maintenance plan will be a violation of this subpart.

In the preamble to the proposal, the EPA noted its intent to include a requirement for PM continuous emission monitors (CEMs) in the final rule, unless the analyses of new information and data showed that it is not appropriate. (See 63 FR at 14205). Based on successful testing on an incinerator, as well as extensive use of these monitors in Europe, EPA believes there is sound evidence the PM CEMs should work at cement kilns. Accordingly, the final rule contains a requirement to install PM CEMs. However, we are deferring the effective date of this requirement pending further testing and additional rulemaking. Please see the preamble section ''Summary of Responses to Major Comments'' for further details on this issue.

F. Additional Test Methods

The final rule has been changed to permit the use of either Method 320 or Method 321 for the determination of hydrogen chloride (HCl) for the purpose of making an applicability determination. These methods are being promulgated as part of this rulemaking.

Since proposal of Method 322 for the measurement of HCl along with the portland cement NESHAP, the EPA attempted to utilize Method 322 to gather data from lime kilns (which have a matrix similar to portland cement sources) and encountered technical problems with the gas filter correlation infrared spectroscopy (GFCIR). Many of these problems were adequately identified by the data quality indicators in the method. However, as a backup option, the Agency collected data sets at lime kilns using both GFCIR and Fourier transform infrared spectroscopy (FTIR). These paired data sets provide unexpected contradictory results.

The dynamic spiking results of the GFCIR would indicate that Method 322 results should be biased by overpredicting the true value (the spike recovery consistently showed greater than 100 percent recovery). However, FTIR data collected nearly simultaneously with the GFCIR data show that the GFCIR results were significantly lower than FTIR results. Since the Agency applied statistical methods to analyze the FTIR data and concluded that the FTIR method did not have a significant bias, the Agency is confident in the values reported by the FTIR instrument. Therefore, this leads to a paradox with the GFCIR data; the results are contradictory for the GFCIR. At this point, the Agency has not determined the cause of the paradox, which has led to the decision to postpone promulgation of Method 322 as an alternative method for measurement of HCl from portland cement kilns.

The EPA will continue to investigate the reasons for the differences in the two methods, and if a satisfactory solution is found to correct the problem, may consider further action on this method if additional evaluation data are available. For this reason proposed Method 322 is not being promulgated at this time and may not be used in applicability determinations for portland cement plants. (A more detailed discussion of this can be found in comment 2.5.1 in the Response to Comment Document.)

In the proposal, we stated that Methods 26 and 26A may be used in applicability determinations provided that these methods are validated concurrently using M. 321 or 322. Several comments were received stating that EPA is restricting M. 26 and M. 26A use by requiring that they be validated each time they are used, and that Method 26 has long been an approved EPA test method. Based on these comments, this requirement has been changed such that Methods 26 and 26A may be used to confirm a source is a major source without concurrent validation with M. 321 or M. 322. However, M. 26 or 26A may not be used to make the assertion that the source is an area source. Only the FTIR methods may be used for the measurement of HCl if the source wishes to claim it is not a major source. See the preamble section ''Summary of Responses to Major Comments'' for further discussion of this issue about how a source should determine whether it is a major or area source.

G. Reporting

A provision has been added to the final rule requiring that the semi-annual summary report for the period in which the annual combustion system component inspection was conducted include the results of the inspection.

H. Exemption from New Source Performance Standards

To eliminate overlap or duplicate coverage of NSPS and MACT standards for portland cement facilities, affected sources subject to requirements under this NESHAP are exempted from requirements under 40 CFR 60, subpart F, the New Source Performance Standards. However, there are two exceptions to this: kiln and in-line kiln/raw mills, and greenfield raw material dryers, that are new or reconstructed sources under the definition in Subpart F, and are located at area source cement plants, would still be subject to applicable PM limits, opacity limits, and recordkeeping and reporting requirements of the NSPS. The reason for this is that these ''NSPS'' kilns and in-line kiln/raw mills, and greenfield raw material dryers that are located at area source cement plants would be subject to the NESHAP's D/F and/or THC limits, but would not be subject to the NESHAP's PM limits, because they are located at area source cement plants.

I. Delegation of Authority

The final rule reserves authority for approval of alternate emission standards, major alternatives to test methods, major alternatives to monitoring procedures and waivers of recordkeeping.

J. Test Methods 320, 321, and 322

Test Methods 320 and 321 are being promulgated with minor corrections to clarify and improve test procedures, and correct equations incorrectly stated in the proposal notice. Proposed Test Method 322 is not being promulgated at this time as noted in Section F above.

V. Summary of Impacts

A. Air Quality Impacts

The air quality impacts of the final rule are identical to those of the proposed rule. Nationwide baseline HAP emissions from portland cement manufacturing plants are estimated to be 260 Mg/yr (290 tpy) at the current level of control. This rule will reduce emissions of HAPs by 82 Mg/yr (90 tpy) from baseline levels. Estimates of annual emissions of HAPs and expected reductions from implementation of this rule are given in metric and English units in Tables 7 and 8. The following text reviews the information provided in Tables 7 and 8.

TABLE 7.—NATIONWIDE ANNUAL EMISSION REDUCTIONS OF HAPS AND OTHER POLLUTANTS FROM PORTLAND CEMENT MANUFACTURING PLANTS

(Metric units)

Source	Pollutant	Baseline emissions (Mg/yr)	Emission reduction [Mg/yr]
Kilns, in-line kiln/raw mills, and alkali bypasses	HAP Metals [a]	150	35
	PM [a]	14,000	3,400
	D/F (TEQ) [b]	44 g/yr	16 g/yr
	Organic HAPs [c]	120	47
	THC [c]	530	200
Clinker coolers	HAP Metals [a]	1.1	0.18
	PM [a]	8,100	1,300

[a] These numbers pertain to existing sources only.
[b] These numbers pertain to both new and existing NHW kilns.
[c] These numbers pertain to new greenfield NHW kilns only.

TABLE 8.—NATIONWIDE ANNUAL EMISSION REDUCTIONS OF HAPS AND OTHER POLLUTANTS FROM PORTLAND CEMENT MANUFACTURING PLANTS

[English units]

Source	Pollutant	Baseline emissions (tpy)	Emission reduction (tpy)
Kilns, in-line kiln/raw mills, and alkali bypasses	HAP Metals [a]	160	38
	PM [a]	16,000	3,800
	D/F (TEQ) [b]	0.096 lbs/yr	0.035 lbs/yr
	Organic HAPs [c]	130	52
	THC [c]	580	220
Clinker coolers	HAP Metals [a]	1.2	0.2
	PM [a]	8,800	1,400

[a] These numbers pertain to existing sources only.
[b] These numbers pertain to both new and existing NHW kilns.
[c] These numbers pertain to new greenfield NHW kilns only.

This rule will reduce PM emissions from the existing NHW cement kilns and in-line kiln/raw mills by 3,400 Mg/yr (3,800 tpy) from the baseline level, a reduction of 24 percent. Emissions of HAP metals from the affected existing NHW cement kilns and in-line kiln/raw mills will be reduced by 35 Mg/yr (38 tpy), a reduction of 24 percent from the baseline level. Emissions of D/F TEQ will be reduced by 15 grams (g)/yr (0.033 lb/yr), a reduction of 36 percent from the baseline level, at existing NHW cement kilns and in-line kiln/raw mills located at major source and area source facilities.

For new NHW cement kilns and in-line kiln/raw mills, the MACT standards are projected to reduce emissions of D/F TEQ by an average of 0.6 g/yr (0.001 lb/yr) over the next 5 years (from major and area sources), a 36 percent reduction from projected baseline emissions. For new kilns, the MACT standards will also reduce projected emissions of THC by an average of 200 Mg/yr (220 tpy) and organic HAPs by an average of 47 Mg/yr (52 tpy) over the next 5 years, an emissions reduction for each of 39 percent from corresponding estimated nationwide baseline emissions.

The MACT standards will reduce PM emissions from 35 percent of the existing clinker coolers by 1,300 Mg/yr (1,400 tpy) from the baseline level, a reduction of 16 percent. Emissions of HAP metals from affected existing clinker coolers will be decreased by 0.18 Mg/yr (0.2 tpy), a reduction of 16 percent from the baseline level.

Additional reductions of THC and organic HAPs will result from the MACT standards for new greenfield raw material dryers. However, information on THC emission rates from raw material dryers and a projection of the number of such affected sources is not currently available, so nationwide reductions cannot be estimated.

B. Water Impacts

The impacts of the final rule are identical to those of the proposed rule. Control of D/F emissions using water injection for temperature reduction will result in an estimated increased water consumption (evaporated into the kiln exhaust gas for cooling) of 190 million gallons per year for existing NHW kilns and NHW in-line kiln/raw mills and 8 million gallons per year for new NHW kilns and NHW in-line kiln/raw mills.

C. Solid Waste Impacts

The impacts of the final rule are identical to those of the proposed rule. The amount of solid waste from existing NHW kilns, in-line kiln/raw mills, and clinker coolers (located at major sources) will increase by an estimated 4,700 Mg/yr (5,200 tpy) due to the requirements for PM control in the final rule.

D. Energy Impacts

The impacts of the final rule are identical to those of the proposed rule. For existing NHW kilns and NHW in-line kiln/raw mills the MACT standards for PM and D/F will increase energy consumption by an estimated 11 million kilowatt hours (KWh)/yr [38 billion British thermal units (Btu)/yr]. For new NHW kilns and NHW in-line kiln/raw mills the MACT standards for D/F will increase energy consumption by an estimated 10,600 KWh/yr (36 million Btu/yr).

E. Nonair Health and Environmental Impacts

The reduction in HAP emissions will have a beneficial effect on nonair health and environment impacts. Dioxin/furan and HAP metals have been found in the Great Lakes and other water bodies and

have been listed as pollutants of concern due to their persistence in the environment, potential to bioaccumulate, and toxicity to humans and the environment. Implementation of the NESHAP will aid in reducing aerial deposition of these emissions.

Occupational exposure limits under 29 CFR part 1910 are in place for some of the regulated HAPs (and surrogates) not including D/F. The National Institute for Occupational Safety and Health recommends an exposure level for D/F at the lowest feasible concentration. The final rule will reduce emissions, and consequently, occupational exposure levels for plant employees.

F. Cost Impacts

For new and existing NHW kilns, NHW in-line kilns/raw mills, clinker coolers, raw and finish mills, and materials handling facilities, the projected overall total capital costs of the final rule for controlling and monitoring emissions of D/F, PM (includes opacity), and THC are $108 million. The overall projected annual costs of the rule, for controlling and monitoring for D/F, PM (includes opacity), and THC, are $37 million. For new and existing NHW kilns and NHW in-line kiln/raw mills, the projected total capital and annual costs of complying with the MACT standard for D/F (includes controls and monitoring) are $15 million and $3.6 million, respectively. For new and existing sources subject to PM and/or opacity limits, the projected total capital and annual costs of complying with the MACT standards for PM and opacity (including PM controls, PM CEMs, and continuous opacity monitors) are $92 million and $33 million, respectively. With respect to PM CEMs costs only, the projected total capital and annual costs of PM CEMs are $15 million and 7.6 million, respectively. The THC emissions limit for new greenfield NHW kilns, NHW in-line kiln/raw mills and raw material dryers can be met by processing materials with typical levels of organic content, without installing and operating add-on pollution control systems that would be relatively costly. Feed materials that have sufficiently low levels of organic matter are widespread across the U.S., and the siting of new greenfield kilns is not expected to be significantly limited by the emission limit. The projected fifth-year national capital and annual costs of monitoring THC with a continuous emission monitor for new greenfield NHW kilns, in-line kiln/raw mills and raw material dryers are $0.75 million and $0.45 million, respectively (based on an estimated four new affected sources).

G. Economic Impacts

EPA conducted an economic analysis of the proposed NESHAP, and has reconducted its analysis to include the costs of PM CEMs and the monitoring of materials handling sources. The economic impacts of the final rule are slightly greater than those of the rule as proposed. Because the final standards may potentially include costs associated with PM CEMs and the monitoring of materials handling sources, EPA reconducted its economic analysis. This revised analysis evaluates a regulatory option that is more stringent than the final standards. Analyzing this more stringent option, which overstates the expected compliance costs, causes the economic impacts presented here to over estimate the expected impacts of the final standards. However, these economic impacts are only slightly greater than those of the proposal analysis.

The EPA estimates that regional market price increases of portland cement will be between 0.3 and 2.6 percent. The national average price increase is estimated to be 1.1 percent. The related decreases in quantity demanded of portland cement are estimated to range from 0.3 to 2.3 percent, with a national average of 1.0 percent. Domestic production of portland cement is estimated to decrease more than consumption (2.2 percent compared to 1.0 percent nationally because imports are estimated to increase by 5.5 percent). The decreases in domestic production may lead to the loss of approximately 334 jobs in the United States. No plants are expected to close; four kilns are expected to cease operating.

VI. Summary of Responses to Major Comments

A complete summary of all of the public comments on the proposal, and responses to these comments is provided in the ''Response to Comments'' document available in the docket and from EPA's Technology Transfer Network. The responses to major comments are given in this section.

Portland Cement Source Category

Comment: Commenters raised objections to splitting the portland cement category for cement kilns by the type of fuel (hazardous waste vs. fossil fuels) burned in the kiln. The commenters stated that splitting the industry by fuel type deviates from EPA's original source category list (July 16, 1992 FR) which included only a portland cement manufacturing category, and that no distinction is made regarding fuel type under the New Source Performance Standards (NSPS) for portland cement plants. The commenters were concerned that EPA's decision not to use the NSPS category will result in what Congress hoped to avoid (through section 112(c)(1)) by causing unnecessary costs and dislocations in the cement industry.

Response: Section 112(d)(1) of the Clean Air Act specifically provides that ''the Administrator may distinguish among classes, types and sizes of sources within a category or subcategory in establishing standards. . . .''. With regard to having separate categories/subcategories, the EPA believes that there can be significant differences in emissions due to hazardous waste burning that warrant separate classes for these devices. The types of HAPs found in emissions from hazardous waste-burning kilns are different from, and more numerous than, those from NHW kilns. Hazardous wastes can contain virtually any HAP, which in turn can be in stack emissions. The fact that hazardous waste-burning kilns are dealt with separately under a different statute (RCRA section 3004(q)(special standards for industrial furnaces which burn hazardous waste fuels)) likewise indicates that hazardous waste-burning cement kilns can be dealt with legitimately as a separate class. Indeed, this existing RCRA regulatory regime has created a different data base, and system of existing controls, which can result in different analyses, different floor controls and standards under the section 112 MACT process, again indicating that these sources can reasonably be classified as a distinct class. To summarize, this NESHAP for portland cement manufacturing covers NHW kilns and NHW in-line kiln raw mills; it does not apply to HW cement kilns which are subject to subpart EEE of this part. This NESHAP also covers affected sources located at portland cement manufacturing plants (such as clinker coolers, raw material dryers, and materials handling processes), regardless of whether the plant operates HW kilns.

Comment: Two commenters stated that EPA has not met its legal burden to be consistent when regulating HW and NHW cement kilns. The commenters stated that the EPA has not used consistent rationales and approaches to develop emission limitations for the same pollutants.

Response: There are a number of differences between kilns that burn hazardous waste and those that do not

in terms of process feed/fuel, process operation, pollutants and pollutant quantities generated, existing regulations that impact MACT floor determinations, and the economics of their operations. These differences provide the bases for differences in determinations of MACT floors, emission limits, and other regulatory requirements. When there is no rational reason for differences between the two standards, EPA has changed the two sets of rules (see section IV. of this preamble for a discussion of changes made to this rule since proposal) to make them more consistent.

Regulation of Cement Kilns Under Section 129

Comment: According to one commenter, the EPA is required to regulate any facility that combusts any solid waste under section 129 of the Clean Air Act. However, EPA's current section 129 regulations either: (1) Exempt portland cement kilns that burn any amount of hospital waste, medical waste, and infectious waste from the medical waste incinerator (MWI) rule, (2) exempt cement kilns that burn less than thirty percent waste from the municipal waste combustor (MWC) rule, or (3) have yet to be promulgated as the commercial and industrial waste rule. The commenter asserts that the EPA cannot fail to promulgate section 129 regulations for cement kilns that burn non-hazardous solid waste by suggesting that it may promulgate section 129 regulations in the future. Cement kilns would then be permitted to combust any of these wastes without complying with section 129, despite the fact that the Clean Air Act expressly mandates that any unit burning any solid waste must comply with section 129. Therefore, the commenter asserts that the EPA must promulgate section 129 standards for cement kilns that burn any solid waste now. If EPA cannot promulgate section 129 standards immediately, the commenter asserts that EPA must, at a minimum, include numerical emission standards for the pollutants listed in section 129 (including mercury, cadmium, and lead) in its proposed regulations under section 112.

Response: EPA does not read section 129 as precluding EPA from promulgating an interim section 112 (d) standard for portland cement kilns which burn non-hazardous solid waste. The interim alternative is to have no regulation at all for HAP emissions. This is because the only rules implementing section 129 explicitly do not apply to waste-burning cement kilns (see 40 CFR sections 60.50b(p), 60.32b(m), 60.50c(g) and 60.32e(g)) and the explanation for these provisions in 62 FR at 45117 (Aug. 25, 1997) and 62 FR at 48538 (Sept. 15, 1997)). Neither the commenter or any other person challenged these provisions, and EPA is not reopening the section 129 rules for consideration here.

EPA does not regard interim non-regulation of non-hazardous waste burning cement kilns as a reasonable alternative to including them within the scope of these portland cement MACT regulations. Indeed, were the Agency to exempt waste burning cement kilns from these MACT standards, it would create a strong incentive for cement kilns to burn waste to escape MACT regulation. EPA emphasizes, however, as we did at proposal, that the standards in today's rule do not represent EPA's final determination that only section 112 (d) standards are appropriate or required for solid non-hazardous waste-burning cement kilns. Today's action does not in any way foreclose an eventual section 129 standard.[1]

With regard to the commenter's suggestion that EPA adopt specific emission limits in this MACT rule for mercury, lead, and cadmium—which are pollutants identified in Section 129 for regulation—as EPA discussed at proposal, emission limits were considered in the MACT rule for these pollutants. As discussed at proposal, EPA was unable to identify a MACT floor for mercury. As a result, there is no mercury emission limit which can be associated with a MACT floor. The use of activated carbon injection (ACI) was considered by EPA as a ''beyond the floor'' alternative. However, as also discussed at proposal, based on the relatively low levels of existing mercury emissions from individual NHW cement kilns and the costs of reducing these emissions by ACI, EPA does not consider this beyond the floor alternative justified. Thus, no mercury emission limit is included in the final MACT rule, and thus would not be included even if this was a section 129 rule. Finally, as also discussed at proposal, EPA considers PM a surrogate for semi-volatile metals (e.g., lead, cadmium, etc.). The proposed rule and the final rule include a PM emission limit based on the use of MACT. As a result, the final rule achieves reductions in emissions of these pollutants consistent with MACT. Furthermore, sufficient data do not exist to identify emission limits for lead and/or cadmium associated with MACT and EPA is unable to establish emission limits for these pollutants in this rule. See *Sierra Club* v. *EPA*, no. 97–1686 (D.C. Cir. 1999) slip op. at 15 (EPA is not obliged to establish a MACT standard for HAPs for which the Agency is unable to quantify emission reductions). Even if such emission limits could be developed, however, they would not result in any further reduction in emissions beyond that achieved by the MACT rule, given the PM standard.

Comment: Other commenters believe that cement kilns, irrespective of their fuel or raw material mix, should be regulated under the portland cement NESHAP and not under section 129 of the Clean Air Act. Commenters stated that the EPA's discussion of its authority under section 129 is irrelevant to, and inappropriate in, the proposed portland cement NESHAP. They said that if EPA intends to regulate cement kilns that burn solid waste materials under section 129, the proper venue would be in a proposal pursuant to section 129. Commenters stated that, based on the discussion of section 129, EPA has apparently already determined how it intends to treat solid waste burning cement kilns in the section 129 rulemaking. Ten commenters were concerned that cement kilns could be subject to different regulations from year-to-year (or day-to-day) depending on whether they trigger the section 129 applicability thresholds. The commenters believe that such a regulatory structure is confusing, burdensome, inappropriate, and raises serious legal issues. Commenters noted that the EPA's proposed regulation of solid waste burning cement kilns under section 129 could lead to increased fuel consumption and emissions of greenhouse gases as cement kilns try to avoid triggering section 129 regulation by not burning alternative fuels like solid waste.

Response: The EPA acknowledges all the comments dealing with the potential future regulation under section 129 of the CAA of air emissions from cement kilns that burn solid waste (other than hazardous waste). Both the proposed and final promulgated portland cement NESHAP apply to cement kilns which burn solid waste (other than hazardous waste). If the EPA decides in the future that emission standards developed under the authority of section 129 of the CAA are warranted for cement kilns that burn solid waste, a separate rule will be proposed to allow for public comment. The commenters' concerns regarding duplicative regulations are misplaced, however. See CAA section 129(h)(2)

[1] Any waste burning cement kiln subject to a section 129 standard would no longer be subject to these section 112 (d) MACT standards. See CAA section 129 (h) (2).

(units can't be regulated simultaneously under both sections 129 and 112(d)(2)).

Regulation Under 112(c)(6)

Comment: Commenters stated that the EPA should not exercise its authority under section 112(c)(6) to regulate dioxin/furan emissions from area sources since the area sources have *de minimis* dioxin/furan emissions and regulating them under section 112 will impose significant burdens (for reporting, recordkeeping, monitoring, and control technology) while providing negligible environmental benefits. These commenters further state that EPA's own estimates indicate D/F emissions from NHW kilns contribute only 0.8 percent of total nationwide D/F emissions. The commenters do not believe that Congress intended such a result in drafting section 112(c)(6).

Response: Regarding the above comments about regulation of D/F under section 112(c)(6), the EPA is required by section 112(c)(6) to ''list categories and subcategories of sources assuring that sources accounting for not less than 90 per centum of the aggregate emissions of each such pollutant are subject to standards under subsection (d)(2) or (d)(4) of this section.'' The method for identifying and selecting sources for listing and regulation under these subsections was discussed at length in **Federal Register** notices published on June 20, 1997 (62 FR 33625) and April 10, 1998 (63 FR 17838). Section 112(c)(6) does not provide for de minimis exemptions for source categories, but rather directs EPA to make findings on the basis of what is necessary to meet the requirement to assure that sources accounting for 90 percent of the emissions of these pollutants are subject to standards. Moreover, because the pollutants addressed by section 112(c)(6) are persistent, that is, they remain in the environment for extremely long periods of time without breaking down, the EPA believes that any claims of de minimis contributions should be considered with great caution, and granted in only very exceptional circumstances. Consequently, the EPA believes that its decisions in response to section 112(c)(6) represent a reasonable exercise of its discretion within the constraints of that subsection.

Comment: Several commenters stated that EPA's proposed action to regulate cement kiln ''area sources'' under CAA section 112(c)(6) violates the CAA and is arbitrary and capricious. They stated that the EPA has improperly proposed to apply the MACT standards to area source cement kilns and other HWCs before deciding upon listing criteria and preparing the overall list or lists of sources required by that provision. In referring to EPA's proposal to regulate area sources of 112(c)(6) pollutants, they stated their view that only those 112(c)(6) pollutants for which a source category is listed under 112(c)(6) should be regulated.

Response: Regarding the initial portion of the above comment, the notice of the final source category listing for section 112(d)(2) rulemaking pursuant section 112(c)(6) requirements was published April 10, 1998, in 63 FR 17838–17855. The referenced notice provides the required listing of area sources, and therefore the commenter's point is moot.

The proposed rules for NHW kiln portland cement manufacturing would only have regulated area sources for D/F emissions, which is one of the pollutants for which these plants are listed as area sources. The pollutants for which portland cement NHW kilns were listed under 112(c)(6) are polycyclic organic matter (POM), D/F, and mercury. At proposal, the EPA had conducted an analysis under section 112(d)(2) for D/F and mercury with respect to establishing emission standards, and concluded that area sources of D/F should be regulated. The analysis for mercury showed that the MACT floor for new and existing sources was no control. The BTF technology, use of activated carbon injection, was determined not to be cost-effective. Therefore, no emission standard was proposed for mercury.

The preamble for the proposed rule stated that POM emissions (using THC as a surrogate) from portland cement NHW kiln area sources would be subject to MACT standards under EPA's interpretation of section 112(c)(6). A THC emission standard was proposed for new raw material dryers and new NHW in-line kiln/raw mill main exhausts at cement plants that are major sources. At proposal, THC was identified as a surrogate for organic HAP emissions, which would include POM. The final rule's limits on THC emissions are applicable only to new greenfield kilns, in-line kiln raw mills, and raw material dryers, for reasons discussed in section IV.C. of this preamble. EPA is clarifying today that since THC is a surrogate for POM, the THC emission limits are applicable to new greenfield kilns and raw material dryers at cement plants that are major and area sources.

Comment: Several commenters stated their support for an alternative interpretation of regulating area sources emitting HAPs listed under 112(c)(6). They stated that section 112(d)(5) does not exclude area source categories listed pursuant to section 112(c)(6) from the Agency's discretionary authority to apply GACT standards nor does section 112(c)(6) prohibit EPA from exercising its discretionary authority under section 112(d)(5). According to the commenters, section 112(d)(5) grants the Administrator authority to establish GACT standards for any area sources listed pursuant to section 112(c), whether such sources are listed pursuant to section 112(c)(3) or (c)(6). They contended that had Congress intended to exclude section 112(c)(6) area sources from the GACT standards under section 112(d)(5), Congress would have stated this exclusion in section 112(d)(5).

Another commenter argued against the alternative interpretation owing to the bioaccumulation potential of the 112(c)(6) pollutants and the fact that the GACT approach would include no floor analysis or residual risk assessment.

Response: Section 112(c)(6) specifically states that EPA is to assure that sources of the pollutants to which this subsection applies be subject to standards under subsections (d)(2) or (d)(4). These subsections refer, respectively, to MACT and standards for pollutants for which a health threshold has been established (a null set of purposes for this rule). The natural reading of the provision (and at the least, a permissible one) is to say that MACT standards apply to emissions of 112(c)(6) HAPs from all sources. The alternative reading, that GACT requirements could apply because GACT requirements apply in lieu of section 112d(2) MACT requirements reads language into section 112c(6) not apparent on its face. Moreover, where Congress wished to reference subsection (d) without limitation, it omitted references to specific paragraphs. Compare the language of section 112(c)(6), which refers to standards under subsection (d)(2) or (d)(4), with the language of section 112(k)(3)(B)(ii), which refers to standards under subsection (d). In addition, the reading suggested by the industry commenters goes against the natural purpose of section 112c(6), namely, to assure that the maximum available control technology is applied to control the emission of the most dangerous HAPs. (This is also the thrust of the comment summarized above criticizing the reading suggested by industry commenters. EPA agrees with this comment.) The Agency has therefore concluded that none of the comments provided compelling facts or arguments to overcome the interpretation that section 112(d)(2) specifically refers to MACT standards.

Regulatory Flexibility Act and the Small Business Regulatory Enforcement Fairness Act

Comment: Several commenters stated or supported the belief that the proposed rulemaking was incorrectly certified, contending that no factual basis was provided for the Agency's certification of no significant impact on a substantial number of small entities, and thus, EPA is not in compliance with provisions of the Regulatory Flexibility Act (RFA), 5 U.S.C. 601 *et seq.* They stated that EPA needs to review its certification and provide a factual basis for it or complete an initial regulatory flexibility analysis, as required by the RFA.

The commenters contended the certification was deficient in that the Agency's guidance allows regulators to bypass a regulatory flexibility analysis if the industry has fewer than 100 firms. Furthermore, the seven small companies, representing 16 percent of the total number of affected companies, constitutes a ''substantial number.'' Some commenters also stated their concern that even at a less than one percent cost-to-sales ratio effect on small businesses there could be a significant economic impact. Another commenter stated that EPA had not evaluated ''reasonable worst case'' impacts for any single plant. Several commenters requested more information regarding EPA's assessment of small business impacts and steps taken to minimize the impacts.

Response: The following discussion responds to the small business impact issues raised by the commenters. In accordance with the RFA, the Agency conducted a small business assessment and based its finding of ''no significant impact on a substantial number of small entities'' on the reported impacts of the proposed NESHAP on small businesses within the cement industry (Docket Item II–A–46, Table 4–7; Docket Item IV–C–15). The Agency did not intend to suggest that this certification was based solely upon the number of small businesses potentially affected by the rule, nor that the Agency sets thresholds for determining whether a particular number of businesses is a substantial number or a particular impact is a significant impact. The EPA did not certify that the rule would have no significant impact on a substantial number of small firms based solely on there being less than 100 firms subject to the rulemaking (Docket Item II–C–14). To clarify the factual basis of EPA's determination and address subsequent comments, a summary of the Agency's small business assessment is provided below.

Based on SBA-defined small business criteria, the Agency originally identified nine of the 44 companies within the U.S. cement industry as small businesses, or roughly 20 percent of total. However, based on updated information and changes in ownership since 1993, the Agency determined that four of these companies should not be considered small businesses. The APCA indicated that there are currently seven small businesses within this industry. This list includes the remaining five identified by the Agency plus Dacotah Cement and Royal Cement Company. Dacotah Cement is owned by the State of South Dakota and, thus, was not considered a small business by the Agency. Royal Cement Company began operations in 1995 after the Agency had completed its small business assessment and, thus, was not included in the Agency's small business assessment because EPA's engineering and economic data base did not contain information on this relatively new facility.

The Agency typically uses the cost-to-sales ratio as a measure of impact on small businesses. This ratio refers to the change in the annual control cost divided by the annual revenue generated from sales of the particular good or goods being produced in the process for which additional pollution control is required. It can be estimated for either individual firms or as an average for some set of firms such as affected small companies. While it has different significance for different market situations, it is a good rough gage of potential impact. In this case, to develop the cost-to-sales ratios, the Agency used the estimated control costs specific to the kilns operating at each manufacturing plant owned by a small business divided by their baseline cement sales. Contrary to industry's comments, the cost-to-sales measure of impact used by the Agency is a conservative approach and may, in fact, overstate the regulatory burden on small businesses for two reasons: (1) The Agency's sales estimate understates company sales because it only reflects cement operations and most companies have other vertical or horizontal business lines; and (2) this measure does not account for the expected market adjustments, i.e., increase in market prices that can potentially offset a portion of the regulatory costs.

For the economic impact analyses, the regulatory control costs were input to an economic model to predict outcomes at the market and plant level, including the impacts for markets served by manufacturing plants owned by small businesses. As shown in Table 4–7 of the EIA report (Docket Item II–A–46), the Agency did not project any plants or kilns owned by the original nine small businesses to close as a result of the proposed NESHAP.

As summarized in the Agency's June 10, 1998, letter to industry (Docket Item IV–C–15), a second small business assessment was conducted for the small businesses identified by the APCA. The weighted average cost-to-sales ratio for these small businesses was 0.93 percent with no plants or kilns projected to cease operations (Docket Item IV–B–5).

A third small business assessment was conducted to include the cost of PM CEMs and the monitoring of materials handling operations. (The promulgated rule requires the installation of PM CEMs, and more frequent monitoring of materials handling operations than included in the proposed rule. See Section IV and this section for further discussion of these requirements). The new weighted average cost-to-sales ratio for the small businesses was 1.4 percent with no plants or kilns projected to cease operations. See Docket Item IV–B–11 for the resulting company-specific cost-to-sales ratios for this third analysis. Further, to measure the relative regulatory burden on small businesses, these impacts at small businesses can be compared to those for the whole industry. See Docket Item IV–A–4 for this comparison.

As discussed above, based on the Agency's revised small business impacts assessments, which now include the cost of PM CEMs and other monitoring costs not considered at proposal, the Agency concludes that this NESHAP as promulgated today will not have a significant impact on a substantial number of small businesses. Nevertheless, EPA will reassess, as appropriate, small business impacts in the future proposed rulemaking that will establish the date that PM CEMs must be installed on NHW cement kilns.

Comment: One commenter stated that EPA must have objective, reasonable certainty that there will be no pertinent impacts on small entities or it cannot validly certify. The EPA must create a testable record against which the validity of certifications could be judicially reviewed. 5 U.S.C. 611(a) and (b). The commenter further claimed that EPA's SBREFA Guidance states that when EPA ''cannot or does not certify that a proposed rule will not have a significant impact on a substantial number of small entities, it must prepare a regulatory flexibility analysis for the proposed rule.'' The commenter

does not believe EPA has met this burden for the proposed rule.

Response: Section 605(b) provides an exemption from the requirements in sections 603 and 604 to conduct a regulatory flexibility analysis when the Agency ''certifies that the rule will not, if promulgated, have a significant economic impact on a substantial number of small entities.'' The EPA has made this certification for the rulemaking. The EPA believes its interpretation of the requirements of the RFA is reasonable and that its factual basis for certification is also reasonable.

To the extent that the commenter is suggesting that the RFA requires more than a reasonable basis for its decision to certify, the EPA disagrees. Courts review compliance with the RFA in accordance with Chapter 7 of the Administrative Procedure Act (APA), 5 U.S.C. 701, *et seq.* See 5 U.S.C. 611(a)(1) and (2). Under the APA, courts generally provide substantial deference to agency decisionmaking and will only set aside administrative actions or findings if the court concludes that the agency's action or finding was arbitrary, capricious, or otherwise contrary to law. 5 U.S.C. 706(2)(A). The Supreme Court has explained, ''To make this finding the court must consider whether the decision was based on consideration of the relevant factors and whether there has been a clear error of judgement.'' *Citizens to Preserve Overton Park* v. *Volpe,* 401 U.S. 415 (1971). The EPA believes that its detailed economic analysis more than adequately supports its conclusion that the rule will not result in a significant impact on a substantial number of small entities.

Comment: The same commenter believes SBREFA can only be interpreted to allow numerical cutoffs based on the percentage of all small entities in the regulated universe that experience any impact. The commenter contends that when a rule impacts all the small entities in an industry, the statute a fortiori requires an analysis of whether those impacts are significant, and precludes a certification based solely on any absolute number of small entities impacted. By the same token, if the percentage of small entities experiencing any impact is more than *de minimis,* a similar analysis appears required. The commenter contends that this concept has been repeatedly recognized by EPA findings that impacts on more than 20 percent of the small entities within a universe proposed to be regulated constitute a ''significant number.'' 61 FR 48206, 48228 (September 12, 1996); 59 FR 62585, 62588 (December 6, 1994). It also lies at the heart of the ''impacts'' matrix in EPA's SBREFA Guidance. The commenter notes that under that matrix, greater ''impact'' priority is assigned to rules that will impact a larger percentage of small entities, even if the impacts are relatively low.

Response: Other than small entities, the RFA does not define the term, or any part of the term, ''significant impact on a substantial number of small entities.'' Thus, the statute does not specify whether an agency may properly certify a rule either because there is not a significant impact on small entities, or because, even if the impact is significant, there are not a substantial number of small entities affected. In any event, the EPA has chosen not to establish any mechanistic approach for determining when an impact is significant or when the number of small entities is substantial. Instead the EPA considers a variety of approaches depending on the particular circumstances of the rulemaking. In general, the EPA looks at both the extent of the potential impact and the number of small entities impacted to decide whether a more detailed regulatory flexibility analysis pursuant to sections 603 and 604 of the RFA is warranted. The EPA's Guidance repeatedly explains that the criteria offered in the Guidance cannot be applied mechanistically and that rule writers should consider other relevant information in deciding whether or not to certify a rule.

EPA's analysis of both the number of small entities impacted and the extent of that impact are described in previous responses in this section of this preamble, and as indicated above, the EPA has not certified this rulemaking based solely on the number (or percentage) of small entities.

Economic Impact Analysis

Comment: Several commenters believe that the final EPA economic analysis at proposal was inaccurate and should be either revised to reflect industry's comments (in Attachment G to docket item IV–D–26) or withdrawn. Another commenter stated that EPA's model economic impacts data are seriously flawed because:

1. The model would not detect company-level impacts.

2. The economic analysis is not based on any estimate or analysis of actual small-entity impacts but is based on an aggregated industry wide economic model based on theoretically constructed model kilns.

3. The model predicts that older smaller dry kilns will close, which is counterintuitive because wet kilns are substantially more costly to operate per unit of product.

4. Flaws in the market-specific part of the model which lead directly to the modeled conclusion that profits will increase with more stringent control.

Response: The EPA disagrees with the preceding comments suggesting the analysis is inaccurate and should be withdrawn. The Agency developed its economic analysis based on the best available information using an accepted approach firmly rooted in economic theory to provide the necessary impact results to satisfy legislative and administrative requirements. Furthermore, the Agency conducted a revised economic impact analysis in response to the additional monitoring requirements for cement kilns and materials handling operations at major source cement plants (as fully described in Appendix G recently added to the July 1996 EIA report, Docket Item II–A–46). In conducting this revised analysis, the Agency also updated the original 1993 baseline information that supported the economic analysis for proposal to 1995 and is thereby consistent with the baseline used by the Agency for the Cement Kiln Dust (CKD) rulemaking and Hazardous Waste Combustion MACT Standards. This adjustment to the baseline characterization results in some differences in the projected economic impacts from the proposal analysis. In particular, under 1995 baseline conditions, the model predicts an aggregate loss in industry profits because of the sharp reduction in excess U.S. cement capacity from 1993 to 1995. This increase in capacity utilization to roughly 94 percent in 1995 severely limits the ability of unaffected (and slightly affected) domestic producers to offset production declines at affected cement plants. As a result, the potential profit gains to these producers from offsetting these reductions is no longer present in 1995 as in 1993 and the economic model predicts an aggregate loss in pre-tax earning of the U.S. industry, which is consistent with the expectations of the commenter. However, this occurs through the difference in baseline characterization rather than flaws in the Agency economic model and approach.

The following responses address the above comments that are specific to the economic analysis conducted for the regulation as originally proposed. First, the comments are specific to a draft version of the EIA report that has been revised. Comments were addressed in changes to the analysis prior to proposal as follows:

1. As the commenter suggested, the economic model incorporated a more realistic assumption for the elasticity of supply from foreign imports.

2. According to the commenter the draft EIA report did not adequately describe the basis for defining the regional markets used in the economic analysis and led to some confusion and/or misinterpretation by the industry as reflected in its comments. Contrary to assertions, the Agency's economic model does not omit any market areas as all U.S. production and consumption of cement is accounted for within the 20 regional markets as defined by the Agency. The Agency utilized the best available information in defining regional markets to better account for the regional competition within the industry.

3. The commenter claimed the draft EIA report did not adequately describe the basis for selecting the imperfectly competitive market structure for the cement industry and the implications of this selection of the economic impact results. The Agency's selection of market structure was not an attempt to distort the economic impact results or to infer that the industry is collusive and lacks any competition. Rather it was selected to provide better estimates given well-known characteristics of the industry. The Agency has appropriately modeled the competitive interaction between domestic producers of cement as well as foreign imports (where applicable) within each regional market in a manner that is consistent with the empirical evidence for cement markets and economic theory.

In regard to the statement that the economic impact data are flawed and accompanying reasons, the Agency responds as follows:

1. The economic impact analysis does allow the Agency to detect company-level impacts by aggregating the estimated control costs and related economic impacts at all manufacturing plants owned by each company, both large and small. Although the issue of capital availability is an important consideration for small businesses, it is not typically addressed in EPA economic analyses of regulatory actions as it requires company-specific information not available to the Agency and, moreover, there is not a generally accepted method with which to model and analyze this complex issue in the context of environmental regulation.

2. The Agency's characterization of costs at individual kilns was based on the econometric estimation of cost functions for cement kilns by Das (1991 and 1992). Using the best information available, the EPA made adjustments to these cost functions to better reflect the operating costs of kilns by process type and capacity (as fully described in Appendix C, Docket Item II–A–46). However, in accounting for size or economies of scale in estimating baseline operating costs, the Agency was limited by the two capacity size classifications of less than and greater than 500,000 short tons per year for which labor productivity and fuel consumption were reported by the Portland Cement Association. This data limitation prevents the EPA from developing baseline cost functions for very small kilns and, effectively, ''lumps smaller kilns in with mid-size kilns into a larger class'' of all kilns as stated by industry. Therefore, it is possible that the EPA's economic model understates the baseline operating costs at very small kilns. However, the Agency is able to estimate the incremental compliance costs for many categories of kiln capacity below 500,000 short tons per year ranging from 55,000 to 450,000 short tons per year. This more detailed classification scheme for estimating the regulatory compliance costs reduces the uncertainty related to the Agency's estimates of kiln closures.

3. The Agency agrees with the industry comment that wet kilns are generally more costly to operate, which has contributed to their use of hazardous waste to reduce their fuel costs and remain competitive with the dry process kilns, especially those using precalciner and/or preheater technologies. However, the economic impacts of the proposed NESHAP depend not only on the baseline costs of cement production but also on the incremental costs of compliance for each kiln. The proposed NESHAP largely impacts non-hazardous waste burning kilns as opposed to hazardous waste kilns that are most often wet process kilns. As stated in the EIA report, it is the higher relative incremental cost impact compared to that for its competitors that causes the Agency's model to project closure for two dry process kilns under the proposed NESHAP. Furthermore, the baseline costs of cement production were high for these kilns because they were each older and smaller than average. Thus, the projected closures are actually consistent with the commenter's statement that older and smaller kilns are more vulnerable to closure with regulation. Moreover, in the final EIA report, the Agency provides closure estimates for additional regulatory alternatives and, for more stringent ''above-the-floor'' alternatives, the economic model projects up to 10 kilns to close including 5 wet process kilns. Thus, the Agency believes that its economic model produces closure estimates that are consistent with the commenter's characterizations.

4. Although the Agency projects a net increase in profits for the cement industry as a whole in response to regulation, there is a ''social cost'' to reducing hazardous air emissions from the manufacture of cement. As shown in the final report, the Agency estimates that society must give up $34.5 million per year for the expected environmental benefits (as compared to the $28.8 million in regulatory compliance costs incurred by industry after market adjustments). Furthermore, factors cited by industry are not the reason for the model's prediction of a net increase in profits for the industry as a whole. The Agency believes that it has appropriately modeled the competitive interaction between domestic producers of cement as well as foreign imports (where applicable) within each regional market in a manner that is consistent with the empirical evidence for cement markets and economic theory.

Related to the net increase in profits for the industry as a whole, several commenters were surprised that the economic analysis predicts an increase in cement plants' pretax earnings. They interpreted this as applying to individual plants, which is a misinterpretation. The economic analysis projects a net increase in the U.S. cement industry's pre-tax earnings, which reflects profit gains at unaffected or relatively less affected cement plants and profit losses at affected plants that incur higher relative compliance costs. Thus, the commenter's statement that each cement plant's pre-tax earnings will increase by X dollars for every dollar spent on compliance is incorrect as these impacts are distributed across different plants. Also, the estimated price increase applies to all cement produced by U.S. manufacturing plants whereas the MACT compliance costs apply only to cement produced at affected plants. Therefore, the commenter's calculation of the projected price increase as a share of MACT compliance costs is also incorrect as the commenter is understating the relevant change in cost by dividing the MACT compliance costs by all cement produced rather than only the affected share of cement production. The projected increase in pre-tax earnings is a net result for the industry that results from losses at some cement plants that are offset by gains at other cement plants.

PM CEMs

Comment: Numerous comments were received stating that the EPA has not fully considered the impacts of a potential requirement for PM CEMS applied to NHW kilns, and that PM CEMs have not been adequately demonstrated on cement kilns.

Response: In the preamble to the proposal, EPA noted its intent to include a requirement for PM continuous emission monitoring system (CEMS) in the final rule, unless the analysis of existing or newly acquired data and information showed that it is not appropriate (see 63 FR at 14205). Based on successful testing on an incinerator conducted in the interim, as well as extensive use of these monitors in Europe, EPA believes there is sound evidence that PM CEMS should work at cement kilns. In addition, preliminary analyses of the cost of PM CEMS applied to cement kilns (docket items IV–C–1 and IV–C–21) and hazardous waste combustors (HWC) suggest that these costs are reasonable. Accordingly, the final rule contains a requirement to install PM CEMS. However, we agree with comments that indicate a need to develop cement kiln-specific performance requirements for CEMS and to resolve other outstanding technical issues. These issues include all questions related to implementation of the CEM requirement (i.e. relation to all other testing, monitoring, notification, and recordkeeping), relation of the CEM requirement to the PM emission standard, as well as technical issues involving performance, maintenance and correlation of the CEM itself. These issues will be addressed in a subsequent rulemaking. Therefore, we are deferring the effective date of this requirement pending further testing and additional rulemaking. As a result, in today's final rule, EPA is requiring that particulate matter continuous emission monitoring systems (PM CEMS) be installed at cement kilns. However, since the Agency has not finalized the performance specifications for the use of these instruments at cement kilns or resolved some of the technical issues noted above, we are deferring the effective date of the requirement to install, correlate, maintain and operate PM CEMS until these actions can be completed. The PM CEMS installation deadline will be established through future rulemaking, along with other pertinent requirements, such as final Performance Specification 11, Appendix F Procedure 2. It should finally be noted that EPA has a concurrent rulemaking process underway for hazardous waste combustors (HWC) and plans to adopt the same approach in that rule.

EPA also is taking action now to avoid facilities being in violation of the PM standard during CEM correlation testing. Commenters properly observed that CEM correlation testing would require sources to manipulate their PM control device during correlation tests to obtain higher PM emissions levels than the emission limit. It is necessary to do so because a good PM CEMS correlation must include CEMS and manual method data above the stated emission standard in order to have a wide enough range of data to meet the correlation coefficiency statistical requirement and to assure that calibrated readings above the level of the emission standard can be properly interpreted. Such data, however, could be misconstrued by state or local enforcement authorities or citizens as violations of the PM standard. It is important to address this issue now to encourage the development of additional PM CEMS data, and not to discourage facilities from choosing to install a CEM before the deferred effective date.

We are addressing this concern here in the same manner we plan to address it in the HWC MACT rule by providing that the particulate matter and opacity standards of parts 60, 61, 63 (i.e., all applicable Parts of Title 40) do not apply during particulate matter CEMS correlation testing, provided that you comply with certain provisions discussed below that ensure that the provision is not abused. EPA is also making this provision effective immediately, so that sources need not wait for the compliance date to take advantage of this particulate matter CEMS correlation test provision. We believe this approach adequately addresses commenters' concerns.

The temporary exemption from particulate matter and opacity standards is conditioned on several requirements. Sources are required to develop and submit to permitting officials a PM CEMS correlation test plan along with a statement of when and how any excess emissions will occur during the correlation tests (*i.e.*, how you will modify operating conditions to ensure a wide range of particulate emissions, and thus a valid correlation test). If the permitting officials fail to respond to the test plan in 30 days, the source may proceed with the tests as described in the test plan. If the permitting officials comment on the plan, the source must address those comments and resubmit the plan for approval. In addition, runs that exceed any PM or opacity emission standard are limited to no more than a total of 96 hours per correlation test. This 96 hours is sufficient time for a source to increase emissions to the desired level and reach system equilibrium, conduct testing at the equilibrium condition followed by a return to normal settings indicative of compliance with emissions standard(s) after those higher emissions data have been obtained, and return to equilibrium at normal conditions. Finally, to ensure these periods of high emissions are due to the bona fide need described here, a manual method test crew must be on-site and making measurements (or in the event some unforeseen problem develops, prepared to make measurements) at least 24 hours after you make equipment or workplace modifications to increase PM emissions to levels of the high correlation runs.

Selection of Emission Limits in General

Comment: One commenter stated that according to section 112(d) EPA may not base the floors of its emission standards on a particular technology. Instead, emission standards for existing sources must be no less stringent than ''the average emission limitation achieved by the best performing twelve percent of the existing sources'' (for which EPA has data). The commenter further stated that for new sources, standards must be based on the emission control that is achieved in practice by the best controlled similar source. Thus, the standards proposed for emissions of dioxins, mercury, total hydrocarbons, and hydrogen chloride are not valid.

Response: First, it should be noted most of the commenter's points were recently rejected by the DC Circuit in *Sierra Club* v. *EPA* (March 2, 1999). That case holds that because MACT standards must be achievable in practice, EPA must assure that the standards are achievable ''under most adverse circumstances which can reasonably be expected to recur'' (assuming proper design and operation of control technology). Slip op. p. 13. The case further holds that EPA can reasonably interpret the MACT floor methodology language so long as the Agency's methodology in a particular rule allows it to ''make a reasonable estimate of the performance of the top 12 percent of units'', slip op. p. 7; that evaluating how a given MACT technology performs is a permissible means estimating this performance, id. at 13; and that new source standards need not be based on performance of a single source, id.

Second, the commenter provided no additional emissions data for any pollutant. The EPA has selected emission limits at the floor level of

control. Section 112(d) requires EPA to promulgate emission standards based on what is determined to be achievable through the application of techniques, methods, etc. The rule does not require the use of any specific technology to meet the emission standard. The emission standards are based on the emissions levels achieved through the application of MACT floor technologies and account for variation in the process and in the air pollution control device effectiveness.

Although the commenter did not specifically mention PM, the following discussion using PM as an example will help clarify EPA's approach in setting MACT standards for this source category. The EPA evaluated the PM MACT floor technology for both existing and new sources at proposal and determined that the MACT floor technology is properly designed and operated FFs and ESPs. Commenters provided no data to suggest that a particular design or operating mode, or an alternative technology could achieve a lower level of PM emissions on a consistent basis. Nor did EPA identify other technologies for existing or new kilns or in-line kiln/raw mills that would consistently achieve lower emission levels of PM than the NSPS limit.

As discussed in docket item number IV–B–10, the data upon which the MACT floor was based were obtained from EPA Method 5 compliance tests on kilns subject to the NSPS and represent performance of PMCDs associated with new kilns over a relatively short period (typically three 1-hour test runs). These test data were obtained at kilns equipped with well designed and operated ESPs and FFs representative of the MACT floor, which is also represented by the NSPS emission level. Method 5 testing of these cement kilns equipped with MACT floor technology showed a range of emissions up to the NSPS level. Additional Method 5 tests performed on some of the same kilns included in the MACT floor analysis showed PM variations after control as plotted in docket item IV–B–10. EPA believes that the data base—which shows cement kilns with properly designed and operated fabric filters and electrostatic precipitators achieving levels up to and including the NSPS level—adequately accounts for the variability inherent in the air pollution control technologies, and indicates what PM levels are consistently achievable in practice. See Sierra Club, slip op. p. 13. In summary, the PM emission limit reflects an emission level consistently achievable with the use of well designed and operated MACT floor technology.

The emission standard for dioxin is based on the emission level achievable through the application of the MACT floor control technology, which is exhaust gas temperature control at the inlet to the PM control device to less than 400° F, and efficient combustion. Based on data evaluated at proposal, the technology can be represented by the dual standard of 0.2 ng TEQ/dscm or 0.4 ng TEQ/dscm with a PM control device inlet temperature of 400° F or less. Since the commenter provided no additional data, the EPA has reviewed, in response to this comment, the existing test data and literature on D/F formation and concluded that the selected emission limits are consistently achievable and represent the MACT floor. Similar to the discussion above regarding the PM data, the D/F performance test data are based on short-term tests of facilities using the MACT floor technology. Thus the proposed emission limits are retained and account for normal, inherent process and air pollution control operating variability, including the use of various fuels.

As discussed in the proposal preamble, there are no standards for THC emissions from existing sources because the MACT floor for control of THC for existing sources is no control. Further, the BTF control technique for existing sources, and a floor control for new sources, would be based on the performance of precalciner/no preheater technology. However, as discussed in the proposal, EPA rejected this technology as a basis for setting THC emission limits because of the technology's negative environmental and energy impacts. The basis for the THC limit for new greenfield kilns is site selection to ensure low hydrocarbon content in feed materials. (In the proposal, the THC limit applied to all new kilns, but based on comments received, the rule has been changed such that the THC limit will only apply to new greenfield kilns. See comment responses regarding this issue for more detail.) As discussed in the proposal, this option is not available to existing (and new brownfield) kilns, in that facilities are generally tied to existing raw material sources in close proximity to the facility, so that raw material proximity (*i.e.*, transportation cost) is usually a major (indeed, critical) factor in plant site selection.

As discussed in the proposal preamble, no standards are being adopted for Hg and HCl because the MACT floor has been determined to be no control and the BTF controls were not cost effective (docket item II–B–67).

This standard was developed under section 112, not section 129, so there is no statutory requirement to establish standards for individual HAP metals. However, control of cadmium, lead, and other non-volatile and semi-volatile metal HAPs is achieved via the floor level-based emission limit for PM, which serves as a surrogate for the non-volatile and semi-volatile metals. This is supported by data from coal-fired electric utility boilers which show relatively high HAP metals (except mercury) removal with fabric filters and electrostatic precipitators. (Study of Hazardous Air Pollutant Emissions from Electric Utility Steam Generating Units—Final Report to Congress, volume 1, 453/R–98–004a, February 1998, p. 13–23 and 13–26).

PM Limits

Comment: Numerous commenters supported the use of PM as a surrogate for non-volatile HAP metals. One commenter questioned the use of PM as a surrogate for HAP metals, and suggested that the EPA require stack testing for specific metal content.

Response: The final rule retains the use of PM as a surrogate for HAP metals because the MACT floor equipment and level of control for HAP metals, *i.e.*, properly designed and operated fabric filters (FFs) and electrostatic precipitators (ESPs), is identical to that for PM. Using PM as a surrogate for specific HAP metals eliminates the cost of performance testing to comply with numerous standards for individual metals, and achieves exactly the same level of HAP metal emissions limitation.

Comment: Although many commenters were in favor of the MACT floor determination and associated emission limit for PM (see docket item, number to be assigned), several other commenters suggested that more stringent PM standards were required in recognition of the performance test data presented in the preamble showing that many affected sources achieved lower levels of PM emissions than the proposed standard.

Response: The proposed PM standards have been retained in the final rule. EPA evaluated the MACT floor technology for both existing and new sources at proposal and determined that the MACT floor technology is properly designed and operated FFs and ESPs. Commenters provided no data to support that an alternative design or technology represents a floor that could achieve a lower level of PM emissions on a consistent basis. The EPA did not identify other technologies for existing or new kilns or in-line kiln/raw mills that would consistently achieve lower emission levels of PM than the NSPS limit.

As discussed in the proposal preamble, the data upon which the MACT floor was based were obtained from EPA Method 5 compliance tests on kilns subject to the NSPS and represent performance of PMCDs associated with new kilns over a relatively short period (typically three 1-hour test runs). These test data were obtained at kilns equipped with well designed and operated ESPs and FFs representative of the MACT floor, which is also represented by the NSPS emission level. Method 5 testing of these cement kilns equipped with MACT floor technology showed a range of emissions up to the NSPS level. Additional Method 5 tests performed on some of the same kilns included in the MACT floor analysis showed PM variations after control as plotted in the reference, confirming that some operating variability is inherent. EPA believes that these data reasonably represent levels achievable in practice by the average of the best performing 12 percent of sources, and by accounting adequately for variability, further assure that the standard will be achievable under the worst forseeable circumstances consistent with proper design and operation. Sierra Club, slip. op. p. 13. In summary, the PM emission limit reflects an emission level consistently achievable with the use of well designed and operated MACT floor technology.

Comment: One commenter stated that it is feasible, both technically and economically, for portland cement kilns to use fuels and raw materials with low metals content. Because feed limits are an achievable measure that would further reduce emissions, EPA must require them.

Response: Feed and/or fossil-fuel switching has not been undertaken by any NHW kilns to reduce metals emissions, and therefore this is not a MACT floor option.

The use of feed material selection and feed material blending to achieve lower metals emissions thus is a potential beyond-the-floor technology. Cost is a consideration in the decision to go beyond-the-floor. The ability of a facility to remain cost competitive typically depends on the use of raw materials mined in close proximity to the facility. Several commenters described the economic difficulties in locating, purchasing, and transporting feed materials to existing sites; the comment to the contrary stated the opposite categorically, but provided no supporting cost, economic or technical data. See Sierra Club, slip op. p. 13 (rejecting argument that pollution prevention measures had to be included as part of a standard where costs were not adequately quantified). EPA disagrees with this comment. Cement kilns require enormous amounts of raw material, and the costs of transporting the raw material are enormous, given the volumes involved. Finding a new source of raw material will often (if not invariably) entail more costs because the source of the raw materials will be further from the facility. The Agency believes that in many cases a facility could not even remain economically viable were existing sources of raw material to become unavailable. In many cases, costs of the change in raw material would exceed air pollution benefits.[2]

In the case of NHW kilns, fuel switching is not a demonstrated metals control technology. There are no data available to EPA that indicate that this technology can or has achieved metals emission reductions from NHW kilns. A HW kiln operator can control metals via the hazardous waste fuel, but this is not an option available to NHW kiln operations.

D/F Limits

Comment: Several comments were received regarding the D/F limits in the proposed rule, which were based on the MACT floor. Some commenters suggested that a lower D/F emission limit was appropriate for both new and existing sources, based on the performance test data reported in the proposal preamble. Other commenters felt that the proposed emission limit was too stringent and unjustified, and was not representative of the MACT floor technology. Many other commenters supported the proposed standards.

Response: In response to these comments, the EPA has reviewed the existing test data and literature on D/F formation and concluded that the selected emissions limits represent the MACT floor and are consistently achievable. Again, EPA is influenced by the fact that cement kilns using the floor control technology achieved different D/F levels in their performance tests—indicating that different levels reflect normal variability of the process and control technology. Consequently, EPA is retaining the proposed standard for D/F emissions from kilns and in-line kiln/raw mills in the final rule.

In order to establish a more stringent emission limit for new kilns, it is necessary to identify a different technology to which better performance is attributable. Since EPA could not identify a different technology for new kilns, the standard is based on the range of available data, considering process and control variability.

The EPA determined that the MACT floor technology for both existing and new sources was inlet PM control device temperature control to 400° F accompanied by good combustion and process control. Based on data evaluated at proposal, the technology can be represented by the dual standard of 0.2 ng TEQ/dscm or 0.4 ng TEQ/dscm with a PM control device inlet temperature of 400° F or less. The performance test data are based on short-term tests but do indicate that all kilns will achieve the numerical emission limit of 0.4 ng TEQ/dscm with the application of the floor technology. Thus the 0.4 ng TEQ/dscm emission limit is retained to account for normal inherent process and air pollution control operating variability, including the use of various fuels, such as tires.

THC Limit

Comment: Several comments were received questioning the specification of a THC standard for reconstructed kilns or new kilns built at existing sites. Commenters asserted that these facilities could not economically locate, purchase and transport suitable feed materials to meet this standard.

Response: In recognition of these comments, the final rule has been changed to make the THC limitation applicable only to greenfield kilns, greenfield in-line kiln/raw mills and greenfield raw material dryers. EPA agrees that only greenfield sources would be able to apply MACT, which is the site selection of feed materials with low levels of naturally occurring organic material. The EPA considered the use of precalciner/no preheater kilns for THC control, (docket items II–B–47, II–B–48, II–B–67, and II–B–76), but concluded that because of negative energy impacts and increased emissions of criteria pollutants these did not provide the maximum achievable control technology for either existing or new sources. Further discussion of this technology is provided in the response to the next comment.

[2] As discussed above, EPA considered control of feed materials as a potential beyond the floor technology. EPA is aware of the Conference Report to the 1990 amendments which state that controls on feed materials are not to be part of MACT for mineral processing facilities. H.R. Rep. No. 952, 101st Cong., 2d sess. 339. However, the text of the statute does not reflect this legislative history, stating unambiguously that MACT for all sources includes eliminating HAP emissions through ''substitution of materials''. Section 112 (d) (2) (A). EPA is following the explicit statutory text in considering (albeit rejecting) feed control as a potential beyond the floor technology in this rule. At the very least, this is a permissible interpretation of the statute, given the statutory goal of protecting and enhancing of the Nation's air resources. Section 101 (b)(1).

Comment: Commenters stated that the proposed rulemaking provides no justification or insufficient support for the selection of 50 ppmvd as the total hydrocarbon (THC) standard for new or modified kilns. Another commenter noted that EPA has recognized that portland cement kilns use a variety of methods and technologies to control their THC emissions, including precalciner/no preheater technology and a combination of feed material selection, site location, and feed material blending. All of these methods and technologies are reflected in existing sources' actual performance, on which EPA must base the floors for its THC standard. That commenter stated that under section 112(d) the THC emission standard would be much lower than 50 ppmvd.

Response: First, with regard to the methods and technologies determined to be the MACT floor, the ''precalciner, no preheater'' kiln is not considered maximum achievable control technology when other considerations such as energy impacts and NO_X emissions are taken into account. As explained in the preamble to the proposed rule, EPA believes that use of these technologies would not be MACT for new or existing sources because of the adverse environmental impacts associated with these technologies' use, in particular increased emissions of certain criteria pollutants. See *Portland Cement Assn* v. *Ruckelshaus,* 486 F. 2d 375, 385–96 (D.C. Cir. 1973) (if use of a particular technology results in other, adverse environmental consequences, that technology need not be considered the ''best''). The proposal preamble also addressed consideration of feed material selection for existing sources as a MACT floor technology and concluded that this option is not available to existing (and new brownfield) kilns, in that facilities are generally tied to existing raw material sources in close proximity to the facility, and that raw material proximity (*i.e.,* transportation cost) is usually a major factor in plant site selection. This conclusion was supported by several commenters. The commenters described the economic difficulties in locating, purchasing, and transporting low organic feed materials to existing sites. However, for new ''greenfield'' kilns, feed material selection as achieved through appropriate site selection and feed material blending is considered new source MACT.

With regard to the level of standard, it is based upon data available to the Administrator and no data were provided after proposal which would justify a different standard. Based on a review of available information (docket item II–B–62, docket item II–B–75, docket item II–D–195) the EPA believes that a THC concentration of 50 ppmvd represents a level that is achievable nationwide across a broad spectrum of feed materials. This level has been retained in the final rule.

Comment: Comments were received concerning the suitability of THC as a surrogate for organic HAP, in light of the high variability in the ratio of organic HAP to THC in cement kiln exhaust gas.

Response: The EPA recognizes the variability of the data but concludes that when speciated analyses of THC were undertaken organic HAPs were found to be present. No attempt was made to correlate organic HAP emissions with THC emissions. Because of the cost savings to industry in conducting performance tests to establish compliance with a THC standard, EPA has chosen not to set standards for individual speciated organic HAPs. Further, since the source of organic HAPs is the same source as for THC (feed materials), using MACT will also control organic HAP emissions. Adopting THC as a surrogate will result in cost savings to the cement industry and to the EPA during compliance testing and monitoring.

The EPA notes further that the same issue was presented when EPA adopted standards for boilers and industrial furnaces burning hazardous waste, and in the course of that rulemaking, not only the Agency but the Science Advisory Board concluded that THC was indeed a reasonable surrogate for toxic organic emissions from cement kilns. [See 56 FR at 7153–54 (Feb. 21, 1991).]

The proposal preamble stated that POM, one of the seven pollutants listed in section 112(c)(6), would be regulated using THC as a surrogate. The final source category listing notice for section 112(d) rulemaking pursuant to section 112(c)(6) requirements shows the NHW kiln facilities portion of the portland cement source category to be a significant source of POM (63 FR 17838, April 10,1998). For this reason, and to control other THC HAPs, the final rule limits emissions of THC from new greenfield raw material dryers and new greenfield kilns and greenfield in-line kiln/raw mills at area sources as well as major sources.

Mercury Limit

Comment: Comments were received concerning the need for an emission standard to limit the emissions of mercury from NHW cement kilns. Other commenters suggested that a mercury standard be established based on a presumed floor or beyond the floor basis of fuel and/or feed material control, referring to the proposed Hazardous Waste Combustor rules and research on clean coal to reduce mercury emissions in the electric utility industry. Other commenters agreed with EPA's determination for no mercury emission limit.

Response: The EPA determined, at proposal, that the MACT floor for both new and existing sources was no control. The EPA evaluated activated carbon injection as a beyond the floor alternative for control of mercury emission from NHW kilns and in-line kiln/raw mills, and this technology was not found to be cost effective. Feed and/or fossil-fuel switching or cleaning has not been undertaken by any NHW kilns in order to reduce mercury emissions, and therefore these are not MACT floor options. For this reason feed and/or fossil-fuel switching or cleaning would be considered a beyond the MACT floor option but the EPA does not have data, nor did commenters provide data, that show that this option would consistently decrease mercury emissions. Moreover, as noted earlier, raw material feed control is prohibitively costly for this industry.

The proposed rule for Hazardous Waste Combustors included a standard of mercury. However, control of mercury in that rule would be based on controlling the amount of mercury in the hazardous waste fuel, not controlling raw material or fossil fuel. This approach is thus not available to NHW kilns. In addition, based on the Electric Utility Report to Congress on HAP emissions, EPA believes that fuel switching among different coals and from coal to oil would not consistently reduce HAP metal emissions from cement manufacturing plants. (Study of Hazardous Air Pollutant Emissions from Electric Utility Steam Generating Units—Final Report to Congress, volume 1, 453/R–98–004a, February 1998, pp. 13–1 through 13–5.) Therefore, this final rule establishes MACT for mercury as no control. However, EPA will be performing research and development work with the objective of finding more cost effective methods to reduce mercury air emissions from fossil-fuel fired electric utilities, and EPA will in the future consider whether any more cost effective methods may be appropriate as a basis for reducing mercury emissions from NHW cement kilns.

Hydrogen Chloride Limit

Comment: Comments were received stating the need for an emission standard for HCl emissions from kilns

because EPA did not provide data to show that HCl emissions pose no threat to public health and that HCl is emitted in large quantities from new and existing NHW kilns. Other commenters stated that EPA appropriately concluded that there is no basis for a MACT standard for HCl.

Response: With regard to the threat to public health comment, the EPA is conducting this rulemaking under section 112(d)(2) and therefore the decision on an emission standard is not based on health risk. Impacts to public health will be studied and addressed later under section 112(f) of the Act. The EPA determined, at proposal, that the MACT floor for both new and existing sources was no control. Further, no cost effective beyond the floor alternatives were identified. The commenters provided no new information on the use of any control technologies to limit emissions of HCl from NHW kilns. For this reason no emission standard is being established for HCl.

Opacity Limit

Comment: One commenter requested that EPA clarify the duration of both the performance test and continuous compliance demonstrations for opacity emissions.

Response: The opacity requirements in the final rule have been changed to provide for compliance on the basis of average opacity for each and every 6-minute block of operating time. This is consistent with the NSPS which is the MACT floor level of PM control upon which the standard is based. (The proposed rule incorrectly required a thirty-minute averaging time for demonstrating continuous compliance.)

Comment: Commenters expressed concern regarding the requirement to initiate a Quality Improvement Plan (QIP) and the need to track and statistically analyze opacities at levels below the standards. One commenter stated that a violation triggered by not initiating a QIP when the source was not violating an emission standard was extreme.

Response: The requirements for developing and implementing a QIP in response to a 15 percent kiln and in-line kiln/raw mill opacity trigger have been removed from the final rule. The final rule retains the opacity limit of 20 percent which if exceeded during any 6-minute period is a violation.

Comment: One commenter requested that EPA specify the scope of monitoring opacity from raw and finish mills.

Response: The EPA has clarified that the opacity limitation on gases discharged from raw mills and finish mills is restricted to the mill sweep and air separator air pollution control devices. This is consistent with the MACT floor technology for control of gases from these affected sources.

Comment: A commenter noted that the proposed rule did not specify under what conditions visual opacity monitoring should be conducted.

Response: The final rule clarifies that Method 9 (and Method 22) tests must be conducted under the highest load or capacity level reasonably expected to occur.

Comment: Numerous commenters expressed concern regarding installation, operation, calibration and maintenance of triboelectric bag leak detection systems, and that the lack of clear-cut specifications would lead to open-ended liability for owners/operators.

Response: The option for use of triboelectric bag leak detection systems for monitoring fabric filter performance is not being promulgated at this time. The EPA is presently considering this issue and may propose revised bag leak detector requirements for some source categories. Those owners or operators who want to use bag leak detection systems may petition the Administrator for approval of alternative monitoring requirements under the General Provisions.

The rule requires the owner or operator to monitor the opacity from raw mills and finish mills by conducting a daily six-minute test in accordance with Method 22, ''Visual Determination of Fugitive Emissions from Material Sources and Smoke Emissions from Flares.''

Owners or operators of raw mills and finish mills are required to initiate corrective action within one hour of a Method 22 test during which visible emissions are observed. A 30-minute Method 9 opacity test must be started within 24 hours of observing visible emissions.

D/F Monitoring

Comment: Several commenters suggested averaging periods for temperature limits shorter than 9 hours as proposed. One commenter preferred one-hour rolling averages. Two commenters preferred ten-minute averages as rationalized in the proposed Hazardous Waste Combustor Rule.

Response: As noted in section IV. Summary of Changes Since Proposal, the final rule, in response to these comments, has been changed to a shorter averaging period. The nine-hour block average period used for the monitoring of temperature (as well as the activated carbon injection rate, if applicable) has been changed to a three-hour rolling average period. The three-hour averaging time will help to limit disproportionate increases in D/F emissions that could be caused by very short periods of higher temperatures. A three-hour averaging time is reasonable because it is within the range of values the Agency could have selected, ranging from an instantaneous limit (i.e., no averaging period) up to a nine-hour averaging period.

The enforceable operating limit for gas stream temperature is derived from the temperature measured during 3 three-hour measurements of D/F emission. The three-hour rolling average temperature limit is established by taking the average of the one-minute average temperatures for each test run conducted during the successful Method 23 performance test, then averaging each test run average. Further, sources may petition the Administrator for an alternative averaging period or an alternative method for establishing operating parameter limits.

Comment: A commenter pointed out that the proposal would allow a source to conduct its D/F performance test with an inlet PM control device temperature below 400 degrees F, but after the performance test, the source would be allowed to operate its PM control device with an inlet temperature up to 400 degrees F.

Response: In drafting the proposal, the EPA did not intend to allow a source to operate its PM control device at a temperature higher than the temperature during the performance test, and so the EPA has clarified that the inlet temperature limit is established as and capped at the average temperature during the D/F performance test.

Comment: One commenter stated that the D/F standard should be coordinated with the rule for hazardous waste combustors.

Response: As was previously noted, the EPA has adopted a shorter temperature averaging time. To further achieve consistency with the D/F temperature requirements for HW kilns, the EPA is dropping the proposed provision which would have allowed the temperature limit to be established as the average temperature during the performance test plus 25 degrees F if the D/F level (during compliance testing) was below 0.15 ng/dscm. Further, new activated carbon injection operating parameters (nozzle pressure drop or carrier fluid flow rate) and averaging time have been added and changed, respectively, to be consistent with the requirements for the HW kilns.

Comment: A comment was received requesting a clarification of the

procedure for demonstrating compliance for in-line kiln/raw mills during time periods which span a change in raw mill operating status.

Response: After a transition period in which the status of the raw mill was changed from ''off'' to ''on'' or from ''on'' to ''off'', compliance with the operating limits for the new mode of operation begins, and the three-hour rolling average is established anew, i.e., without considering previous recordings.

Comment: Comments were received suggesting that combustion parameters (e.g., CO and THC) should be monitored to demonstrate compliance with the D/F standard.

Response: The final rule does not require monitoring of these parameters as a means of monitoring combustion because the EPA believes that THC and CO emissions from NHW cement kilns are largely due to formation outside of the combustion zone, i.e., due to the feed materials. Therefore THC and carbon monoxide emissions might not accurately reflect combustion conditions, therefore the EPA has not included CO monitoring requirements to ensure good combustion. However, the final rule has been changed to include a monitoring requirement for an inspection of combustion system components to be conducted at least annually.

THC Monitoring

Comment: The EPA received comments related to the use of THC monitoring as a means of controlling combustion related pollutants and, therefore, organic HAPs (see comment 6.4.1 in the Response to Comments Document).

Response: Stack THC emissions from kilns, in-line kiln raw mills, and raw material dryers result mainly from organic material within the feed and not from incomplete combustion. As a result, the suggested combustion monitoring alternatives are not relevant.

Performance Testing Frequency

Comment: The EPA received a comment requesting that performance tests be required more frequently than once every five years, citing other rules with more frequent testing requirements.

Response: The EPA selected the five year testing interval to synchronize the testing schedule with Title V permit renewals. The testing frequency for NHW cement kilns and other affected sources at portland cement manufacturing facilities has not been changed. The exception to this is the D/F performance tests. To maintain consistency with the requirements for HW kilns, the D/F performance testing frequency has been changed to every 2 and one half years.

Definitions

Comment: Commenters requested various changes to the definitions, including those of ''alkali bypass'' and ''feed'' to reflect cement industry practices.

Response: The final rule expands the definition of ''alkali bypass'', and defines ''kiln exhaust gas bypass'' as a synonym for alkali bypass. The final rule clarifies the definition of ''feed'' to include recycled cement kiln dust, consistent with past practice in enforcement of the NSPS.

Major Source Determination

Comment: Numerous comments were received regarding the use of emissions test data and emission factors (based on data provided in the proposal docket) in determining whether a source is major for hazardous air pollutants.

Response: The need for HAP-specific test methods and the validity of data obtained by various means to determine major source status are closely related. Hence this discussion covers both aspects under the overall title of major source determination.

Although emission standards are being promulgated for PM as a surrogate for semi-volatile and non-volatile HAP metals; THC as a surrogate for organic HAPs; and D/F, each facility owner/operator must make a major source determination that requires an estimate of the facility's potential to emit all HAPs from all emission sources. HCl and organic HAP emissions such as (but not limited to) benzene, toluene, hexane, formaldehyde, hexane, naphthalene, phenol, styrene, and xylenes are the main HAPs from the kiln that may cause facilities to be major sources, but HAPs emitted from all sources at the plant site should be accounted for in making a major source determination.

Comment: Some commenters questioned the need for accurate HCl measurements, since there is no HCl emission standard. Others stated that EPA should provide industry the choice of conducting testing for HCl with either Method 26, 321, or 322. They objected to the restriction that Method 26 could be used only if validated by Method 321 or 322. They also stated their belief that the Agency's decision regarding the negative bias of Method 26 was based on a limited set of test results and an insufficient investigation of the potential cause. Additional comments noted that Method 26 may actually give false positives due to inclusion of chloride salts in the calculation of measured results.

Response: As discussed above, HCl and organic HAPs emissions are the main HAPs from the kiln that will cause a source to be a major source, but HAPs emitted from all sources at the plant site, including metals emissions (discussed below) should be accounted for in making a major source determination. Accurate measurements of HCl in the kiln exhaust gases are necessary for major source determination. The EPA agrees with commenters that Method 26 may have positive biases attributable to chloride salts rather than to HCl; and negative biases due to condensation and/or removal of HCl on the filter and/or in the sampling probe. Therefore, the Agency has decided that Method 26 and 26A use without concurrent validation with M. 321 or M. 322 will only be acceptable for measuring HCl from NHW kilns to confirm that the portland cement plant is a major source. M. 26 or 26A may not be used to measure HCl in the determination that the source is an area source. Only the FTIR methods may be used in the measurement of HCl if the source claims it is not a major source.

Further, as a result of technical problems encountered by the Agency with the use of draft Method 322 (based on gas filter correlation/infrared technology) in the emission testing of lime kilns (which have a matrix similar to portland cement sources) [See Section IV.F. on Additional Test Methods for a description of the technical problems], and in response to concerns expressed by the commenters, the EPA is modifying its position regarding HCl measurements using this method in promulgating the final rule.

For the above reasons, the Agency has decided that only Methods 320 and 321 will be acceptable for measuring HCl from NHW kilns if the owner/operator wishes to claim its portland cement facility is not a major source. These methods are being promulgated as part of this rulemaking.

Comment: Commenters also requested that EPA allow cement manufacturers the option of using Method 25 (in addition to Method 18 or Method 320) for testing emissions of organic HAPs. The commenters suggest that the relatively inexpensive Method 25 could be used by cement plants that have low concentrations of organic matter in the raw material mix to verify that the plant's THC emissions are less than 10 tons/year.

Response: The focus of these commenters' point is alternatives to

measurement of organic HAPs in the process of making a major source determination. However, all HAPs (organic, HCl, metals, etc.) from all sources must be included in that determination, so it is necessary to obtain data that will allow summation of all HAP emissions to compare to the 10/25 ton per year thresholds specified in section 112 of the Clean Air Act. Depending on site-specific circumstances, EPA Method 25 may not provide sufficient information to make an accurate summation. For example, a source's determination that its THC emissions based on Method 25 or 25A are less than 10 tons per year does not necessarily signify that it is an area source; the source may be a major source based on the 25 ton per year criterion when all other HAP emissions are summed with the THC. If the source's THC emissions are over 10 tons per year, the source may choose to conduct emissions tests using EPA Method 320 to make a determination of actual organic HAP emissions. However, in lieu of conducting Method 320 emissions tests, the source could use Method 25A, but the source would have to assume that the mass emission rate (as propane) from all combustion sources combined at the site is attributed to one organic HAP. This amount would then have to be compared to the 10 ton per year threshold for one HAP. To summarize, in addition to accounting for organic HAPs (either through Method 320 testing or assuming all THC is one organic HAP), accurate measurements of HCl in the kiln exhaust gases would be necessary for major source determination, as well as measurements of HAP metals (see below), to obtain data that will allow summation of all HAP emissions to compare to the 10/25 ton per year thresholds.

Comment: Another commenter requested that EPA allow the use of an alternative to what they perceived as an EPA-suggested emission factor for metal emissions, of one percent of PM emissions, to determine major source status.

Response: If after the source determines that it is not major because it does not meet either the 10/25 ton per year thresholds based on the summation of HCl and organic HAP emissions from all sources at the plant, the source would need to determine its HAP metals emissions from all sources at the facility as well, to make a determination that it is not a major source. The use of a ''one percent HAP metals in PM'' emission factor assumption will not provide definitive evidence that the source is an area source. However, the Agency would allow sources to forego the speciated HAP metals emission tests (through the use of Method 29) if it is assumed that 1 percent of the total PM emissions from all sources at the site are metal HAPs. This assumed amount of metal HAPs emissions would be added to the amount of HCl and organic HAPs emitted (determined as described above), and this total amount would then be compared to the 25 ton per year threshold for all HAPs combined. To reiterate, each facility owner/operator must make a major source determination that requires an estimate of the facility's potential to emit all HAPs from all emission sources, accounting for HCl, organic HAPs (either through speciation of organic HAPs or assuming all THC is one organic HAP), and metals (either through speciation of metal HAPs or assuming 1 percent of PM is metal HAP), to allow summation of all HAP emissions to compare to the 10/25 ton per year thresholds.

Voluntary Consensus Standards

Comment: One commenter (IV–D–17) stated that EPA's actions (in developing and proposing the precursor to EPA Fourier Transform Infrared Spectroscopy [FTIR] test method 320) directly conflict with the guidance of and directives of the 1995 National Technology Transfer and Advancement Act and the Office of Management and Budget (OMB) Circular A–119 because: (1) the American Society of Testing and Materials (ASTM) FTIR consensus based test method is available, and (2) the EPA Emission Measurement Center (EMC) representatives were made aware of the development of the ASTM method and chose duplicative measures in developing and proposing the precursor to EPA FTIR test method 320. (The OMB Circular states specifically that ''If a voluntary consensus standards body is in the process of developing or adopting a voluntary consensus standard that would likely be lawful and practical for an agency to use, and would be developed on a timely basis, an agency should not be developing its own government unique standard and instead should be participating in the activities of the voluntary consensus standards body.'')

Response: The Agency has been actively developing extractive FTIR-based methods for HAPs since 1992. Methods 320 and 321 are direct products of this long-term effort to apply an innovative approach to emissions measurement in the form of extractive FTIR. The Agency has tested these methods in the laboratory and in the field extensively (conducting testing at two portland cement facilities), and has conducted multiple validation tests of these methods. The Portland Cement Association (PCA), in representing various members of the regulated industry, has conducted its own series of validation tests of these methods. Actually, Method 321 was developed and validated by PCA, and has been adopted by the Agency as Method 321. Agency personnel informed ASTM in 1996 that the Agency methods were in active development, and an ASTM standard seemed redundant. Additionally, the ASTM standard has not undergone field validation, which is essential in establishing the precision and accuracy of any test method.

The Agency has conducted a review of the ASTM method. While the ASTM method is in some ways similar to Method 320, the ASTM method is not sufficiently detailed to document proper application, and does not contain the quality assurance procedures the Agency requires in compliance methods. Specifically, the ASTM method does not address specific calibration transfer standards, nor does it address the preparation of reference spectra. Therefore, EPA has determined that it is impractical to adopt the ASTM method at this time and is promulgating Method 320.

Pollution Prevention

Comment: Comments were received stating that the proposed rule did not contain measures that prevent pollution or reduce energy requirements, and suggested specific pollution prevention measures, including process modifications, taken by specific facilities.

Response: The NESHAP is written in terms of emissions standards based on MACT floor technologies and allows pollution prevention techniques to achieve compliance. The EPA considered pollution prevention options available and the basis for the standard for THC for new greenfield sites, feed material selection, is a pollution prevention measure. In addition, the final standard includes a monitoring requirement for inspection of the combustion system components of kilns and in-line kiln raw mills (an energy efficiency and pollution prevention measure) and standards for PM from product handling affected sources (which leads to improved recovery of salable product and pollution prevention). Furthermore, the final standard clarifies that recovered cement kiln dust can be included in the calculation of kiln feed (encouraging recycling, improved PM control and pollution prevention).

Control Cost Impacts and Data Evaluation

Comment: Comments were received concerning the EPA's control cost estimates, including the assumptions regarding the number of sources requiring upgrades to meet the standards for PM and D/F, and the capital expenditures necessary to meet the standard. In particular one commenter projected that capital costs would exceed the threshold which triggers Executive Order 12866. Another commenter questioned the lack of cost data on upgrades to PMCDs for material handling affected sources.

Response: The costs to achieve compliance are expected to be highly site-specific and vary significantly. The commenters did not provide any details regarding their estimates of the cost to comply, so the EPA is unable to determine whether the commenters' cost estimates were limited to those costs necessary to comply with the provisions of the NESHAP.

The EPA has reviewed cost data provided by the Portland Cement Association prior to proposal. The foundation for the cost estimates, and initial point of criticism of EPA's cost estimates, is the model plant characteristics. For example, the APCA report provided a review of the model plant characteristics and suggested that the design characteristics for each model be 20 to 25 percent higher than the annual average production rate basis for the model. In particular, the APCA report stated that the EPA model plant gas flows for wet process and long dry kilns were 25 to 30 percent too low, based on their consultant's design practice.

The EPA developed design characteristics for the model plants based on data provided to the Agency in ICRs and test reports (docket items II–B–24 and II–B–37). For a kiln with a given nominal production rate that might be found in several different plants, variations in gas flow rates would be expected. The EPA used the flow rate and production data from actual installations to develop production rate versus gas flow graphs to establish the model plant characteristics. Owners may elect to design their upgrades or new equipment to accommodate higher production rates, but those costs and other impacts are not attributable to compliance with the MACT standards. EPA did not include costs associated with upgrading equipment used to control emissions from materials handling affected sources, as these affected sources have been subject to the NSPS for many years (a longer period than the expected life of these affected sources), and compliance with the NESHAP, which is equivalent to the NSPS for these affected sources would not impose additional costs.

The basis of the control costs for model plants estimated in the docket memoranda and proposal preamble is the Office of Air Quality Planning and Standards Cost Manual. The cost algorithms in the manual were derived from control equipment vendor quotes, standard cost estimating factors, and contractor experience. Installation costs, utilities, maintenance, and other operating costs were estimated and included for impact estimation. The EPA maintains that the costs provided in the proposal preamble are a reasonable basis for projecting the national impacts of the these rules.

VII. Administrative Requirements

A. Docket

A record has been established for this rulemaking under docket number A–92–53. This record includes information considered by the EPA in the development of the promulgated standards. A public version of this record, which does not include any information included as confidential business information, is available for inspection from 8:00 a.m. to 5:30 p.m. Monday-Friday, excluding legal holidays. The public record is located in the Air & Radiation Docket & Information Center, Room M1500, 401 M Street S.W., Washington, D.C. 20460.

Response-to-Comment Document

The response-to-comment document for the promulgated standards contains a summary of all public comments received following proposal of the rule and the EPA's response to these comments. This document is located in the docket (Docket Item No. V–C–1) and is available for downloading from the Technology Transfer Network (TTN). The TTN is one of the EPA's electronic bulletin boards. The TTN provides information from EPA in various areas of air pollution technology or policy. The service is free except for the cost of a phone call. Dial (919) 541–5742 for up to a 14,400 bps modem, or connect through the internet to the following address: ''www.epa.gov/ttn/oarpg''. If more information on the Technology Transfer Network is needed, call the HELP line at (919) 541–5384.

B. Executive Order 12866

Under Executive Order 12866 (58 FR 5173, October 4, 1993), the EPA must determine whether the regulatory action is ''significant'' and therefore subject to Office of Management and Budget (OMB) review and the requirements of the Executive Order. The Executive Order defines ''significant regulatory action'' as one that is likely to result in standards that may:

(1) Have an annual effect on the economy of $100 million or more or adversely affect, in a material way, the economy, a sector of the economy, productivity, competition, jobs, the environment, public health or safety, or State, local, or tribal governments or communities;

(2) Create a serious inconsistency or otherwise interfere with an action taken or planned by another agency;

(3) Materially alter the budgetary impact of entitlement, grants, user fees, or loan programs or the rights and obligations of recipients thereof; or

(4) Raise novel legal or policy issues arising out of legal mandates, the President's priorities, or the principles set forth in the Executive Order.

Because the projected annual costs (including monitoring) for this NESHAP are $37 million, a regulatory impact analysis has not been prepared. However this action is considered a ''significant regulatory action'' within the meaning of Executive Order 12866 (primarily due to this action's overlap with the Hazardous Waste Combustor MACT standard), and the promulgated regulation presented in this notice was submitted to the OMB for review. Any written comments are included in the docket listed at the beginning of today's notice under **ADDRESSESS.** The docket is available for public inspection at the EPA's Air Docket Section, which is listed in the **ADDRESSES** section of this preamble.

C. Executive Order 12875: Enhancing Intergovernmental Partnerships

Under Executive Order 12875, the EPA may not issue a regulation that is not required by statute and that creates a mandate upon a State, local or tribal government, unless the Federal government provides the funds necessary to pay the direct compliance costs incurred by those governments, or EPA consults with those governments. If EPA complies by consulting, Executive Order 12875 requires EPA to provide to the Office of Management and Budget a description of the extent of EPA's prior consultation with representatives of affected State, local and tribal governments, the nature of their concerns, copies of any written communications from the governments, and a statement supporting the need to issue the regulation. In addition, Executive Order 12875 requires EPA to

develop an effective process permitting elected officials and other representatives of State, local and tribal governments ''to provide meaningful and timely input in the development of regulatory proposals containing significant unfunded mandates.''

Today's rule does not create a mandate on State, local or tribal governments. The rule does not impose any enforceable duties on these entities. Accordingly, the requirements of section 1(a) of Executive Order 12875 do not apply to this rule.

D. Unfunded Mandates Reform Act

Title II of the Unfunded Mandates Reform Act of 1995 (UMRA), Public Law 104–4, establishes requirements for Federal agencies to assess the effects of their regulatory actions on State, local, and tribal governments and the private sector. Under section 202 of the UMRA, the EPA generally must prepare a written statement, including a cost-benefit analysis, for proposed and final rules with ''Federal mandates'' that may result in expenditures to State, local, and tribal governments, in the aggregate, or to the private sector, of $100 million or more in any one year. Before promulgating an EPA rule for which a written statement is needed, section 205 of the UMRA generally requires the EPA to identify and consider a reasonable number of regulatory alternatives and adopt the least costly, most cost-effective or least burdensome alternative that achieves the objectives of the rule. The provisions of section 205 do not apply when they are inconsistent with applicable law. Moreover, section 205 allows the EPA to adopt an alternative other than the least costly, most cost-effective, or least burdensome alternative if the Administrator publishes with the final rule an explanation why that alternative was not adopted. Before the EPA establishes any regulatory requirements that may significantly or uniquely affect small governments, including tribal governments, it must have developed under section 203 of the UMRA a small government agency plan. The plan must provide for notifying potentially affected small governments, enabling officials of affected small governments to have meaningful and timely input in the development of EPA regulatory proposals with significant Federal intergovernmental mandates, and informing, educating, and advising small governments on compliance with the regulatory requirements.

The EPA has determined that this rule does not contain a Federal mandate that may result in expenditures of $100 million or more for State, local, and tribal governments, in aggregate, or the private sector in any one year, nor does the rule significantly or uniquely impact small governments, because it contains no requirements that apply to such governments or impose obligations upon them. Thus, the requirements of the UMRA do not apply to this rule.

E. Regulatory Flexibility Act

The EPA has determined that it is not necessary to prepare a regulatory flexibility analysis in connection with this final rule. As discussed earlier in the response to comments section of the preamble, the EPA has determined that this rule will not have a significant economic impact on a substantial number of small entities.

Although the rule will not have a significant impact on a substantial number of small entities, the EPA worked with portland cement small entities throughout the rulemaking process. Meetings were held on a regular basis with the Portland Cement Association (PCA) and industry representatives, including both small and large firms, to discuss the development of the rule, exchange information and data, solicit comments on draft rule requirements, and provide a list of the small firms. In addition, some cement industry representatives formed a group called the ''Small Cement Company MACT Coalition'', which designated the PCA as its representative in meetings with the EPA concerning the rulemaking for the portland cement industry.

The promulgated emission standards are representative of the floor level of emision control, which is the minimum level of control allowed under the Act. Further, the costs of required performance testing and monitoring have been minimized by specifying emission limits and monitoring parameters in terms of surrogates for HAP emissions, which are less costly to measure. The Agency has also tried to make the rule ''user friendly,'' with language that is easy to understand by all of the regulated community. EPA is also allowing affected firms up to 3 years from the effective date of the final rule to comply, which could lessen capital availability concerns. An extra year may be granted by the Administrator or delegated regulatory authority if necessary to install controls. Further, EPA has deferred the compliance date for installing PM CEMs pending a future proposed rulemaking.

F. Submission to Congress and the General Accounting Office

The Congressional Review Act, 5 U.S.C. 801 *et seq.*, as added by the Small Business Regulatory Enforcement Fairness Act of 1996, generally provides that before a rule may take effect, the agency promulgating the rule must submit a rule report, which includes a copy of the rule, to each House of the Congress and to the Comptroller General of the United States. The EPA will submit a report containing this rule and other required information to the U.S. Senate, the U.S. House of Representatives, and the Comptroller General of the United States prior to publication of the rule in the **Federal Register**. This rule is not a ''major rule'' as defined by 5 U.S.C. § 804(2).

G. Paperwork Reduction Act

The information collection requirements in this rule are being submitted for approval to the Office of Management and Budget (OMB) under the *Paperwork Reduction Act,* 44 U.S.C. 3501 *et seq.* An Information Collection Request (ICR) document has been prepared by EPA (ICR No. 1801.02) and a copy may be obtained from Sandy Farmer by mail at OP Regulatory Information Division; U.S. Environmental Protection Agency (2137); 401 M St., S.W.; Washington, DC 20460, by email at farmer.sandy@epamail.epa.gov, or by calling (202) 260–2740. A copy may also be downloaded off the internet at http://www.epa.gov/icr. The information requirements are not effective until OMB approves them.

The EPA is required under section 112 (d) of the Clean Air Act to regulate emissions of HAPs listed in section 112 (b). The requested information is needed as part of the overall compliance and enforcement program. The ICR requires that portland cement manufacturing plants retain records of parameter and emissions monitoring data at facilities for a period of 5 years, which is consistent with the General Provisions to 40 CFR part 63 and the permit requirements under 40 CFR part 70. All sources subject to this rule will be required to obtain operating permits either through the State-approved permitting program or, if one does not exist, in accordance with the provisions of 40 CFR part 71, when promulgated.

The public reporting burden for this collection of information is estimated to average 2148 hours per respondent per year for an estimated 36 respondents. This estimate includes performance tests and reports (with repeat tests where needed); one-time preparation of an operation and maintenance plan with semiannual reports of any event where the procedures in the plan were not followed; semiannual excess emissions reports; notifications; and

recordkeeping. The total annualized capital costs associated with monitoring requirements over the three-year period of the ICR is estimated at $750,000. This estimate includes the capital and startup costs associated with installation of required continuous monitoring equipment for those affected sources subject to the standard. The total operation and maintenance cost is estimated at $682,000 per year. Burden means the total time, effort, or financial resources expended by persons to generate, maintain, retain, or disclose or provide information to or for a Federal agency. This includes the time needed to review instructions; develop, acquire, install, and utilize technology and systems for the purposes of collecting, validating, and verifying information, processing and maintaining information, and disclosing and providing information; adjust the existing ways to comply with any previously applicable instructions and requirements; train personnel to be able to respond to a collection of information; search data sources; complete and review the collection of information; and transmit or otherwise disclose the information.

An Agency may not conduct or sponsor, and a person is not required to respond to a collection of information unless it displays a currently valid OMB control number. The OMB control numbers for EPA's regulations are listed in 40 CFR Part 9 and 48 CFR Chapter 15.

H. Pollution Prevention Act

During the development of this rule, the EPA explored opportunities to eliminate or reduce emissions through the application of new processes or work practices. This NESHAP includes a monitoring requirement for an inspection of the components of the combustion system of each kiln and in-line kiln raw mill to be conducted at least once per year. Such an inspection will promote fuel efficiency and decrease the formation of combustion related pollutants.

I. National Technology Transfer and Advancement Act

Section 12(d) of the National Technology Transfer and Advancement Act (NTTAA) directs all Federal agencies to use voluntary consensus standards in regulatory and procurement activities unless to do so would be inconsistent with applicable law or otherwise impracticable. Voluntary consensus standards are technical standards (e.g., materials specifications, test methods, sampling procedures, and business practices) developed or adopted by one or more voluntary consensus bodies. The NTTAA requires Federal agencies to provide Congress, through annual reports to OMB, with explanations when an agency does not use available and applicable voluntary consensus standards.

Consistent with the NTTAA, the EPA conducted a search to identify voluntary consensus standards. The search identified 21 voluntary consensus standards that appeared to have possible use in lieu of EPA standard reference methods. However, after reviewing available standards, EPA determined that 14 of the candidate consensus standards identified for measuring emissions of the HAPs or surrogates subject to emission standards in the rule would not be practical due to lack of equivalency, documentation, validation data and other important technical and policy considerations. Six of the remaining candidate consensus standards are new standards under development that EPA plans to follow, review and consider adopting at a later date.

One consensus standard, ASTM D6216–98, appears to be practical for EPA use in lieu of EPA Performance Specification 1 (See 40 CFR Part 60, Appendix B). On September 23, 1998, EPA proposed incorporating by reference ASTM D6216–98 under a separate rulemaking (63 FR 50824) that would allow broader use and application of this consensus standard. EPA plans to complete this action in the near future. For these reasons, EPA defers taking action in this rulemaking that would adopt D6216–98 in lieu of PS–1 requirements as it would be impractical for EPA to act independently from other rulemaking activity already undergoing notice and comment.

Additionally, EPA received comments that ASTM FTIR Standard D6348 should be used in lieu of EPA's proposed Fourier transform infrared spectroscopy (FTIR) emission test methods. EPA has determined for a number of reasons that the ASTM Standard D6348 is one of the 14 standards determined to be impractical to adopt for the purposes of this rulemaking. EPA review comments on ASTM Standard D6348 are included in the docket for this rulemaking and summarized in the response to comments section of this preamble. ASTM has also been advised of the reasons for impracticality and ASTM Subcommittee D22–03 is now undertaking a revision of the ASTM standard. Upon demonstration of technical equivalency with the EPA FTIR methods, the revised ASTM standard could be incorporated by reference for EPA regulatory applicability at a later date.

This rule requires standard EPA methods known to the industry and States. Approved alternative methods also may be used with prior EPA approval.

J. Executive Order 13045

Executive Order 13045 applies to any rule that EPA determines (1) is ''economically significant'' as defined under Executive Order 12866, and (2) the environmental health or safety risk addressed by the rule has a disproportionate effect on children. If the regulatory action meets both criteria, the Agency must evaluate the environmental health or safety effects of the planned rule on children and explain why the planned regulation is preferable to other potentially effective and reasonably feasible alternatives considered by the Agency.

This final rule is not subject to E.O. 13045, entitled ''Protection of Children from Environmental Health Risks and Safety Risks'' (62 FR 19885, April 23, 1997), because it is not an economically significant regulatory action as defined by Executive Order 12866, and it does not address an environmental health or safety risk that would have a disproportionate effect on children.

K. Executive Order 13084: Consultation and Coordination With Indian Tribal Governments

Under Executive Order 13084, EPA may not issue a regulation that is not required by statute, that significantly or uniquely affects the communities of Indian tribal governments, and that imposes substantial direct compliance costs on those communities, unless the Federal government provides the funds necessary to pay the direct compliance costs incurred by the tribal governments, or EPA consults with those governments. If EPA complies by consulting, Executive Order 13084 requires EPA to provide to the Office of Management and Budget, in a separately identified section of the preamble to the rule, a description of the extent of EPA's prior consultation with representatives of affected tribal governments, a summary of the nature of their concerns, and a statement supporting the need to issue the regulation. In addition, Executive Order 13084 requires EPA to develop an effective process permitting elected officials and other representatives of Indian tribal governments ''to provide meaningful and timely input in the development of regulatory policies on matters that

significantly or uniquely affect their communities.''

Today's rule does not significantly or uniquely affect the communities of Indian tribal governments. Accordingly, the requirements of section 3(b) of Executive Order 13084 do not apply to this rule.

List of Subjects in 40 CFR Part 63

Environmental protection, Air pollution control, Hazardous substances, Portland cement manufacturing, Reporting and recordkeeping requirements.

Dated: May 14, 1999.

Carol M. Browner,

Administrator.

For the reasons set out in the preamble, part 63 of title 40, chapter 1 of the Code of Federal Regulations is amended as follows:

PART 63—NATIONAL EMISSION STANDARDS FOR HAZARDOUS AIR POLLUTANTS FOR SOURCE CATEGORIES

1. The authority citation for part 63 continues to read as follows:

Authority: 42 U.S.C. 7401, *et seq.*

2. Part 63 is amended by adding a new subpart LLL, consisting of §§ 63.1340 through 63.1359 to read as follows:

Subpart LLL—National Emission Standards for Hazardous Air Pollutants From the Portland Cement Manufacturing Industry

General

Sec.
63.1340 Applicability and designation of affected sources.
63.1341 Definitions.

Emission Standards and Operating Limits

63.1342 Standards: General.
63.1343 Standards for kilns and in-line kiln/raw mills.
63.1344 Operating limits for kilns and in-line kiln/raw mills.
63.1345 Standards for clinker coolers.
63.1346 Standards for new and reconstructed raw material dryers.
63.1347 Standards for raw and finish mills.
63.1348 Standards for affected sources other than kilns; in-line kiln raw mills; clinker coolers; new and reconstructed raw material dryers; and raw and finish mills.

Monitoring and Compliance Provisions

63.1349 Performance testing requirements.
63.1350 Monitoring requirements.
63.1351 Compliance dates.
63.1352 Additional test methods.

Notification, Reporting and Recordkeeping

63.1353 Notification requirements.
63.1354 Reporting requirements.
63.1355 Recordkeeping requirements.

Other

63.1356 Exemption from new source performance standards.
63.1357 Temporary, conditioned exemption from particulate and opacity standards.
63.1358 Delegation of authority.
63.1359 [Reserved]

Table 1 to Subpart LLL of Part 63—Applicability of General Provisions

Subpart LLL—National Emission Standards for Hazardous Air Pollutants From the Portland Cement Manufacturing Industry

General

§ 63.1340 Applicability and designation of affected sources.

(a) Except as specified in paragraphs (b) and (c) of this section, the provisions of this subpart apply to each new and existing portland cement plant which is a major source or an area source as defined in § 63.2.

(b) The affected sources subject to this subpart are:

(1) Each kiln and each in-line kiln/raw mill at any major or area source, including alkali bypasses, except for kilns and in-line kiln/raw mills that burn hazardous waste and are subject to and regulated under subpart EEE of this part;

(2) Each clinker cooler at any portland cement plant which is a major source;

(3) Each raw mill at any portland cement plant which is a major source;

(4) Each finish mill at any portland cement plant which is a major source;

(5) Each raw material dryer at any portland cement plant which is a major source and each greenfield raw material dryer at any portland cement plant which is a major or area source;

(6) Each raw material, clinker, or finished product storage bin at any portland cement plant which is a major source;

(7) Each conveying system transfer point at any portland cement plant which is a major source;

(8) Each bagging system at any portland cement plant which is a major source; and

(9) Each bulk loading or unloading system at any portland cement plant which is a major source.

(c) For portland cement plants with on-site nonmetallic mineral processing facilities, the first affected source in the sequence of materials handling operations subject to this subpart is the raw material storage, which is just prior to the raw mill. The primary and secondary crushers and any other equipment of the on-site nonmetallic mineral processing plant which precedes the raw material storage are not subject to this subpart. Furthermore, the first conveyor transfer point subject to this subpart is the transfer point associated with the conveyor transferring material from the raw material storage to the raw mill.

(d) The owner or operator of any affected source subject to the provisions of this subpart is subject to title V permitting requirements.

§ 63.1341 Definitions.

All terms used in this subpart that are not defined in this section have the meaning given to them in the CAA and in subpart A of this part.

Alkali bypass means a duct between the feed end of the kiln and the preheater tower through which a portion of the kiln exit gas stream is withdrawn and quickly cooled by air or water to avoid excessive buildup of alkali, chloride and/or sulfur on the raw feed. This may also be referred to as the ''kiln exhaust gas bypass''.

Bagging system means the equipment which fills bags with portland cement.

Clinker cooler means equipment into which clinker product leaving the kiln is placed to be cooled by air supplied by a forced draft or natural draft supply system.

Continuous monitor means a device which continuously samples the regulated parameter specified in § 63.1350 of this subpart without interruption, evaluates the detector response at least once every 15 seconds, and computes and records the average value at least every 60 seconds, except during allowable periods of calibration and except as defined otherwise by the continuous emission monitoring system performance specifications in appendix B to part 60 of this chapter.

Conveying system means a device for transporting materials from one piece of equipment or location to another location within a facility. Conveying systems include but are not limited to the following: feeders, belt conveyors, bucket elevators and pneumatic systems.

Conveying system transfer point means a point where any material including but not limited to feed material, fuel, clinker or product, is transferred to or from a conveying system, or between separate parts of a conveying system.

Dioxins and furans (D/F) means tetra-, penta-, hexa-, hepta-, and octa-chlorinated dibenzo dioxins and furans.

Facility means all contiguous or adjoining property that is under common ownership or control, including properties that are separated only by a road or other public right-of-way.

Feed means the prepared and mixed materials, which include but are not limited to materials such as limestone, clay, shale, sand, iron ore, mill scale, cement kiln dust and flyash, that are fed to the kiln. Feed does not include the fuels used in the kiln to produce heat to form the clinker product.

Finish mill means a roll crusher, ball and tube mill or other size reduction equipment used to grind clinker to a fine powder. Gypsum and other materials may be added to and blended with clinker in a finish mill. The finish mill also includes the air separator associated with the finish mill.

Greenfield kiln, in-line kiln/raw mill, or raw material dryer means a kiln, in-line kiln/raw mill, or raw material dryer for which construction is commenced at a plant site (where no kilns and no in-line kiln/raw mills were in operation at any time prior to March 24, 1998) after March 24, 1998.

Hazardous waste is defined in § 261.3 of this chapter.

In-line kiln/raw mill means a system in a portland cement production process where a dry kiln system is integrated with the raw mill so that all or a portion of the kiln exhaust gases are used to perform the drying operation of the raw mill, with no auxiliary heat source used. In this system the kiln is capable of operating without the raw mill operating, but the raw mill cannot operate without the kiln gases, and consequently, the raw mill does not generate a separate exhaust gas stream.

Kiln means a device, including any associated preheater or precalciner devices, that produces clinker by heating limestone and other materials for subsequent production of portland cement.

Kiln exhaust gas bypass means alkali bypass.

Monovent means an exhaust configuration of a building or emission control device (e. g. positive pressure fabric filter) that extends the length of the structure and has a width very small in relation to its length (i. e., length to width ratio is typically greater than 5:1). The exhaust may be an open vent with or without a roof, louvered vents, or a combination of such features.

New brownfield kiln, in-line kiln raw mill, or raw material dryer means a kiln, in-line kiln/raw mill or raw material dryer for which construction is commenced at a plant site (where kilns and/or in-line kiln/raw mills were in operation prior to March 24, 1998) after March 24, 1998.

One-minute average means the average of thermocouple or other sensor responses calculated at least every 60 seconds from responses obtained at least once during each consecutive 15 second period.

Portland cement plant means any facility manufacturing portland cement.

Raw material dryer means an impact dryer, drum dryer, paddle-equipped rapid dryer, air separator, or other equipment used to reduce the moisture content of feed materials.

Raw mill means a ball and tube mill, vertical roller mill or other size reduction equipment, that is not part of an in-line kiln/raw mill, used to grind feed to the appropriate size. Moisture may be added or removed from the feed during the grinding operation. If the raw mill is used to remove moisture from feed materials, it is also, by definition, a raw material dryer. The raw mill also includes the air separator associated with the raw mill.

Rolling average means the average of all one-minute averages over the averaging period.

Run average means the average of the one-minute parameter values for a run.

TEQ means the international method of expressing toxicity equivalents for dioxins and furans as defined in U.S. EPA, Interim Procedures for Estimating Risks Associated with Exposures to Mixtures of Chlorinated Dibenzo-p-dioxins and -dibenzofurans (CDDs and CDFs) and 1989 Update, March 1989.

Emission Standards and Operating Limits

§ 63.1342 Standards: General.

(a) Table 1 to this subpart provides cross references to the 40 CFR part 63, subpart A, general provisions, indicating the applicability of the general provisions requirements to subpart LLL.

(b) Table 1 of this section provides a summary of emission limits and operating limits of this subpart.

TABLE 1 TO § 63.1342.—EMISSION LIMITS AND OPERATING LIMITS

Affected source	Pollutant or opacity	Emission and operating limit
All kilns and in-line kiln/raw mills at major sources (including alkali bypass).	PM	0.15 kg/Mg of feed (dry basis).
	Opacity	20 percent.
All kilns and in-line kiln/raw mills at major and area sources (including alkali bypass).	D/F	0.20 ng TEQ/dscm or 0.40 ng TEQ/dscm when the average of the performance test run average particulate matter control device (PMCD) inlet temperatures is 204° C or less. [Corrected to 7 percent oxygen] Operate such that the three-hour rolling average PMCD inlet temperature is no greater than the temperature established at performance test. If activated carbon injection is used: Operate such that the three-hour rolling average activated carbon injection rate is no less than rate established at performance test. Operate such that either the carrier gas flow rate or carrier gas pressure drop exceeds the value established at performance test. Inject carbon of equivalent specifications to that used at performance test.
New greenfield kilns and in-line kiln/raw mills at major and area sources.	THC	50 ppmvd, as propane, corrected to 7 percent oxygen.
All clinker coolers at major sources	PM	0.050 kg/Mg of feed (dry basis)
	Opacity	10 percent.
All raw mills and finish mills at major sources	Opacity	10 percent.
New greenfield raw material dryers at major and area sources.	THC	50 ppmvd, as propane, corrected to 7 percent oxygen.
All raw material dryers and material handling points at major sources.	Opacity	10 percent.

§ 63.1343 Standards for kilns and in-line kiln/raw mills.

(a) *General.* The provisions in this section apply to each kiln, each in-line kiln/raw mill, and any alkali bypass associated with that kiln or in-line kiln/raw mill.

(b) *Existing, reconstructed, or new brownfield/major sources.* No owner or operator of an existing, reconstructed or new brownfield kiln or an existing, reconstructed or new brownfield in-line kiln/raw mill at a facility that is a major source subject to the provisions of this subpart shall cause to be discharged into the atmosphere from these affected sources, any gases which:

(1) Contain particulate matter (PM) in excess of 0.15 kg per Mg (0.30 lb per ton) of feed (dry basis) to the kiln. When there is an alkali bypass associated with a kiln or in-line kiln/raw mill, the combined particulate matter emissions from the kiln or in-line kiln/raw mill and the alkali bypass are subject to this emission limit.

(2) Exhibit opacity greater than 20 percent.

(3) Contain D/F in excess of:

(i) 0.20 ng per dscm (8.7×10^{-11} gr per dscf) (TEQ) corrected to seven percent oxygen; or

(ii) 0.40 ng per dscm (1.7×10^{-10} gr per dscf) (TEQ) corrected to seven percent oxygen, when the average of the performance test run average temperatures at the inlet to the particulate matter control device is 204 °C (400 °F) or less.

(c) *Greenfield/major sources.* No owner or operator that commences construction of a greenfield kiln or greenfield inline kiln/raw mill at a facility which is a major source subject to the provisions of this subpart shall cause to be discharged into the atmosphere from these affected sources any gases which:

(1) Contain particulate matter in excess of 0.15 kg per Mg (0.30 lb per ton) of feed (dry basis) to the kiln. When there is an alkali bypass associated with a kiln or in-line kiln/raw mill, the combined particulate matter emissions from the kiln or in-line kiln/raw mill and the bypass stack are subject to this emission limit.

(2) Exhibit opacity greater than 20 percent.

(3) Contain D/F in excess of:

(i) 0.20 ng per dscm (8.7×10^{-11} gr per dscf) (TEQ) corrected to seven percent oxygen; or

(ii) 0.40 ng per dscm (1.7×10^{-10} gr per dscf) (TEQ) corrected to seven percent oxygen, when the average of the performance test run average temperatures at the inlet to the particulate matter control device is 204 °C (400 °F) or less.

(4) Contain total hydrocarbon (THC), from the main exhaust of the kiln or in-line kiln/raw mill, in excess of 50 ppmvd as propane, corrected to seven percent oxygen.

(d) *Existing, reconstructed, or new brownfield/area sources.* No owner or operator of an existing, reconstructed, or new brownfield kiln or an existing, reconstructed or new brownfield in-line kiln/raw mill at a facility that is an area source subject to the provisions of this subpart shall cause to be discharged into the atmosphere from these affected sources any gases which contain D/F in excess of:

(1) 0.20 ng per dscm (8.7×10^{-11} gr per dscf) (TEQ) corrected to seven percent oxygen; or

(2) 0.40 ng per dscm (1.7×10^{-10} gr per dscf) (TEQ) corrected to seven percent oxygen, when the average of the performance test run average temperatures at the inlet to the particulate matter control device is 204 °C (400 °F) or less.

(e) *Greenfield/area sources.* No owner or operator of a greenfield kiln or a greenfield in-line kiln/raw mill at a facility that is an area source subject to the provisions of this subpart shall cause to be discharged into the atmosphere from these affected sources any gases which:

(1) Contain D/F in excess of:

(i) 0.20 ng per dscm (8.7×10^{-11} gr per dscf) (TEQ) corrected to seven percent oxygen; or

(ii) 0.40 ng per dscm (1.7×10^{-11} gr per dscf) (TEQ) corrected to seven percent oxygen, when the average of the performance test run average temperatures at the inlet to the particulate matter control device is 204 °C (400 °F) or less.

(2) Contain THC, from the main exhaust of the kiln or in-line kiln/raw mill, in excess of 50 ppmvd as propane, corrected to seven percent oxygen.

§ 63.1344 Operating limits for kilns and in-line kiln/raw mills.

(a) The owner or operator of a kiln subject to a D/F emission limitation under § 63.1343 must operate the kiln such that the temperature of the gas at the inlet to the kiln particulate matter control device (PMCD) and alkali bypass PMCD, if applicable, does not exceed the applicable temperature limit specified in paragraph (b) of this section. The owner or operator of an in-line kiln/raw mill subject to a D/F emission limitation under § 63.1343 must operate the in-line kiln/raw mill, such that:

(1) When the raw mill of the in-line kiln/raw mill is operating, the applicable temperature limit for the main in-line kiln/raw mill exhaust, specified in paragraph (b) of this section and established during the performance test when the raw mill was operating is not exceeded.

(2) When the raw mill of the in-line kiln/raw mill is not operating, the applicable temperature limit for the main in-line kiln/raw mill exhaust, specified in paragraph (b) of this section and established during the performance test when the raw mill was not operating, is not exceeded.

(3) If the in-line kiln/raw mill is equipped with an alkali bypass, the applicable temperature limit for the alkali bypass, specified in paragraph (b) of this section and established during the performance test when the raw mill was operating, is not exceeded.

(b) The temperature limit for affected sources meeting the limits of paragraph (a) of this section or paragraphs (a)(1) through (a)(3) of this section is determined in accordance with § 63.1349(b)(3)(iv).

(c) The owner or operator of an affected source subject to a D/F emission limitation under § 63.1343 that employs carbon injection as an emission control technique must operate the carbon injection system in accordance with paragraphs (c)(1) and (c)(2) of this section.

(1) The three-hour rolling average activated carbon injection rate shall be equal to or greater than the activated carbon injection rate determined in accordance with § 63.1349(b)(3)(vi).

(2) The owner or operator shall either:

(i) Maintain the minimum activated carbon injection carrier gas flow rate, as a three-hour rolling average, based on the manufacturer's specifications. These specifications must be documented in the test plan developed in accordance with § 63.7(c), or

(ii) Maintain the minimum activated carbon injection carrier gas pressure drop, as a three-hour rolling average, based on the manufacturer's specifications. These specifications must be documented in the test plan developed in accordance with § 63.7(c).

(d) Except as provided in paragraph (e) of this section, the owner or operator of an affected source subject to a D/F emission limitation under § 63.1343 that employs carbon injection as an emission control technique must specify and use the brand and type of activated carbon used during the performance test until a subsequent performance test is conducted, unless the site-specific performance test plan contains documentation of key parameters that

affect adsorption and the owner or operator establishes limits based on those parameters, and the limits on these parameters are maintained.

(e) The owner or operator of an affected source subject to a D/F emission limitation under § 63.1343 that employs carbon injection as an emission control technique may substitute, at any time, a different brand or type of activated carbon provided that the replacement has equivalent or improved properties compared to the activated carbon specified in the site-specific performance test plan and used in the performance test. The owner or operator must maintain documentation that the substitute activated carbon will provide the same or better level of control as the original activated carbon.

§ 63.1345 Standards for clinker coolers.

(a) No owner or operator of a new or existing clinker cooler at a facility which is a major source subject to the provisions of this subpart shall cause to be discharged into the atmosphere from the clinker cooler any gases which:

(1) Contain particulate matter in excess of 0.050 kg per Mg (0.10 lb per ton) of feed (dry basis) to the kiln.

(2) Exhibit opacity greater than ten percent.

(b) [Reserved].

§ 63.1346 Standards for new and reconstructed raw material dryers.

(a) *Brownfield/major sources.* No owner or operator of a new or reconstructed brownfield raw material dryer at a facility which is a major source subject to this subpart shall cause to be discharged into the atmosphere from the new or reconstructed raw material dryer any gases which exhibit opacity greater than ten percent.

(b) *Greenfield/area sources.* No owner or operator of a greenfield raw material dryer at a facility which is an area source subject to this subpart shall cause to be discharged into the atmosphere from the greenfield raw material dryer any gases which contain THC in excess of 50 ppmvd, reported as propane, corrected to seven percent oxygen.

(c) *Greenfield/major sources.* No owner or operator of a greenfield raw material dryer at a facility which is a major source subject to this subpart shall cause to be discharged into the atmosphere from the greenfield raw material dryer any gases which:

(1) Contain THC in excess of 50 ppmvd, reported as propane, corrected to seven percent oxygen.

(2) Exhibit opacity greater than ten percent.

§ 63.1347 Standards for raw and finish mills.

The owner or operator of each new or existing raw mill or finish mill at a facility which is a major source subject to the provisions of this subpart shall not cause to be discharged from the mill sweep or air separator air pollution control devices of these affected sources any gases which exhibit opacity in excess of ten percent.

§ 63.1348 Standards for affected sources other than kilns; in-line kiln/raw mills; clinker coolers; new and reconstructed raw material dryers; and raw and finish mills.

The owner or operator of each new or existing raw material, clinker, or finished product storage bin; conveying system transfer point; bagging system; and bulk loading or unloading system; and each existing raw material dryer, at a facility which is a major source subject to the provisions of this subpart shall not cause to be discharged any gases from these affected sources which exhibit opacity in excess of ten percent.

Monitoring and Compliance Provisions

§ 63.1349 Performance testing requirements.

(a) The owner or operator of an affected source subject to this subpart shall demonstrate initial compliance with the emission limits of § 63.1343 and §§ 63.1345 through 63.1348 using the test methods and procedures in paragraph (b) of this section and § 63.7. Performance test results shall be documented in complete test reports that contain the information required by paragraphs (a)(1) through (a)(10) of this section, as well as all other relevant information. The plan to be followed during testing shall be made available to the Administrator prior to testing, if requested.

(1) A brief description of the process and the air pollution control system;

(2) Sampling location description(s);

(3) A description of sampling and analytical procedures and any modifications to standard procedures;

(4) Test results;

(5) Quality assurance procedures and results;

(6) Records of operating conditions during the test, preparation of standards, and calibration procedures;

(7) Raw data sheets for field sampling and field and laboratory analyses;

(8) Documentation of calculations;

(9) All data recorded and used to establish parameters for compliance monitoring; and

(10) Any other information required by the test method.

(b) Performance tests to demonstrate initial compliance with this subpart shall be conducted as specified in paragraphs (b)(1) through (b)(4) of this section.

(1) The owner or operator of a kiln subject to limitations on particulate matter emissions shall demonstrate initial compliance by conducting a performance test as specified in paragraphs (b)(1)(i) through (b)(1)(iv) of this section. The owner or operator of an in-line kiln/raw mill subject to limitations on particulate matter emissions shall demonstrate initial compliance by conducting separate performance tests as specified in paragraphs (b)(1)(i) through (b)(1)(iv) of this section while the raw mill of the in-line kiln/raw mill is under normal operating conditions and while the raw mill of the in-line kiln/raw mill is not operating. The owner or operator of a clinker cooler subject to limitations on particulate matter emissions shall demonstrate initial compliance by conducting a performance test as specified in paragraphs (b)(1)(i) through (b)(1)(iii) of this section. The opacity exhibited during the period of the Method 5 of Appendix A to part 60 of this chapter performance tests required by paragraph (b)(1)(i) of this section shall be determined as required in paragraphs (b)(1)(v) through (vi) of this section.

(i) EPA Method 5 of appendix A to part 60 of this chapter shall be used to determine PM emissions. Each performance test shall consist of three separate runs under the conditions that exist when the affected source is operating at the highest load or capacity level reasonably expected to occur. Each run shall be conducted for at least one hour, and the minimum sample volume shall be 0.85 dscm (30 dscf). The average of the three runs shall be used to determine compliance. A determination of the particulate matter collected in the impingers (''back half'') of the Method 5 particulate sampling train is not required to demonstrate initial compliance with the PM standards of this subpart. However this shall not preclude the permitting authority from requiring a determination of the ''back half'' for other purposes.

(ii) Suitable methods shall be used to determine the kiln or inline kiln/raw mill feed rate, except for fuels, for each run.

(iii) The emission rate, E, of PM shall be computed for each run using equation 1:

$$E = (C_s Q_{sd})/P \qquad \text{(Eq. 1)}$$

Where:

E = emission rate of particulate matter, kg/Mg of kiln feed.
c_s = concentration of PM, kg/dscm.
Q_{sd} = volumetric flow rate of effluent gas, dscm/hr.
P = total kiln feed (dry basis), Mg/hr.

(iv) When there is an alkali bypass associated with a kiln or in-line kiln/raw mill, the main exhaust and alkali bypass of the kiln or in-line kiln/raw mill shall be tested simultaneously and the combined emission rate of particulate matter from the kiln or in-line kiln/raw mill and alkali bypass shall be computed for each run using equation 2,

$$E_c = \left(C_{sk}Q_{sdk} + C_{sb}Q_{sdb}\right)/P \qquad \text{(Eq. 2)}$$

Where:
E_c = the combined emission rate of particulate matter from the kiln or in-line kiln/raw mill and bypass stack, kg/Mg of kiln feed.
c_{sk} = concentration of particulate matter in the kiln or in-line kiln/raw mill effluent, kg/dscm.
Q_{sdk} = volumetric flow rate of kiln or in-line kiln/raw mill effluent, dscm/hr.
c_{sb} = concentration of particulate matter in the alkali bypass gas, kg/dscm.
Q_{sdb} = volumetric flow rate of alkali bypass gas, dscm/hr.
P=total kiln feed (dry basis), Mg/hr.

(v) Except as provided in paragraph (b)(1)(vi) of this section the opacity exhibited during the period of the Method 5 performance tests required by paragraph (b)(1)(i) of this section shall be determined through the use of a continuous opacity monitor (COM). The maximum six-minute average opacity during the three Method 5 test runs shall be determined during each Method 5 test run, and used to demonstrate initial compliance with the applicable opacity limits of § 63.1343(b)(2), § 63.1343(c)(2), or § 63.1345(a)(2).

(vi) Each owner or operator of a kiln, in-line kiln/raw mill, or clinker cooler subject to the provisions of this subpart using a fabric filter with multiple stacks or an electrostatic precipitator with multiple stacks may, in lieu of installing the continuous opacity monitoring system required by paragraph (b)(1)(v) of this section, conduct an opacity test in accordance with Method 9 of appendix A to part 60 of this chapter during each Method 5 performance test required by paragraph (b)(1)(i) of this section. If the control device exhausts through a monovent, or if the use of a COM in accordance with the installation specifications of Performance Specification 1 (PS–1) of appendix B to part 60 of this chapter is not feasible, a test shall be conducted in accordance with Method 9 of appendix A to part 60 of this chapter during each Method 5 performance test required by paragraph (b)(1)(i) of this section. The maximum six-minute average opacity shall be determined during the three Method 5 test runs, and used to demonstrate initial compliance with the applicable opacity limits of § 63.1343(b)(2), § 63.1343(c)(2), or § 63.1345(a)(2).

(2) The owner or operator of any affected source subject to limitations on opacity under this subpart that is not subject to paragraph (b)(1) of this section shall demonstrate initial compliance with the affected source opacity limit by conducting a test in accordance with Method 9 of appendix A to part 60 of this chapter. The performance test shall be conducted under the conditions that exist when the affected source is operating at the highest load or capacity level reasonably expected to occur. The maximum six-minute average opacity exhibited during the test period shall be used to determine whether the affected source is in initial compliance with the standard. The duration of the Method 9 performance test shall be 3-hours (30 6-minute averages), except that the duration of the Method 9 performance test may be reduced to 1-hour if the conditions of paragraphs (b)(2)(i) through (ii) of the section apply:

(i) There are no individual readings greater than 10 percent opacity;

(ii) There are no more than three readings of 10 percent for the first 1-hour period.

(3) The owner or operator of an affected source subject to limitations on D/F emissions shall demonstrate initial compliance with the D/F emission limit by conducting a performance test using Method 23 of appendix A to part 60 of this chapter. The owner or operator of an in-line kiln/raw mill shall demonstrate initial compliance by conducting separate performance tests while the raw mill of the in-line kiln/raw mill is under normal operating conditions and while the raw mill of the in-line kiln/raw mill is not operating. The owner or operator of a kiln or in-line kiln/raw mill equipped with an alkali bypass shall conduct simultaneous performance tests of the kiln or in-line kiln/raw mill exhaust and the alkali bypass, however the owner or operator of an in-line kiln/raw mill is not required to conduct a performance test of the alkali bypass exhaust when the raw mill of the in-line kiln/raw mill is not operating.

(i) Each performance test shall consist of three separate runs; each run shall be conducted under the conditions that exist when the affected source is operating at the highest load or capacity level reasonably expected to occur. The duration of each run shall be at least three hours and the sample volume for each run shall be at least 2.5 dscm (90 dscf). The concentration shall be determined for each run and the arithmetic average of the concentrations measured for the three runs shall be calculated and used to determine compliance.

(ii) The temperature at the inlet to the kiln or in-line kiln/raw mill PMCD, and where applicable, the temperature at the inlet to the alkali bypass PMCD, must be continuously recorded during the period of the Method 23 test, and the continuous temperature record(s) must be included in the performance test report.

(iii) One-minute average temperatures must be calculated for each minute of each run of the test.

(iv) The run average temperature must be calculated for each run, and the average of the run average temperatures must be determined and included in the performance test report and will determine the applicable temperature limit in accordance with § 63.1344(b).

(v) If activated carbon injection is used for D/F control, the rate of activated carbon injection to the kiln or in-line kiln/raw mill exhaust, and where applicable, the rate of activated carbon injection to the alkali bypass exhaust, must be continuously recorded during the period of the Method 23 test, and the continuous injection rate record(s) must be included in the performance test report. In addition, the performance test report must include the brand and type of activated carbon used during the performance test and a continuous record of either the carrier gas flow rate or the carrier gas pressure drop for the duration of the test. Activated carbon injection rate parameters must be determined in accordance with paragraphs (b)(3)(vi) of this section.

(vi) The run average injection rate must be calculated for each run, and the average of the run average injection rates must be determined and included in the performance test report and will determine the applicable injection rate limit in accordance with § 63.1344(c)(1).

(4) The owner or operator of an affected source subject to limitations on emissions of THC shall demonstrate initial compliance with the THC limit by operating a continuous emission monitor in accordance with Performance Specification 8A of appendix B to part 60 of this chapter. The duration of the performance test shall be three hours, and the average THC concentration (as calculated from the one-minute averages) during the three hour performance test shall be

calculated. The owner or operator of an in-line kiln/raw mill shall demonstrate initial compliance by conducting separate performance tests while the raw mill of the in-line kiln/raw mill is under normal operating conditions and while the raw mill of the in-line kiln/raw mill is not operating.

(c) Except as provided in paragraph (e) of this section, performance tests required under paragraphs (b)(1) and (b)(2) of this section shall be repeated every five years, except that the owner or operator of a kiln, in-line kiln/raw mill or clinker cooler is not required to repeat the initial performance test of opacity for the kiln, in-line kiln/raw mill or clinker cooler.

(d) Performance tests required under paragraph (b)(3) of this section shall be repeated every 30 months.

(e) The owner or operator is required to repeat the performance tests for kilns or in-line kiln/raw mills as specified in paragraphs (b)(1) and (b)(3) of this section within 90 days of initiating any significant change in the feed or fuel from that used in the previous performance test.

(f) Table 1 of this section provides a summary of the performance test requirements of this subpart.

TABLE 1 TO § 63.1349.—SUMMARY OF PERFORMANCE TEST REQUIREMENTS

Affected source and pollutant	Performance test
New and existing kiln and in-line kiln/raw mill [b c] PM	EPA Method 5.[a]
New and existing kiln and in-line kiln/raw mill [b c] Opacity	COM if feasible [d e] or EPA Method 9 visual opacity readings.
New and existing kiln and in-line kiln/raw mill [b c f g] D/F	EPA Method 23[h].
New greenfield kiln and in-line kiln/raw mill [c] THC	THC CEM (EPA PS–8A) [i].
New and existing clinker cooler PM	EPA Method 5 [a].
New and existing clinker cooler opacity	COM [d,j] or EPA Method 9 visual opacity readings.
New and existing raw and finish mill opacity	EPA Method 9.[a j]
New and existing raw material dryer and materials handling processes (raw material storage, clinker storage, finished product storage, conveyor transfer points, bagging, and bulk loading and unloading systems) opacity.	EPA Method 9.[a j]
New greenfield raw material dryer THC	THC CEM (EPA PS–8A).[i]

[a] Required initially and every 5 years thereafter.
[b] Includes main exhaust and alkali bypass.
[c] In-line kiln/raw mill to be tested with and without raw mill in operation.
[d] Must meet COM performance specification criteria. If the fabric filter or electrostatic precipitator has multiple stacks, daily EPA Method 9 visual opacity readings may be taken instead of using a COM.
[e] Opacity limit is 20 percent.
[f] Alkali bypass is tested with the raw mill on.
[g] Temperature and (if applicable) activated carbon injection parameters determined separately with and without the raw mill operating.
[h] Required initially and every 30 months thereafter.
[i] EPA Performance Specification (PS)–8A of appendix B to 40 CFR part 60.
[j] Opacity limit is 10 percent.

§ 63.1350 Monitoring requirements.

(a) The owner or operator of each portland cement plant shall prepare for each affected source subject to the provisions of this subpart, a written operations and maintenance plan. The plan shall be submitted to the Administrator for review and approval as part of the application for a part 70 permit and shall include the following information:

(1) Procedures for proper operation and maintenance of the affected source and air pollution control devices in order to meet the emission limits and operating limits of §§ 63.1343 through 63.1348;

(2) Corrective actions to be taken when required by paragraph (e) of this section;

(3) Procedures to be used during an inspection of the components of the combustion system of each kiln and each in-line kiln raw mill located at the facility at least once per year; and

(4) Procedures to be used to periodically monitor affected sources subject to opacity standards under §§ 63.1346 and 63.1348. Such procedures must include the provisions of paragraphs (a)(4)(i) through (a)(4)(iv) of this section.

(i) The owner or operator must conduct a monthly 1-minute visible emissions test of each affected source in accordance with Method 22 of Appendix A to part 60 of this chapter. The test must be conducted while the affected source is in operation.

(ii) If no visible emissions are observed in six consecutive monthly tests for any affected source, the owner or operator may decrease the frequency of testing from monthly to semi-annually for that affected source. If visible emissions are observed during any semi-annual test, the owner or operator must resume testing of that affected source on a monthly basis and maintain that schedule until no visible emissions are observed in six consecutive monthly tests.

(iii) If no visible emissions are observed during the semi-annual test for any affected source, the owner or operator may decrease the frequency of testing from semi-annually to annually for that affected source. If visible emissions are observed during any annual test, the owner or operator must resume testing of that affected source on a monthly basis and maintain that schedule until no visible emissions are observed in six consecutive monthly tests.

(iv) If visible emissions are observed during any Method 22 test, the owner or operator must conduct a 6-minute test of opacity in accordance with Method 9 of appendix A to part 60 of this chapter. The Method 9 test must begin within one hour of any observation of visible emissions.

(b) Failure to comply with any provision of the operations and maintenance plan developed in accordance with paragraph (a) of this section shall be a violation of the standard.

(c) The owner or operator of a kiln or in-line kiln/raw mill shall monitor opacity at each point where emissions are vented from these affected sources including alkali bypasses in accordance with paragraphs (c)(1) through (c)(3) of this section.

(1) Except as provided in paragraph (c)(2) of this section, the owner or operator shall install, calibrate, maintain, and continuously operate a

continuous opacity monitor (COM) located at the outlet of the PM control device to continuously monitor the opacity. The COM shall be installed, maintained, calibrated, and operated as required by subpart A, general provisions of this part, and according to PS–1 of appendix B to part 60 of this chapter.

(2) The owner or operator of a kiln or in-line kiln/raw mill subject to the provisions of this subpart using a fabric filter with multiple stacks or an electrostatic precipitator with multiple stacks may, in lieu of installing the continuous opacity monitoring system required by paragraph (c)(1) of this section, monitor opacity in accordance with paragraphs (c)(2)(i) through (ii) of this section. If the control device exhausts through a monovent, or if the use of a COM in accordance with the installation specifications of PS–1 of appendix B to part 60 of this chapter is not feasible, the owner or operator must monitor opacity in accordance with paragraphs (c)(2)(i) through (ii) of this section.

(i) Perform daily visual opacity observations of each stack in accordance with the procedures of Method 9 of appendix A of part 60 of this chapter. The Method 9 test shall be conducted while the affected source is operating at the highest load or capacity level reasonably expected to occur within the day. The duration of the Method 9 test shall be at least 30 minutes each day.

(ii) Use the Method 9 procedures to monitor and record the average opacity for each six-minute period during the test.

(3) To remain in compliance, the opacity must be maintained such that the 6-minute average opacity for any 6-minute block period does not exceed 20 percent. If the average opacity for any 6-minute block period exceeds 20 percent, this shall constitute a violation of the standard.

(d) The owner or operator of a clinker cooler shall monitor opacity at each point where emissions are vented from the clinker cooler in accordance with paragraphs (d)(1) through (d)(3) of this section.

(1) Except as provided in paragraph (d)(2) of this section, the owner or operator shall install, calibrate, maintain, and continuously operate a COM located at the outlet of the clinker cooler PM control device to continuously monitor the opacity. The COM shall be installed, maintained, calibrated, and operated as required by subpart A, general provisions of this part, and according to PS–1 of appendix B to part 60 of this chapter.

(2) The owner or operator of a clinker cooler subject to the provisions of this subpart using a fabric filter with multiple stacks or an electrostatic precipitator with multiple stacks may, in lieu of installing the continuous opacity monitoring system required by paragraph (d)(1) of this section, monitor opacity in accordance with paragraphs (d)(2)(i) through (ii) of this section. If the control device exhausts through a monovent, or if the use of a COM in accordance with the installation specifications of PS–1 of appendix B to part 60 of this chapter is not feasible, the owner or operator must monitor opacity in accordance with paragraphs (d)(2)(i) through (ii) of this section.

(i) Perform daily visual opacity observations of each stack in accordance with the procedures of Method 9 of appendix A of part 60 of this chapter. The Method 9 test shall be conducted while the affected source is operating at the highest load or capacity level reasonably expected to occur within the day. The duration of the Method 9 test shall be at least 30 minutes each day.

(ii) Use the Method 9 procedures to monitor and record the average opacity for each six-minute period during the test.

(3) To remain in compliance, the opacity must be maintained such that the 6-minute average opacity for any 6-minute block period does not exceed 10 percent. If the average opacity for any 6-minute block period exceeds 10 percent, this shall constitute a violation of the standard.

(e) The owner or operator of a raw mill or finish mill shall monitor opacity by conducting daily visual emissions observations of the mill sweep and air separator PMCDs of these affected sources, in accordance with the procedures of Method 22 of appendix A of part 60 of this chapter. The Method 22 test shall be conducted while the affected source is operating at the highest load or capacity level reasonably expected to occur within the day. The duration of the Method 22 test shall be six minutes. If visible emissions are observed during any Method 22 visible emissions test, the owner or operator must:

(1) Initiate, within one-hour, the corrective actions specified in the site specific operating and maintenance plan developed in accordance with paragraphs (a)(1) and (a)(2) of this section; and

(2) Within 24 hours of the end of the Method 22 test in which visible emissions were observed, conduct a visual opacity test of each stack from which visible emissions were observed in accordance with Method 9 of appendix A of part 60 of this chapter. The duration of the Method 9 test shall be thirty minutes.

(f) The owner or operator of an affected source subject to a limitation on D/F emissions shall monitor D/F emissions in accordance with paragraphs (f)(1) through (f)(6) of this section.

(1) The owner or operator shall install, calibrate, maintain, and continuously operate a continuous monitor to record the temperature of the exhaust gases from the kiln, in-line kiln/raw mill and alkali bypass, if applicable, at the inlet to, or upstream of, the kiln, in-line kiln/raw mill and/or alkali bypass PM control devices.

(i) The recorder response range must include zero and 1.5 times either of the average temperatures established according to the requirements in § 63.1349(b)(3)(iv).

(ii) The reference method must be a National Institute of Standards and Technology calibrated reference thermocouple-potentiometer system or alternate reference, subject to approval by the Administrator.

(2) The owner or operator shall monitor and continuously record the temperature of the exhaust gases from the kiln, in-line kiln/raw mill and alkali bypass, if applicable, at the inlet to the kiln, in-line kiln/raw mill and/or alkali bypass PMCD.

(3) The three-hour rolling average temperature shall be calculated as the average of 180 successive one-minute average temperatures.

(4) Periods of time when one-minute averages are not available shall be ignored when calculating three-hour rolling averages. When one-minute averages become available, the first one-minute average is added to the previous 179 values to calculate the three-hour rolling average.

(5) When the operating status of the raw mill of the in-line kiln/raw mill is changed from off to on, or from on to off the calculation of the three-hour rolling average temperature must begin anew, without considering previous recordings.

(6) The calibration of all thermocouples and other temperature sensors shall be verified at least once every three months.

(g) The owner or operator of an affected source subject to a limitation on D/F emissions that employs carbon injection as an emission control technique shall comply with the monitoring requirements of paragraphs (f)(1) through (f)(6) and (g)(1) through (g)(6) of this section to demonstrate continuous compliance with the D/F emission standard.

(1) Install, operate, calibrate and maintain a continuous monitor to record the rate of activated carbon injection. The accuracy of the rate measurement device must be ±1 percent of the rate being measured.

(2) Verify the calibration of the device at least once every three months.

(3) The three-hour rolling average activated carbon injection rate shall be calculated as the average of 180 successive one-minute average activated carbon injection rates.

(4) Periods of time when one-minute averages are not available shall be ignored when calculating three-hour rolling averages. When one-minute averages become available, the first one-minute average is added to the previous 179 values to calculate the three-hour rolling average.

(5) When the operating status of the raw mill of the in-line kiln/raw mill is changed from off to on, or from on to off the calculation of the three-hour rolling average activated carbon injection rate must begin anew, without considering previous recordings.

(6) The owner or operator must install, operate, calibrate and maintain a continuous monitor to record the activated carbon injection system carrier gas parameter (either the carrier gas flow rate or the carrier gas pressure drop) established during the D/F performance test in accordance with paragraphs (g)(6)(i) through (g)(6)(iii) of this section.

(i) The owner or operator shall install, calibrate, operate and maintain a device to continuously monitor and record the parameter value.

(ii) The owner or operator must calculate and record three-hour rolling averages of the parameter value.

(iii) Periods of time when one-minute averages are not available shall be ignored when calculating three-hour rolling averages. When one-minute averages become available, the first one-minute average shall be added to the previous 179 values to calculate the three-hour rolling average.

(h) The owner or operator of an affected source subject to a limitation on THC emissions under this subpart shall comply with the monitoring requirements of paragraphs (h)(1) through (h)(3) of this section to demonstrate continuous compliance with the THC emission standard:

(1) The owner or operator shall install, operate and maintain a THC continuous emission monitoring system in accordance with Performance Specification 8A, of appendix B to part 60 of this chapter and comply with all of the requirements for continuous monitoring systems found in the general provisions, subpart A of this part.

(2) The owner or operator is not required to calculate hourly rolling averages in accordance with section 4.9 of Performance Specification 8A.

(3) Any thirty-day block average THC concentration in any gas discharged from a greenfield raw material dryer, the main exhaust of a greenfield kiln, or the main exhaust of a greenfield in-line kiln/raw mill, exceeding 50 ppmvd, reported as propane, corrected to seven percent oxygen, is a violation of the standard.

(i) The owner or operator of any kiln or in-line kiln/raw mill subject to a D/F emission limit under this subpart shall conduct an inspection of the components of the combustion system of each kiln or in-line kiln raw mill at least once per year.

(j) The owner or operator of an affected source subject to a limitation on opacity under § 63.1346 or § 63.1348 shall monitor opacity in accordance with the operation and maintenance plan developed in accordance with paragraph (a) of this section.

(k) The owner or operator of an affected source subject to a particulate matter standard under § 63.1343 shall install, calibrate, maintain and operate a particulate matter continuous emission monitoring system (PM CEMS) to measure the particulate matter discharged to the atmosphere. The compliance deadline for installing the PM CEMS and all requirements relating to performance of the PM CEMS and implementation of the PM CEMS requirement is deferred pending further rulemaking.

(l) An owner or operator may submit an application to the Administrator for approval of alternate monitoring requirements to demonstrate compliance with the emission standards of this subpart, except for emission standards for THC, subject to the provisions of paragraphs (l)(1) through (l)(6) of this section.

(1) The Administrator will not approve averaging periods other than those specified in this section, unless the owner or operator documents, using data or information, that the longer averaging period will ensure that emissions do not exceed levels achieved during the performance test over any increment of time equivalent to the time required to conduct three runs of the performance test.

(2) If the application to use an alternate monitoring requirement is approved, the owner or operator must continue to use the original monitoring requirement until approval is received to use another monitoring requirement.

(3) The owner or operator shall submit the application for approval of alternate monitoring requirements no later than the notification of performance test. The application must contain the information specified in paragraphs (l)(3)(i) through (l)(3)(iii) of this section:

(i) Data or information justifying the request, such as the technical or economic infeasibility, or the impracticality of using the required approach;

(ii) A description of the proposed alternative monitoring requirement, including the operating parameter to be monitored, the monitoring approach and technique, the averaging period for the limit, and how the limit is to be calculated; and

(iii) Data or information documenting that the alternative monitoring requirement would provide equivalent or better assurance of compliance with the relevant emission standard.

(4) The Administrator will notify the owner or operator of the approval or denial of the application within 90 calendar days after receipt of the original request, or within 60 calendar days of the receipt of any supplementary information, whichever is later. The Administrator will not approve an alternate monitoring application unless it would provide equivalent or better assurance of compliance with the relevant emission standard. Before disapproving any alternate monitoring application, the Administrator will provide:

(i) Notice of the information and findings upon which the intended disapproval is based; and

(ii) Notice of opportunity for the owner or operator to present additional supporting information before final action is taken on the application. This notice will specify how much additional time is allowed for the owner or operator to provide additional supporting information.

(5) The owner or operator is responsible for submitting any supporting information in a timely manner to enable the Administrator to consider the application prior to the performance test. Neither submittal of an application, nor the Administrator's failure to approve or disapprove the application relieves the owner or operator of the responsibility to comply with any provision of this subpart.

(6) The Administrator may decide at any time, on a case-by-case basis that additional or alternative operating limits, or alternative approaches to establishing operating limits, are necessary to demonstrate compliance with the emission standards of this subpart.

(m) A summary of the monitoring requirements of this subpart is given in Table 1 to this section.

TABLE 1 TO § 63.1350.—MONITORING REQUIREMENTS

Affected source/pollutant or opacity	Monitor type/operation/process	Monitoring requirements
All affected sources	Operations and maintenance plan	Prepare written plan for all affected sources and control devices.
All kilns and in-line kiln raw mills at major sources (including alkali bypass)/opacity.	Continuous opacity monitor, if applicable	Install, calibrate, maintain and operate in accordance with general provisions and with PS–1.
	Method 9 opacity test, if applicable	Daily test of at least 30-minutes, while kiln is at highest load or capacity level.
Kilns and in-line kiln raw mills at major sources (including alkali bypass)/particulate matter.	Particulate matter continuous emission monitoring system.	Deferred.
Kilns and in-line kiln raw mills at major and area sources (including alkali bypass)/ D/F.	Combustion system inspection	Conduct annual inspection of components of combustion system.
	Continuous temperature monitoring at PMCD inlet.	Install, operate, calibrate and maintain continuous temperature monitoring and recording system; calculate three-hour rolling averages; verify temperature sensor calibration at least quarterly.
Kilns and in-line kiln raw mills at major and area sources (including alkali bypass)/ D/F (continued).	Activated carbon injection rate monitor, if applicable.	Install, operate, calibrate and maintain continuous activated carbon injection rate monitor; calculate three-hour rolling averages; verify calibration at least quarterly; install, operate, calibrate and maintain carrier gas flow rate monitor or carrier gas pressure drop monitor; calculate three-hour rolling averages; document carbon specifications.
New greenfield kilns and in-line kiln raw mills at major and area sources/THC.	Total hydrocarbon continuous emission monitor.	Install, operate, and maintain THC CEM in accordance with PS–8A; calculate 30-day block average THC concentration.
Clinker coolers at major sources/opacity	Continuous opacity monitor, if applicable	Install, calibrate, maintain and operate in accordance with general provisions and with PS–1.
	Method 9 opacity test, if applicable	Daily test of at least 30-minutes, while kiln is at highest load or capacity level.
Raw mills and finish mills at major sources/ opacity.	Method 22 visible emissions test	Conduct daily 6-minute Method 22 visible emissions test while mill is operating at highest load or capacity level; if visible emissions are observed, initiate corrective action within one hour and conduct 30-minute Method 9 test within 24 hours.
New greenfield raw material dryers at major and area sources/THC.	Total hydrocarbon continuous emission monitor.	Install, operate, and maintain THC CEM in accordance with PS–8A; calculate 30-day block average THC concentration.
Raw material dryers; raw material, clinker, finished product storage bins; conveying system transfer points; bagging systems; and bulk loading and unloading systems at major sources/opacity.	Method 22 visible emissions test	As specified in operation and maintenance plan.

§ 63.1351 Compliance dates.

(a) The compliance date for an owner or operator of an existing affected source subject to the provisions of this subpart is June 10, 2002.

(b) The compliance date for an owner or operator of an affected source subject to the provisions of this subpart that commences new construction or reconstruction after March 24, 1998 is June 9, 1999 or immediately upon startup of operations, whichever is later.

6§ 3.1352 Additional test methods.

(a) Owners or operators conducting tests to determine the rates of emission of hydrogen chloride (HCl) from kilns, in-line kiln/raw mills and associated bypass stacks at portland cement manufacturing facilities, for use in applicability determinations under § 63.1340 are permitted to use Method 320 or Method 321 of appendix A of this part.

(b) Owners or operators conducting tests to determine the rates of emission of hydrogen chloride (HCl) from kilns, in-line kiln/raw mills and associated bypass stacks at portland cement manufacturing facilities, for use in applicability determinations under § 63.1340 are permitted to use Methods 26 or 26A of appendix A to part 60 of this chapter, except that the results of these tests shall not be used to establish status as an area source.

(c) Owners or operators conducting tests to determine the rates of emission of specific organic HAP from raw material dryers, kilns and in-line kiln/ raw mills at portland cement manufacturing facilities, for use in applicability determinations under § 63.1340 of this subpart are permitted to use Method 320 of appendix A to this part, or Method 18 of appendix A to part 60 of this chapter.

Notification, Reporting and Recordkeeping

§ 63.1353 Notification requirements.

(a) The notification provisions of 40 CFR part 63, subpart A that apply and those that do not apply to owners and operators of affected sources subject to this subpart are listed in Table 1 of this subpart. If any State requires a notice that contains all of the information required in a notification listed in this section, the owner or operator may send the Administrator a copy of the notice sent to the State to satisfy the requirements of this section for that notification.

(b) Each owner or operator subject to the requirements of this subpart shall comply with the notification requirements in § 63.9 as follows:

(1) Initial notifications as required by § 63.9(b) through (d). For the purposes of this subpart, a Title V or 40 CFR part 70 permit application may be used in lieu of the initial notification required under § 63.9(b), provided the same information is contained in the permit application as required by § 63.9(b), and the State to which the permit application has been submitted has an approved operating permit program under part 70 of this chapter and has received delegation of authority from the EPA. Permit applications shall be submitted by the same due dates as those specified for the initial notification.

(2) Notification of performance tests, as required by §§ 63.7 and 63.9(e).

(3) Notification of opacity and visible emission observations required by § 63.1349 in accordance with §§ 63.6(h)(5) and 63.9(f).

(4) Notification, as required by § 63.9(g), of the date that the continuous emission monitor performance evaluation required by § 63.8(e) is scheduled to begin.

(5) Notification of compliance status, as required by § 63.9(h).

§ 63.1354 Reporting requirements.

(a) The reporting provisions of subpart A of this part that apply and those that do not apply to owners or operators of affected sources subject to this subpart are listed in Table 1 of this subpart. If any State requires a report that contains all of the information required in a report listed in this section, the owner or operator may send the Administrator a copy of the report sent to the State to satisfy the requirements of this section for that report.

(b) The owner or operator of an affected source shall comply with the reporting requirements specified in § 63.10 of the general provisions of this part 63, subpart A as follows:

(1) As required by § 63.10(d)(2), the owner or operator shall report the results of performance tests as part of the notification of compliance status.

(2) As required by § 63.10(d)(3), the owner or operator of an affected source shall report the opacity results from tests required by § 63.1349.

(3) As required by § 63.10(d)(4), the owner or operator of an affected source who is required to submit progress reports as a condition of receiving an extension of compliance under § 63.6(i) shall submit such reports by the dates specified in the written extension of compliance.

(4) As required by § 63.10(d)(5), if actions taken by an owner or operator during a startup, shutdown, or malfunction of an affected source (including actions taken to correct a malfunction) are consistent with the procedures specified in the source's startup, shutdown, and malfunction plan specified in § 63.6(e)(3), the owner or operator shall state such information in a semiannual report. Reports shall only be required if a startup, shutdown, or malfunction occurred during the reporting period. The startup, shutdown, and malfunction report may be submitted simultaneously with the excess emissions and continuous monitoring system performance reports; and

(5) Any time an action taken by an owner or operator during a startup, shutdown, or malfunction (including actions taken to correct a malfunction) is not consistent with the procedures in the startup, shutdown, and malfunction plan, the owner or operator shall make an immediate report of the actions taken for that event within 2 working days, by telephone call or facsimile (FAX) transmission. The immediate report shall be followed by a letter, certified by the owner or operator or other responsible official, explaining the circumstances of the event, the reasons for not following the startup, shutdown, and malfunction plan, and whether any excess emissions and/or parameter monitoring exceedances are believed to have occurred.

(6) As required by § 63.10(e)(2), the owner or operator shall submit a written report of the results of the performance evaluation for the continuous monitoring system required by § 63.8(e). The owner or operator shall submit the report simultaneously with the results of the performance test.

(7) As required by § 63.10(e)(2), the owner or operator of an affected source using a continuous opacity monitoring system to determine opacity compliance during any performance test required under § 63.7 and described in § 63.6(d)(6) shall report the results of the continuous opacity monitoring system performance evaluation conducted under § 63.8(e).

(8) As required by § 63.10(e)(3), the owner or operator of an affected source equipped with a continuous emission monitor shall submit an excess emissions and continuous monitoring system performance report for any event when the continuous monitoring system data indicate the source is not in compliance with the applicable emission limitation or operating parameter limit.

(9) The owner or operator shall submit a summary report semiannually which contains the information specified in § 63.10(e)(3)(vi). In addition, the summary report shall include:

(i) All exceedences of maximum control device inlet gas temperature limits specified in § 63.1344(a) and (b);

(ii) All failures to calibrate thermocouples and other temperature sensors as required under § 63.1350(f)(7) of this subpart; and

(iii) All failures to maintain the activated carbon injection rate, and the activated carbon injection carrier gas flow rate or pressure drop, as applicable, as required under § 63.1344(c).

(iv) The results of any combustion system component inspections conducted within the reporting period as required under § 63.1350(i).

(v) All failures to comply with any provision of the operation and maintenance plan developed in accordance with § 63.1350(a).

(10) If the total continuous monitoring system downtime for any CEM or any continuous monitoring system (CMS) for the reporting period is ten percent or greater of the total operating time for the reporting period, the owner or operator shall submit an excess emissions and continuous monitoring system performance report along with the summary report.

§ 63.1355 Recordkeeping requirements.

(a) The owner or operator shall maintain files of all information (including all reports and notifications) required by this section recorded in a form suitable and readily available for inspection and review as required by § 63.10(b)(1). The files shall be retained for at least five years following the date of each occurrence, measurement, maintenance, corrective action, report, or record. At a minimum, the most recent two years of data shall be retained on site. The remaining three

years of data may be retained off site. The files may be maintained on microfilm, on a computer, on floppy disks, on magnetic tape, or on microfiche.

(b) The owner or operator shall maintain records for each affected source as required by § 63.10(b)(2) and (b)(3) of this part; and

(1) All documentation supporting initial notifications and notifications of compliance status under § 63.9;

(2) All records of applicability determination, including supporting analyses; and

(3) If the owner or operator has been granted a waiver under § 63.8(f)(6), any information demonstrating whether a source is meeting the requirements for a waiver of recordkeeping or reporting requirements.

(c) In addition to the recordkeeping requirements in paragraph (b) of this section, the owner or operator of an affected source equipped with a continuous monitoring system shall maintain all records required by § 63.10(c).

Other

§ 63.1356 Exemption from new source performance standards.

(a) Except as provided in paragraphs (a)(1) and (a)(2) of this section, any affected source subject to the provisions of this subpart is exempted from any otherwise applicable new source performance standard contained in 40 CFR part 60, subpart F.

(1) Kilns and in-line kiln/raw mills, as applicable under 40 CFR 60.60(b), located at area sources are subject to PM and opacity limits and associated reporting and recordkeeping, under 40 CFR part 60, subpart F.

(2) Greenfield raw material dryers, as applicable under 40 CFR 60.60(b), located at area sources are subject to opacity limits and associated reporting and recordkeeping under 40 CFR part 60, subpart F.

§ 63.1357 Temporary, conditioned exemption from particulate matter and opacity standards.

(a) Subject to the limitations of paragraphs (b) through (f) of this section, an owner or operator conducting PM CEMS correlation tests (that is, correlation with manual stack methods) is exempt from:

(1) Any particulate matter and opacity standards of part 60 or part 63 of this chapter that are applicable to cement kilns and in-line kiln/raw mills.

(2) Any permit or other emissions or operating parameter or other limitation on workplace practices that are applicable to cement kilns and in-line kiln raw mills to ensure compliance with any particulate matter and opacity standards of this part or part 60 of this chapter.

(b) The owner or operator must develop a PM CEMS correlation test plan. The plan must be submitted to the Administrator for approval at least 90 days before the correlation test is scheduled to be conducted. The plan must include:

(1) The number of test conditions and the number of runs for each test condition;

(2) The target particulate matter emission level for each test condition;

(3) How the operation of the affected source will be modified to attain the desired particulate matter emission rate; and

(4) The anticipated normal particulate matter emission level.

(c) The Administrator will review and approve or disapprove the correlation test plan in accordance with § 63.7(c)(3)(i) and (iii). If the Administrator fails to approve or disapprove the correlation test plan within the time period specified in § 63.7(c)(3)(iii), the plan shall be considered approved, unless the Administrator has requested additional information.

(d) The stack sampling team must be on-site and prepared to perform correlation testing no later than 24 hours after operations are modified to attain the desired particulate matter emissions concentrations, unless the correlation test plan documents that a longer period is appropriate.

(e) The particulate matter and opacity standards and associated operating limits and conditions will not be waived for more than 96 hours, in the aggregate, for a correlation test, including all runs and conditions.

(f) The owner or operator must return the affected source to operating conditions indicative of compliance with the applicable particulate matter and opacity standards as soon as possible after correlation testing is completed.

§ 63.1358 Delegation of authority.

(a) In delegating implementation and enforcement authority to a State under subpart E of this part, the authorities contained in paragraph (b) of this section shall be retained by the Administrator and not transferred to a State.

(b) Authority which will not be delegated to States:

(1) Approval of alternative non-opacity emission standards under § 63.6(g).

(2) Approval of alternative opacity standards under § 63.6(h)(9).

(3) Approval of major changes to test methods under §§ 63.7(e)(2)(ii) and 63.7(f). A major change to a test method is a modification to a federally enforceable test method that uses unproven technology or procedures or is an entirely new method (sometimes necessary when the required test method is unsuitable).

(4) Approval of major changes to monitoring under § 63.8(f). A major change to monitoring is a modification to federally enforceable monitoring that uses unproven technology or procedures, is an entirely new method (sometimes necessary when the required monitoring is unsuitable), or is a change in the averaging period.

(5) Waiver of recordkeeping under § 63.10(f).

§ 63.1359 [Reserved]

TABLE 1 TO SUBPART LLL.—APPLICABILITY OF GENERAL PROVISIONS

General Provisions 40 CFR Citation	Requirement	Applies to Subpart LLL	Comment
63.1(a)(1) through (4)	Applicability	Yes.	
63.1(a)(5)		No	[Reserved].
63.1(a)(6) through (a)(8)	Applicability	Yes.	
63.1(a)(9)		No	[Reserved].
63.1(a)(10) through (14)	Applicability	Yes.	
63.1(b)(1)	Initial Applicability Determination	No	§ 63.1340 specifies applicability.
63.1(b)(2) and (3)	Initial Applicability Determination	Yes.	
63.1(c)(1)	Applicability After Standard Established	Yes.	
63.1(c)(2)	Permit Requirements	Yes	Area sources must obtain Title V permits.

TABLE 1 TO SUBPART LLL.—APPLICABILITY OF GENERAL PROVISIONS—Continued

General Provisions 40 CFR Citation	Requirement	Applies to Subpart LLL	Comment
63.1(c)(3)		No	[Reserved].
63.1(c)(4) and (5)	Extensions, Notifications	Yes.	
63.1(d)		No	[Reserved].
63.1(e)	Applicability of Permit Program	Yes.	
63.2	Definitions	Yes.	Additional definitions in § 63.1341.
63.3(a) through (c)	Units and Abbreviations	Yes.	
63.4(a)(1) through (a)(3)	Prohibited Activities	Yes.	
63.4(a)(4)		No	[Reserved].
63.4(a)(5)	Compliance date	Yes.	
63.4(b) and (c)	Circumvention, Severability	Yes.	
63.5(a)(1) and (2)	Construction/Reconstruction	Yes.	
63.5(b)(1)	Compliance Dates	Yes.	
63.5(b)(2)		No	[Reserved].
63.5(b)(3) through (6)	Construction Approval, Applicability	Yes.	
63.5(c)		No	[Reserved].
63.5(d)(1) through (4)	Approval of Construction/Reconstruction	Yes.	
63.5(e)	Approval of Construction/Reconstruction	Yes.	
63.5(f)(1) and (2)	Approval of Construction/Reconstruction	Yes.	
63.6(a)	Compliance for Standards and Maintenance.	Yes.	
63.6(b)(1) through (5)	Compliance Dates	Yes.	
63.6(b)(6)		No	[Reserved].
63.6(b)(7)	Compliance Dates	Yes.	
63.6(c)(1) and (2)	Compliance Dates	Yes.	
63.6(c)(3) and (c)(4)		No	[Reserved].
63.6(c)(5)	Compliance Dates	Yes.	
63.6(d)		No	[Reserved].
63.6(e)(1) and (e)(2)	Operation & Maintenance	Yes.	
63.6(e)(3)	Startup, Shutdown Malfunction Plan	Yes.	
63.6(f)(1) through (3)	Compliance with Emission Standards	Yes.	
63.6(g)(1) through (g)(3)	Alternative Standard	Yes.	
63.6(h)(1) and (2)	Opacity/VE Standards	Yes.	
63.6(h)(3)		No	Reserved
63.6(h)(4) and (h)(5)(i)	Opacity/VE Standards	Yes.	
63.6(h)(5)(ii) through (iv)	Opacity/VE Standards	No	Test duration specified in Subpart LLL.
63.6(h)(6)	Opacity/VE Standards	Yes.	
63.6(i)(1) through (i)(14)	Extension of Compliance	Yes.	
63.6(i)(15)		No	[Reserved].
63.6(i)(16)	Extension of Compliance	Yes.	
63.6(j)	Exemption from Compliance	Yes.	
63.7(a)(1) through (a)(3)	Performance Testing Requirements	Yes	§ 63.1349 has specific requirements.
63.7(b)	Notification	Yes.	
63.7(c)	Quality Assurance/Test Plan	Yes.	
63.7(d)	Testing Facilities	Yes.	
63.7(e)(1) through (4)	Conduct of Tests	Yes.	
63.7(f)	Alternative Test Method	Yes.	
63.7(g)	Data Analysis	Yes.	
63.7(h)	Waiver of Tests	Yes.	
63.8(a)(1)	Monitoring Requirements	Yes.	
63.8(a)(2)	Monitoring	No	§ 63.1350 includes CEM requirements.
63.8(a)(3)		No	[Reserved].
63.8(a)(4)	Monitoring	No	Flares not applicable.
63.8(b)(1) through (3)	Conduct of Monitoring	Yes.	
63.8(c)(1) through (8)	CMS Operation/ Maintenance	Yes.	Performance specification supersedes requirements for THC CEM. Temperature and activated carbon injection monitoring data reduction requirements given in subpart LLL.
63.8(d)	Quality Control	Yes.	
63.8(e)	Performance Evaluation for CMS	Yes	Performance specification supersedes requirements for THC CEM.
63.8(f)(1) through (f)(5)	Alternative Monitoring Method	Yes	Additional requirements in § 1350(l).
63.8(f)(6)	Alternative to RATA Test	Yes.	
63.8(g)	Data Reduction	Yes.	
63.9(a)	Notification Requirements	Yes.	
63.9(b)(1) through (5)	Initial Notifications	Yes.	
63.9(c)	Request for Compliance Extension	Yes.	
63.9(d)	New Source Notification for Special Compliance Requirements.	Yes.	
63.9(e)	Notification of Performance Test	Yes.	
63.9(f)	Notification of VE/Opacity Test	Yes	Notification not required for VE/ opacity test under § 63.1350(e) and (j).

TABLE 1 TO SUBPART LLL.—APPLICABILITY OF GENERAL PROVISIONS—Continued

General Provisions 40 CFR Citation	Requirement	Applies to Subpart LLL	Comment
63.9(g)	Additional CMS Notifications	Yes.	
63.9(h)(1) through (h)(3)	Notification of Compliance Status	Yes.	
63.9(h)(4)		No	[Reserved].
63.9(h)(5) and (h)(6)	Notification of Compliance Status	Yes.	
63.9(i)	Adjustment of Deadlines	Yes.	
63.9(j)	Change in Previous Information	Yes.	
63.10(a)	Recordkeeping/Reporting	Yes	Yes.
63.10(b)	General Requirements	Yes.	
63.10(c)(1)	Additional CMS Recordkeeping	Yes	PS–8A applies.
63.10(c)(2) through (c)(4)		No	Reserved]
63.10(c)(5) through (c)(8)	Additional CMS Recordkeeping	Yes	PS–8A applies instead of requirements for THC CEM.
63.10(c)(9)		No	[Reserved]
63.10(c)(10) through (15)	Additional CMS Recordkeeping	Yes	PS–8A applies instead of requirements for THC CEM.
63.10(d)(1)	General Reporting Requirements	Yes.	
63.10(d)(2)	Performance Test Results	Yes.	
63.10(d)(3)	Opacity or VE Observations	Yes.	
63.10(d)(4)	Progress Reports	Yes.	
63.10(d)(5)	Startup, Shutdown, Malfunction Reports	Yes.	
63.10(e)(1) and (e)(2)	Additional CMS Reports	Yes.	
63.10(e)(3)	Excess Emissions and CMS Performance Reports.	Yes	Exceedences are defined in subpart LLL.
63.10(f)	Waiver for Recordkeeping/ Reporting	Yes.	
63.11(a) and (b)	Control Device Requirements	No	Flares not applicable.
63.12(a)–(c	)State Authority and Delegations	Yes.	
63.13(a)–(c)	State/Regional Addresses	Yes.	
63.14(a) and (b)	Incorporation by Reference	Yes.	
63.15(a) and (b)	Availability of Information	Yes.	

3. Appendix A of part 63 is amended by adding, in numerical order, Methods 320 and 321 to read as follows:

Appendix A to Part 63—Test Methods

* * * * *

Test Method 320—Measurement of Vapor Phase Organic and Inorganic Emissions by Extractive Fourier Transform Infrared (FTIR) Spectroscopy

1.0 *Introduction.*

Persons unfamiliar with basic elements of FTIR spectroscopy should not attempt to use this method. This method describes sampling and analytical procedures for extractive emission measurements using Fourier transform infrared (FTIR) spectroscopy. Detailed analytical procedures for interpreting infrared spectra are described in the ''Protocol for the Use of Extractive Fourier Transform Infrared (FTIR) Spectrometry in Analyses of Gaseous Emissions from Stationary Sources,'' hereafter referred to as the ''Protocol.'' Definitions not given in this method are given in appendix A of the Protocol. References to specific sections in the Protocol are made throughout this Method. For additional information refer to references 1 and 2, and other EPA reports, which describe the use of FTIR spectrometry in specific field measurement applications and validation tests. The sampling procedure described here is extractive. Flue gas is extracted through a heated gas transport and handling system. For some sources, sample conditioning systems may be applicable. Some examples are given in this method.

Note: sample conditioning systems may be used providing the method validation requirements in Sections 9.2 and 13.0 of this method are met.

1.1 *Scope and Applicability.*

1.1.1 *Analytes.* Analytes include hazardous air pollutants (HAPs) for which EPA reference spectra have been developed. Other compounds can also be measured with this method if reference spectra are prepared according to section 4.6 of the protocol.

1.1.2 *Applicability.* This method applies to the analysis of vapor phase organic or inorganic compounds which absorb energy in the mid-infrared spectral region, about 400 to 4000 cm^{-1} (25 to 2.5 μm). This method is used to determine compound-specific concentrations in a multi-component vapor phase sample, which is contained in a closed-path gas cell. Spectra of samples are collected using double beam infrared absorption spectroscopy. A computer program is used to analyze spectra and report compound concentrations.

1.2 *Method Range and Sensitivity.* Analytical range and sensitivity depend on the frequency-dependent analyte absorptivity, instrument configuration, data collection parameters, and gas stream composition. Instrument factors include: (a) spectral resolution, (b) interferometer signal averaging time, (c) detector sensitivity and response, and (d) absorption path length.

1.2.1 For any optical configuration the analytical range is between the absorbance values of about .01 (infrared transmittance relative to the background = 0.98) and 1.0 (T = 0.1). (For absorbance > 1.0 the relation between absorbance and concentration may not be linear.)

1.2.2 The concentrations associated with this absorbance range depend primarily on the cell path length and the sample temperature. An analyte absorbance greater than 1.0, can be lowered by decreasing the optical path length. Analyte absorbance increases with a longer path length. Analyte detection also depends on the presence of other species exhibiting absorbance in the same analytical region. Additionally, the estimated lower absorbance (A) limit (A = 0.01) depends on the root mean square deviation (RMSD) noise in the analytical region.

1.2.3 The concentration range of this method is determined by the choice of optical configuration.

1.2.3.1 The absorbance for a given concentration can be decreased by decreasing the path length or by diluting the sample. There is no practical upper limit to the measurement range.

1.2.3.2 The analyte absorbance for a given concentration may be increased by increasing the cell path length or (to some extent) using a higher resolution. Both modifications also cause a corresponding increased absorbance for all compounds in the sample, and a decrease in the signal throughput. For this reason the practical lower detection range (quantitation limit) usually depends on sample characteristics such as moisture content of the gas, the presence of other interferants, and losses in the sampling system.

1.3 *Sensitivity.* The limit of sensitivity for an optical configuration and integration time is determined using appendix D of the Protocol: Minimum Analyte Uncertainty, (MAU). The MAU depends on the RMSD noise in an analytical region, and on the absorptivity of the analyte in the same region.

1.4 *Data Quality.* Data quality shall be determined by executing Protocol pre-test procedures in appendices B to H of the protocol and post-test procedures in appendices I and J of the protocol.

1.4.1 Measurement objectives shall be established by the choice of detection limit (DL_i) and analytical uncertainty (AU_i) for each analyte.

1.4.2 An instrumental configuration shall be selected. An estimate of gas composition shall be made based on previous test data, data from a similar source or information gathered in a pre-test site survey. Spectral interferants shall be identified using the selected DL_i and AU_i and band areas from reference spectra and interferant spectra. The baseline noise of the system shall be measured in each analytical region to determine the MAU of the instrument configuration for each analyte and interferant (MIU_i).

1.4.3 Data quality for the application shall be determined, in part, by measuring the RMS (root mean square) noise level in each analytical spectral region (appendix C of the Protocol). The RMS noise is defined as the RMSD of the absorbance values in an analytical region from the mean absorbance value in the region.

1.4.4 The MAU is the minimum analyte concentration for which the AU_i can be maintained; if the measured analyte concentration is less than MAU_i, then data quality are unacceptable.

2.0 *Summary of Method*

2.1 *Principle.* References 4 through 7 provide background material on infrared spectroscopy and quantitative analysis. A summary is given in this section.

2.1.1 Infrared absorption spectroscopy is performed by directing an infrared beam through a sample to a detector. The frequency-dependent infrared absorbance of the sample is measured by comparing this detector signal (single beam spectrum) to a signal obtained without a sample in the beam path (background).

2.1.2 Most molecules absorb infrared radiation and the absorbance occurs in a characteristic and reproducible pattern. The infrared spectrum measures fundamental molecular properties and a compound can be identified from its infrared spectrum alone.

2.1.3 Within constraints, there is a linear relationship between infrared absorption and compound concentration. If this frequency dependent relationship (absorptivity) is known (measured), it can be used to determine compound concentration in a sample mixture.

2.1.4 Absorptivity is measured by preparing, in the laboratory, standard samples of compounds at known concentrations and measuring the FTIR ''reference spectra'' of these standard samples. These ''reference spectra'' are then used in sample analysis: (1) Compounds are detected by matching sample absorbance bands with bands in reference spectra, and (2) concentrations are measured by comparing sample band intensities with reference band intensities.

2.1.5 This method is self-validating provided that the results meet the performance requirement of the QA spike in sections 8.6.2 and 9.0 of this method, and results from a previous method validation study support the use of this method in the application.

2.2 *Sampling and Analysis.* In extractive sampling a probe assembly and pump are used to extract gas from the exhaust of the affected source and transport the sample to the FTIR gas cell. Typically, the sampling apparatus is similar to that used for single-component continuous emission monitor (CEM) measurements.

2.2.1 The digitized infrared spectrum of the sample in the FTIR gas cell is measured and stored on a computer. Absorbance band intensities in the spectrum are related to sample concentrations by what is commonly referred to as Beer's Law.

$$A_i = a_i b c_i \qquad (1)$$

Where:

A_i = absorbance at a given frequency of the ith sample component.

a_i = absorption coefficient (absorptivity) of the ith sample component.

b = path length of the cell.

c_i = concentration of the ith sample component.

2.2.2 Analyte spiking is used for quality assurance (QA). In this procedure (section 8.6.2 of this method) an analyte is spiked into the gas stream at the back end of the sample probe. Analyte concentrations in the spiked samples are compared to analyte concentrations in unspiked samples. Since the concentration of the spike is known, this procedure can be used to determine if the sampling system is removing the spiked analyte(s) from the sample stream.

2.3 *Reference Spectra Availability.* Reference spectra of over 100 HAPs are available in the EPA FTIR spectral library on the EMTIC (Emission Measurement Technical Information Center) computer bulletin board service and at internet address http://info.arnold.af.mil/epa/welcome.htm. Reference spectra for HAPs, or other analytes, may also be prepared according to section 4.6 of the Protocol.

2.4 *Operator Requirements.* The FTIR analyst shall be trained in setting up the instrumentation, verifying the instrument is functioning properly, and performing routine maintenance. The analyst must evaluate the initial sample spectra to determine if the sample matrix is consistent with pre-test assumptions and if the instrument configuration is suitable. The analyst must be able to modify the instrument configuration, if necessary.

2.4.1 The spectral analysis shall be supervised by someone familiar with EPA FTIR Protocol procedures.

2.4.2 A technician trained in instrumental test methods is qualified to install and operate the sampling system. This includes installing the probe and heated line assembly, operating the analyte spike system, and performing moisture and flow measurements.

3.0 *Definitions*

See appendix A of the Protocol for definitions relating to infrared spectroscopy. Additional definitions are given in sections 3.1 through 3.29.

3.1 *Analyte.* A compound that this method is used to measure. The term ''target analyte'' is also used. This method is multi-component and a number of analytes can be targeted for a test.

3.2 *Reference Spectrum.* Infrared spectrum of an analyte prepared under controlled, documented, and reproducible laboratory conditions according to procedures in section 4.6 of the Protocol. A library of reference spectra is used to measure analytes in gas samples.

3.3 *Standard Spectrum.* A spectrum that has been prepared from a reference spectrum through a (documented) mathematical operation. A common example is de-resolving of reference spectra to lower-resolution standard spectra (Protocol, appendix K to the addendum of this method). Standard spectra, prepared by approved, and documented, procedures can be used as reference spectra for analysis.

3.4 *Concentration.* In this method concentration is expressed as a molar concentration, in ppm-meters, or in (ppm-meters)/K, where K is the absolute temperature (Kelvin). The latter units allow the direct comparison of concentrations from systems using different optical configurations or sampling temperatures.

3.5 *Interferant.* A compound in the sample matrix whose infrared spectrum overlaps with part of an analyte spectrum. The most accurate analyte measurements are achieved when reference spectra of interferants are used in the quantitative analysis with the analyte reference spectra. The presence of an interferant can increase the analytical uncertainty in the measured analyte concentration.

3.6 *Gas Cell.* A gas containment cell that can be evacuated. It is equipped with the optical components to pass the infrared beam through the sample to the detector. Important cell features include: path length (or range if variable), temperature range, materials of construction, and total gas volume.

3.7 *Sampling System.* Equipment used to extract the sample from the test location and transport the sample gas to the FTIR analyzer. This includes sample conditioning systems.

3.8 *Sample Analysis.* The process of interpreting the infrared spectra to obtain sample analyte concentrations. This process is usually automated using a software routine employing a classical least squares (cls), partial least squares (pls), or K- or P-matrix method.

3.9 *One hundred percent line.* A double beam transmittance spectrum obtained by combining two background single beam spectra. Ideally, this line is equal to 100 percent transmittance (or zero absorbance) at every frequency in the spectrum. Practically, a zero absorbance line is used to measure the baseline noise in the spectrum.

3.10 *Background Deviation.* A deviation from 100 percent transmittance in any region

of the 100 percent line. Deviations greater than ±5 percent in an analytical region are unacceptable (absorbance of 0.021 to −0.022). Such deviations indicate a change in the instrument throughput relative to the background single beam.

3.11 *Batch Sampling.* A procedure where spectra of discreet, static samples are collected. The gas cell is filled with sample and the cell is isolated. The spectrum is collected. Finally, the cell is evacuated to prepare for the next sample.

3.12 *Continuous Sampling.* A procedure where spectra are collected while sample gas is flowing through the cell at a measured rate.

3.13 *Sampling resolution.* The spectral resolution used to collect sample spectra.

3.14 *Truncation.* Limiting the number of interferogram data points by deleting points farthest from the center burst (zero path difference, ZPD).

3.15 *Zero filling.* The addition of points to the interferogram. The position of each added point is interpolated from neighboring real data points. Zero filling adds no information to the interferogram, but affects line shapes in the absorbance spectrum (and possibly analytical results).

3.16 *Reference CTS.* Calibration Transfer Standard spectra that were collected with reference spectra.

3.17 *CTS Standard.* CTS spectrum produced by applying a de-resolution procedure to a reference CTS.

3.18 *Test CTS.* CTS spectra collected at the sampling resolution using the same optical configuration as for sample spectra. Test spectra help verify the resolution, temperature and path length of the FTIR system.

3.19 *RMSD.* Root Mean Square Difference, defined in EPA FTIR Protocol, appendix A.

3.20 *Sensitivity.* The noise-limited compound-dependent detection limit for the FTIR system configuration. This is estimated by the MAU. It depends on the RMSD in an analytical region of a zero absorbance line.

3.21 *Quantitation Limit.* The lower limit of detection for the FTIR system configuration in the sample spectra. This is estimated by mathematically subtracting scaled reference spectra of analytes and interferences from sample spectra, then measuring the RMSD in an analytical region of the subtracted spectrum. Since the noise in subtracted sample spectra may be much greater than in a zero absorbance spectrum, the quantitation limit is generally much higher than the sensitivity. Removing spectral interferences from the sample or improving the spectral subtraction can lower the quantitation limit toward (but not below) the sensitivity.

3.22 *Independent Sample.* A unique volume of sample gas; there is no mixing of gas between two consecutive independent samples. In continuous sampling two independent samples are separated by at least 5 cell volumes. The interval between independent measurements depends on the cell volume and the sample flow rate (through the cell).

3.23 *Measurement.* A single spectrum of flue gas contained in the FTIR cell.

3.24 *Run.* A run consists of a series of measurements. At a minimum a run includes 8 independent measurements spaced over 1 hour.

3.25 *Validation.* Validation of FTIR measurements is described in sections 13.0 through 13.4 of this method. Validation is used to verify the test procedures for measuring specific analytes at a source. Validation provides proof that the method works under certain test conditions.

3.26 *Validation Run.* A validation run consists of at least 24 measurements of independent samples. Half of the samples are spiked and half are not spiked. The length of the run is determined by the interval between independent samples.

3.27 *Screening.* Screening is used when there is little or no available information about a source. The purpose of screening is to determine what analytes are emitted and to obtain information about important sample characteristics such as moisture, temperature, and interferences. Screening results are semi-quantitative (estimated concentrations) or qualitative (identification only). Various optical and sampling configurations may be used. Sample conditioning systems may be evaluated for their effectiveness in removing interferences. It is unnecessary to perform a complete run under any set of sampling conditions. Spiking is not necessary, but spiking can be a useful screening tool for evaluating the sampling system, especially if a reactive or soluble analyte is used for the spike.

3.28 *Emissions Test.* An FTIR emissions test is performed according specific sampling and analytical procedures. These procedures, for the target analytes and the source, are based on previous screening and validation results. Emission results are quantitative. A QA spike (sections 8.6.2 and 9.2 of this method) is performed under each set of sampling conditions using a representative analyte. Flow, gas temperature and diluent data are recorded concurrently with the FTIR measurements to provide mass emission rates for detected compounds.

3.29 *Surrogate.* A surrogate is a compound that is used in a QA spike procedure (section 8.6.2 of this method) to represent other compounds. The chemical and physical properties of a surrogate shall be similar to the compounds it is chosen to represent. Under given sampling conditions, usually a single sampling factor is of primary concern for measuring the target analytes: for example, the surrogate spike results can be representative for analytes that are more reactive, more soluble, have a lower absorptivity, or have a lower vapor pressure than the surrogate itself.

4.0 *Interferences*

Interferences are divided into two classifications: analytical and sampling.

4.1 *Analytical Interferences.* An analytical interference is a spectral feature that complicates (in extreme cases may prevent) the analysis of an analyte. Analytical interferences are classified as background or spectral interference.

4.1.1 *Background Interference.* This results from a change in throughput relative to the single beam background. It is corrected by collecting a new background and proceeding with the test. In severe instances the cause must be identified and corrected. Potential causes include: (1) Deposits on reflective surfaces or transmitting windows, (2) changes in detector sensitivity, (3) a change in the infrared source output, or (4) failure in the instrument electronics. In routine sampling throughput may degrade over several hours. Periodically a new background must be collected, but no other corrective action will be required.

4.1.2 *Spectral Interference.* This results from the presence of interfering compound(s) (interferant) in the sample. Interferant spectral features overlap analyte spectral features. Any compound with an infrared spectrum, including analytes, can potentially be an interferant. The Protocol measures absorbance band overlap in each analytical region to determine if potential interferants shall be classified as known interferants (FTIR Protocol, section 4.9 and appendix B). Water vapor and CO_2 are common spectral interferants. Both of these compounds have strong infrared spectra and are present in many sample matrices at high concentrations relative to analytes. The extent of interference depends on the (1) interferant concentration, (2) analyte concentration, and (3) the degree of band overlap. Choosing an alternate analytical region can minimize or avoid the spectral interference. For example, CO_2 interferes with the analysis of the 670 cm_{-1} benzene band. However, benzene can also be measured near 3000 cm^{-1} (with less sensitivity).

4.2 *Sampling System Interferences.* These prevent analytes from reaching the instrument. The analyte spike procedure is designed to measure sampling system interference, if any.

4.2.1 *Temperature.* A temperature that is too low causes condensation of analytes or water vapor. The materials of the sampling system and the FTIR gas cell usually set the upper limit of temperature.

4.2.2 *Reactive Species.* Anything that reacts with analytes. Some analytes, like formaldehyde, polymerize at lower temperatures.

4.2.3 *Materials.* Poor choice of material for probe, or sampling line may remove some analytes. For example, HF reacts with glass components.

4.2.4 *Moisture.* In addition to being a spectral interferant, condensed moisture removes soluble compounds.

5.0 *Safety*

The hazards of performing this method are those associated with any stack sampling method and the same precautions shall be followed. Many HAPs are suspected carcinogens or present other serious health risks. Exposure to these compounds should be avoided in all circumstances. For instructions on the safe handling of any particular compound, refer to its material safety data sheet. When using analyte standards, always ensure that gases are properly vented and that the gas handling system is leak free. (Always perform a leak check with the system under maximum vacuum and, again, with the system at greater than ambient pressure.) Refer to section 8.2 of this method for leak check procedures. This method does not address all of the potential safety risks associated with its use. Anyone performing this method must follow

safety and health practices consistent with applicable legal requirements and with prudent practice for each application.

6.0 *Equipment and Supplies*

Note: Mention of trade names or specific products does not constitute endorsement by the Environmental Protection Agency.

The equipment and supplies are based on the schematic of a sampling system shown in Figure 1. Either the batch or continuous sampling procedures may be used with this sampling system. Alternative sampling configurations may also be used, provided that the data quality objectives are met as determined in the post-analysis evaluation. Other equipment or supplies may be necessary, depending on the design of the sampling system or the specific target analytes.

6.1 *Sampling Probe.* Glass, stainless steel, or other appropriate material of sufficient length and physical integrity to sustain heating, prevent adsorption of analytes, and to transport analytes to the infrared gas cell. Special materials or configurations may be required in some applications. For instance, high stack sample temperatures may require special steel or cooling the probe. For very high moisture sources it may be desirable to use a dilution probe.

6.2 *Particulate Filters.* A glass wool plug (optional) inserted at the probe tip (for large particulate removal) and a filter (required) rated for 99 percent removal efficiency at 1-micron (e.g., Balston'') connected at the outlet of the heated probe.

6.3 *Sampling Line/Heating System.* Heated (sufficient to prevent condensation) stainless steel, polytetrafluoroethane, or other material inert to the analytes.

6.4 *Gas Distribution Manifold.* A heated manifold allowing the operator to control flows of gas standards and samples directly to the FTIR system or through sample conditioning systems. Usually includes heated flow meter, heated valve for selecting and sending sample to the analyzer, and a by-pass vent. This is typically constructed of stainless steel tubing and fittings, and high-temperature valves.

6.5 *Stainless Steel Tubing.* Type 316, appropriate diameter (e.g., 3/8 in.) and length for heated connections. Higher grade stainless may be desirable in some applications.

6.6 Calibration/Analyte Spike Assembly. A three way valve assembly (or equivalent) to introduce analyte or surrogate spikes into the sampling system at the outlet of the probe upstream of the out-of-stack particulate filter and the FTIR analytical system.

6.7 *Mass Flow Meter (MFM).* These are used for measuring analyte spike flow. The MFM shall be calibrated in the range of 0 to 5 L/min and be accurate to ± 2 percent (or better) of the flow meter span.

6.8 *Gas Regulators.* Appropriate for individual gas standards.

6.9 *Polytetrafluoroethane Tubing.* Diameter (e.g., ⅜ in.) and length suitable to connect cylinder regulators to gas standard manifold.

6.10 *Sample Pump.* A leak-free pump (e.g., KNF™), with by-pass valve, capable of producing a sample flow rate of at least 10 L/min through 100 ft of sample line. If the pump is positioned upstream of the distribution manifold and FTIR system, use a heated pump that is constructed from materials non-reactive to the analytes. If the pump is located downstream of the FTIR system, the gas cell sample pressure will be lower than ambient pressure and it must be recorded at regular intervals.

6.11 *Gas Sample Manifold.* Secondary manifold to control sample flow at the inlet to the FTIR manifold. This is optional, but includes a by-pass vent and heated rotameter.

6.12 *Rotameter.* A 0 to 20 L/min rotameter. This meter need not be calibrated.

6.13 *FTIR Analytical System.* Spectrometer and detector, capable of measuring the analytes to the chosen detection limit. The system shall include a personal computer with compatible software allowing automated collection of spectra.

6.14 *FTIR Cell Pump.* Required for the batch sampling technique, capable of evacuating the FTIR cell volume within 2 minutes. The pumping speed shall allow the operator to obtain 8 sample spectra in 1 hour.

6.15 *Absolute Pressure Gauge.* Capable of measuring pressure from 0 to 1000 mmHg to within ± 2.5 mmHg (e.g., Baratron™).

6.16 *Temperature Gauge.* Capable of measuring the cell temperature to within ± 2°C.

6.17 *Sample Conditioning.* One option is a condenser system, which is used for moisture removal. This can be helpful in the measurement of some analytes. Other sample conditioning procedures may be devised for the removal of moisture or other interfering species.

6.17.1 The analyte spike procedure of section 9.2 of this method, the QA spike procedure of section 8.6.2 of this method, and the validation procedure of section 13 of this method demonstrate whether the sample conditioning affects analyte concentrations. Alternatively, measurements can be made with two parallel FTIR systems; one measuring conditioned sample, the other measuring unconditioned sample.

6.17.2 Another option is sample dilution. The dilution factor measurement must be documented and accounted for in the reported concentrations. An alternative to dilution is to lower the sensitivity of the FTIR system by decreasing the cell path length, or to use a short-path cell in conjunction with a long path cell to measure more than one concentration range.

7.0 *Reagents and Standards*

7.1 *Analyte(s) and Tracer Gas.* Obtain a certified gas cylinder mixture containing all of the analyte(s) at concentrations within ± 2 percent of the emission source levels (expressed in ppm-meter/K). If practical, the analyte standard cylinder shall also contain the tracer gas at a concentration which gives a measurable absorbance at a dilution factor of at least 10:1. Two ppm SF_6 is sufficient for a path length of 22 meters at 250 °F.

7.2 *Calibration Transfer Standard(s).* Select the calibration transfer standards (CTS) according to section 4.5 of the FTIR Protocol. Obtain a National Institute of Standards and Technology (NIST) traceable gravimetric standard of the CTS (± 2 percent).

7.3 *Reference Spectra.* Obtain reference spectra for each analyte, interferant, surrogate, CTS, and tracer. If EPA reference spectra are not available, use reference spectra prepared according to procedures in section 4.6 of the EPA FTIR Protocol.

8.0 *Sampling and Analysis Procedure*

Three types of testing can be performed: (1) Screening, (2) emissions test, and (3) validation. Each is defined in section 3 of this method. Determine the purpose(s) of the FTIR test. Test requirements include: (a) AU_i, DL_i, overall fractional uncertainty, OFU_i, maximum expected concentration ($CMAX_i$), and t_{AN} for each, (b) potential interferants, (c) sampling system factors, e.g., minimum absolute cell pressure, (P_{min}), FTIR cell volume (V_{SS}), estimated sample absorption pathlength, L_S', estimated sample pressure, P_S', T_S', signal integration time (t_{SS}), minimum instrumental linewidth, MIL, fractional error, and (d) analytical regions, e.g., m = 1 to M, lower wavenumber position, FLm, center wavenumber position, FC_m, and upper wavenumber position, FU_m, plus interferants, upper wavenumber position of the CTS absorption band, FFU_m, lower wavenumber position of the CTS absorption band, FFL_m, wavenumber range FNU to FNL. If necessary, sample and acquire an initial spectrum. From analysis of this preliminary spectrum determine a suitable operational path length. Set up the sampling train as shown in Figure 1 or use an appropriate alternative configuration. Sections 8.1 through 8.11 of this method provide guidance on pre-test calculations in the EPA protocol, sampling and analytical procedures, and post-test protocol calculations.

8.1 *Pretest Preparations and Evaluations.* Using the procedure in section 4.0 of the FTIR Protocol, determine the optimum sampling system configuration for measuring the target analytes. Use available information to make reasonable assumptions about moisture content and other interferences.

8.1.1 *Analytes.* Select the required detection limit (DL_i) and the maximum permissible analytical uncertainty (AU_i) for each analyte (labeled from 1 to i). Estimate, if possible, the maximum expected concentration for each analyte, $CMAX_i$. The expected measurement range is fixed by DL_i and $CMAX_i$ for each analyte (i).

8.1.2 *Potential Interferants.* List the potential interferants. This usually includes water vapor and CO_2, but may also include some analytes and other compounds.

8.1.3. *Optical Configuration.* Choose an optical configuration that can measure all of the analytes within the absorbance range of .01 to 1.0 (this may require more than one path length). Use Protocol sections 4.3 to 4.8 for guidance in choosing a configuration and measuring CTS.

8.1.4 *Fractional Reproducibility Uncertainty (FRU_i).* The FRU is determined for each analyte by comparing CTS spectra taken before and after the reference spectra were measured. The EPA para-xylene reference spectra were collected on 10/31/91 and 11/01/91 with corresponding CTS spectra ''cts1031a,'' and

''cts1101b.'' The CTS spectra are used to estimate the reproducibility (FRU) in the system that was used to collect the references. The FRU must be < AU. Appendix E of the protocol is used to calculate the FRU from CTS spectra. Figure 2 plots results for 0.25 cm^{-1} CTS spectra in EPA reference library: S_3 (cts1101b − cts1031a), and S_4 [(cts1101b+cts1031a)/2]. The RMSD (SRMS) is calculated in the subtracted baseline, S_3, in the corresponding CTS region from 850 to 1065 cm^{-1}. The area (BAV) is calculated in the same region of the averaged CTS spectrum, S_4.

8.1.5 *Known Interferants.* Use appendix B of the EPA FTIR Protocol.

8.1.6 Calculate the Minimum Analyte Uncertainty, MAU (section 1.3 of this method discusses MAU and protocol appendix D gives the MAU procedure). The MAU for each analyte, i, and each analytical region, m, depends on the RMS noise.

8.1.7 *Analytical Program.* See FTIR Protocol, section 4.10. Prepare computer program based on the chosen analytical technique. Use as input reference spectra of all target analytes and expected interferants. Reference spectra of additional compounds shall also be included in the program if their presence (even if transient) in the samples is considered possible. The program output shall be in ppm (or ppb) and shall be corrected for differences between the reference path length, L_R, temperature, T_R, and pressure, P_R, and the conditions used for collecting the sample spectra. If sampling is performed at ambient pressure, then any pressure correction is usually small relative to corrections for path length and temperature, and may be neglected.

8.2 *Leak-Check*

8.2.1 *Sampling System.* A typical FTIR extractive sampling train is shown in Figure 1. Leak check from the probe tip to pump outlet as follows: Connect a 0-to 250-mL/min rate meter (rotameter or bubble meter) to the outlet of the pump. Close off the inlet to the probe, and record the leak rate. The leak rate shall be ≤200 mL/min.

8.2.2 *Analytical System Leak check.* Leak check the FTIR cell under vacuum and under pressure (greater than ambient). Leak check connecting tubing and inlet manifold under pressure.

8.2.2.1 For the evacuated sample technique, close the valve to the FTIR cell, and evacuate the absorption cell to the minimum absolute pressure P_{min}. Close the valve to the pump, and determine the change in pressure ΔP_v after 2 minutes.

8.2.2.2 For both the evacuated sample and purging techniques, pressurize the system to about 100 mmHg above atmospheric pressure. Isolate the pump and determine the change in pressure ΔP_p after 2 minutes.

8.2.2.3 Measure the barometric pressure, P_b in mmHg.

8.2.2.4 Determine the percent leak volume $\%V_L$ for the signal integration time t_{SS} and for ΔP_{max}, i.e., the larger of ΔP_v or ΔP_p, as follows:

$$\%V_L = 50 t_{SS} \frac{\Delta P_{max}}{P_{SS}} \qquad (2)$$

where 50 = 100% divided by the leak-check time of 2 minutes. 8.2.2.5 Leak volumes in excess of 4 percent of the FTIR system volume V_{SS} are unacceptable.

8.3 *Detector Linearity.* Once an optical configuration is chosen, use one of the procedures of sections 8.3.1 through 8.3.3 to verify that the detector response is linear. If the detector response is not linear, decrease the aperture, or attenuate the infrared beam. After a change in the instrument configuration perform a linearity check until it is demonstrated that the detector response is linear.

8.3.1 Vary the power incident on the detector by modifying the aperture setting. Measure the background and CTS at three instrument aperture settings: (1) at the aperture setting to be used in the testing, (2) at one half this aperture and (3) at twice the proposed testing aperture. Compare the three CTS spectra. CTS band areas shall agree to within the uncertainty of the cylinder standard and the RMSD noise in the system. If test aperture is the maximum aperture, collect CTS spectrum at maximum aperture, then close the aperture to reduce the IR throughput by half. Collect a second background and CTS at the smaller aperture setting and compare the spectra again.

8.3.2 Use neutral density filters to attenuate the infrared beam. Set up the FTIR system as it will be used in the test measurements. Collect a CTS spectrum. Use a neutral density filter to attenuate the infrared beam (either immediately after the source or the interferometer) to approximately ½ its original intensity. Collect a second CTS spectrum. Use another filter to attenuate the infrared beam to approximately ¼ its original intensity. Collect a third background and CTS spectrum. Compare the CTS spectra. CTS band areas shall agree to within the uncertainty of the cylinder standard and the RMSD noise in the system.

8.3.3 Observe the single beam instrument response in a frequency region where the detector response is known to be zero. Verify that the detector response is ''flat'' and equal to zero in these regions.

8.4 *Data Storage Requirements.* All field test spectra shall be stored on a computer disk and a second backup copy must stored on a separate disk. The stored information includes sample interferograms, processed absorbance spectra, background interferograms, CTS sample interferograms and CTS absorbance spectra. Additionally, documentation of all sample conditions, instrument settings, and test records must be recorded on hard copy or on computer medium. Table 1 gives a sample presentation of documentation.

8.5 *Background Spectrum.* Evacuate the gas cell to ≤5 mmHg, and fill with dry nitrogen gas to ambient pressure (or purge the cell with 10 volumes of dry nitrogen). Verify that no significant amounts of absorbing species (for example water vapor and CO_2) are present. Collect a background spectrum, using a signal averaging period equal to or greater than the averaging period for the sample spectra. Assign a unique file name to the background spectrum. Store two copies of the background interferogram and processed single-beam spectrum on separate computer disks (one copy is the back-up).

8.5.1 *Interference Spectra.* If possible, collect spectra of known and suspected major interferences using the same optical system that will be used in the field measurements. This can be done on-site or earlier. A number of gases, e.g. CO_2, SO_2, CO, NH_3, are readily available from cylinder gas suppliers.

8.5.2 Water vapor spectra can be prepared by the following procedure. Fill a sample tube with distilled water. Evacuate above the sample and remove dissolved gasses by alternately freezing and thawing the water while evacuating. Allow water vapor into the FTIR cell, then dilute to atmospheric pressure with nitrogen or dry air. If quantitative water spectra are required, follow the reference spectrum procedure for neat samples (protocol, section 4.6). Often, interference spectra need not be quantitative, but for best results the absorbance must be comparable to the interference absorbance in the sample spectra.

8.6 *Pre-Test Calibrations.*

8.6.1 *Calibration Transfer Standard.* Evacuate the gas cell to ≤ 5 mmHg absolute pressure, and fill the FTIR cell to atmospheric pressure with the CTS gas. Alternatively, purge the cell with 10 cell volumes of CTS gas. (If purge is used, verify that the CTS concentration in the cell is stable by collecting two spectra 2 minutes apart as the CTS gas continues to flow. If the absorbance in the second spectrum is no greater than in the first, within the uncertainty of the gas standard, then this can be used as the CTS spectrum.) Record the spectrum.

8.6.2 *QA Spike.* This procedure assumes that the method has been validated for at least some of the target analytes at the source. For emissions testing perform a QA spike. Use a certified standard, if possible, of an analyte, which has been validated at the source. One analyte standard can serve as a QA surrogate for other analytes which are less reactive or less soluble than the standard. Perform the spike procedure of section 9.2 of this method. Record spectra of at least three independent (section 3.22 of this method) spiked samples. Calculate the spiked component of the analyte concentration. If the average spiked concentration is within 0.7 to 1.3 times the expected concentration, then proceed with the testing. If applicable, apply the correction factor from the Method 301 of this appendix validation test (not the result from the QA spike).

8.7 *Sampling.* If analyte concentrations vary rapidly with time, continuous sampling is preferable using the smallest cell volume, fastest sampling rate and fastest spectra collection rate possible. Continuous sampling requires the least operator intervention even without an automated sampling system. For continuous monitoring at one location over long periods, Continuous sampling is preferred. Batch sampling and continuous static sampling are used for screening and performing test runs of finite duration. Either technique is preferred for sampling several

locations in a matter of days. Batch sampling gives reasonably good time resolution and ensures that each spectrum measures a discreet (and unique) sample volume. Continuous static (and continuous) sampling provide a very stable background over long periods. Like batch sampling, continuous static sampling also ensures that each spectrum measures a unique sample volume. It is essential that the leak check procedure under vacuum (section 8.2 of this method) is passed if the batch sampling procedure is used. It is essential that the leak check procedure under positive pressure is passed if the continuous static or continuous sampling procedures are used. The sampling techniques are described in sections 8.7.1 through 8.7.2 of this method.

8.7.1 *Batch Sampling.* Evacuate the absorbance cell to ≤5 mmHg absolute pressure. Fill the cell with exhaust gas to ambient pressure, isolate the cell, and record the spectrum. Before taking the next sample, evacuate the cell until no spectral evidence of sample absorption remains. Repeat this procedure to collect eight spectra of separate samples in 1 hour.

8.7.2 *Continuous Static Sampling.* Purge the FTIR cell with 10 cell volumes of sample gas. Isolate the cell, collect the spectrum of the static sample and record the pressure. Before measuring the next sample, purge the cell with 10 more cell volumes of sample gas.

8.8 *Sampling QA and Reporting*

8.8.1 Sample integration times shall be sufficient to achieve the required signal-to-noise ratio. Obtain an absorbance spectrum by filling the cell with N2. Measure the RMSD in each analytical region in this absorbance spectrum. Verify that the number of scans used is sufficient to achieve the target MAU.

8.8.2 Assign a unique file name to each spectrum.

8.8.3 Store two copies of sample interferograms and processed spectra on separate computer disks.

8.8.4 For each sample spectrum, document the sampling conditions, the sampling time (while the cell was being filled), the time the spectrum was recorded, the instrumental conditions (path length, temperature, pressure, resolution, signal integration time), and the spectral file name. Keep a hard copy of these data sheets.

8.9 *Signal Transmittance.* While sampling, monitor the signal transmittance. If signal transmittance (relative to the background) changes by 5 percent or more (absorbance = -.02 to .02) in any analytical spectral region, obtain a new background spectrum.

8.10 *Post-test CTS.* After the sampling run, record another CTS spectrum.

8.11 *Post-test QA*

8.11.1 Inspect the sample spectra immediately after the run to verify that the gas matrix composition was close to the expected (assumed) gas matrix.

8.11.2 Verify that the sampling and instrumental parameters were appropriate for the conditions encountered. For example, if the moisture is much greater than anticipated, it may be necessary to use a shorter path length or dilute the sample.

8.11.3 Compare the pre- and post-test CTS spectra. The peak absorbance in pre- and post-test CTS must be ±5 περψεντ οφ τηε μεαν ωαλθε. Σεε αππενδιχ Ε οφ τηε ΦΤΙΡ Προτοψολ.

9.0 *Quality Control.*

Use analyte spiking (sections 8.6.2, 9.2 and 13.0 of this method) to verify that the sampling system can transport the analytes from the probe to the FTIR system.

9.1 *Spike Materials.* Use a certified standard (accurate to ±2 percent) of the target analyte, if one can be obtained. If a certified standard cannot be obtained, follow the procedures in section 4.6.2.2 of the FTIR Protocol.

9.2 *Spiking Procedure.* QA spiking (section 8.6.2 of this method) is a calibration procedure used before testing. QA spiking involves following the spike procedure of sections 9.2.1 through 9.2.3 of this method to obtain at least three spiked samples. The analyte concentrations in the spiked samples shall be compared to the expected spike concentration to verify that the sampling/analytical system is working properly. Usually, when QA spiking is used, the method has already been validated at a similar source for the analyte in question. The QA spike demonstrates that the validated sampling/analytical conditions are being duplicated. If the QA spike fails then the sampling/analytical system shall be repaired before testing proceeds. The method validation procedure (section 13.0 of this method) involves a more extensive use of the analyte spike procedure of sections 9.2.1 through 9.2.3 of this method. Spectra of at least 12 independent spiked and 12 independent unspiked samples are recorded. The concentration results are analyzed statistically to determine if there is a systematic bias in the method for measuring a particular analyte. If there is a systematic bias, within the limits allowed by Method 301 of this appendix, then a correction factor shall be applied to the analytical results. If the systematic bias is greater than the allowed limits, this method is not valid and cannot be used.

9.2.1 Introduce the spike/tracer gas at a constant flow rate of ≤10 percent of the total sample flow, when possible.

Note: Use the rotameter at the end of the sampling train to estimate the required spike/tracer gas flow rate.

Use a flow device, e.g., mass flow meter (± 2 percent), to monitor the spike flow rate. Record the spike flow rate every 10 minutes.

9.2.2 Determine the response time (RT) of the system by continuously collecting spectra of the spiked effluent until the spectrum of the spiked component is constant for 5 minutes. The RT is the interval from the first measurement until the spike becomes constant. Wait for twice the duration of the RT, then collect spectra of two independent spiked gas samples. Duplicate analyses of the spiked concentration shall be within 5 percent of the mean of the two measurements.

9.2.3 Calculate the dilution ratio using the tracer gas as follows: where:

$$DF = \frac{SF_{6(spk)}}{SF_{6(dir)}} \qquad (3)$$

Where:

$$CS = DF*Spike_{dir} + Unspike\ (1 - DF) \qquad (4)$$

DF=Dilution factor of the spike gas; this value shall be ≥10.

$SF_{6(dir)}$=SF_6 (or tracer gas) concentration measured directly in undiluted spike gas.

$SF_{6(spk)}$=Diluted SF_6 (or tracer gas) concentration measured in a spiked sample.

$Spike^{dir}$=Concentration of the analyte in the spike standard measured by filling the FTIR cell directly.

CS=Expected concentration of the spiked samples.

Unspike=Native concentration of analytes in unspiked samples.

10.0 Calibration and Standardization

10.1 *Signal-to-Noise Ratio (S/N).* The RMSD in the noise must be less than one tenth of the minimum analyte peak absorbance in each analytical region. For example if the minimum peak absorbance is 0.01 at the required DL, then RMSD measured over the entire analytical region must be ≤0.001.

10.2 *Absorbance Path length.* Verify the absorbance path length by comparing reference CTS spectra to test CTS spectra. See appendix E of the FTIR Protocol.

10.3 *Instrument Resolution.* Measure the line width of appropriate test CTS band(s) to verify instrument resolution. Alternatively, compare CTS spectra to a reference CTS spectrum, if available, measured at the nominal resolution.

10.4 *Apodization Function.*In transforming the sample interferograms to absorbance spectra use the same apodization function that was used in transforming the reference spectra.

10.5 *FTIR Cell Volume.* Evacuate the cell to ≤5 mmHg. Measure the initial absolute temperature (T_i) and absolute pressure (P_i). Connect a wet test meter (or a calibrated dry gas meter), and slowly draw room air into the cell. Measure the meter volume (V_m), meter absolute temperature (T_m), and meter absolute pressure (P_m); and the cell final absolute temperature (T_f) and absolute pressure (P_f). Calculate the FTIR cell volume VSS, including that of the connecting tubing, as follows:

$$V_{SS} = \frac{V_m \frac{P_m}{T_m}}{\left[\frac{P_f}{T_f} - \frac{P_i}{T_i}\right]} \qquad (5)$$

11.0 Data Analysis and Calculations

Analyte concentrations shall be measured using reference spectra from the EPA FTIR spectral library. When EPA library spectra are not available, the procedures in section 4.6 of the Protocol shall be followed to prepare reference spectra of all the target analytes.

11.1 *Spectral De-resolution.* Reference spectra can be converted to lower resolution standard spectra (section 3.3 of this method) by truncating the original reference sample and background interferograms. Appendix K of the FTIR Protocol gives specific deresolution procedures. Deresolved spectra shall be transformed using the same apodization function and level of zero filling as the sample spectra. Additionally, pre-test FTIR protocol calculations (e.g., FRU, MAU, FCU) shall be performed using the de-resolved standard spectra.

11.2 *Data Analysis.* Various analytical programs are available for relating sample absorbance to a concentration standard. Calculated concentrations shall be verified by analyzing residual baselines after mathematically subtracting scaled reference spectra from the sample spectra. A full description of the data analysis and calculations is contained in the FTIR Protocol (sections 4.0, 5.0, 6.0 and appendices). Correct the calculated concentrations in the sample spectra for differences in absorption path length and temperature between the reference and sample spectra using equation 6,

$$C_{corr} = \left(\frac{L_r}{L_s}\right)\left(\frac{T_s}{T_r}\right)\left(\frac{P_r}{P_s}\right)C_{calc} \qquad (6)$$

Where:

C_{corr}=Concentration, corrected for path length.

C_{calc}=Concentration, initial calculation (output of the analytical program designed for the compound).

L_r=Reference spectra path length.

L_s=Sample spectra path length.

T_s=Absolute temperature of the sample gas, K.

T_r=Absolute gas temperature of reference spectra, K.

P_s=Sample cell pressure.

P_r=Reference spectrum sample pressure.

12.0 *Method Performance*

12.1 *Spectral Quality.* Refer to the FTIR Protocol appendices for analytical requirements, evaluation of data quality, and analysis of uncertainty.

12.2 *Sampling QA/QC.* The analyte spike procedure of section 9 of this method, the QA spike of section 8.6.2 of this method, and the validation procedure of section 13 of this method are used to evaluate the performance of the sampling system and to quantify sampling system effects, if any, on the measured concentrations. This method is self-validating provided that the results meet the performance requirement of the QA spike in sections 9.0 and 8.6.2 of this method and results from a previous method validation study support the use of this method in the application. Several factors can contribute to uncertainty in the measurement of spiked samples. Factors which can be controlled to provide better accuracy in the spiking procedure are listed in sections 12.2.1 through 12.2.4 of this method.

12.2.1 *Flow meter.* An accurate mass flow meter is accurate to ±1 percent of its span. If a flow of 1 L/min is monitored with such a MFM, which is calibrated in the range of 0–5 L/min, the flow measurement has an uncertainty of 5 percent. This may be improved by re-calibrating the meter at the specific flow rate to be used.

12.2.2 *Calibration gas.* Usually the calibration standard is certified to within ± 2 percent. With reactive analytes, such as HCl, the certified accuracy in a commercially available standard may be no better than ± 5 percent.

12.2.3 *Temperature.* Temperature measurements of the cell shall be quite accurate. If practical, it is preferable to measure sample temperature directly, by inserting a thermocouple into the cell chamber instead of monitoring the cell outer wall temperature.

12.2.4 *Pressure.* Accuracy depends on the accuracy of the barometer, but fluctuations in pressure throughout a day may be as much as 2.5 percent due to weather variations.

13.0 *Method Validation Procedure*

This validation procedure, which is based on EPA Method 301 (40 CFR part 63, appendix (A), may be used to validate this method for the analytes in a gas matrix. Validation at one source may also apply to another type of source, if it can be shown that the exhaust gas characteristics are similar at both sources.

13.1 Section 5.3 of Method 301 (40 CFR part 63, appendix A), the Analyte Spike procedure, is used with these modifications. The statistical analysis of the results follows section 6.3 of EPA Method 301. Section 3 of this method defines terms that are not defined in Method 301.

13.1.1 The analyte spike is performed dynamically. This means the spike flow is continuous and constant as spiked samples are measured.

13.1.2 The spike gas is introduced at the back of the sample probe.

13.1.3 Spiked effluent is carried through all sampling components downstream of the probe.

13.1.4 A single FTIR system (or more) may be used to collect and analyze spectra (not quadruplicate integrated sampling trains).

13.1.5 All of the validation measurements are performed sequentially in a single ''run'' (section 3.26 of this method).

13.1.6 The measurements analyzed statistically are each independent (section 3.22 of this method).

13.1.7 A validation data set can consist of more than 12 spiked and 12 unspiked measurements.

13.2 *Batch Sampling.* The procedure in sections 13.2.1 through 13.2.2 may be used for stable processes. If process emissions are highly variable, the procedure in section 13.2.3 shall be used.

13.2.1 With a single FTIR instrument and sampling system, begin by collecting spectra of two unspiked samples. Introduce the spike flow into the sampling system and allow 10 cell volumes to purge the sampling system and FTIR cell. Collect spectra of two spiked samples. Turn off the spike and allow 10 cell volumes of unspiked sample to purge the FTIR cell. Repeat this procedure until the 24 (or more) samples are collected.

13.2.2 In batch sampling, collect spectra of 24 distinct samples. (Each distinct sample consists of filling the cell to ambient pressure after the cell has been evacuated.)

13.2.3 Alternatively, a separate probe assembly, line, and sample pump can be used for spiked sample. Verify and document that sampling conditions are the same in both the spiked and the unspiked sampling systems. This can be done by wrapping both sample lines in the same heated bundle. Keep the same flow rate in both sample lines. Measure samples in sequence in pairs. After two spiked samples are measured, evacuate the FTIR cell, and turn the manifold valve so that spiked sample flows to the FTIR cell. Allow the connecting line from the manifold to the FTIR cell to purge thoroughly (the time depends on the line length and flow rate). Collect a pair of spiked samples. Repeat the procedure until at least 24 measurements are completed.

13.3 Simultaneous Measurements With Two FTIR Systems. If unspiked effluent concentrations of the target analyte(s) vary significantly with time, it may be desirable to perform synchronized measurements of spiked and unspiked sample. Use two FTIR systems, each with its own cell and sampling system to perform simultaneous spiked and unspiked measurements. The optical configurations shall be similar, if possible. The sampling configurations shall be the same. One sampling system and FTIR analyzer shall be used to measure spiked effluent. The other sampling system and FTIR analyzer shall be used to measure unspiked flue gas. Both systems shall use the same sampling procedure (i.e., batch or continuous).

13.3.1 If batch sampling is used, synchronize the cell evacuation, cell filling, and collection of spectra. Fill both cells at the same rate (in cell volumes per unit time).

13.3.2 If continuous sampling is used, adjust the sample flow through each gas cell so that the same number of cell volumes pass through each cell in a given time (i.e. $TC_1 = TC_2$).

13.4 *Statistical Treatment.* The statistical procedure of EPA Method 301 of this appendix, section 6.3 is used to evaluate the bias and precision. For FTIR testing a validation ''run'' is defined as spectra of 24 independent samples, 12 of which are spiked with the analyte(s) and 12 of which are not spiked.

13.4.1 *Bias.* Determine the bias (defined by EPA Method 301 of this appendix, section 6.3.2) using equation 7:

$$B = S_m - CS \qquad (7)$$

Where:

B = Bias at spike level.

S_m = Mean concentration of the analyte spiked samples.

CS = Expected concentration of the spiked samples.

13.4.2 *Correction Factor.* Use section 6.3.2.2 of Method 301 of this appendix to evaluate the statistical significance of the bias. If it is determined that the bias is significant, then use section 6.3.3 of Method 301 to calculate a correction factor (CF). Analytical results of the test method are multiplied by the correction factor, if $0.7 \leq CF \leq 1.3$. If is determined that the bias is significant and $CF > \pm 30$ percent, then the test method is considered to ''not valid.''

13.4.3 If measurements do not pass validation, evaluate the sampling system, instrument configuration, and analytical system to determine if improper set-up or a malfunction was the cause. If so, repair the system and repeat the validation.

14.0 *Pollution Prevention.*

The extracted sample gas is vented outside the enclosure containing the FTIR system and gas manifold after the analysis. In typical method applications the vented sample volume is a small fraction of the source volumetric flow and its composition is identical to that emitted from the source. When analyte spiking is used, spiked pollutants are vented with the extracted sample gas. Approximately 1.6×10^{-4} to 3.2×10^{-4} lbs of a single HAP may be vented to the atmosphere in a typical validation run of 3 hours. (This assumes a molar mass of 50 to 100 g, spike rate of 1.0 L/min, and a standard concentration of 100 ppm). Minimize emissions by keeping the spike flow off when not in use.

15.0 *Waste Management.*

Small volumes of laboratory gas standards can be vented through a laboratory hood. Neat samples must be packed and disposed according to applicable regulations. Surplus materials may be returned to supplier for disposal.

16.0 *References.*

1. ''Field Validation Test Using Fourier Transform Infrared (FTIR) Spectrometry To Measure Formaldehyde, Phenol and Methanol at a Wool Fiberglass Production Facility.'' Draft. U.S. Environmental Protection Agency Report, EPA Contract No. 68D20163, Work Assignment I–32, September 1994.

2. ''FTIR Method Validation at a Coal-Fired Boiler''. Prepared for U.S. Environmental Protection Agency, Research Triangle Park, NC. Publication No.: EPA–454/R95–004, NTIS No.: PB95–193199. July, 1993.

3. ''Method 301—Field Validation of Pollutant Measurement Methods from Various Waste Media,'' 40 CFR part 63, appendix A.

4. ''Molecular Vibrations; The Theory of Infrared and Raman Vibrational Spectra,'' E. Bright Wilson, J. C. Decius, and P. C. Cross, Dover Publications, Inc., 1980. For a less intensive treatment of molecular rotational-vibrational spectra see, for example, ''Physical Chemistry,'' G. M. Barrow, chapters 12, 13, and 14, McGraw Hill, Inc., 1979.

5. ''Fourier Transform Infrared Spectrometry,'' Peter R. Griffiths and James de Haseth, Chemical Analysis, 83, 16–25,(1986), P. J. Elving, J. D. Winefordner and I. M. Kolthoff (ed.), John Wiley and Sons.

6. ''Computer-Assisted Quantitative Infrared Spectroscopy,'' Gregory L. McClure (ed.), ASTM Special Publication 934 (ASTM), 1987.

7. ''Multivariate Least-Squares Methods Applied to the Quantitative Spectral Analysis of Multicomponent Mixtures,'' Applied Spectroscopy, 39(10), 73–84, 1985.

TABLE 1.—EXAMPLE PRESENTATION OF SAMPLING DOCUMENTATION.

Sample time	Spectrum file name	Background file name	Sample conditioning	Process condition

Sample time	Spectrum file	Interferogram	Resolution	Scans	Apodization	Gain	CTS Spectrum

BILLING CODE 6560–50–P

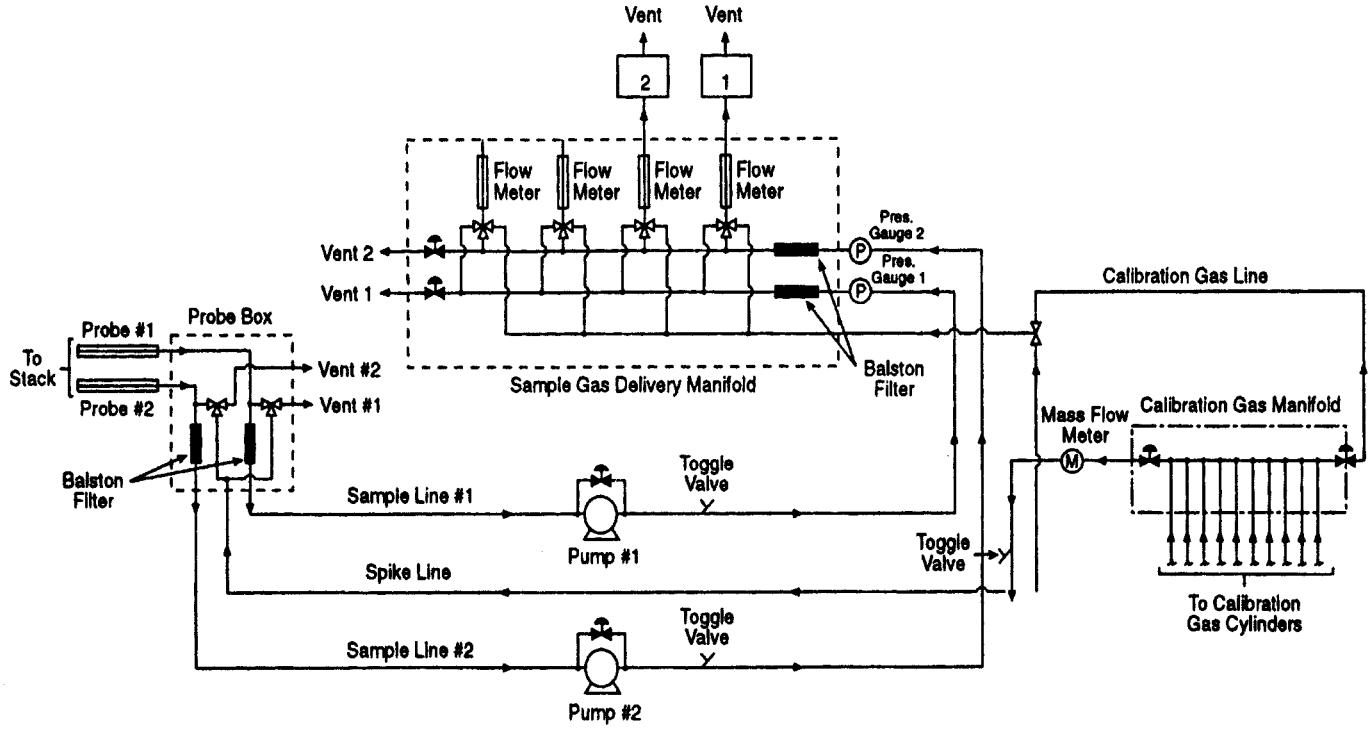

Figure 1. Extractive FTIR sampling system.

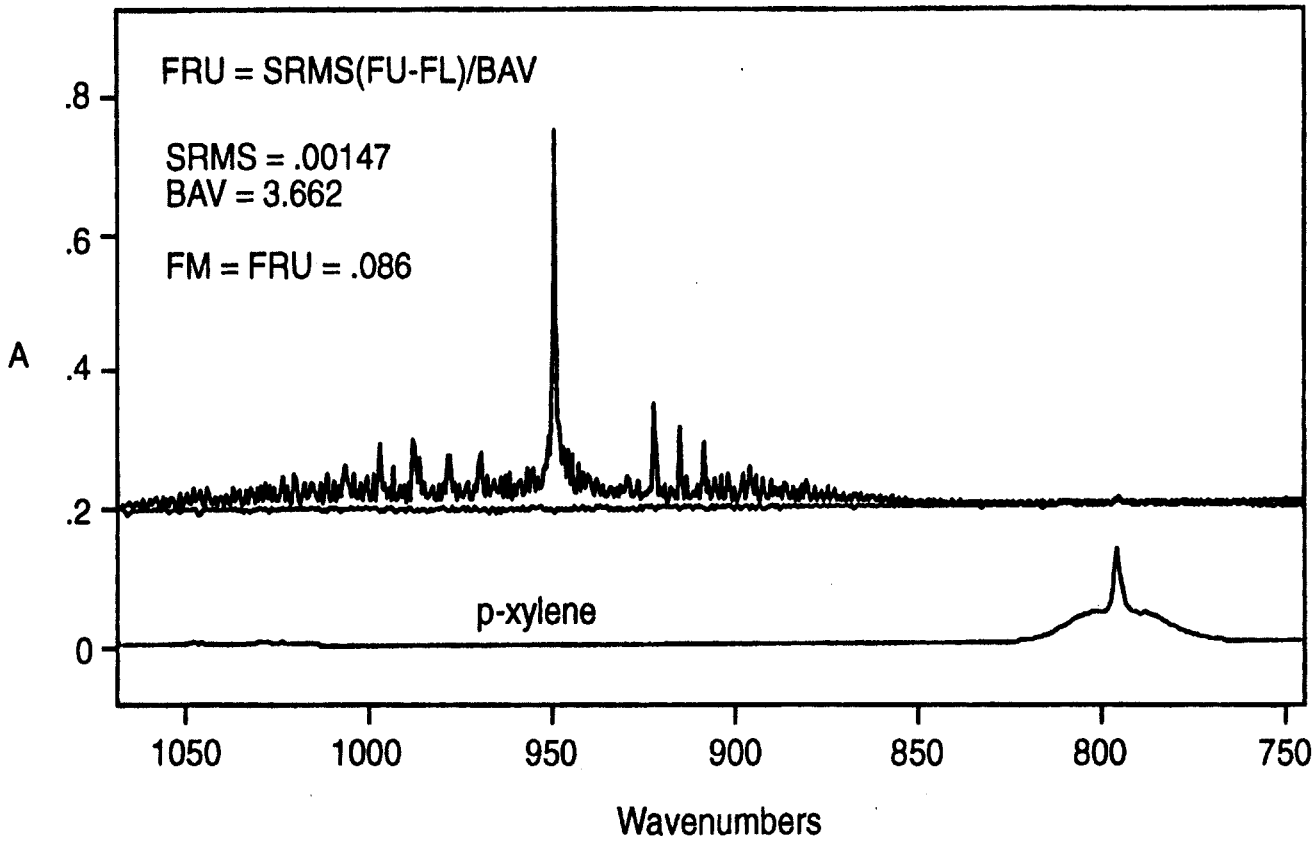

Figure 2. Fractional Reproducibility. Top: average of cts1031a and cts1101b. Bottom: Reference spectrum of p-xylene.

BILLING CODE 6560–50–O

Addendum to Test Method 320—Protocol for the Use of Extractive Fourier Transform Infrared (FTIR) Spectrometry for the Analyses of Gaseous Emissions from Stationary Sources

1.0 *Introduction*

The purpose of this addendum is to set general guidelines for the use of modern FTIR spectroscopic methods for the analysis of gas samples extracted from the effluent of stationary emission sources. This addendum outlines techniques for developing and evaluating such methods and sets basic requirements for reporting and quality assurance procedures.

1.1 *Nomenclature*

1.1.1 Appendix A to this addendum lists definitions of the symbols and terms used in this Protocol, many of which have been taken directly from American Society for Testing and Materials (ASTM) publication E 131–90a, entitled ''Terminology Relating to Molecular Spectroscopy.''

1.1.2 Except in the case of background spectra or where otherwise noted, the term ''spectrum'' refers to a double-beam spectrum in units of absorbance vs. wavenumber (cm^{-1}).

1.1.3 The term ''Study'' in this addendum refers to a publication that has been subjected to EPA- or peer-review.

2.0 *Applicability and Analytical Principle*

2.1 *Applicability.* This Protocol applies to the determination of compound-specific concentrations in single- and multiple-component gas phase samples using double-beam absorption spectroscopy in the mid-infrared band. It does not specifically address other FTIR applications, such as single-beam spectroscopy, analysis of open-path (non-enclosed) samples, and continuous measurement techniques. If multiple spectrometers, absorption cells, or instrumental linewidths are used in such analyses, each distinct operational configuration of the system must be evaluated separately according to this Protocol.

2.2 *Analytical Principle*

2.2.1 In the mid-infrared band, most molecules exhibit characteristic gas phase absorption spectra that may be recorded by FTIR systems. Such systems consist of a source of mid-infrared radiation, an interferometer, an enclosed sample cell of known absorption pathlength, an infrared detector, optical elements for the transfer of infrared radiation between components, and gas flow control and measurement components. Adjunct and integral computer systems are used for controlling the instrument, processing the signal, and for performing both Fourier transforms and quantitative analyses of spectral data.

2.2.2 The absorption spectra of pure gases and of mixtures of gases are described by a linear absorbance theory referred to as Beer's Law. Using this law, modern FTIR systems use computerized analytical programs to quantify compounds by comparing the absorption spectra of known (reference) gas samples to the absorption spectrum of the sample gas. Some standard mathematical techniques used for comparisons are classical least squares, inverse least squares, cross-correlation, factor analysis, and partial least squares. Reference A describes several of these techniques, as well as additional techniques, such as differentiation methods, linear baseline corrections, and non-linear absorbance corrections.

3.0 *General Principles of Protocol Requirements*

The characteristics that distinguish FTIR systems from gas analyzers used in instrumental gas analysis methods (e.g., Methods 6C and 7E of appendix A to part 60 of this chapter) are: (1) Computers are necessary to obtain and analyze data; (2) chemical concentrations can be quantified using previously recorded infrared reference

spectra; and (3) analytical assumptions and results, including possible effects of interfering compounds, can be evaluated after the quantitative analysis. The following general principles and requirements of this Protocol are based on these characteristics.

3.1 *Verifiability and Reproducibility of Results.* Store all data and document data analysis techniques sufficient to allow an independent agent to reproduce the analytical results from the raw interferometric data.

3.2 *Transfer of Reference Spectra.* To determine whether reference spectra recorded under one set of conditions (e.g., optical bench, instrumental linewidth, absorption pathlength, detector performance, pressure, and temperature) can be used to analyze sample spectra taken under a different set of conditions, quantitatively compare ''calibration transfer standards'' (CTS) and reference spectra as described in this Protocol. (**Note:** The CTS may, but need not, include analytes of interest). To effect this, record the absorption spectra of the CTS (a) immediately before and immediately after recording reference spectra and (b) immediately after recording sample spectra.

3.3 *Evaluation of FTIR Analyses.* The applicability, accuracy, and precision of FTIR measurements are influenced by a number of interrelated factors, which may be divided into two classes:

3.3.1 *Sample-Independent Factors.* Examples are system configuration and performance (e.g., detector sensitivity and infrared source output), quality and applicability of reference absorption spectra, and type of mathematical analyses of the spectra. These factors define the fundamental limitations of FTIR measurements for a given system configuration. These limitations may be estimated from evaluations of the system before samples are available. For example, the detection limit for the absorbing compound under a given set of conditions may be estimated from the system noise level and the strength of a particular absorption band. Similarly, the accuracy of measurements may be estimated from the analysis of the reference spectra.

3.3.2 *Sample-Dependent Factors.* Examples are spectral interferants (e.g., water vapor and CO_2) or the overlap of spectral features of different compounds and contamination deposits on reflective surfaces or transmitting windows. To maximize the effectiveness of the mathematical techniques used in spectral analysis, identification of interferants (a standard initial step) and analysis of samples (includes effect of other analytical errors) are necessary. Thus, the Protocol requires post-analysis calculation of measurement concentration uncertainties for the detection of these potential sources of measurement error.

4.0 *Pre-Test Preparations and Evaluations*

Before testing, demonstrate the suitability of FTIR spectrometry for the desired application according to the procedures of this section.

4.1 *Identify Test Requirements.* Identify and record the test requirements described in sections 4.1.1 through 4.1.4 of this addendum. These values set the desired or required goals of the proposed analysis; the description of methods for determining whether these goals are actually met during the analysis comprises the majority of this Protocol.

4.1.1 Analytes (specific chemical species) of interest. Label the analytes from i = 1 to I.

4.1.2 Analytical uncertainty limit (AU_i). The AU_i is the maximum permissible fractional uncertainty of analysis for the ith analyte concentration, expressed as a fraction of the analyte concentration in the sample.

4.1.3 Required detection limit for each analyte (DL_i, ppm). The detection limit is the lowest concentration of an analyte for which its overall fractional uncertainty (OFU_i) is required to be less than its analytical uncertainty limit (AU_i).

4.1.4 Maximum expected concentration of each analyte ($CMAX_i$, ppm).

4.2 *Identify Potential Interferants.* Considering the chemistry of the process or results of previous studies, identify potential interferants, i.e., the major effluent constituents and any relatively minor effluent constituents that possess either strong absorption characteristics or strong structural similarities to any analyte of interest. Label them 1 through N_j, where the subscript ''j'' pertains to potential interferants. Estimate the concentrations of these compounds in the effluent ($CPOT_j$, ppm).

4.3 *Select and Evaluate the Sampling System.* Considering the source, e.g., temperature and pressure profiles, moisture content, analyte characteristics, and particulate concentration), select the equipment for extracting gas samples. Recommended are a particulate filter, heating system to maintain sample temperature above the dew point for all sample constituents at all points within the sampling system (including the filter), and sample conditioning system (e.g., coolers, water-permeable membranes that remove water or other compounds from the sample, and dilution devices) to remove spectral interferants or to protect the sampling and analytical components. Determine the minimum absolute sample system pressure (P_{min}, mmHg) and the infrared absorption cell volume (V_{SS}, liter). Select the techniques and/or equipment for the measurement of sample pressures and temperatures.

4.4 *Select Spectroscopic System.* Select a spectroscopic configuration for the application. Approximate the absorption pathlength (L_S', meter), sample pressure (P_S', kPa), absolute sample temperature T_S', and signal integration period (t_{SS}, seconds) for the analysis. Specify the nominal minimum instrumental linewidth (MIL) of the system. Verify that the fractional error at the approximate values P_S' and T_S' is less than one half the smallest value AU_i (see section 4.1.2 of this addendum).

4.5 Select Calibration Transfer Standards (CTS's). Select CTS's that meet the criteria listed in sections 4.5.1, 4.5.2, and 4.5.3 of this addendum.

Note: It may be necessary to choose preliminary analytical regions (see section 4.7 of this addendum), identify the minimum analyte linewidths, or estimate the system noise level (see section 4.12 of this addendum) before selecting the CTS. More than one compound may be needed to meet the criteria; if so, obtain separate cylinders for each compound.

4.5.1 The central wavenumber position of each analytical region shall lie within 25 percent of the wavenumber position of at least one CTS absorption band.

4.5.2 The absorption bands in section 4.5.1 of this addendum shall exhibit peak absorbances greater than ten times the value RMS_{EST} (see section 4.12 of this addendum) but less than 1.5 absorbance units.

4.5.3 At least one absorption CTS band within the operating range of the FTIR instrument shall have an instrument-independent linewidth no greater than the narrowest analyte absorption band. Perform and document measurements or cite Studies to determine analyte and CTS compound linewidths.

4.5.4 For each analytical region, specify the upper and lower wavenumber positions (FFU_m and FFL_m, respectively) that bracket the CTS absorption band or bands for the associated analytical region. Specify the wavenumber range, FNU to FNL, containing the absorption band that meets the criterion of section 4.5.3 of this addendum.

4.5.5 Associate, whenever possible, a single set of CTS gas cylinders with a set of reference spectra. Replacement CTS gas cylinders shall contain the same compounds at concentrations within 5 percent of that of the original CTS cylinders; the entire absorption spectra (not individual spectral segments) of the replacement gas shall be scaled by a factor between 0.95 and 1.05 to match the original CTS spectra.

4.6 *Prepare Reference Spectra*

Note: Reference spectra are available in a permanent soft copy from the EPA spectral library on the EMTIC (Emission Measurement Technical Information Center) computer bulletin board; they may be used if applicable.

4.6.1 Select the reference absorption pathlength (L_R) of the cell.

4.6.2 Obtain or prepare a set of chemical standards for each analyte, potential and known spectral interferants, and CTS. Select the concentrations of the chemical standards to correspond to the top of the desired range.

4.6.2.1 *Commercially-Prepared Chemical Standards.* Chemical standards for many compounds may be obtained from independent sources, such as a specialty gas manufacturer, chemical company, or commercial laboratory. These standards (accurate to within ±2 percent) shall be prepared according to EPA Traceability Protocol (see Reference D) or shall be traceable to NIST standards. Obtain from the supplier an estimate of the stability of the analyte concentration. Obtain and follow all of the supplier's recommendations for recertifying the analyte concentration.

4.6.2.2 *Self-Prepared Chemical Standards.* Chemical standards may be prepared by diluting certified commercially prepared chemical gases or pure analytes with ultra-pure carrier (UPC) grade nitrogen according to the barometric and volumetric techniques generally described in Reference A, section A4.6.

4.6.3 Record a set of the absorption spectra of the CTS {R1}, then a set of the reference spectra at two or more concentrations in duplicate over the desired range (the top of the range must be less than 10 times that of the bottom), followed by a second set of CTS spectra {R2}. (If self-prepared standards are used, see section 4.6.5 of this addendum before disposing of any of the standards.) The maximum accepted standard concentration-pathlength product (ASCPP) for each compound shall be higher than the maximum estimated concentration-pathlength products for both analytes and known interferants in the effluent gas. For each analyte, the minimum ASCPP shall be no greater than ten times the concentration-pathlength product of that analyte at its required detection limit.

4.6.4 Permanently store the background and interferograms in digitized form. Document details of the mathematical process for generating the spectra from these interferograms. Record the sample pressure (P_R), sample temperature (T_R), reference absorption pathlength (L_R), and interferogram signal integration period (t_{SR}). Signal integration periods for the background interferograms shall be $\geq t_{SR}$. Values of P_R, L_R, and t_{SR} shall not deviate by more than ±1 percent from the time of recording {R1} to that of recording {R2}.

4.6.5 If self-prepared chemical standards are employed and spectra of only two concentrations are recorded for one or more compounds, verify the accuracy of the dilution technique by analyzing the prepared standards for those compounds with a secondary (non-FTIR) technique in accordance with sections 4.6.5.1 through 4.6.5.4 of this addendum.

4.6.5.1 Record the response of the secondary technique to each of the four standards prepared.

4.6.5.2 Perform a linear regression of the response values (dependant variable) versus the accepted standard concentration (ASC) values (independent variable), with the regression constrained to pass through the zero-response, zero ASC point.

4.6.5.3 Calculate the average fractional difference between the actual response values and the regression-predicted values (those calculated from the regression line using the four ASC values as the independent variable).

4.6.5.4 If the average fractional difference value calculated in section 4.6.5.3 of this addendum is larger for any compound than the corresponding AU_i, the dilution technique is not sufficiently accurate and the reference spectra prepared are not valid for the analysis.

4.7 *Select Analytical Regions.* Using the general considerations in section 7 of Reference A and the spectral characteristics of the analytes and interferants, select the analytical regions for the application. Label them m = 1 to M. Specify the lower, center and upper wavenumber positions of each analytical region (FL_m, FC_m, and FU_m, respectively). Specify the analytes and interferants which exhibit absorption in each region.

4.8 *Determine Fractional Reproducibility Uncertainties.* Using appendix E of this addendum, calculate the fractional reproducibility uncertainty for each analyte (FRU_i) from a comparison of {R1} and {R2}. If $FRU_i > AU_i$ for any analyte, the reference spectra generated in accordance with section 4.6 of this addendum are not valid for the application.

4.9 *Identify Known Interferants.* Using appendix B of this addendum, determine which potential interferants affect the analyte concentration determinations. Relabel these potential interferant as ''known'' interferants, and designate these compounds from k = 1 to K. Appendix B to this addendum also provides criteria for determining whether the selected analytical regions are suitable.

4.10 *Prepare Computerized Analytical Programs*

4.10.1 Choose or devise mathematical techniques (e.g, classical least squares, inverse least squares, cross-correlation, and factor analysis) based on equation 4 of Reference A that are appropriate for analyzing spectral data by comparison with reference spectra.

4.10.2 Following the general recommendations of Reference A, prepare a computer program or set of programs that analyzes all of the analytes and known interferants, based on the selected analytical regions (section 4.7 of this addendum) and the prepared reference spectra (section 4.6 of this addendum). Specify the baseline correction technique (e.g., determining the slope and intercept of a linear baseline contribution in each analytical region) for each analytical region, including all relevant wavenumber positions.

4.10.3 Use programs that provide as output [at the reference absorption pathlength (L_R), reference gas temperature (T_R), and reference gas pressure (P_R)] the analyte concentrations, the known interferant concentrations, and the baseline slope and intercept values. If the sample absorption pathlength (L_S), sample gas temperature (T_S), or sample gas pressure (P_S) during the actual sample analyses differ from L_R, T_R, and P_R, use a program or set of programs that applies multiplicative corrections to the derived concentrations to account for these variations, and that provides as output both the corrected and uncorrected values. Include in the report of the analysis (see section 7.0 of this addendum) the details of any transformations applied to the original reference spectra (e.g., differentiation), in such a fashion that all analytical results may be verified by an independent agent from the reference spectra and data spectra alone.

4.11 *Determine the Fractional Calibration Uncertainty.* Calculate the fractional calibration uncertainty for each analyte (FCUi) according to appendix F of this addendum, and compare these values to the fractional uncertainty limits (AU_i; see section 4.1.2 of this addendum). If $FCU_i > AU_i$, either the reference spectra or analytical programs for that analyte are unsuitable.

4.12 *Verify System Configuration Suitability.* Using appendix C of this addendum, measure or obtain estimates of the noise level (RMS_{EST}, absorbance) of the FTIR system. Alternatively, construct the complete spectrometer system and determine the values RMS_{Sm} using appendix G of this addendum. Estimate the minimum measurement uncertainty for each analyte (MAU_i, ppm) and known interferant (MIU_k, ppm) using appendix D of this addendum. Verify that (a) $MAU_i < (AU_i)(DL_i)$, FRUi < AU_i, and FCUi < AU_i for each analyte and that (b) the CTS chosen meets the requirements listed in sections 4.5.1 through 4.5.5 of this addendum.

5.0 *Sampling and Analysis Procedure*

5.1 *Analysis System Assembly and Leak-Test.* Assemble the analysis system. Allow sufficient time for all system components to reach the desired temperature. Then, determine the leak-rate (L_R) and leak volume (V_L), where $V_L = L_R\, t_{SS}$. Leak volumes shall be ≤4 percent of V_{SS}.

5.2 *Verify Instrumental Performance.* Measure the noise level of the system in each analytical region using the procedure of appendix G of this addendum. If any noise level is higher than that estimated for the system in section 4.12 of this addendum, repeat the calculations of appendix D of this addendum and verify that the requirements of section 4.12 of this addendum are met; if they are not, adjust or repair the instrument and repeat this section.

5.3 *Determine the Sample Absorption Pathlength*

Record a background spectrum. Then, fill the absorption cell with CTS at the pressure P_R and record a set of CTS spectra {R3}. Store the background and unscaled CTS single beam interferograms and spectra. Using appendix H of this addendum, calculate the sample absorption pathlength (L_S) for each analytical region. The values L_S shall not differ from the approximated sample pathlength L_S' (see section 4.4 of this addendum) by more than 5 percent.

5.4 *Record Sample Spectrum.* Connect the sample line to the source. Either evacuate the absorption cell to an absolute pressure below 5 mmHg before extracting a sample from the effluent stream into the absorption cell, or pump at least ten cell volumes of sample through the cell before obtaining a sample. Record the sample pressure P_S. Generate the absorbance spectrum of the sample. Store the background and sample single beam interferograms, and document the process by which the absorbance spectra are generated from these data. (If necessary, apply the spectral transformations developed in section 5.6.2 of this addendum). The resulting sample spectrum is referred to below as S_S.

Note: Multiple sample spectra may be recorded according to the procedures of section 5.4 of this addendum before performing sections 5.5 and 5.6 of this addendum.

5.5 *Quantify Analyte Concentrations.* Calculate the unscaled analyte concentrations RUA_i and unscaled interferant concentrations RUI_K using the programs developed in section 4 of this addendum. To correct for pathlength and pressure variations between the reference and sample spectra, calculate the scaling factor, R_{LPS} using equation A.1,

$$R_{LPS} = \left(L_R P_R T_S\right) / \left(L_S P_S T_R\right) \qquad \text{(A.1)}$$

Calculate the final analyte and interferant concentrations RSA_i and RSI_k using equations A.2 and A.3,

$$RSA_i = R_{LPS} RUA_i \quad (A.2)$$

$$RSI_k = R_{LPS} RUI_k \quad (A.3)$$

5.6 *Determine Fractional Analysis Uncertainty.* Fill the absorption cell with CTS at the pressure P_S. Record a set of CTS spectra {R4}. Store the background and CTS single beam interferograms. Using appendix H of this addendum, calculate the fractional analysis uncertainty (FAU) for each analytical region. If the FAU indicated for any analytical region is greater than the required accuracy requirements determined in sections 4.1.1 through 4.1.4 of this addendum, then comparisons to previously recorded reference spectra are invalid in that analytical region, and the analyst shall perform one or both of the procedures of sections 5.6.1 through 5.6.2 of this addendum.

5.6.1 Perform instrumental checks and adjust the instrument to restore its performance to acceptable levels. If adjustments are made, repeat sections 5.3, 5.4 (except for the recording of a sample spectrum), and 5.5 of this addendum to demonstrate that acceptable uncertainties are obtained in all analytical regions.

5.6.2 Apply appropriate mathematical transformations (e.g., frequency shifting, zero-filling, apodization, smoothing) to the spectra (or to the interferograms upon which the spectra are based) generated during the performance of the procedures of section 5.3 of this addendum. Document these transformations and their reproducibility. Do not apply multiplicative scaling of the spectra, or any set of transformations that is mathematically equivalent to multiplicative scaling. Different transformations may be applied to different analytical regions. Frequency shifts shall be less than one-half the minimum instrumental linewidth, and must be applied to all spectral data points in an analytical region. The mathematical transformations may be retained for the analysis if they are also applied to the appropriate analytical regions of all sample spectra recorded, and if all original sample spectra are digitally stored. Repeat sections 5.3, 5.4 (except the recording of a sample spectrum), and 5.5 of this addendum to demonstrate that these transformations lead to acceptable calculated concentration uncertainties in all analytical regions.

6.0 Post-Analysis Evaluations

Estimate the overall accuracy of the analyses performed in accordance with sections 5.1 through 5.6 of this addendum using the procedures of sections 6.1 through 6.3 of this addendum.

6.1 *Qualitatively Confirm the Assumed Matrix.* Examine each analytical region of the sample spectrum for spectral evidence of unexpected or unidentified interferants. If found, identify the interfering compounds (see Reference C for guidance) and add them to the list of known interferants. Repeat the procedures of section 4 of this addendum to include the interferants in the uncertainty calculations and analysis procedures. Verify that the MAU and FCU values do not increase beyond acceptable levels for the application requirements. Re-calculate the analyte concentrations (section 5.5 of this addendum) in the affected analytical regions.

6.2 *Quantitatively Evaluate Fractional Model Uncertainty (FMU).* Perform the procedures of either section 6.2.1 or 6.2.2 of this addendum:

6.2.1 Using appendix I of this addendum, determine the fractional model error (FMU) for each analyte.

6.2.2 Provide statistically determined uncertainties FMU for each analyte which are equivalent to two standard deviations at the 95 percent confidence level. Such determinations, if employed, must be based on mathematical examinations of the pertinent sample spectra (not the reference spectra alone). Include in the report of the analysis (see section 7.0 of this addendum) a complete description of the determination of the concentration uncertainties.

6.3 *Estimate Overall Concentration Uncertainty (OCU).* Using appendix J of this addendum, determine the overall concentration uncertainty (OCU) for each analyte. If the OCU is larger than the required accuracy for any analyte, repeat sections 4 and 6 of this addendum.

7.0 *Reporting Requirements*

[Documentation pertaining to virtually all the procedures of sections 4, 5, and 6 will be required. Software copies of reference spectra and sample spectra will be retained for some minimum time following the actual testing.]

8.0 *References*

(A) Standard Practices for General Techniques of Infrared Quantitative Analysis (American Society for Testing and Materials, Designation E 168–88).

(B) The Coblentz Society Specifications for Evaluation of Research Quality Analytical Infrared Reference Spectra (Class II); Anal. Chemistry 47, 945A (1975); Appl. Spectroscopy 444, pp. 211–215, 1990.

(C) Standard Practices for General Techniques for Qualitative Infrared Analysis, American Society for Testing and Materials, Designation E 1252–88.

(D) ''EPA Traceability Protocol for Assay and Certification of Gaseous Calibration Standards,'' U.S. Environmental Protection Agency Publication No. EPA/600/R–93/224, December 1993.

Appendix A to Addendum to Method 320—Definitions of Terms and Symbols

A.1 *Definitions of Terms.* All terms used in this method that are not defined below have the meaning given to them in the CAA and in subpart A of this part.

Absorption band means a contiguous wavenumber region of a spectrum (equivalently, a contiguous set of absorbance spectrum data points) in which the absorbance passes through a maximum or a series of maxima.

Absorption pathlength means the distance in a spectrophotometer, measured in the direction of propagation of the beam of radiant energy, between the surface of the specimen on which the radiant energy is incident and the surface of the specimen from which it is emergent.

Analytical region means a contiguous wavenumber region (equivalently, a contiguous set of absorbance spectrum data points) used in the quantitative analysis for one or more analytes.

Note: The quantitative result for a single analyte may be based on data from more than one analytical region.

Apodization means modification of the ILS function by multiplying the interferogram by a weighing function whose magnitude varies with retardation.

Background spectrum means the single beam spectrum obtained with all system components without sample present.

Baseline means any line drawn on an absorption spectrum to establish a reference point that represents a function of the radiant power incident on a sample at a given wavelength.

Beers's law means the direct proportionality of the absorbance of a compound in a homogeneous sample to its concentration.

Calibration transfer standard (CTS) gas means a gas standard of a compound used to achieve and/or demonstrate suitable quantitative agreement between sample spectra and the reference spectra; see section 4.5.1 of this addendum.

Compound means a substance possessing a distinct, unique molecular structure.

Concentration (c) means the quantity of a compound contained in a unit quantity of sample. The unit ''ppm'' (number, or mole, basis) is recommended.

Concentration-pathlength product means the mathematical product of concentration of the species and absorption pathlength. For reference spectra, this is a known quantity; for sample spectra, it is the quantity directly determined from Beer's law. The units ''centimeters-ppm'' or ''meters-ppm'' are recommended.

Derivative absorption spectrum means a plot of rate of change of absorbance or of any function of absorbance with respect to wavelength or any function of wavelength.

Double beam spectrum means a transmission or absorbance spectrum derived by dividing the sample single beam spectrum by the background spectrum.

Note: The term ''double-beam'' is used elsewhere to denote a spectrum in which the sample and background interferograms are collected simultaneously along physically distinct absorption paths. Here, the term denotes a spectrum in which the sample and background interferograms are collected at different times along the same absorption path.

Fast Fourier transform (FFT) means a method of speeding up the computation of a discrete FT by factoring the data into sparse matrices containing mostly zeros.

Flyback means interferometer motion during which no data are recorded.

Fourier transform (FT) means the mathematical process for converting an amplitude-time spectrum to an amplitude-frequency spectrum, or vice versa.

Fourier transform infrared (FTIR) spectrometer means an analytical system that

employs a source of mid-infrared radiation, an interferometer, an enclosed sample cell of known absorption pathlength, an infrared detector, optical elements that transfer infrared radiation between components, and a computer system. The time-domain detector response (interferogram) is processed by a Fourier transform to yield a representation of the detector response vs. infrared frequency.

Note: When FTIR spectrometers are interfaced with other instruments, a slash should be used to denote the interface; e.g., GC/FTIR; HPCL/FTIR, and the use of FTIR should be explicit; i.e., FTIR not IR.

Frequency, v means the number of cycles per unit time.

Infrared means the portion of the electromagnetic spectrum containing wavelengths from approximately 0.78 to 800 microns.

Interferogram, I(σ) means record of the modulated component of the interference signal measured as a function of retardation by the detector.

Interferometer means device that divides a beam of radiant energy into two or more paths, generates an optical path difference between the beams, and recombines them in order to produce repetitive interference maxima and minima as the optical retardation is varied.

Linewidth means the full width at half maximum of an absorption band in units of wavenumbers (cm^{-1}).

Mid-infrared means the region of the electromagnetic spectrum from approximately 400 to 5000 cm^{-1}.

Reference spectra means absorption spectra of gases with known chemical compositions, recorded at a known absorption pathlength, which are used in the quantitative analysis of gas samples.

Retardation, σ means optical path difference between two beams in an interferometer; also known as ''optical path difference'' or ''optical retardation.''

Scan means digital representation of the detector output obtained during one complete motion of the interferometer's moving assembly or assemblies.

Scaling means application of a multiplicative factor to the absorbance values in a spectrum.

Single beam spectrum means Fourier-transformed interferogram, representing the detector response vs. wavenumber.

Note: The term ''single-beam'' is used elsewhere to denote any spectrum in which the sample and background interferograms are recorded on the same physical absorption path; such usage differentiates such spectra from those generated using interferograms recorded along two physically distinct absorption paths (see ''double-beam spectrum'' above). Here, the term applies (for example) to the two spectra used directly in the calculation of transmission and absorbance spectra of a sample.

Standard reference material means a reference material, the composition or properties of which are certified by a recognized standardizing agency or group.

Note: The equivalent ISO term is ''certified reference material.''

Transmittance, T means the ratio of radiant power transmitted by the sample to the radiant power incident on the sample. Estimated in FTIR spectroscopy by forming the ratio of the single-beam sample and background spectra.

Wavenumber, $\bar{v}$ means the number of waves per unit length.

Note: The usual unit of wavenumber is the reciprocal centimeter, cm^{-1}. The wavenumber is the reciprocal of the wavelength, λ, when λ is expressed in centimeters.

Zero-filling means the addition of zero-valued points to the end of a measured interferogram.

Note: Performing the FT of a zero-filled interferogram results in correctly interpolated points in the computed spectrum.

A.2 *Definitions of Mathematical Symbols.* The symbols used in equations in this protocol are defined as follows:

(1) A, absorbance = the logarithm to the base 10 of the reciprocal of the transmittance (T).

$$A = \log_{10}\left(\frac{1}{T}\right) = -\log_{10} T$$

(2) AAI_{im} = band area of the ith analyte in the mth analytical region, at the concentration (CL_i) corresponding to the product of its required detection limit (DL_i) and analytical uncertainty limit (AU_i) .

(3) AAV_{im} = average absorbance of the ith analyte in the mth analytical region, at the concentration (CL_i) corresponding to the product of its required detection limit (DL_i) and analytical uncertainty limit (AU_i) .

(4) ASC, accepted standard concentration = the concentration value assigned to a chemical standard.

(5) ASCPP, accepted standard concentration-pathlength product = for a chemical standard, the product of the ASC and the sample absorption pathlength. The units ''centimeters-ppm'' or ''meters-ppm'' are recommended.

(6) AU_i, analytical uncertainty limit = the maximum permissible fractional uncertainty of analysis for the ith analyte concentration, expressed as a fraction of the analyte concentration determined in the analysis.

(7) AVT_m = average estimated total absorbance in the mth analytical region.

(8) $CKWN_k$ = estimated concentration of the kth known interferant.

(9) $CMAX_i$ = estimated maximum concentration of the ith analyte.

(10) $CPOT_j$ = estimated concentration of the jth potential interferant.

(11) DL_i, required detection limit = for the ith analyte, the lowest concentration of the analyte for which its overall fractional uncertainty (OFU_i) is required to be less than the analytical uncertainty limit (AU_i).

(12) FC_m = center wavenumber position of the mth analytical region.

(13) FAU_i, fractional analytical uncertainty = calculated uncertainty in the measured concentration of the ith analyte because of errors in the mathematical comparison of reference and sample spectra.

(14) FCU_i, fractional calibration uncertainty = calculated uncertainty in the measured concentration of the ith analyte because of errors in Beer's law modeling of the reference spectra concentrations.

(15) FFL_m = lower wavenumber position of the CTS absorption band associated with the mth analytical region.

(16) FFU_m = upper wavenumber position of the CTS absorption band associated with the mth analytical region.

(17) FL_m = lower wavenumber position of the mth analytical region.

(18) FMU_i, fractional model uncertainty = calculated uncertainty in the measured concentration of the ith analyte because of errors in the absorption model employed.

(19) FN_L = lower wavenumber position of the CTS spectrum containing an absorption band at least as narrow as the analyte absorption bands.

(20) FN_U = upper wavenumber position of the CTS spectrum containing an absorption band at least as narrow as the analyte absorption bands.

(21) FRU_i, fractional reproducibility uncertainty = calculated uncertainty in the measured concentration of the ith analyte because of errors in the reproducibility of spectra from the FTIR system.

(22) FU_m = upper wavenumber position of the mth analytical region.

(23) IAI_{jm} = band area of the jth potential interferant in the mth analytical region, at its expected concentration ($CPOT_j$).

(24) IAV_{im} = average absorbance of the ith analyte in the mth analytical region, at its expected concentration ($CPOT_j$).

(25) $ISC_{i\ or\ k}$, indicated standard concentration = the concentration from the computerized analytical program for a single-compound reference spectrum for the ith analyte or k^{th} known interferant.

(26) kPa = kilo-Pascal (see Pascal).

(27) L_S' = estimated sample absorption pathlength.

(28) L_R = reference absorption pathlength.

(29) L_S = actual sample absorption pathlength.

(30) MAU_i = mean of the MAU_{im} over the appropriate analytical regions.

(31) MAU_{im}, minimum analyte uncertainty = the calculated minimum concentration for which the analytical uncertainty limit (AU_i) in the measurement of the ith analyte, based on spectral data in the mth analytical region, can be maintained.

(32) MIU_j = mean of the MIU_{jm} over the appropriate analytical regions.

(33) MIU_{jm}, minimum interferant uncertainty = the calculated minimum concentration for which the analytical uncertainty limit $CPOT_j/20$ in the measurement of the jth interferant, based on spectral data in the mth analytical region, can be maintained.

(34) MIL, minimum instrumental linewidth = the minimum linewidth from the FTIR system, in wavenumbers.

Note: The MIL of a system may be determined by observing an absorption band known (through higher resolution examinations) to be narrower than indicated by the system. The MIL is fundamentally limited by the retardation of the interferometer, but is also affected by other operational parameters (e.g., the choice of apodization).

(35) N_i = number of analytes.

(36) N_j = number of potential interferants.

(37) N_k = number of known interferants.

(38) N_{scan} = the number of scans averaged to obtain an interferogram.

(39) OFU_i = the overall fractional uncertainty in an analyte concentration determined in the analysis (OFU_i = MAX{FRU_i, FCU_i, FAU_i, FMU_i}).

(40) Pascal (Pa) = metric unit of static pressure, equal to one Newton per square meter; one atmosphere is equal to 101,325 Pa; 1/760 atmosphere (one Torr, or one millimeter Hg) is equal to 133.322 Pa.

(41) P_{min} = minimum pressure of the sampling system during the sampling procedure.

(42) P_S' = estimated sample pressure.

(43) P_R = reference pressure.

(44) P_S = actual sample pressure.

(45) RMS_{Sm} = measured noise level of the FTIR system in the mth analytical region.

(46) RMSD, root mean square difference = a measure of accuracy determined by the following equation:

$$RMSD = \sqrt{\left(\frac{1}{n}\right)\sum_{i=1}^{n} e_i^2}$$

Where:

n = the number of observations for which the accuracy is determined.

e_i = the difference between a measured value of a property and its mean value over the n observations.

Note: The RMSD value ''between a set of n contiguous absorbance values (A_i) and the mean of the values'' (A_M) is defined as

$$RMSD = \sqrt{\left(\frac{1}{n}\right)\sum_{i-1}^{n}\left(A_i - A_M\right)^2}$$

(47) RSA_i = the (calculated) final concentration of the ith analyte.

(48) RSI_k = the (calculated) final concentration of the kth known interferant.

(49) t_{scan}, scan time = time used to acquire a single scan, not including flyback.

(50) t_S, signal integration period = the period of time over which an interferogram is averaged by addition and scaling of individual scans. In terms of the number of scans N_{scan} and scan time t_{scan}, $t_S = N_{scan}t_{scan}$.

(51) t_{SR} = signal integration period used in recording reference spectra.

(52) t_{SS} = signal integration period used in recording sample spectra.

(53) T_R = absolute temperature of gases used in recording reference spectra.

(54) T_S = absolute temperature of sample gas as sample spectra are recorded.

(55) TP, Throughput = manufacturer's estimate of the fraction of the total infrared power transmitted by the absorption cell and transfer optics from the interferometer to the detector.

(56) V_{SS} = volume of the infrared absorption cell, including parts of attached tubing.

(57) W_{ik} = weight used to average over analytical regions k for quantities related to the analyte i; see appendix D of this addendum.

Appendix B to Addendum to Method 320—Identifying Spectral Interferants

B.1 *General*

B.1.1 Assume a fixed absorption pathlength equal to the value L_S'.

B.1.2 Use band area calculations to compare the relative absorption strengths of the analytes and potential interferants. In the mth analytical region (FL_m to FU_m), use either rectangular or trapezoidal approximations to determine the band areas described below (see Reference A, sections A.3.1 through A.3.3). Document any baseline corrections applied to the spectra.

B.1.3 Use the average total absorbance of the analytes and potential interferants in each analytical region to determine whether the analytical region is suitable for analyte concentration determinations.

Note: The average absorbance in an analytical region is the band area divided by the width of the analytical region in wavenumbers. The average total absorbance in an analytical region is the sum of the average absorbances of all analytes and potential interferants.

B.2 *Calculations*

B.2.1 Prepare spectral representations of each analyte at the concentration CL_i = (DL_i)(AU_i), where DL_i is the required detection limit and AU_i is the maximum permissible analytical uncertainty. For the mth analytical region, calculate the band area (AAI_{im}) and average absorbance (AAV_{im}) from these scaled analyte spectra.

B.2.2 Prepare spectral representations of each potential interferant at its expected concentration ($CPOT_j$). For the mth analytical region, calculate the band area (IAI_{jm}) and average absorbance (IAV_{jm}) from these scaled potential interferant spectra.

B.2.3 Repeat the calculation for each analytical region, and record the band area results in matrix form as indicated in Figure B.1.

B.2.4 If the band area of any potential interferant in an analytical region is greater than the one-half the band area of any analyte (i.e., $IAI_{jm} > 0.5\ AAI_{im}$ for any pair ij and any m), classify the potential interferant as a known interferant. Label the known interferants k = 1 to K. Record the results in matrix form as indicated in Figure B.2.

B.2.5 Calculate the average total absorbance (AVT_m) for each analytical region and record the values in the last row of the matrix described in Figure B.2. Any analytical region where $AVT_m > 2.0$ is unsuitable.

BILLING CODE 6560–50–P

FIGURE B.1 Presentation of Potential Interferant Calculations.

	Analytical Regions 1 . . . . . M
	Analyte Labels
1	AAI_{11} . . . AAI_{1M}
.	. .
.	. .
I	AAI_{I1} . . . AAI_{IM}
Potential Interferant Labels	
1	IAI_{11} . . . IAI_{1M}
.	. .
.	. .
J	IAI_{J1} . . . IAI_{JM}

FIGURE B.2 Presentation of Known Interferant Calculations

	Analytical Regions 1 . . . . . M
Analyte Labels	
1	AAI_{11} . . . . . AAI_{1M}
.	. .
.	. .
I	AAI_{I1} . . . . . AAI_{IM}
Known Interferant Labels	
1	IAI_{11} . . . . . IAI_{1M}
.	. .
.	. .
K	IAI_{K1} . . . . . IAI_{KM}
	323
Total Average Absorbance	AVT_1 AVT_M

BILLING CODE 6560–50–C

Appendix C to Addendum to Method 320—Estimating Noise Levels

C.1 *General*

C.1.1 The root-mean-square (RMS) noise level is the standard measure of noise in this addendum. The RMS noise level of a contiguous segment of a spectrum is defined as the RMS difference (RMSD) between the absorbance values which form the segment and the mean value of that segment (see appendix A of this addendum).

C.1.2 The RMS noise value in double-beam absorbance spectra is assumed to be inversely proportional to: (a) the square root of the signal integration period of the sample single beam spectra from which it is formed, and (b) the total infrared power transmitted through the interferometer and absorption cell.

C.1.3 Practically, the assumption of C.1.2 allows the RMS noise level of a complete system to be estimated from the quantities described in sections C.1.3.1 through C.1.3.4:

C.1.3.1 RMS_{MAN}, the noise level of the system (in absorbance units), without the absorption cell and transfer optics, *under those conditions necessary to yield the specified minimum instrumental linewidth,* e.g., Jacquinot stop size.

C.1.3.2 t_{MAN}, the manufacturer's signal integration time used to determine RMS_{MAN}.

C.1.3.3 t_{SS}, the signal integration time for the analyses.

C.1.3.4 TP, the manufacturer's estimate of the fraction of the total infrared power transmitted by the absorption cell and transfer optics from the interferometer to the detector.

C.2 *Calculations*

C.2.1 Obtain the values of RMS_{MAN}, t_{MAN}, and TP from the manufacturers of the equipment, or determine the noise level by direct measurements with the completely constructed system proposed in section 4 of this addendum.

C.2.2 Calculate the noise value of the system (RMS_{EST}) using equation C.1.

$$RMS_{EST} = RMS_{MAN} \quad TP\sqrt{\frac{t_{ss}}{t_{MAN}}} \qquad (C.1)$$

Appendix D to Addendum to Method 320—Estimating Minimum Concentration Measurement Uncertainties (MAU and MIU)

D.1 *General*

Estimate the minimum concentration measurement uncertainties for the ith analyte (MAU_i) and j^{th} interferant (MIU_j) based on the spectral data in the mth analytical region by comparing the analyte band area in the analytical region (AAI_{im}) and estimating or measuring the noise level of the system (RMS_{EST} or RMS_{SM}).

Note: For a single analytical region, the MAU or MIU value is the concentration of the analyte or interferant for which the band area is equal to the product of the analytical region width (in wavenumbers) and the noise level of the system (in absorbance units). If data from more than one analytical region are used in the determination of an analyte concentration, the MAU or MIU is the mean of the separate MAU or MIU values calculated for each analytical region.

D.2 *Calculations*

D.2.1 For each analytical region, set RMS = RMS_{SM} if measured (appendix G of this addendum), or set RMS = RMS_{EST} if estimated (appendix C of this addendum).

D.2.2 For each analyte associated with the analytical region, calculate MAU_{im} using equation D.1,

$$MAU_{im} = (RMS)\left(DL_i\right)\left(AU_i\right)\frac{\left(FU_m - FL_m\right)}{AAI_{im}} \qquad (D.1)$$

D.2.3 If only the mth analytical region is used to calculate the concentration of the ith analyte, set $MAU_i = MAU_{im}$.

D.2.4 If more than one analytical region is used to calculate the concentration of the ith analyte, set MAU_i equal to the weighted mean of the appropriate MAU_{im} values calculated above; the weight for each term in the mean is equal to the fraction of the total wavenumber range used for the calculation represented by each analytical region. Mathematically, if the set of analytical regions employed is {m′}, then the MAU for each analytical region is given by equation D.2.

$$MAU_i = \sum_{k\in\{m'\}} W_k MAU_{ik} \qquad (D.2)$$

where the weight W_{ik} is defined for each term in the sum as

$$W_{ik} = \left(FM_k - FL_k\right)\left(\sum_{p\in\{m'\}}\left[FM_p - FL_p\right]\right)^{-1} \qquad (D.3)$$

D.2.5 Repeat sections D.2.1 through D.2.4 of this appendix to calculate the analogous values MIU_j for the interferants j = 1 to J. Replace the value (AU_i) (DL_i) in equation D.1 with $CPOT_j/20$; replace the value AAI_{im} in equation D.1 with IAI_{jm}.

Appendix E to Addendum to Method 320—Determining Fractional Reproducibility Uncertainties (FRU)

E.1 *General*

To estimate the reproducibility of the spectroscopic results of the system, compare the CTS spectra recorded before and after preparing the reference spectra. Compare the difference between the spectra to their average band area. Perform the calculation for each analytical region on the portions of the CTS spectra associated with that analytical region.

E.2 *Calculations*

E.2.1 The CTS spectra {R1} consist of N spectra, denoted by S_{1i}, i=1, N. Similarly, the CTS spectra {R2} consist of N spectra, denoted by S_{2i}, i=1, N. Each S_{ki} is the spectrum of a single compound, where i denotes the compound and k denotes the set {Rk} of which S_{ki} is a member. Form the spectra S_3 according to $S_{3i} = S_{2i} - S_{1i}$ for each i. Form the spectra S_4 according to $S_{4i} = [S_{2i}+S_{1i}]/2$ for each i.

E.2.2 Each analytical region m is associated with a portion of the CTS spectra S_{2i} and S_{1i}, for a particular i, with lower and upper wavenumber limits FFL_m and FFU_m, respectively.

E.2.3 For each m and the associated i, calculate the band area of S_{4i} in the wavenumber range FFU_m to FFL_m. Follow the guidelines of section B.1.2 of this addendum for this band area calculation. Denote the result by BAV_m.

E.2.4 For each m and the associated i, calculate the RMSD of S_{3i} between the absorbance values and their mean in the wavenumber range FFU_m to FFL_m. Denote the result by $SRMS_m$.

E.2.5 For each analytical region m, calculate FM_m using equation E.1,

$$FM_m = SRMS_m\left(FFU_m - FFL_m\right)/BAV_m \qquad (E.1)$$

E.2.6 If only the mth analytical region is used to calculate the concentration of the ith analyte, set $FRU_i = FM_m$.

E.2.7 If a number p_i of analytical regions are used to calculate the concentration of the ith analyte, set FRU_i equal to the weighted mean of the appropriate FM_m values calculated according to section E.2.5. Mathematically, if the set of analytical regions employed is {m′}, then FRU_i is given by equation E.2,

$$FRU_i = \sum_{k \in \{m'\}} W_{ik} FM_k \qquad (E.2)$$

where the W_{ik} are calculated as described in appendix D of this addendum.

Appendix F of Addendum to Method 320—Determining Fractional Calibration Uncertainties (FCU)

F.1 *General*

F.1.1 The concentrations yielded by the computerized analytical program applied to each single-compound reference spectrum are defined as the indicated standard concentrations (ISC's). The ISC values for a single compound spectrum should ideally equal the accepted standard concentration (ASC) for one analyte or interferant, and should ideally be zero for all other compounds. Variations from these results are caused by errors in the ASC values, variations from the Beer's law (or modified Beer's law) model used to determine the concentrations, and noise in the spectra. When the first two effects dominate, the systematic nature of the errors is often apparent and the analyst shall take steps to correct them.

F.1.2 When the calibration error appears non-systematic, apply the procedures of sections F.2.1 through F.2.3 of this appendix to estimate the fractional calibration uncertainty (FCU) for each compound. The FCU is defined as the mean fractional error between the ASC and the ISC for all reference spectra with non-zero ASC for that compound. The FCU for each compound shall be less than the required fractional uncertainty specified in section 4.1 of this addendum.

F.1.3 The computerized analytical programs shall also be required to yield acceptably low concentrations for compounds with ISC = 0 when applied to the reference spectra. The ISC of each reference spectrum for each analyte or interferant shall not exceed that compound's minimum measurement uncertainty (MAU or MIU).

F.2 *Calculations*

F.2.1 Apply each analytical program to each reference spectrum. Prepare a similar table to that in Figure F.1 to present the ISC and ASC values for each analyte and interferant in each reference spectrum. Maintain the order of reference file names and compounds employed in preparing Figure F.1.

F.2.2 For all reference spectra in Figure F.1, verify that the absolute values of the ISC's are less than the compound's MAU (for analytes) or MIU (for interferants).

F.2.3 For each analyte reference spectrum, calculate the quantity (ASC–ISC)/ASC. For each analyte, calculate the mean of these values (the FCU_i for the ith analyte) over all reference spectra. Prepare a similar table to that in Figure F.2 to present the FCU_i and analytical uncertainty limit (AU_i) for each analyte.

FIGURE F.1.—PRESENTATION OF ACCEPTED STANDARD CONCENTRATIONS (ASC'S) AND INDICATED STANDARD CONCENTRATIONS (ISC'S)

Compound name	Reference spectrum file name	ASC (ppm)	ISC (ppm)					
					Analytes i=1 j=1	Interferants I J		

FIGURE F.2—PRESENTATION OF FRACTIONAL CALIBRATION UNCERTAINTIES (FCU'S) AND ANALYTICAL UNCERTAINTIES (AU'S)

Analyte name	FCU (%)	AU (%)

Appendix G to Addendum to Method 320—Measuring Noise Levels

G.1 *General*

The root-mean-square (RMS) noise level is the standard measure of noise. The RMS noise level of a contiguous segment of a spectrum is the RMSD between the absorbance values that form the segment and the mean value of the segment (see appendix A of this addendum).

G.2 *Calculations*

G.2.1 Evacuate the absorption cell or fill it with UPC grade nitrogen at approximately one atmosphere total pressure.

G.2.2 Record two single beam spectra of signal integration period t_{SS}.

G.2.3 Form the double beam absorption spectrum from these two single beam spectra, and calculate the noise level RMS_{Sm} in the M analytical regions.

Appendix H of Addendum to Method 320—Determining Sample Absorption Pathlength (L_S) and Fractional Analytical Uncertainty (FAU)

H.1 *General*

Reference spectra recorded at absorption pathlength (L_R), gas pressure (P_R), and gas absolute temperature (T_R) may be used to determine analyte concentrations in samples whose spectra are recorded at conditions

different from that of the reference spectra, i.e., at absorption pathlength (L_S), absolute temperature (T_S), and pressure (P_S). This appendix describes the calculations for estimating the fractional uncertainty (FAU) of this practice. It also describes the calculations for determining the sample absorption pathlength from comparison of CTS spectra, and for preparing spectra for further instrumental and procedural checks.

H.1.1 Before sampling, determine the sample absorption pathlength using least squares analysis. Determine the ratio L_S/L_R by comparing the spectral sets {R1} and {R3}, which are recorded using the same CTS at L_S and L_R, and T_S and T_R, but both at P_R.

H.1.2 Determine the fractional analysis uncertainty (FAU) for each analyte by comparing a scaled CTS spectral set, recorded at L_S, T_S, and P_S, to the CTS reference spectra of the same gas, recorded at L_R, T_R, and P_R. Perform the quantitative comparison after recording the sample spectra, based on band areas of the spectra in the CTS absorbance band associated with each analyte.

H.2 *Calculations*

H.2.1 *Absorption Pathlength Determination.* Perform and document separate linear baseline corrections to each analytical region in the spectral sets {R1} and {R3}. Form a one-dimensional array A_R containing the absorbance values from all segments of {R1} that are associated with the analytical regions; the members of the array are A_{Ri}, i = 1, n. Form a similar one-dimensional array A_S from the absorbance values in the spectral set {R3}; the members of the array are A_{Si}, i = 1, n. Based on the model $A_S = rA_R + E$, determine the least-squares estimate of r′, the value of r which minimizes the square error E^2. Calculate the sample absorption pathlength, L_S, using equation H.1,

$$L_s = r'\left(T_s/T_R\right)L_R \qquad \text{(H.1)}$$

H.2.2 *Fractional Analysis Uncertainty.* Perform and document separate linear baseline corrections to each analytical region in the spectral sets {R1} and {R4}. Form the arrays A_S and A_R as described in section H.2.1 of this appendix, using values from {R1} to form A_R, and values from {R4} to form A_S. Calculate $NRMS_E$ and IA_{AV} using equations H.2 and H.3,

$$NRMS_E = \sqrt{\sum_{i=1}^{n}\left[A_{Si} - \left(\frac{T_R}{T_S}\right)\left(\frac{L_S}{L_R}\right)\left(\frac{P_S}{P_R}\right)A_{Ri}\right]} \qquad \text{(H.2)}$$

$$IA_{AV} = \frac{1}{2}\sum_{i=1}^{n}\left[A_{Si} + \left(\frac{T_R}{T_S}\right)\left(\frac{L_S}{L_R}\right)\left(\frac{P_S}{P_R}\right)A_{Ri}\right] \qquad \text{(H.3)}$$

The fractional analytical uncertainty, FAU, is given by equation H.4,

$$FAU = \frac{NRMS_E}{IA_{AV}} \qquad \text{(H.4)}$$

Appendix I to Addendum to Method 320—Determining Fractional Model Uncertainties (FMU)

I.1 *General*

To prepare analytical programs for FTIR analyses, the sample constituents must first be assumed. The calculations in this appendix, based upon a simulation of the sample spectrum, shall be used to verify the appropriateness of these assumptions. The simulated spectra consist of the sum of single compound reference spectra scaled to represent their contributions to the sample absorbance spectrum; scaling factors are based on the indicated standard concentrations (ISC) and measured (sample) analyte and interferant concentrations, the sample and reference absorption pathlengths, and the sample and reference gas pressures. No band-shape correction for differences in the temperature of the sample and reference spectra gases is made; such errors are included in the FMU estimate. The actual and simulated sample spectra are quantitatively compared to determine the fractional model uncertainty; this comparison uses the reference spectra band areas and residuals in the difference spectrum formed from the actual and simulated sample spectra.

I.2 *Calculations*

I.2.1 For each analyte (with scaled concentration RSA_i), select a reference spectrum SA_i with indicated standard concentration ISC_i. Calculate the scaling factors, RA_i, using equation I.1,

$$RA_i = \frac{T_R\, L_S\, P_S\ \ RSA_i}{T_S\, L_R\, P_R\ \ ISC_i} \qquad \text{(I.1)}$$

Form the spectra SAC_i by scaling each SA_i by the factor RA_i.

I.2.2 For each interferant, select a reference spectrum SI_k with indicated standard concentration ISC_k. Calculate the scaling factors, RI_k, using equation I.2,

$$RI_k = \frac{T_R\, L_S\, P_S\, RSI_k}{T_S\, L_R\, P_R\, ISC_k} \qquad \text{(I.2)}$$

Form the spectra SIC_k by scaling each SI_k by the factor RI_k.

I.2.3 For each analytical region, determine by visual inspection which of the spectra SAC_i and SIC_k exhibit absorbance bands within the analytical region. Subtract each spectrum SAC_i and SIC_k exhibiting absorbance from the sample spectrum S_S to form the spectrum SUB_S. To save analysis time and to avoid the introduction of unwanted noise into the subtracted spectrum, it is recommended that the calculation be made (1) only for those spectral data points within the analytical regions, and (2) for each analytical region separately using the original spectrum S_S.

I.2.4 For each analytical region m, calculate the RMSD of SUB_S between the absorbance values and their mean in the region FFU_m to FFL_m. Denote the result by $RMSS_m$.

I.2.5 For each analyte i, calculate FM_m, using equation I.3,

$$FM_m = \frac{RMSS_m\left(FFU_m - FFL_m\right)AU_i DL_i}{AAI_i\, RSA_i} \qquad \text{(I.3)}$$

for each analytical region associated with the analyte.

I.2.6 If only the mth analytical region is used to calculate the concentration of the ith analyte, set $FMU_i = FM_m$.

I.2.7 If a number of analytical regions are used to calculate the concentration of the ith analyte, set FM_i equal to the weighted mean of the appropriate FM_m values calculated using equation I–3. Mathematically, if the set of analytical regions employed is {m′}, then the fractional model uncertainty, FMU, is given by equation I.4,

$$FMU_i = \sum_{k\in\{m'\}} W_{ik} FM_k \qquad \text{(I.4)}$$

where W_{ik} is calculated as described in appendix D of this addendum.

Appendix J of Addendum to Method 320—Determining Overall Concentration Uncertainties (OCU)

The calculations in this addendum estimate the measurement uncertainties for various FTIR measurements. The lowest possible overall concentration uncertainty (OCU) for an analyte is its MAU value, which is an estimate of the absolute concentration uncertainty when spectral noise dominates the measurement error. However, if the product of the largest fractional concentration uncertainty (FRU, FCU, FAU, or FMU) and the measured concentration of an analyte exceeds the MAU for the analyte, then the OCU is this product. In mathematical terms, set $OFU_i = MAX\{FRU_i, FCU_i, FAU_i, FMU_i\}$ and $OCU_i = MAX\{RSA_i*OFU_i, MAU_i\}$.

Test Method 321—Measurement of Gaseous Hydrogen Chloride Emissions At Portland Cement Kilns by Fourier Transform Infrared (FTIR) Spectroscopy

1.0 *Introduction*

This method should be performed by those persons familiar with the operation of Fourier Transform Infrared (FTIR) instrumentation in the application to source sampling. This document describes the sampling procedures for use in the application of FTIR spectrometry for the determination of vapor phase hydrogen chloride (HCl) concentrations both before and after particulate matter control devices installed at portland cement kilns. A procedure for analyte spiking is included for quality assurance. This method is considered to be self validating provided that the requirements listed in section 9 of this method are followed. The analytical procedures for interpreting infrared spectra from emission measurements are described in the ''Protocol For The Use of Extractive Fourier Transform Infrared (FTIR) Spectrometry in Analyses of Gaseous Emissions From Stationary Industrial Sources'', included as an addendum to proposed Method 320 of this appendix (hereafter referred to as the ''FTIR Protocol)''. References 1 and 2 describe the use of FTIR spectrometry in field measurements. Sample transport presents the principal difficulty in directly measuring HCl emissions. This identical problem must be overcome by any extractive measurement method. HCl is reactive and water soluble. The sampling system must be adequately designed to prevent sample condensation in the system.

1.1 *Scope and Application*

This method is specifically designed for the application of FTIR Spectrometry in extractive measurements of gaseous HCl concentrations in portland cement kiln emissions.

1.2 *Applicability*

This method applies to the measurement of HCl [CAS No. 7647–01–0]. This method can be applied to the determination of HCl concentrations both before and after particulate matter control devices installed at portland cement manufacturing facilities. This method applies to either continuous flow through measurement (with isolated sample analysis) or grab sampling (batch analysis). HCl is measured using the mid-infrared spectral region for analysis (about 400 to 4000 cm^{-1} or 25 to 2.5 µm). Table 1 lists the suggested analytical region for quantification of HCl taking the interference from water vapor into consideration.

TABLE 1.—EXAMPLE ANALYTICAL REGION FOR HCL

Compound	Analytical region (cm^{-1})	Potential interferants
Hydrogen chloride	2679–2840	Water.

1.3 *Method Range and Sensitivity*

1.3.1 The analytical range is determined by the instrumental design and the composition of the gas stream. For practical purposes there is no upper limit to the range because the pathlength may be reduced or the sample may be diluted. The lower detection range depends on (1) the absorption coefficient of the compound in the analytical frequency region, (2) the spectral resolution, (3) the interferometer sampling time, (4) the detector sensitivity and response, and (5) the absorption pathlength.

1.3.2 The practical lower quantification range is usually higher than the instrument sensitivity allows and is dependent upon (1) the presence of interfering species in the exhaust gas including H_2O, CO_2, and SO_2, (2) analyte losses in the sampling system, (3) the optical alignment of the gas cell and transfer optics, and (4) the quality of the reflective surfaces in the cell (cell throughput). Under typical test conditions (moisture content of up to 30% and CO_2 concentrations from 1 to 15 percent), a 22 meter path length cell with a suitable sampling system may achieve a lower quantification range of from 1 to 5 ppm for HCl.

1.4 *Data Quality Objectives*

1.4.1 In designing or configuring the analytical system, data quality is determined by measuring of the root mean square deviation (RMSD) of the absorbance values within a chosen spectral (analytical) region. The RMSD provides an indication of the signal-to-noise ratio (S/N) of the spectral baseline. Appendix D of the FTIR Protocol (the addendum to Method 320 of this appendix) presents a discussion of the relationship between the RMSD, lower detection limit, DL_i, and analytical uncertainty, AU_i. It is important to consider the target analyte quantification limit when performing testing with FTIR instrumentation, and to optimize the system to achieve the desired detection limit.

1.4.2 Data quality is determined by measuring the root mean square (RMS) noise level in each analytical spectral region (appendix C of the FTIR Protocol). The RMS noise is defined as the root mean square deviation (RMSD) of the absorbance values in an analytical region from the mean absorbance value in the same region. Appendix D of the *FTIR Protocol* defines the minimum analyte uncertainty (MAU), and how the RMSD is used to calculate the MAU. The MAU_{im} is the minimum concentration of the ith analyte in the mth analytical region for which the analytical uncertainty limit can be maintained. Table 2 presents example values of AU and MAU using the analytical region presented in Table 1.

TABLE 2.—EXAMPLE PRE-TEST PROTOCOL CALCULATIONS FOR HYDROGEN CHLORIDE

	HCl
Reference concentration (ppm-meters)/K	11.2
Reference Band area	2.881

TABLE 2.—EXAMPLE PRE-TEST PROTOCOL CALCULATIONS FOR HYDROGEN CHLORIDE—Continued

	HCl
DL (ppm-meters)/K	0.1117
AU	0.2
CL (DL × AU)	0.02234
FL (cm^{-1})	2679.83
FU (cm^{-1})	2840.93
FC (cm^{-1})	2760.38
AAI (ppm-meters)/K	0.06435
RMSD	2.28E–03
MAU (ppm-meters)/K	1.28E–01
MAU ppm at 22 meters and 250 °F	.0.2284

2.0 *Summary of Method*

2.1 *Principle*

See Method 320 of this appendix. HCl can also undergo rotation transitions by absorbing energy in the far-infrared spectral region. The rotational transitions are superimposed on the vibrational fundamental to give a series of lines centered at the fundamental vibrational frequency, 2885 cm^{-1}. The frequencies of absorbance and the pattern of rotational/vibrational lines are unique to HCl. When this distinct pattern is observed in an infrared spectrum of an unknown sample, it unequivocally identifies HCl as a component of the mixture. The infrared spectrum of HCl is very distinctive and cannot be confused with the spectrum of any other compound. See Reference 6.

2.2 *Sampling and Analysis.* See Method 320 of this appendix.

2.3 *Operator Requirements.* The analyst must have knowledge of spectral patterns to choose an appropriate absorption path length or determine if sample dilution is necessary. The analyst should also understand FTIR instrument operation well enough to choose instrument settings that are consistent with the objectives of the analysis.

3.0 *Definitions*

See appendix A of the FTIR Protocol.

4.0 *Interferences*

This method will not measure HCl under conditions: (1) where the sample gas stream can condense in the sampling system or the instrumentation, or (2) where a high moisture content sample relative to the analyte concentrations imparts spectral interference due to the water vapor absorbance bands. For measuring HCl the first (sampling) consideration is more critical. Spectral interference from water vapor is not a significant problem except at very high moisture levels and low HCl concentrations.

4.1 *Analytical Interferences.* See Method 320 of this appendix.

4.1.1 *Background Interferences.* See Method 320 of this appendix.

4.1.2 *Spectral interferences.* Water vapor can present spectral interference for FTIR gas analysis of HCl. Therefore, the water vapor in the spectra of kiln gas samples must be accounted for. This means preparing at least one spectrum of a water vapor sample where the moisture concentration is close to that in the kiln gas.

4.2 *Sampling System Interferences.* The principal sampling system interferant for measuring HCl is water vapor. Steps must be taken to ensure that no condensation forms anywhere in the probe assembly, sample lines, or analytical instrumentation. Cold spots anywhere in the sampling system must be avoided. The extent of sampling system bias in the FTIR analysis of HCl depends on concentrations of potential interferants, moisture content of the gas stream, temperature of the gas stream, temperature of sampling system components, sample flow rate, and reactivity of HCl with other species in the gas stream (e.g., ammonia). For measuring HCl in a wet gas stream the temperatures of the gas stream, sampling components, and the sample flow rate are of primary importance. Analyte spiking with HCl is performed to demonstrate the integrity of the sampling system for transporting HCl vapor in the flue gas to the FTIR instrument. See section 9 of this method for a complete description of analyte spiking.

5.0 *Safety*

5.1 Hydrogen chloride vapor is corrosive and can cause irritation or severe damage to respiratory system, eyes and skin. Exposure to this compound should be avoided.

5.2 This method may involve sampling at locations having high positive or negative pressures, or high concentrations of hazardous or toxic pollutants, and can not address all safety problems encountered under these diverse sampling conditions. It is the responsibility of the tester(s) to ensure proper safety and health practices, and to determine the applicability of regulatory limitations before performing this test method. Leak-check procedures are outlined in section 8.2 of Method 320 of this appendix.

6.0 *Equipment and Supplies*

Note: Mention of trade names or specific products does not constitute endorsement by the Environmental Protection Agency.

6.1 *FTIR Spectrometer and Detector.* An FTIR Spectrometer system (interferometer, transfer optics, gas cell and detector) having the capability of measuring HCl to the predetermined minimum detectable level required (see section 4.1.3 of the FTIR Protocol). The system must also include an accurate means to control and/or measure the temperature of the FTIR gas analysis cell, and a personal computer with compatible software that provides real-time updates of the spectral profile during sample and spectral collection.

6.2 *Pump.* Capable of evacuating the FTIR cell volume to 1 Torr (133.3 Pascals) within two minutes (for batch sample analysis).

6.3 *Mass Flow Meters/Controllers.* To accurately measure analyte spike flow rate, having the appropriate calibrated range and a stated accuracy of ±2 percent of the absolute measurement value. This device must be calibrated with the major component of the calibration/spike gas (e.g., nitrogen) using an NIST traceable bubble meter or equivalent. Single point calibration checks should be performed daily in the field. When spiking HCl, the mass flow meter/controller should be thoroughly purged before and after introduction of the gas to prevent corrosion of the interior parts.

6.4 *Polytetrafluoroethane tubing.* Diameter and length suitable to connect cylinder regulators.

6.5 *Stainless Steel tubing.* Type 316 of appropriate length and diameter for heated connections.

6.6 *Gas Regulators.* Purgeable HCl regulator.

6.7 *Pressure Gauge.* Capable of measuring pressure from 0 to 1000 Torr (133.3 Pa=1 Torr) within ±5 percent.

6.8 *Sampling Probe.* Glass, stainless steel or other appropriate material of sufficient length and physical integrity to sustain heating, prevent adsorption of analytes and capable of reaching gas sampling point.

6.9 *Sampling Line.* Heated 180 °C (360 °F) and fabricated of either stainless steel, polytetrafluoroethane or other material that prevents adsorption of HCl and transports effluent to analytical instrumentation. The extractive sample line must have the capability to transport sample gas to the analytical components as well as direct heated calibration spike gas to the calibration assembly located at the sample probe. It is important to minimize the length of heated sample line.

6.10 *Particulate Filters.* A sintered stainless steel filter rated at 20 microns or greater may be placed at the inlet of the probe (for removal of large particulate matter). A heated filter (Balston® or equivalent) rated at 1 micron is necessary for primary particulate matter removal, and shall be placed immediately after the heated probe. The filter/filter holder temperature should be maintained at 180 °C (360 °F).

6.11 *Calibration/Analyte Spike Assembly.* A heated three-way valve assembly (or equivalent) to introduce surrogate spikes into the sampling system at the outlet of the probe before the primary particulate filter.

6.12 *Sample Extraction Pump.* A leak-free heated head pump (KNF® Neuberger or equivalent) capable of extracting sample effluent through entire sampling system at a rate which prevents analyte losses and minimizes analyzer response time. The pump should have a heated by-pass and may be placed either before the FTIR instrument or after. If the sample pump is located upstream of the FTIR instrument, it must be fabricated from materials non-reactive to HCl. The sampling system and FTIR measurement system shall allow the operator to obtain at least six sample spectra during a one-hour period.

6.13 *Barometer.* For measurement of barometric pressure.

6.14 *Gas Sample Manifold.* A distribution manifold having the capabilities listed in sections 6.14.1 through 6.14.4;

6.14.1 Delivery of calibration gas directly to the analytical instrumentation;

6.14.2 Delivery of calibration gas to the sample probe (system calibration or analyte spike) via a heated traced sample line;

6.14.3 Delivery of sample gas (kiln gas, spiked kiln gas, or system calibrations) to the analytical instrumentation;

6.14.4 Delivery (optional) of a humidified nitrogen sample stream.

6.15 *Flow Measurement Device.* Type S Pitot tube (or equivalent) and Magnahelic® set for measurement of volumetric flow rate.

7.0 *Reagents and Standards*

HCl can be purchased in a standard compressed gas cylinder. The most stable HCl cylinder mixture available has a concentration certified at ±5 percent. Such a cylinder is suitable for performing analyte spiking because it will provide reproducible samples. The stability of the cylinder can be monitored over time by periodically performing direct FTIR analysis of cylinder samples. It is recommended that a 10–50 ppm cylinder of HCl be prepared having from 2–5 ppm SF6 as a tracer compound. (See sections 7.1 through 7.3 of Method 320 of this appendix for a complete description of the use of existing HCl reference spectra. See section 9.1 of Method 320 of this appendix for a complete discussion of standard concentration selection.)

8.0 *Sample Collection, Preservation and Storage*

See also Method 320 of this appendix.

8.1 *Pretest.* A screening test is ideal for obtaining proper data that can be used for preparing analytical program files. Information from literature surveys and source personnel is also acceptable. Information about the sampling location and gas stream composition is required to determine the optimum sampling system configuration for measuring HCl. Determine the percent moisture of the kiln gas by Method 4 of appendix A to part 60 of this chapter or by performing a wet bulb/dry bulb measurement. Perform a preliminary traverse

of the sample duct or stack and select the sampling point(s). Acquire an initial spectrum and determine the optimum operational pathlength of the instrument.

8.2 *Leak-Check.* See Method 320 of this appendix, section 8.2 for direction on performing leak-checks.

8.3 *Background Spectrum.* See Method 320 of this appendix, section 8.5 for direction in background spectral acquisition.

8.4 *Pre-Test Calibration Transfer Standard (Direct Instrument Calibration).* See Method 320 of this appendix, section 8.3 for direction in CTS spectral acquisition.

8.5 *Pre-Test System Calibration.* See Method 320 of this appendix, sections 8.6.1 through 8.6.2 for direction in performing system calibration.

8.6 *Sampling*

8.6.1 *Extractive System.* An extractive system maintained at 180 °C (360 °F) or higher which is capable of directing a total flow of at least 12 L/min to the sample cell is required (References 1 and 2). Insert the probe into the duct or stack at a point representing the average volumetric flow rate and 25 percent of the cross sectional area. Co-locate an appropriate flow monitoring device with the sample probe so that the flow rate is recorded at specified time intervals during emission testing (e.g., differential pressure measurements taken every 10 minutes during each run).

8.6.2 *Batch Samples.* Evacuate the absorbance cell to 5 Torr (or less) absolute pressure before taking first sample. Fill the cell with kiln gas to ambient pressure and record the infrared spectrum, then evacuate the cell until there is no further evidence of infrared absorption. Repeat this procedure, collecting a total of six separate sample spectra within a 1-hour period.

8.6.3 *Continuous Flow Through Sampling.* Purge the FTIR cell with kiln gas for a time period sufficient to equilibrate the entire sampling system and FTIR gas cell. The time required is a function of the mechanical response time of the system (determined by performing the system calibration with the CTS gas or equivalent), and by the chemical reactivity of the target analytes. If the effluent target analyte concentration is not variable, observation of the spectral up-date of the flowing gas sample should be performed until equilibration of the sample is achieved. Isolate the gas cell from the sample flow by directing the purge flow to vent. Record the spectrum and pressure of the sample gas. After spectral acquisition, allow the sample gas to purge the cell with at least three volumes of kiln gas. The time required to adequately purge the cell with the required volume of gas is a function of (1) cell volume, (2) flow rate through the cell, and (3) cell design. It is important that the gas introduction and vent for the FTIR cell provides a complete purge through the cell.

8.6.4 *Continuous Sampling.* In some cases it is possible to collect spectra continuously while the FTIR cell is purged with sample gas. The sample integration time, t_{ss}, the sample flow rate through the gas cell, and the sample integration time must be chosen so that the collected data consist of at least 10 spectra with each spectrum being of a separate cell volume of flue gas. Sampling in this manner may only be performed if the native source analyte concentrations do not affect the test results.

8.7 *Sample Conditioning*

8.7.1 *High Moisture Sampling.* Kiln gas emitted from wet process cement kilns may contain 3- to 40 percent moisture. Zinc selenide windows or the equivalent should be used when attempting to analyze hot/wet kiln gas under these conditions to prevent dissolution of water soluble window materials (e.g., KBr).

8.7.2 *Sample Dilution.* The sample may be diluted using an in-stack dilution probe, or an external dilution device provided that the sample is not diluted below the instrument's quantification range. As an alternative to using a dilution probe, nitrogen may be dynamically spiked into the effluent stream in the same manner as analyte spiking. A constant dilution rate shall be maintained throughout the measurement process. It is critical to measure and verify the exact dilution ratio when using a dilution probe or the nitrogen spiking approach. Calibrating the system with a calibration gas containing an appropriate tracer compound will allow determination of the dilution ratio for most measurement systems. The tester shall specify the procedures used to determine the dilution ratio, and include these calibration results in the report.

8.8 *Sampling QA, Data Storage and Reporting.* See the FTIR Protocol. Sample integration times shall be sufficient to achieve the required signal-to-noise ratio, and all sample spectra should have unique file names. Two copies of sample interferograms and processed spectra will be stored on separate computer media. For each sample spectrum the analyst must document the sampling conditions, the sampling time (while the cell was being filled), the time the spectrum was recorded, the instrumental conditions (path length, temperature, pressure, resolution, integration time), and the spectral file name. A hard copy of these data must be maintained until the test results are accepted.

8.9 *Signal Transmittance.* Monitor the signal transmittance through the instrumental system. If signal transmittance (relative to the background) drops below 95 percent in any spectral region where the sample does not absorb infrared energy, then a new background spectrum must be obtained.

8.10 *Post-test CTS.* After the sampling run completion, record the CTS spectrum. Analysis of the spectral band area used for quantification from pre- and post-test CTS spectra should agree to within ±5 percent or corrective action must be taken.

8.11 *Post-test QA.* The sample spectra shall be inspected immediately after the run to verify that the gas matrix composition was close to the assumed gas matrix, (this is necessary to account for the concentrations of the interferants for use in the analytical analysis programs), and to confirm that the sampling and instrumental parameters were appropriate for the conditions encountered.

9.0 *Quality Control*

Use analyte spiking to verify the effectiveness of the sampling system for the target compounds in the actual kiln gas matrix. QA spiking shall be performed before and after each sample run. QA spiking shall be performed after the pre- and post-test CTS direct and system calibrations. The system biases calculated from the pre- and post-test dynamic analyte spiking shall be within ±30 percent for the spiked surrogate analytes for the measurements to be considered valid. See sections 9.3.1 through 9.3.2 for the requisite calculations. Measurement of the undiluted spike (direct-to-cell measurement) involves sending dry, spike gas to the FTIR cell, filling the cell to 1 atmosphere and obtaining the spectrum of this sample. The direct-to-cell measurement should be performed before each analyte spike so that the recovery of the dynamically spiked analytes may be calculated. Analyte spiking is only effective for assessing the integrity of the sampling system when the concentration of HCl in the source does not vary substantially. Any attempt to quantify an analyte recovery in a variable concentration matrix will result in errors in the expected concentration of the spiked sample. If the kiln gas target analyte concentrations vary by more than ±5 percent (or 5 ppm, whichever is greater) in the time required to acquire a sample spectrum, it may be necessary to: (1) Use a dual sample probe approach, (2) use two independent FTIR measurement systems, (3) use alternate QA/QC procedures, or (4) postpone testing until stable emission concentrations are achieved. (See section 9.2.3 of this method). It is recommended that a laboratory evaluation be performed before attempting to employ this method under actual field conditions. The laboratory evaluation shall include (1) performance of all applicable calculations in section 4 of the FTIR Protocol; (2) simulated analyte spiking experiments in dry (ambient) and humidified sample matrices using HCl; and (3) performance of bias (recovery) calculations from analyte spiking experiments. It is not necessary to perform a laboratory evaluation before every field test. The purpose of the laboratory study is to demonstrate that the actual instrument and sampling system configuration used in field testing meets the requirements set forth in this method.

9.1 *Spike Materials.* Perform analyte spiking with an HCl standard to demonstrate the integrity of the sampling system.

9.1.1 An HCl standard of approximately 50 ppm in a balance of ultra pure nitrogen is recommended. The SF_6 (tracer) concentration shall be 2 to 5 ppm depending upon the measurement pathlength. The spike ratio (spike flow/total flow) shall be no greater than 1:10, and an ideal spike concentration should approximate the native effluent concentration.

9.1.2 The ideal spike concentration may not be achieved because the target concentration cannot be accurately predicted prior to the field test, and limited calibration standards will be available during testing. Therefore, practical constraints must be applied that allow the tester to spike at an anticipated concentration. For these tests, the analyte concentration contributed by the HCl standard spike should be 1 to 5 ppm or should more closely approximate the native concentration if it is greater.

9.2 *Spike Procedure*

9.2.1 A spiking/sampling apparatus is shown in Figure 2. Introduce the spike/tracer gas mixture at a constant flow (±2 percent) rate at approximately 10 percent of the total sample flow. (For example, introduce the surrogate spike at 1 L/min 20 cc/min, into a total sample flow rate of 10 L/min). The spike must be pre-heated before introduction into the sample matrix to prevent a localized condensation of the gas stream at the spike introduction point. A heated sample transport line(s) containing multiple transport tubes within the heated bundle may be used to spike gas up through the sampling system to the spike introduction point. Use a calibrated flow device (e.g., mass flow meter/controller), to monitor the spike flow as indicated by a calibrated flow meter or controller, or alternately, the SF_6 tracer ratio may be calculated from the direct measurement and the diluted measurement. It is often desirable to use the tracer approach in calculating the spike/total flow ratio because of the difficulty in accurately measuring hot/wet total flow. The tracer technique has been successfully used in past validation efforts (Reference 1).

9.2.2 Perform a direct-to-cell measurement of the dry, undiluted spike gas. Introduce the spike directly to the FTIR cell, bypassing the sampling system. Fill cell to 1 atmosphere and collect the spectrum of this sample. Ensure that the spike gas has equilibrated to the temperature of the measurement cell before acquisition of the spectra. Inspect the spectrum and verify that the gas is dry and contains negligible CO_2. Repeat the process to obtain a second direct-to-cell measurement. Analysis of spectral band areas for HCl from these duplicate measurements should agree to within ±5 percent of the mean.

9.2.3 *Analyte Spiking.* Determine whether the kiln gas contains native concentrations of HCl by examination of preliminary spectra. Determine whether the concentration varies significantly with time by observing a continuously up-dated spectrum of sample gas in the flow-through sampling mode. If the concentration varies by more than ±5 percent during the period of time required to acquire a spectra, then an alternate approach should be used. One alternate approach uses two sampling lines to convey sample to the gas distribution manifold. One of the sample lines is used to continuously extract unspiked kiln gas from the source. The other sample line serves as the analyte spike line. One FTIR system can be used in this arrangement. Spiked or unspiked sample gas may be directed to the FTIR system from the gas distribution manifold, with the need to purge only the components between the manifold and the FTIR system. This approach minimizes the time required to acquire an equilibrated sample of spiked or unspiked kiln gas. If the source varies by more than ±5 percent (or 5 ppm, whichever is greater) in the time it takes to switch from the unspiked sample line to the spiked sample line, then analyte spiking may not be a feasible means to determine the effectiveness of the sampling system for the HCl in the sample matrix. A second alternative is to use two completely independent FTIR measurement systems. One system would measure unspiked samples while the other system would measure the spiked samples. As a last option, (where no other alternatives can be used) a humidified nitrogen stream may be generated in the field which approximates the moisture content of the kiln gas. Analyte spiking into this humidified stream can be employed to assure that the sampling system is adequate for transporting the HCl to the FTIR instrumentation.

9.2.3.1 Adjust the spike flow rate to approximately 10 percent of the total flow by metering spike gas through a calibrated mass flowmeter or controller. Allow spike flow to equilibrate within the sampling system before analyzing the first spiked kiln gas samples. A minimum of two consecutive spikes are required. Analysis of the spectral band area used for quantification should agree to within ±5 percent or corrective action must be taken.

9.2.3.2 After QA spiking is completed, the sampling system components shall be purged with nitrogen or dry air to eliminate traces of the HCl compound from the sampling system components. Acquire a sample spectra of the nitrogen purge to verify the absence of the calibration mixture.

9.2.3.3 Analyte spiking procedures must be carefully executed to ensure that meaningful measurements are achieved. The requirements of sections 9.2.3.3.1 through 9.2.3.3.4 shall be met.

9.2.3.3.1 The spike must be in the vapor phase, dry, and heated to (or above) the kiln gas temperature before it is introduced to the kiln gas stream.

9.2.3.3.2 The spike flow rate must be constant and accurately measured.

9.2.3.3.3 The total flow must also be measured continuously and reliably or the dilution ratio must otherwise be verified before and after a run by introducing a spike of a non-reactive, stable compound (i.e., tracer).

9.2.3.3.4 The tracer must be inert to the sampling system components, not contained in the effluent gas, and readily detected by the analytical instrumentation. Sulfur hexafluoride (SF_6) has been used successfully (References 1 and 2) for this purpose.

9.3 *Calculations*

9.3.1 *Recovery.* Calculate the percent recovery of the spiked analytes using equations 1 and 2.

$$\%R = 100 \times \frac{S_m - S_u(1 - DF)}{DF \times C_s} \qquad (1)$$

S_m = Mean concentration of the analyte spiked effluent samples (observed).

$$C_e = DF \times C_s + S_u(1 - DF) \qquad (2)$$

C_e = Expected concentration of the spiked samples (theoretical).
D_f = dilution Factor (Total flow/Spike flow). total flow = spike flow plus effluent flow.
C_s = cylinder concentration of spike gas.
S_u = native concentration of analytes in unspiked samples.

The spike dilution factor may be confirmed by measuring the total flow and the spike flow directly. Alternately, the spike dilution can be verified by comparing the concentration of the tracer compound in the spiked samples (diluted) to the tracer concentration in the direct (undiluted) measurement of the spike gas.
If SF_6 is the tracer gas, then

$$D_f = [SF_6]_{spike} / [SF_6]_{direct} \qquad (3)$$

$[SF_6]_{spike}$ = the diluted SF_6 concentration measured in a spiked sample.
$[SF_6]_{direct}$ = the SF_6 concentration measured directly.

9.3.2 Bias. The bias may be determined by the difference between the observed spike value and the expected response (i.e., the equivalent concentration of the spiked material plus the analyte concentration adjusted for spike dilution). Bias is defined by section 6.3.1 of EPA Method 301 of this appendix (Reference 8) as,

$$B = S_m - C_e \qquad (4)$$

Where:
B = Bias at spike level.
S_m = Mean concentration of the analyte spiked samples.
C_e = Expected concentration of the analyte in spiked samples.

Acceptable recoveries for analyte spiking are ±30 percent. Application of correction factors to the data based upon bias and recovery calculations is subject to the approval of the Administrator.

10.0 *Calibration and Standardization*

10.1 *Calibration transfer standards (CTS).* The EPA Traceability Protocol gases or NIST traceable standards, with a minimum accuracy of ±2 percent shall be used. For other requirements of the CTS, see the FTIR Protocol section 4.5.

10.2 *Signal-to-Noise Ratio (S/N).* The S/N shall be less than the minimum acceptable measurement uncertainty in the analytical regions to be used for measuring HCl.

10.3 *Absorbance Pathlength.* Verify the absorbance path length by comparing CTS spectra to reference spectra of the calibration gas(es).

10.4 *Instrument Resolution.* Measure the line width of appropriate CTS band(s) to verify instrumental resolution.

10.5 *Apodization Function.* Choose the appropriate apodization function. Determine any appropriate mathematical transformations that are required to correct instrumental errors by measuring the CTS. Any mathematical transformations must be documented and reproducible. Reference 9 provides additional information about FTIR instrumentation.

11.0 *Analytical Procedure*

A full description of the analytical procedures is given in sections 4.6–4.11, sections 5, 6, and 7, and the appendices of the FTIR Protocol. Additional description of quantitative spectral analysis is provided in References 10 and 11.

12.0 *Data Analysis and Calculations*

Data analysis is performed using appropriate reference spectra whose concentrations can be verified using CTS spectra. Various analytical programs (References 10 and 11) are available to relate sample absorbance to a concentration standard. Calculated concentrations should be verified by analyzing spectral baselines after mathematically subtracting scaled reference spectra from the sample spectra. A full description of the data analysis and calculations may be found in the FTIR Protocol (sections 4.0, 5.0, 6.0 and appendices).

12.1 Calculated concentrations in sample spectra are corrected for differences in absorption pathlength between the reference and sample spectra by

$$C_{corr} = (L_r/L_s) \times (T_s/T_r) \times (C_{calc}) \qquad (5)$$

Where:

C_{corr} = The pathlength corrected concentration.

C_{calc} = The initial calculated concentration (output of the multicomponent analysis program designed for the compound).

L_r = The pathlength associated with the reference spectra.

L_s = The pathlength associated with the sample spectra.

T_s = The absolute temperature (K) of the sample gas.

T_r = The absolute temperature (K) at which reference spectra were recorded.

12.2 The temperature correction in equation 5 is a volumetric correction. It does not account for temperature dependence of rotational-vibrational relative line intensities. Whenever possible, the reference spectra used in the analysis should be collected at a temperature near the temperature of the FTIR cell used in the test to minimize the calculated error in the measurement (FTIR Protocol, appendix D). Additionally, the analytical region chosen for the analysis should be sufficiently broad to minimize errors caused by small differences in relative line intensities between reference spectra and the sample spectra.

13.0 *Method Performance*

A description of the method performance may be found in the FTIR Protocol. This method is self validating provided the results meet the performance specification of the QA spike in sections 9.0 through 9.3 of this method.

14.0 *Pollution Prevention*

This is a gas phase measurement. Gas is extracted from the source, analyzed by the instrumentation, and discharged through the instrument vent.

15.0 *Waste Management*

Gas standards of HCl are handled according to the instructions enclosed with the material safety data sheet.

16.0 *References*

1. ''Laboratory and Field Evaluation of a Methodology for Determination of Hydrogen Chloride Emissions From Municipal and Hazardous Waste Incinerators,'' S.C. Steinsberger and J.H. Margeson. Prepared for U.S. Environmental Protection Agency, Research Triangle Park, NC. NTIS Report No. PB89–220586. (1989).

2. ''Evaluation of HCl Measurement Techniques at Municipal and Hazardous Waste Incinerators,'' S.A. Shanklin, S.C. Steinsberger, and L. Cone, Entropy, Inc. Prepared for U.S. Environmental Protection Agency, Research Triangle Park, NC. NTIS Report No. PB90–221896. (1989).

3. ''Fourier Transform Infrared (FTIR) Method Validation at a Coal Fired-Boiler,'' Entropy, Inc. Prepared for U.S. Environmental Protection Agency, Research Triangle Park, NC. EPA Publication No. EPA–454/R95–004. NTIS Report No. PB95–193199. (1993).

4. ''Field Validation Test Using Fourier Transform Infrared (FTIR) Spectrometry To Measure Formaldehyde, Phenol and Methanol at a Wool Fiberglass Production Facility.'' Draft. U.S. Environmental Protection Agency Report, Entropy, Inc., EPA Contract No. 68D20163, Work Assignment I–32.

5. Kinner, L.L., Geyer, T.G., Plummer, G.W., Dunder, T.A., Entropy, Inc. ''Application of FTIR as a Continuous Emission Monitoring System.'' Presentation at 1994 International Incineration Conference, Houston, TX. May 10, 1994.

6. ''Molecular Vibrations; The Theory of Infrared and Raman Vibrational Spectra,'' E. Bright Wilson, J.C. Decius, and P.C. Cross, Dover Publications, Inc., 1980. For a less intensive treatment of molecular rotational-vibrational spectra see, for example, ''Physical Chemistry,'' G.M. Barrow, chapters 12, 13, and 14, McGraw Hill, Inc., 1979.

7. ''Laboratory and Field Evaluations of Ammonium Chloride Interference in Method 26,'' U.S. Environmental Protection Agency Report, Entropy, Inc., EPA Contract No. 68D20163, Work Assignment No. I–45.

8. 40 CFR 63, appendix A. Method 301—Field Validation of Pollutant Measurement Methods from Various Waste Media.

9. ''Fourier Transform Infrared Spectrometry,'' Peter R. Griffiths and James de Haseth, Chemical Analysis, 83, 16–25, (1986), P.J. Elving, J.D. Winefordner and I.M. Kolthoff (ed.), John Wiley and Sons.

10. ''Computer-Assisted Quantitative Infrared Spectroscopy,'' Gregory L. McClure (ed.), ASTM Special Publication 934 (ASTM), 1987.

11. ''Multivariate Least-Squares Methods Applied to the Quantitative Spectral Analysis of Multicomponent Mixtures,'' Applied Spectroscopy, 39(10), 73–84, 1985.

BILLING CODE 6560–50–P

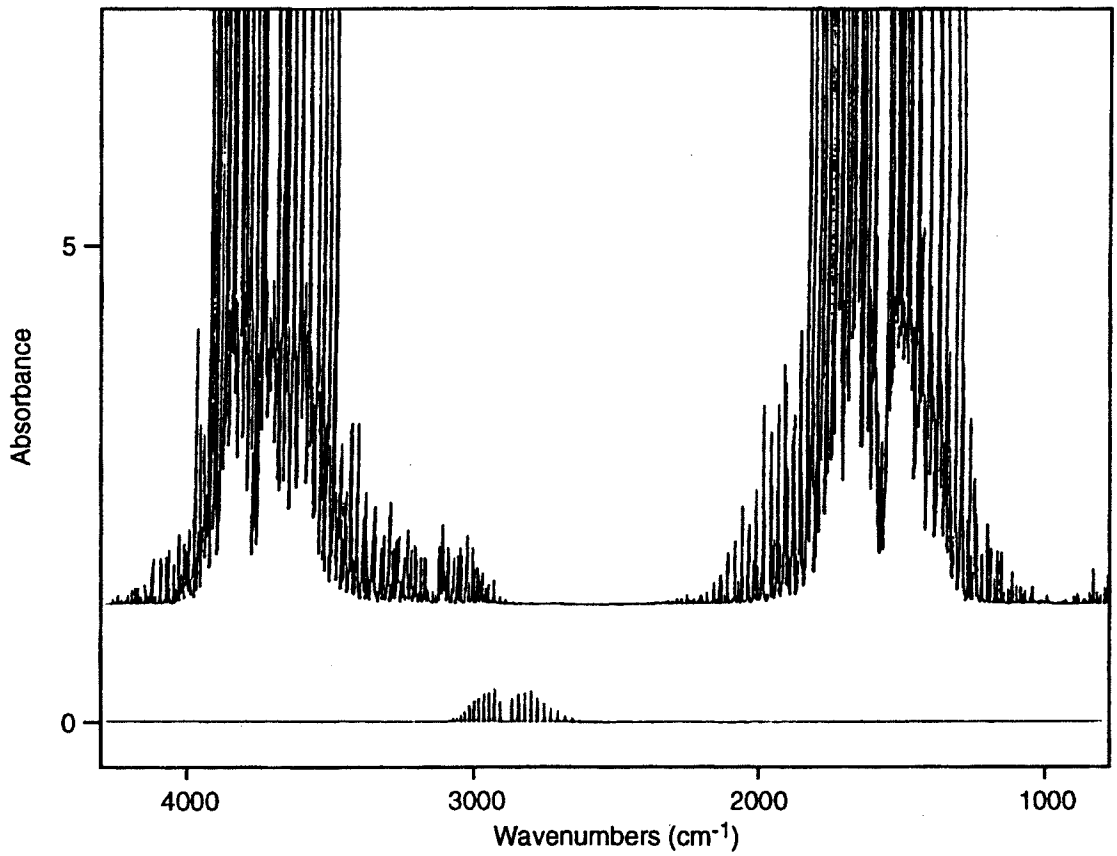

Top, water vapor (194hsub); Bottom, HCl at 11.4 (ppm-M)/K.

Figure 1. FTIR Spectra of HCl and Water.

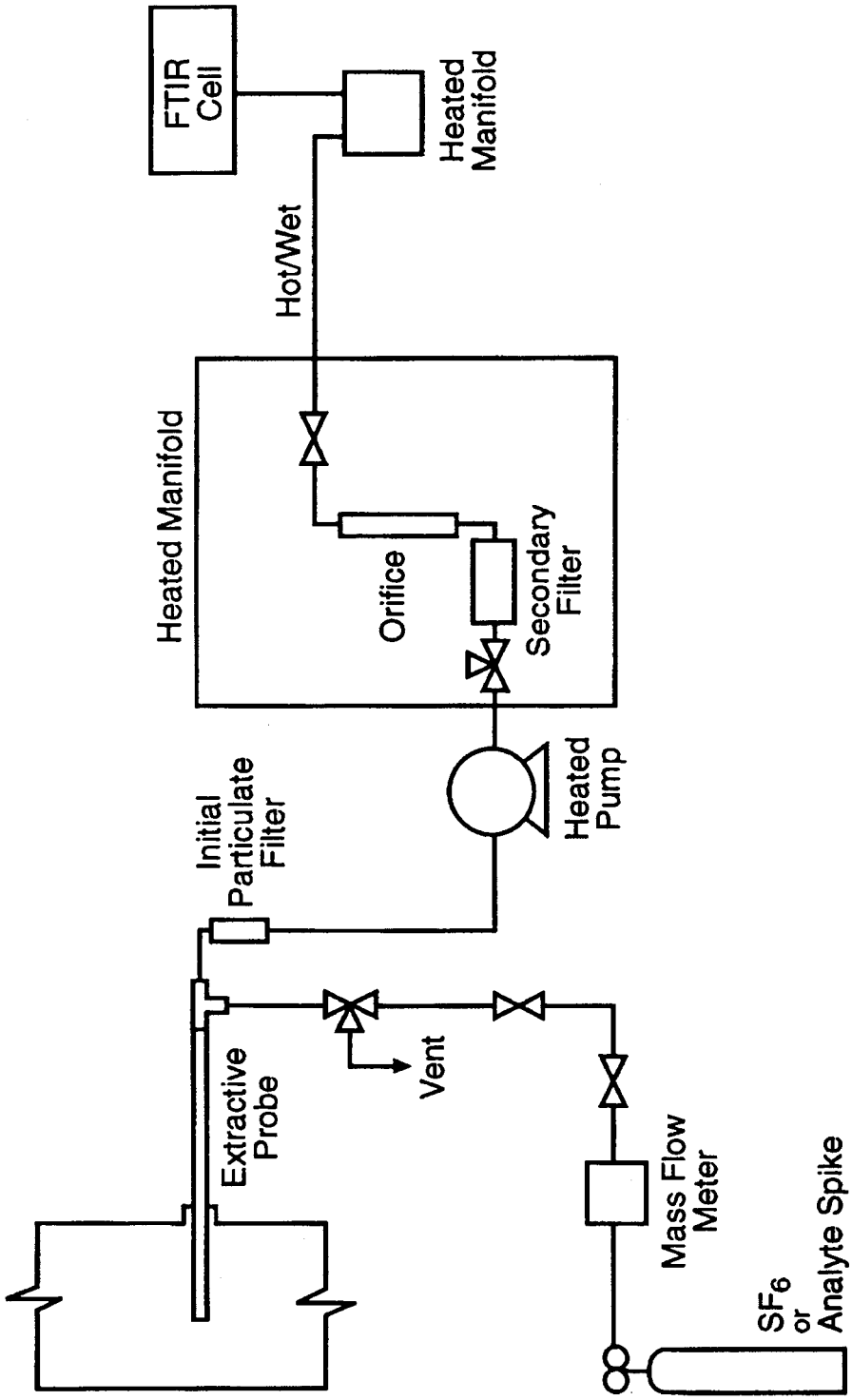

Figure 2. FTIR Sampling/Spiking System.

[FR Doc. 99–12893 Filed 6–11–99; 8:45 am]
BILLING CODE 6560–50–C

Reader Aids

Federal Register

Vol. 64, No. 113

Monday, June 14, 1999

CUSTOMER SERVICE AND INFORMATION

Federal Register/Code of Federal Regulations

General Information, indexes and other finding aids	**202–523–5227**
Laws	**523–5227**
Presidential Documents	
Executive orders and proclamations	**523–5227**
The United States Government Manual	**523–5227**
Other Services	
Electronic and on-line services (voice)	**523–4534**
Privacy Act Compilation	**523–3187**
Public Laws Update Service (numbers, dates, etc.)	**523–6641**
TTY for the deaf-and-hard-of-hearing	**523–5229**

ELECTRONIC RESEARCH

World Wide Web

Full text of the daily Federal Register, CFR and other publications:

http://www.access.gpo.gov/nara

Federal Register information and research tools, including Public Inspection List, indexes, and links to GPO Access:

http://www.nara.gov/fedreg

E-mail

PENS (Public Law Electronic Notification Service) is an E-mail service that delivers information about recently enacted Public Laws. To subscribe, send E-mail to

listproc@lucky.fed.gov

with the text message:

subscribe publaws-l <firstname> <lastname>

Use listproc@lucky.fed.gov only to subscribe or unsubscribe to PENS. We cannot respond to specific inquiries at that address.

Reference questions. Send questions and comments about the Federal Register system to:

info@fedreg.nara.gov

The Federal Register staff cannot interpret specific documents or regulations.

FEDERAL REGISTER PAGES AND DATES, JUNE

29207–29536 1
29537–29776 2
29777–29944 3
29945–30212 4
30213–30378 7
30379–30860 8
30861–31104 9
31105–31484 10
31485–31686 11
31687–31962 14

CFR PARTS AFFECTED DURING JUNE

At the end of each month, the Office of the Federal Register publishes separately a List of CFR Sections Affected (LSA), which lists parts and sections affected by documents published since the revision date of each title.

3 CFR

Proclamations:
7103 (See Proc. 7202) 29773
7201 29769
7202 29773

Executive Orders:
12759 (revoked by EO 13123) 30851
12845 (revoked by EO 13123) 30851
12902 (revoked by EO 13123) 30851
13123 30851
13124 31103
13125 31105

Administrative Orders:
Memorandums:
May 26, 1999 29539
Presidential Determinations:
No. 99–25 of May 24, 1999 29537
No. 99–26 of May 24, 1999 31109
No. 99–27 of May 24, 1999 31111
No. 99–28 of May 24, 1999 31113

5 CFR

213 31485
353 31485
870 31485
890 31485
1620 31052
1650 31052
1651 31052
1690 31052
2430 30861

Proposed Rules:
630 31735

7 CFR

37 30861
301 .....29207, 29541, 30213
407 30214
930 30229
989 30233
1205 30236
1780 29945

Proposed Rules:
301 30250
319 31512
916 30252
917 30252
981 31153
1065 30256
1216 31736
1230 31158

8 CFR

214 .....29208, 30103

9 CFR

91 29947

Proposed Rules:
3 30257
317 29702
318 29602
381 29602

10 CFR

2 .....29212, 29213
170 31448
171 31448
1703 31115

Proposed Rules:
2 29246
50 31737
850 29811

11 CFR

Proposed Rules:
110 31159

12 CFR

4 29214
331 30869
902 30880
903 30880

Proposed Rules:
1 31749
5 31749
7 31749
24 31160
1750 31756

13 CFR

Proposed Rules:
121 29813

14 CFR

39 .....29777, 29788, 29781, 29783, 30379, 30382, 31488, 31490, 31491, 31687, 31689
71 .....29785, 30241, 30888, 31115, 31116, 31117, 31118, 31119, 31120
95 30890
97 .....30892, 30895, 30896
401 29786
411 29786
413 29786
415 29786
417 29786

Proposed Rules:
23 29247
39 .....29602, 29607, 29814, 29965, 29966, 29969, 29972, 31518, 31520, 31523, 31687, 31689
71 .....29817, 30259, 30260, 30261, 30928, 31525, 31526, 31527
108 31686

15 CFR

774 30103

Proposed Rules:

922 ..... 30929, 31528

16 CFR

245 30898

Proposed Rules:

23 30448

17 CFR

5 ..... 29217, 30384
10 30902
30 30103
240 ..... 29550, 31493

Proposed Rules:

240 29608

18 CFR

385 31493

Proposed Rules:

35 31390
385 29614

19 CFR

Proposed Rules:

4 29975
159 29975
351 29818

20 CFR

404 29786

21 CFR

172 29949
173 29224
175 29553
178 30386
520 ..... 30386, 31497
556 31497

Proposed Rules:

884 31164

23 CFR

180 29742

Proposed Rules:

668 30263

24 CFR

203 29758

Proposed Rules:

Ch. IX 30450
990 30451

25 CFR

Proposed Rules:

151 30929

26 CFR

1 29788

Proposed Rules:

1 31770
301 31529

29 CFR

2704 31895

Proposed Rules:

2510 30452

30 CFR

Ch. II 30267
914 31691
938 30387

Proposed Rules:

917 29247
943 29249

32 CFR

171 29227
706 31037

Proposed Rules:

884 29252

33 CFR

100 ..... 30388, 30389, 30390
110 29554
117 ..... 29558, 29559, 29561, 30390
162 29554
165 ..... 29554, 29561, 30242, 30243
169 ..... 29229, 31037

Proposed Rules:

100 30273
165 30274

34 CFR

5b 31066

Proposed Rules:

99 29532

36 CFR

Proposed Rules:

1228 30276

37 CFR

201 29518
202 ..... 29518, 29522
203 29518
204 29518
211 29518

38 CFR

Ch. I 30244
3 ..... 30244, 30391, 30392
4 30392
21 31693

39 CFR

111 31121

Proposed Rules:

265 30929

40 CFR

9 ..... 29490, 31358, 31693
52 ..... 29235, 29563, 29567, 29570, 29573, 29790, 29793, 29958, 30394, 30396, 30399, 31498
62 ..... 29796, 29961
63 ..... 29420, 29490, 30194, 30406, 31358, 31695, 31895, 31898
80 30904
81 30911
82 ..... 29240, 30410
85 30415
136 30417
180 ..... 29581, 29589, 31124, 31129, 31501, 31505
185 29589
186 29589
239 30434
745 31092

Proposed Rules:

52 ..... 29255, 29615, 29616, 29821, 29976, 30276, 30453, 31168, 31529
62 ..... 29822, 29976
63 ..... 30453, 30456
80 30930
81 ..... 29822, 30937
82 31772
141 30464
176 29823
180 ..... 30939, 31040
185 30939
186 30939
239 30465
261 31170
799 31074

41 CFR

101–47 31731

42 CFR

Proposed Rules:

5 29831
51c 29831

43 CFR

Proposed Rules:

3100 29256
3110 29256
3120 29256
3130 29256
3140 29256
3150 29256
3160 29256
3170 29256
3180 29256

44 CFR

15 31136

46 CFR

8 30437
31 30437
71 30437
91 30437
107 30437
551 30245

47 CFR

0 31139
73 ..... 31140, 31141, 31142, 31143, 31511
36 30917
51 29598
54 30440
76 29598

Proposed Rules:

1 30288
20 31530
22 30288
24 30288
26 30288
27 30288
36 ..... 30949, 31780
54 31780
69 31780
73 ..... 29977, 29978, 29979, 29980, 30288, 30289, 30290, 30291, 30292, 30293, 30294, 30295, 30296, 31171, 31172, 31173, 31174, 31175, 31176, 31532
74 30288
80 30288
87 30288
90 ..... 30288, 31532
95 30288
97 30288
101 30288

48 CFR

52 30103
207 31732
209 31732
803 30442
852 30442
1537 30443
1552 30442

Proposed Rules:

808 29981
812 29981
813 29981
852 29981
853 29981
1815 30468

49 CFR

1 29601
80 29742
261 29742
640 29742

Proposed Rules:

40 29831
192 29834
195 29834
571 ..... 29616, 29617, 31533

50 CFR

20 29799
222 29805
223 29805
230 31037
285 ..... 29806, 30925
600 31895
622 30445
635 ..... 29806, 30248
648 31144
660 ..... 29808, 31895
679 ..... 29809, 30926, 30927, 31151, 31733

Proposed Rules:

17 29983
216 31806
226 29618
600 30956
622 ..... 29622, 31536
635 29984
648 ..... 29257, 30956
660 29834

REMINDERS

The items in this list were editorially compiled as an aid to Federal Register users. Inclusion or exclusion from this list has no legal significance.

RULES GOING INTO EFFECT JUNE 14, 1999

COMMERCE DEPARTMENT

National Oceanic and Atmospheric Administration

Fishery conservation and management:
- Atlantic swordfish; published 3-16-99
- West Coast States and Western Pacific fisheries—
  - West coast salmon; published 5-14-99

DEFENSE DEPARTMENT

Acquisition regulations:
- Congressional Medal of Honor; published 6-14-99
- Contract actions for leased equipment; published 6-14-99

ENERGY DEPARTMENT

Federal Energy Regulatory Commission

Natural Gas Act:
- Facilities construction and operation, etc.; filing of applications; published 5-14-99

ENVIRONMENTAL PROTECTION AGENCY

Air pollutants, hazardous; national emission standards:
- Portland cement manufacturing industry; published 6-14-99
- Wool fiberglass manufacturing; published 6-14-99

Air quality implementation plans:
- Preparation, adoption, and submittal—
  - Oxides of nitrogen emissions; State implementation plans; findings and submission requirements; published 5-14-99

Water pollution control:
- Clean Water Act—
  - Oil and grease and non-polar material; test procedure guidelines; published 5-14-99

FEDERAL COMMUNICATIONS COMMISSION

Radio stations; table of assignments:
- Various States; published 5-7-99

GENERAL SERVICES ADMINISTRATION

Federal property management:
- Utilization and disposal—
  - Real property available for disposal; appraisal; published 6-14-99

HEALTH AND HUMAN SERVICES DEPARTMENT

Children and Families Administration

Personal Responsibility and Work Opportunity Reconciliation Act of 1996; implementation:
- Temporary assistance for needy families program—
  - Out-of-wedlock childbearing decreases and abortion reduction; bonus awards to States with largest decreases in illegitimacy; published 4-14-99

INTERIOR DEPARTMENT

Surface Mining Reclamation and Enforcement Office

Permanent program and abandoned mine land reclamation plan submissions:
- Indiana; published 6-14-99

SMALL BUSINESS ADMINISTRATION

Small business size standards:
- Engineering services, architectural services, and surveying and mapping services; published 5-14-99

TRANSPORTATION DEPARTMENT

Federal Aviation Administration

Airworthiness directives:
- Pratt & Whitney; published 5-13-99

COMMENTS DUE NEXT WEEK

AGRICULTURE DEPARTMENT

Farm Service Agency

Program regulations:
- Servicing and collections—
  - Suspension of collection of recapture amount for borrowers with shared appreciation agreements; comments due by 6-22-99; published 4-23-99

AGRICULTURE DEPARTMENT

Food Safety and Inspection Service

Meat and poultry inspection:
- Soy protein concentrate, modified food starch, and carrageenan; use as binders; comments due by 6-23-99; published 5-24-99

AGRICULTURE DEPARTMENT

Rural Business-Cooperative Service

Program regulations:
- Servicing and collections—
  - Suspension of collection of recapture amount for borrowers with shared appreciation agreements; comments due by 6-22-99; published 4-23-99

AGRICULTURE DEPARTMENT

Rural Housing Service

Program regulations:
- Servicing and collections—
  - Suspension of collection of recapture amount for borrowers with shared appreciation agreements; comments due by 6-22-99; published 4-23-99

AGRICULTURE DEPARTMENT

Rural Utilities Service

Program regulations:
- Servicing and collections—
  - Suspension of collection of recapture amount for borrowers with shared appreciation agreements; comments due by 6-22-99; published 4-23-99

COMMERCE DEPARTMENT

National Oceanic and Atmospheric Administration

Fishery conservation and management:
- Atlantic highly migratory species—
  - Atlantic bluefin tuna; comments due by 6-22-99; published 6-4-99
- Caribbean, Gulf, and South Atlantic fisheries—
  - Gulf of Mexico and South Atlantic coastal migratory pelagic resources; comments due by 6-21-99; published 5-21-99
  - Gulf of Mexico and South Atlantic coastal migratory pelagic resources; comments due by 6-23-99; published 5-24-99
- Magnuson-Stevens Act provisions—
  - Domestic fisheries; experimental fishing permits; comments due by 6-24-99; published 6-9-99

Marine mammals:
- Beluga whales harvested in Cook Inlet, AK; marking and reporting by Alaskan Natives; comments due by 6-23-99; published 5-24-99

COMMERCE DEPARTMENT

Patent and Trademark Office

Trademark Law Treaty Implementation Act; implementation; comments due by 6-25-99; published 5-11-99

ENERGY DEPARTMENT

Federal Energy Regulatory Commission

Natural gas companies (Natural Gas Act):
- Landowner notification, expanded categorical exclusions, and other environmental filing requirements; comments due by 6-21-99; published 5-21-99

ENVIRONMENTAL PROTECTION AGENCY

Air quality implementation plans; approval and promulgation; various States:
- California; comments due by 6-21-99; published 6-7-99

Air quality planning purposes; designation of areas:
- Kentucky and Indiana; comments due by 6-21-99; published 5-21-99

Pesticides; tolerances in food, animal feeds, and raw agricultural commodities:
- Bentazon, etc.; comments due by 6-22-99; published 4-23-99

Superfund program:
- National oil and hazardous substances contingency plan—
  - National priorities list update; comments due by 6-22-99; published 4-23-99

Water pollution control:
- Underground injection control program; Class V injection wells
  - Class V wells; requirements for motor vehicle waste and industrial waste disposal wells and cesspools in ground-water based source petroleum areas; comments due by 6-21-99; published 5-21-99

EQUAL EMPLOYMENT OPPORTUNITY COMMISSION

Age Discrimination in Employment Act:

Rights and claims waivers; tender back of consideration; comments due by 6-22-99; published 4-23-99

FEDERAL COMMUNICATIONS COMMISSION

Common carrier services:

Satellite communications—

2 GHz band; policies and services rules establishment; comments due by 6-24-99; published 4-7-99

Radio stations; table of assignments:

Hawaii; comments due by 6-21-99; published 5-7-99

Maryland; comments due by 6-21-99; published 5-7-99

Missouri; comments due by 6-21-99; published 5-10-99

Missouri et al.; comments due by 6-21-99; published 5-7-99

Montana; comments due by 6-21-99; published 5-10-99

Texas; comments due by 6-21-99; published 5-7-99

Various States; comments due by 6-21-99; published 5-7-99

FEDERAL TRADE COMMISSION

Industry guides:

New automobiles; fuel economy advertising; comments due by 6-21-99; published 4-22-99

HEALTH AND HUMAN SERVICES DEPARTMENT

Food and Drug Administration

Food for human consumption:

Food labeling—

Ingredients declaration; comments due by 6-23-99; published 4-9-99

Radiological health:

Laser products; performance standards; comments due by 6-22-99; published 3-24-99

INTERIOR DEPARTMENT

Fish and Wildlife Service

Endangered and threatened species:

California bighorn sheep; Sierra Nevada distinct population segment; comments due by 6-21-99; published 4-20-99

Mountain plover; comments due by 6-21-99; published 4-19-99

INTERIOR DEPARTMENT

Surface Mining Reclamation and Enforcement Office

Federal and Indian lands programs:

Indian lands; definition clarification; comments due by 6-21-99; published 4-15-99

Permanent program and abandoned mine land reclamation plan submissions:

Indiana; comments due by 6-21-99; published 5-20-99

JUSTICE DEPARTMENT

Prisons Bureau

Inmate control, custody, care, etc.:

Inmate commissary account deposit procedures; comments due by 6-22-99; published 4-23-99

NATIONAL ARCHIVES AND RECORDS ADMINISTRATION

Public availability and use:

Researcher registration and research room procedures; comments due by 6-22-99; published 4-23-99

NUCLEAR REGULATORY COMMISSION

Electronic records; availability; comments due by 6-21-99; published 5-7-99

SECURITIES AND EXCHANGE COMMISSION

Freedom of Information Act, Privacy Act, and confidential treatment rules; amendments; comments due by 6-21-99; published 4-22-99

TRANSPORTATION DEPARTMENT

Coast Guard

Pollution:

Hazardous substances; tank vessel response plans; comments due by 6-21-99; published 3-22-99

TRANSPORTATION DEPARTMENT

Federal Aviation Administration

Airworthiness directives:

Bell Helicopter Textron Canada; comments due by 6-21-99; published 4-20-99

Boeing; comments due by 6-21-99; published 5-5-99

Cessna; comments due by 6-25-99; published 4-26-99

Eurocopter France; comments due by 6-22-99; published 4-23-99

Fairchild; comments due by 6-21-99; published 4-23-99

Fokker; comments due by 6-21-99; published 5-20-99

McDonnell Douglas; comments due by 6-21-99; published 4-22-99

Class D airspace; comments due by 6-21-99; published 5-4-99

Class E airspace; comments due by 6-21-99; published 5-4-99

TRANSPORTATION DEPARTMENT

Federal Railroad Administration

Railroad rehabilitation and improvement financing program; regulations governing loans and loan guarantees; comments due by 6-21-99; published 5-20-99

TRANSPORTATION DEPARTMENT

National Highway Traffic Safety Administration

Anthropomorphic test devices:

Occupant crash protection—

12-month-old infant crash test dummy; comments due by 6-22-99; published 4-22-99

Vehicles built in two stages:

Certification Negotiated Rulemaking Committee; intent to form; comments due by 6-21-99; published 5-20-99

TRANSPORTATION DEPARTMENT

Research and Special Programs Administration

Hazardous materials:

Incident reporting requirements and Detailed Hazardous Materials Incident Report form; revision; comments due by 6-21-99; published 3-23-99

Pipeline safety:

Natural gas transportation, etc.—

Gas pipelines; corrosion extent determination; comments due by 6-24-99; published 5-25-99

TREASURY DEPARTMENT

Customs Service

Vessels in foreign and domestic trades:

Foreign repairs to U.S. vessels; comments due by 6-21-99; published 4-21-99

LIST OF PUBLIC LAWS

This is a continuing list of public bills from the current session of Congress which have become Federal laws. It may be used in conjunction with ''P L U S'' (Public Laws Update Service) on 202–523–6641. This list is also available online at http://www.nara.gov/fedreg.

The text of laws is not published in the **Federal Register** but may be ordered in ''slip law'' (individual pamphlet) form from the Superintendent of Documents, U.S. Government Printing Office, Washington, DC 20402 (phone, 202–512–1808). The text will also be made available on the Internet from GPO Access at http://www.access.gpo.gov/nara/index.html. Some laws may not yet be available.

H.R. 1121/P.L. 106–33

To designate the Federal building and United States courthouse located at 18 Greenville Street in Newnan, Georgia, as the ''Lewis R. Morgan Federal Building and United States Courthouse''. (June 7, 1999; 113 Stat. 117)

H.R. 1183/P.L. 106–34

Fastener Quality Act Amendments Act of 1999 (June 8, 1999; 113 Stat. 118)

Last List June 3, 1999

Public Laws Electronic Notification Service (PENS)

PENS is a free electronic mail notification service of newly enacted public laws. To subscribe, send E-mail to **listproc@lucky.fed.gov** with the text message:

subscribe PUBLAWS-L Your Name.

Note: This service is strictly for E-mail notification of new public laws. The text of laws is not available through this service. **PENS** cannot respond to specific inquiries sent to this address.

CFR CHECKLIST

This checklist, prepared by the Office of the Federal Register, is published weekly. It is arranged in the order of CFR titles, stock numbers, prices, and revision dates.

An asterisk (*) precedes each entry that has been issued since last week and which is now available for sale at the Government Printing Office.

A checklist of current CFR volumes comprising a complete CFR set, also appears in the latest issue of the LSA (List of CFR Sections Affected), which is revised monthly.

The CFR is available free on-line through the Government Printing Office's GPO Access Service at http://www.access.gpo.gov/nara/cfr/index.html. For information about GPO Access call the GPO User Support Team at 1-888-293-6498 (toll free) or 202-512-1530.

The annual rate for subscription to all revised paper volumes is $951.00 domestic, $237.75 additional for foreign mailing.

Mail orders to the Superintendent of Documents, Attn: New Orders, P.O. Box 371954, Pittsburgh, PA 15250–7954. All orders must be accompanied by remittance (check, money order, GPO Deposit Account, VISA, Master Card, or Discover). Charge orders may be telephoned to the GPO Order Desk, Monday through Friday, at **(202) 512–1800** from 8:00 a.m. to 4:00 p.m. eastern time, or FAX your charge orders to **(202) 512-2250**.

Title	Stock Number	Price	Revision Date
1, 2 (2 Reserved)	(869–034–00001–1)	5.00	[5] Jan. 1, 1999
3 (1997 Compilation and Parts 100 and 101)	(869–038–00002–4)	20.00	[1] Jan. 1, 1999
4	(869–034–00003–7)	7.00	[5] Jan. 1, 1999
5 Parts:			
1–699	(869–038–00004–1)	37.00	Jan. 1, 1999
700–1199	(869–038–00005–9)	27.00	Jan. 1, 1999
1200–End, 6 (6 Reserved)	(869–038–00006–7)	44.00	Jan. 1, 1999
7 Parts:			
1–26	(869–038–00007–5)	25.00	Jan. 1, 1999
27–52	(869–038–00008–3)	32.00	Jan. 1, 1999
53–209	(869–038–00009–1)	20.00	Jan. 1, 1999
210–299	(869–038–00010–5)	47.00	Jan. 1, 1999
300–399	(869–038–00011–3)	25.00	Jan. 1, 1999
400–699	(869–038–00012–1)	37.00	Jan. 1, 1999
700–899	(869–038–00013–0)	32.00	Jan. 1, 1999
900–999	(869–038–00014–8)	41.00	Jan. 1, 1999
1000–1199	(869–038–00015–6)	46.00	Jan. 1, 1999
1200–1599	(869–038–00016–4)	34.00	Jan. 1, 1999
1600–1899	(869–038–00017–2)	55.00	Jan. 1, 1999
1900–1939	(869–038–00018–1)	19.00	Jan. 1, 1999
1940–1949	(869–038–00019–9)	34.00	Jan. 1, 1999
1950–1999	(869–038–00020–2)	41.00	Jan. 1, 1999
2000–End	(869–038–00021–1)	27.00	Jan. 1, 1999
8	(869–038–00022–9)	36.00	Jan. 1, 1999
9 Parts:			
1–199	(869–038–00023–7)	42.00	Jan. 1, 1999
200–End	(869–038–00024–5)	37.00	Jan. 1, 1999
10 Parts:			
1–50	(869–038–00025–3)	42.00	Jan. 1, 1999
51–199	(869–038–00026–1)	34.00	Jan. 1, 1999
200–499	(869–038–00027–0)	33.00	Jan. 1, 1999
500–End	(869–038–00028–8)	43.00	Jan. 1, 1999
11	(869–038–0002–6)	20.00	Jan. 1, 1999
12 Parts:			
1–199	(869–038–00030–0)	17.00	Jan. 1, 1999
200–219	(869–038–00031–8)	20.00	Jan. 1, 1999
220–299	(869–038–00032–6)	40.00	Jan. 1, 1999
300–499	(869–038–00033–4)	25.00	Jan. 1, 1999
500–599	(869–038–00034–2)	24.00	Jan. 1, 1999
600–End	(869–038–00035–1)	45.00	Jan. 1, 1999
13	(869–038–00036–9)	25.00	Jan. 1, 1999
14 Parts:			
1–59	(869–038–00037–7)	50.00	Jan. 1, 1999
60–139	(869–038–00038–5)	42.00	Jan. 1, 1999
140–199	(869–038–00039–3)	17.00	Jan. 1, 1999
200–1199	(869–038–00040–7)	28.00	Jan. 1, 1999
1200–End	(869–038–00041–5)	24.00	Jan. 1, 1999
15 Parts:			
0–299	(869–038–00042–3)	25.00	Jan. 1, 1999
300–799	(869–038–00043–1)	36.00	Jan. 1, 1999
800–End	(869–038–00044–0)	24.00	Jan. 1, 1999
16 Parts:			
0–999	(869–038–00045–8)	32.00	Jan. 1, 1999
1000–End	(869–038–00046–6)	37.00	Jan. 1, 1999
17 Parts:			
1–199	(869–038–00048–2)	29.00	Apr. 1, 1999
200–239	(869–038–00049–1)	34.00	Apr. 1, 1999
240–End	(869–034–00050–9)	40.00	Apr. 1, 1998
18 Parts:			
1–399	(869–038–00051–2)	48.00	Apr. 1, 1999
400–End	(869–034–00052–5)	13.00	Apr. 1, 1998
19 Parts:			
1–140	(869–034–00053–3)	34.00	Apr. 1, 1998
141–199	(869–034–00054–1)	33.00	Apr. 1, 1998
200–End	(869–034–00055–0)	15.00	Apr. 1, 1998
20 Parts:			
1–399	(869–0348–00056–8)	29.00	Apr. 1, 1998
400–499	(869–038–00057–1)	51.00	Apr. 1, 1999
500–End	(869–038–00058–0)	44.00	[7] Apr. 1, 1999
21 Parts:			
1–99	(869–034–00059–2)	21.00	Apr. 1, 1998
100–169	(869–034–00060–6)	27.00	Apr. 1, 1998
170–199	(869–034–00061–4)	28.00	Apr. 1, 1998
200–299	(869–034–00062–2)	9.00	Apr. 1, 1998
300–499	(869–034–00063–1)	50.00	Apr. 1, 1998
500–599	(869–034–00064–9)	28.00	Apr. 1, 1998
600–799	(869–034–00065–7)	9.00	Apr. 1, 1998
800–1299	(869–034–00066–5)	32.00	Apr. 1, 1998
1300–End	(869–038–00067–9)	14.00	Apr. 1, 1999
22 Parts:			
*1–299	(869–038–00068–7)	44.00	Apr. 1, 1999
300–End	(869–034–00069–0)	31.00	Apr. 1, 1998
23	(869–034–00070–3)	25.00	Apr. 1, 1998
24 Parts:			
0–199	(869–034–00071–1)	32.00	Apr. 1, 1998
200–499	(869–034–00072–0)	28.00	Apr. 1, 1998
500–699	(869–038–00073–3)	18.00	Apr. 1, 1999
700–1699	(869–034–00074–6)	45.00	Apr. 1, 1998
1700–End	(869–034–00075–4)	17.00	Apr. 1, 1998
25	(869–034–00076–2)	42.00	Apr. 1, 1998
26 Parts:			
§§ 1.0-1–1.60	(869–034–00077–1)	26.00	Apr. 1, 1998
§§ 1.61–1.169	(869–034–00078–9)	48.00	Apr. 1, 1998
§§ 1.170–1.300	(869–034–00079–7)	31.00	Apr. 1, 1998
§§ 1.301–1.400	(869–034–00080–1)	23.00	Apr. 1, 1998
§§ 1.401–1.440	(869–034–00081–9)	39.00	Apr. 1, 1998
§§ 1.441-1.500	(869-034-00082-7)	29.00	Apr. 1, 1998
§§ 1.501–1.640	(869–038–00083–1)	27.00	[7] Apr. 1, 1999
§§ 1.641–1.850	(869–034–00084–3)	32.00	Apr. 1, 1998
§§ 1.851–1.907	(869–034–00085–1)	36.00	Apr. 1, 1998
§§ 1.908–1.1000	(869–034–00086–0)	35.00	Apr. 1, 1998
§§ 1.1001–1.1400	(869–034–00087–8)	38.00	Apr. 1, 1998
§§ 1.1401–End	(869–034–00088–6)	51.00	Apr. 1, 1998
2–29	(869–034–00089–4)	36.00	Apr. 1, 1998
30–39	(869–034–00090–8)	25.00	Apr. 1, 1998
40–49	(869–034–00091–6)	16.00	Apr. 1, 1998
50–299	(869–034–00092–4)	19.00	Apr. 1, 1998
300–499	(869–034–00093–2)	34.00	Apr. 1, 1998
500–599	(869–034–00094–1)	10.00	Apr. 1, 1998
600–End	(869–034–00095–9)	9.00	Apr. 1, 1998
27 Parts:			
1–199	(869–034–00096–7)	49.00	Apr. 1, 1998

Title	Stock Number	Price	Revision Date
200–End	(869–034–00097–5)	17.00	[6] Apr. 1, 1998
28 Parts:			
0-42	(869–034–00098–3)	36.00	July 1, 1998
43-end	(869-034-00099-1)	30.00	July 1, 1998
29 Parts:			
0–99	(869–034–00100–9)	26.00	July 1, 1998
100–499	(869–034–00101–7)	12.00	July 1, 1998
500–899	(869–034–00102–5)	40.00	July 1, 1998
900–1899	(869–034–00103–3)	20.00	July 1, 1998
1900–1910 (§§ 1900 to 1910.999)	(869–034–00104–1)	44.00	July 1, 1998
1910 (§§ 1910.1000 to end)	(869–034–00105–0)	27.00	July 1, 1998
1911–1925	(869–034–00106–8)	17.00	July 1, 1998
1926	(869–034–00107–6)	30.00	July 1, 1998
1927–End	(869–034–00108–4)	41.00	July 1, 1998
30 Parts:			
1–199	(869–034–00109–2)	33.00	July 1, 1998
200–699	(869–034–00110–6)	29.00	July 1, 1998
700–End	(869–034–00111–4)	33.00	July 1, 1998
31 Parts:			
0–199	(869–034–00112–2)	20.00	July 1, 1998
200–End	(869–034–00113–1)	46.00	July 1, 1998
32 Parts:			
1–39, Vol. I		15.00	[2] July 1, 1984
1–39, Vol. II		19.00	[2] July 1, 1984
1–39, Vol. III		18.00	[2] July 1, 1984
1–190	(869–034–00114–9)	47.00	July 1, 1998
191–399	(869–034–00115–7)	51.00	July 1, 1998
400–629	(869–034–00116–5)	33.00	July 1, 1998
630–699	(869–034–00117–3)	22.00	[4] July 1, 1998
700–799	(869–034–00118–1)	26.00	July 1, 1998
800–End	(869–034–00119–0)	27.00	July 1, 1998
33 Parts:			
1–124	(869–034–00120–3)	29.00	July 1, 1998
125–199	(869–034–00121–1)	38.00	July 1, 1998
200–End	(869–034–00122–0)	30.00	July 1, 1998
34 Parts:			
1–299	(869–034–00123–8)	27.00	July 1, 1998
300–399	(869–034–00124–6)	25.00	July 1, 1998
400–End	(869–034–00125–4)	44.00	July 1, 1998
35	(869–034–00126–2)	14.00	July 1, 1998
36 Parts			
1–199	(869–034–00127–1)	20.00	July 1, 1998
200–299	(869–034–00128–9)	21.00	July 1, 1998
300–End	(869–034–00129–7)	35.00	July 1, 1998
37	(869–034–00130–1)	27.00	July 1, 1998
38 Parts:			
0–17	(869–034–00131–9)	34.00	July 1, 1998
18–End	(869–034–00132–7)	39.00	July 1, 1998
39	(869–034–00133–5)	23.00	July 1, 1998
40 Parts:			
1–49	(869–034–00134–3)	31.00	July 1, 1998
50–51	(869–034–00135–1)	24.00	July 1, 1998
52 (52.01–52.1018)	(869–034–00136–0)	28.00	July 1, 1998
52 (52.1019–End)	(869–034–00137–8)	33.00	July 1, 1998
53–59	(869–034–00138–6)	17.00	July 1, 1998
60	(869–034–00139–4)	53.00	July 1, 1998
61–62	(869–034–00140–8)	18.00	July 1, 1998
63	(869–034–00141–6)	57.00	July 1, 1998
64–71	(869–034–00142–4)	11.00	July 1, 1998
72–80	(869–034–00143–2)	36.00	July 1, 1998
81–85	(869–034–00144–1)	31.00	July 1, 1998
86	(869–034–00144–9)	53.00	July 1, 1998
87-135	(869–034–00146–7)	47.00	July 1, 1998
136–149	(869–034–00147–5)	37.00	July 1, 1998
150–189	(869–034–00148–3)	34.00	July 1, 1998
190–259	(869–034–00149–1)	23.00	July 1, 1998
260–265	(869–034–00150–9)	29.00	July 1, 1998
266–299	(869–034–00151–3)	33.00	July 1, 1998
300–399	(869–034–00152–1)	26.00	July 1, 1998
400–424	(869–034–00153–0)	33.00	July 1, 1998
425–699	(869–034–00154–8)	42.00	July 1, 1998
700–789	(869–034–00155–6)	41.00	July 1, 1998
790–End	(869–034–00156–4)	22.00	July 1, 1998
41 Chapters:			
1, 1–1 to 1–10		13.00	[3] July 1, 1984
1, 1–11 to Appendix, 2 (2 Reserved)		13.00	[3] July 1, 1984
3–6		14.00	[3] July 1, 1984
7		6.00	[3] July 1, 1984
8		4.50	[3] July 1, 1984
9		13.00	[3] July 1, 1984
10–17		9.50	[3] July 1, 1984
18, Vol. I, Parts 1–5		13.00	[3] July 1, 1984
18, Vol. II, Parts 6–19		13.00	[3] July 1, 1984
18, Vol. III, Parts 20–52		13.00	[3] July 1, 1984
19–100		13.00	[3] July 1, 1984
1–100	(869–034–00157–2)	13.00	July 1, 1998
101	(869–034–00158–1)	37.00	July 1, 1998
102–200	(869–034–00158–9)	15.00	July 1, 1998
201–End	(869–034–00160–2)	13.00	July 1, 1998
42 Parts:			
1–399	(869–034–00161–1)	34.00	Oct. 1, 1998
400–429	(869–034–00162–9)	41.00	Oct. 1, 1998
430–End	(869–034–00163–7)	51.00	Oct. 1, 1998
43 Parts:			
1–999	(869–034–00164–5)	30.00	Oct. 1, 1998
1000–end	(869–034–00165–3)	48.00	Oct. 1, 1998
44	(869–034–00166–1)	48.00	Oct. 1, 1998
45 Parts:			
1–199	(869–034–00167–0)	30.00	Oct. 1, 1998
200–499	(869–034–00168–8)	18.00	Oct. 1, 1998
500–1199	(869–034–00169–6)	29.00	Oct. 1, 1998
1200–End	(869–034–00170–0)	39.00	Oct. 1, 1998
46 Parts:			
1–40	(869–034–00171–8)	26.00	Oct. 1, 1998
41–69	(869–034–00172–6)	21.00	Oct. 1, 1998
70–89	(869–034–00173–4)	8.00	Oct. 1, 1998
90–139	(869–034–00174–2)	26.00	Oct. 1, 1998
140–155	(869–034–00175–1)	14.00	Oct. 1, 1998
156–165	(869–034–00176–9)	19.00	Oct. 1, 1998
166–199	(869–034–00177–7)	25.00	Oct. 1, 1998
200–499	(869–034–00178–5)	22.00	Oct. 1, 1998
500–End	(869–034–00179–3)	16.00	Oct. 1, 1998
47 Parts:			
0–19	(869–034–00180–7)	36.00	Oct. 1, 1998
20–39	(869–034–00181–5)	27.00	Oct. 1, 1998
40–69	(869–034–00182–3)	24.00	Oct. 1, 1998
70–79	(869–034–00183–1)	37.00	Oct. 1, 1998
80–End	(869–034–00184–0)	40.00	Oct. 1, 1998
48 Chapters:			
1 (Parts 1–51)	(869–034–00185–8)	51.00	Oct. 1, 1998
1 (Parts 52–99)	(869–034–00186–6)	29.00	Oct. 1, 1998
2 (Parts 201–299)	(869–034–00187–4)	34.00	Oct. 1, 1998
3–6	(869–034–00188–2)	29.00	Oct. 1, 1998
7–14	(869–034–00189–1)	32.00	Oct. 1, 1998
15–28	(869–034–00190–4)	33.00	Oct. 1, 1998
29–End	(869–034–00191–2)	24.00	Oct. 1, 1998
49 Parts:			
1–99	(869–034–00192–1)	31.00	Oct. 1, 1998
100–185	(869–034–00193–9)	50.00	Oct. 1, 1998
186–199	(869–034–00194–7)	11.00	Oct. 1, 1998
200–399	(869–034–00195–5)	46.00	Oct. 1, 1998
400–999	(869–034–00196–3)	54.00	Oct. 1, 1998
1000–1199	(869–034–00197–1)	17.00	Oct. 1, 1998
1200–End	(869–034–00198–0)	13.00	Oct. 1, 1998
50 Parts:			
1–199	(869–034–00199–8)	42.00	Oct. 1, 1998
200–599	(869–034–00200–5)	22.00	Oct. 1, 1998
600–End	(869–034–00201–3)	33.00	Oct. 1, 1998

Title	Stock Number	Price	Revision Date
CFR Index and Findings Aids	(869–034–00049–6)	46.00	Jan. 1, 1998
Complete 1998 CFR set		951.00	1998
Microfiche CFR Edition:			
Subscription (mailed as issued)		247.00	1998
Individual copies		1.00	1998
Complete set (one-time mailing)		247.00	1997
Complete set (one-time mailing)		264.00	1996

[1] Because Title 3 is an annual compilation, this volume and all previous volumes should be retained as a permanent reference source.

[2] The July 1, 1985 edition of 32 CFR Parts 1–189 contains a note only for Parts 1–39 inclusive. For the full text of the Defense Acquisition Regulations in Parts 1–39, consult the three CFR volumes issued as of July 1, 1984, containing those parts.

[3] The July 1, 1985 edition of 41 CFR Chapters 1–100 contains a note only for Chapters 1 to 49 inclusive. For the full text of procurement regulations in Chapters 1 to 49, consult the eleven CFR volumes issued as of July 1, 1984 containing those chapters.

[4] No amendments to this volume were promulgated during the period July 1, 1997 to June 30, 1998. The volume issued July 1, 1997, should be retained.

[5] No amendments to this volume were promulgated during the period January 1, 1998 through December 31, 1998. The CFR volume issued as of January 1, 1997 should be retained.

[6] No amendments to this volume were promulgated during the period April 1, 1997, through April 1, 1998. The CFR volume issued as of April 1, 1997, should be retained.

[7] No amendments to this volume were promulgated during the period April 1, 1998, through April 1, 1999. The CFR volume issued as of April 1, 1998, should be retained.