§ 21.7137 Rates of payment of basic educational assistance for individuals with remaining entitlement under 38 U.S.C. ch. 34.

(a) *Minimum rates.* (1) Except as elsewhere provided in this section, the monthly rate of basic educational assistance for training that occurs after September 30, 1998, and before October 1, 1999, is the rate stated in the following table:

Training	Monthly rate			
	No dependents	One dependent	Two dependents	Additional for each additional dependent
Full time	$716.00	$752.00	$783.00	$16.00
¾ time	537.50	564.00	587.50	12.00
½ time	358.00	376.00	391.50	8.50
Less than ½ but more than ¼ time	358.00	.....	.....	.....
¼ time or less	179.00	.....	.....	.....

(Authority: 38 U.S.C. 3015(e), (f), and (g))

(2) For veterans pursuing apprenticeship or other on-job training, the monthly rate of basic educational assistance for training that occurs after September 30, 1998, and before October 1, 1999, is the rate stated in the following table:

Training	Monthly rate			
	No dependents	One dependent	Two dependents	Additional for each additional dependent
1st six months of pursuit of program	$498.75	$511.13	$522.00	$5.25
2nd six months of pursuit of program	346.78	356.13	363.83	3.85
3rd six months of pursuit of program	208.60	214.73	219.45	2.45
Remaining pursuit of program	196.70	202.48	207.73	2.45

(Authority: 38 U.S.C. 3015(e), (f), (g))

(3) The monthly rate payable to a veteran who is pursuing a cooperative course is the rate stated in the following table:

Training period	Monthly rate			
	No dependents	One dependent	Two dependents	Additional for each additional dependent
Oct. 1, 1997–Sept. 30, 1998	$627.85	$663.85	$694.85	$16.00
On or after Oct. 1, 1998, and before Oct. 1, 1999	716.00	752.00	783.00	16.00

(Authority: 38 U.S.C. 3015)

* * * * *

[FR Doc. 99–14916 Filed 6–11–99; 8:45 am]

BILLING CODE 8320–01–P

ENVIRONMENTAL PROTECTION AGENCY

40 CFR Parts 9 and 63

[FRL–6345–3]

RIN 2060–AE75

National Emission Standards for Hazardous Air Pollutants for Source Categories; Wool Fiberglass Manufacturing

AGENCY: Environmental Protection Agency (EPA).

ACTION: Final rule.

SUMMARY: This action promulgates national emission standards for hazardous air pollutants (NESHAP) for new and existing sources in wool fiberglass manufacturing facilities. This action also adds Method 316 and Method 318 for the measurement of formaldehyde from wool fiberglass manufacturing lines to appendix A of part 63.

The hazardous air pollutants (HAPs) emitted by the facilities covered by this rule include compounds of three metals (arsenic, chromium, lead) and three organic HAPs (formaldehyde, phenol, and methanol). Exposure to these HAPs can cause reversible or irreversible health effects including carcinogenic, respiratory, nervous system, developmental, reproductive, and/or dermal health effects. The EPA estimates the final rule will reduce nationwide emissions of HAPs from these facilities by 530 megagrams per year (Mg/yr) (580 tons per year [ton/yr]), an approximate 30 percent reduction from the current level of emissions. In addition, the rule will achieve an estimated 760 Mg/yr (840 ton/yr) of particulate matter (PM) reductions.

These standards implement section 112(d) of the Clean Air Act (CAA) and are based on the Administrator's determination that wool fiberglass manufacturing facilities may reasonably be anticipated to emit several of the 188 HAPs listed in section 112(b) of the CAA from the various process operations found within the industry. The final rule will provide protection to the public by requiring all wool

fiberglass plants that are major sources to meet emission standards reflecting the application of the maximum achievable control technology (MACT).

In compliance with the Paperwork Reduction Act (PRA), this action also amends the table that lists the Office of Management and Budget (OMB) control numbers issued under the PRA for this rule.

A supplement to the proposed rule was proposed in the **Federal Register** on February 12, 1999 (64 FR 7149). The EPA will give careful consideration to all comments on the supplemental proposal and will amend this final rule in a future action as appropriate.

EFFECTIVE DATE: June 14, 1999. See the **SUPPLEMENTARY INFORMATION** section concerning judicial review.

ADDRESSES: *Docket.* The docket for this rulemaking containing the information considered by the EPA in development of the final rule is Docket No. A–95–24. This docket is available for public inspection between 8 a.m. and 5:30 p.m., Monday through Friday except for Federal holidays, at the following address: U.S. Environmental Protection Agency, Air and Radiation Docket and Information Center (6102), 401 M Street SW., Washington, DC 20460; telephone: (202) 260–7548. The docket is located at the above address in Room M–1500, Waterside Mall (ground floor). A reasonable fee may be charged for copying docket materials.

FOR FURTHER INFORMATION CONTACT: Ms. Mary Johnson, at (919) 541–5025, Minerals and Inorganic Chemicals Group, Emission Standards Division (MD–13), U.S. Environmental Protection Agency, Research Triangle Park, North Carolina 27711. For information regarding Methods 316 and 318, contact Ms. Rima N. Dishakjian, Emissions, Monitoring, and Analysis Division, at (919) 541–0443.

SUPPLEMENTARY INFORMATION:

Regulated Entities. Entities potentially regulated by the final rule are facilities that manufacture wool fiberglass. Regulated categories and entities are shown in Table 1.

TABLE 1.—REGULATED CATEGORIES AND ENTITIES

Entity category	Description
Industrial Federal Government: Not Affected. State/Local/Tribal Government: Not Affected.	Wool Fiberglass Manufacturing Plants (SIC 3296).

This table is not intended to be exhaustive, but rather provides a guide for readers regarding entities likely to be regulated by this action. This table lists the types of entities that the EPA is now aware could potentially be regulated by this action. To determine whether your facility is regulated by this action, you should carefully examine the applicability criteria in § 63.1380 of the final rule. If you have any questions regarding the applicability of this action to a particular entity, consult the appropriate regional representative:

Region I—Janet Bowen, Office of Ecosystem Protection, U.S. EPA, Region I, CAP, JFK Federal Building, Boston, MA 02203, (617) 565–3595.

Region II—Kenneth Eng, Air Compliance Branch Chief, U.S. EPA, Region II, 290 Broadway, New York, NY 10007–1866, (212) 637–4000.

Region III—Bernard Turlinski, Air Enforcement Branch Chief, U.S. EPA, Region III, 3AT10, 841 Chestnut Building, Philadelphia, PA 19107, (215) 566–2110.

Region IV—Lee Page, Air Enforcement Branch, U.S. EPA, Region IV, Atlanta Federal Center, 61 Forsyth Street, Atlanta, GA 30303–3104, (404) 562–9131.

Region V—George T. Czerniak, Jr., Air Enforcement Branch Chief, U.S. EPA, Region V, 5AE–26, 77 West Jackson Street, Chicago, IL 60604, (312) 353–2088.

Region VI—John R. Hepola, Air Enforcement Branch Chief, U.S. EPA, Region VI, 1445 Ross Avenue, Suite 1200, Dallas, TX 75202–2733, (214) 665–7220.

Region VII—Donald Toensing, Chief, Air Permitting and Compliance Branch, U.S. EPA, Region VII, 726 Minnesota Avenue, Kansas City, KS 66101, (913) 551–7446.

Region VIII—Douglas M. Skie, Air and Technical Operations Branch Chief, U.S. EPA, Region VIII, 999 18th Street, Suite 500, Denver, CO 80202–2466, (303) 312–6432.

Region IX—Barbara Gross, Air Compliance Branch Chief, U.S. EPA, Region IX, 75 Hawthorne Street, San Francisco, CA 94105, (415) 744–1138.

Region X—Anita Frankel, Air and Radiation Branch Chief, U.S. EPA, Region X, AT–092, 1200 Sixth Avenue, Seattle, WA 98101, (206) 553–1757.

Judicial Review. The NESHAP for wool fiberglass manufacturing plants was proposed on March 31, 1997 (62 FR 15228); this action announces the EPA's final decisions on the rule. Under section 307(b)(1) of the CAA, judicial review of the NESHAP is available only by filing a petition for review in the U.S. Court of Appeals for the District of Columbia Circuit within 60 days of today's publication of this final rule. Under section 307(b)(2) of the CAA, the requirements that are the subject of today's notice may not be challenged later in civil or criminal proceedings brought by the EPA to enforce these requirements.

Technology Transfer Network. In addition to being available in the docket, an electronic copy of today's document, which includes the regulatory text, is available through the Technology Transfer Network (TTN) at the Unified Air Toxics Website (UATW). Following promulgation, a copy of the rule will be posted at the TTN's policy and guidance page for newly proposed or promulgated rules (http://www.epa.gov/ttn/oarpg/t3pfpr.html). The TTN facilitates the exchange of information in various areas of air pollution control, such as technology. If more information on the TTN is needed, call the TTN HELP line at (919) 541–5384.

Outline. The following outline is provided to aid in reading this preamble to the final rule.

I. Background
  A. Background and Purpose of Standards
  B. Technical Basis of Regulation
  C. Stakeholder and Public Participation
II. Summary of Final Rule
  A. Applicability
  B. Emission Standards
  C. Compliance and Performance Test Provisions
  D. Monitoring and Operating Requirements
  E. Notification, Reporting, and Recordkeeping Requirements
III. Summary of Changes Since Proposal
  A. Definitions
  B. Performance Test Provisions
  C. Monitoring Requirements
  D. Notification, Reporting, and Recordkeeping Requirements
  E. Display of OMB Control Numbers
IV. Summary of Impacts
V. Summary of Responses to Major Comments
  A. Selection of Pollutants

B. Selection of Emission Limits
C. Monitoring
D. Performance Tests
VI. Administrative Requirements
A. Docket
B. Executive Order 12866—Regulatory Planning and Review
C. Executive Order 12875—Enhancing the Intergovernmental Partnership
D. Unfunded Mandates Reform Act
E. Regulatory Flexibility
F. Submission to Congress and the General Accounting Office
G. Paperwork Reduction Act
H. Pollution Prevention Act
I. National Technology Transfer and Advancement Act
J. Executive Order 13045—Protection of Children from Environmental Health Risks and Safety Risks
K. Executive Order 13084—Consultation and Coordination With Indian Tribal Governments

I. Background

A. Background and Purpose of Standards

Section 112 of the CAA requires that the EPA promulgate regulations for the control of HAP emissions from both new and existing major sources. The statute requires the regulations to reflect the maximum degree of reduction in emissions of HAPs that is achievable, taking into consideration the cost of achieving the emission reduction, any nonair quality health and environmental impacts, and energy requirements. This level of control is commonly referred to as MACT.

Section 112 of the CAA requires the EPA to establish national standards to reduce air emissions from major sources and certain area sources that emit one or more HAPs. Section 112(b) contains a list of HAPs to be regulated by NESHAP. Section 112(c) directs the Agency to use this pollutant list to develop and publish a list of source categories for which NESHAP will be developed and a schedule for development of these NESHAP. The Agency must list all known source categories and subcategories of ''major sources'' that emit one or more of the listed HAPs. A major source is defined in section 112(a) as any stationary source or group of stationary sources located within a contiguous area and under common control that emits or has the potential to emit in the aggregate, considering controls, 10 tons per year or more of any one HAP or 25 tons per year or more of any combination of HAPs. This list of source categories was published in the **Federal Register** on July 16, 1992 (57 FR 31576) and includes wool fiberglass manufacturing.

The control of HAPs is achieved through the promulgation of technology-based emission standards under section 112 for categories of sources that emit HAPs. Emission reductions may be accomplished through the application of measures, processes, methods, systems, or techniques including, but not limited to: (1) Reducing the volume of, or eliminating emissions of, such pollutants through process changes, substitution of materials, or other modifications; (2) enclosing systems or processes to eliminate emissions; (3) collecting, capturing, or treating such pollutants when released from a process, stack, storage or fugitive emissions point; (4) design, equipment, work practice, or operational standards (including requirements for operator training or certification) as provided in subsection (h); or (5) a combination of the above. (See section 112(d)(2).) The EPA may promulgate more stringent regulations to address residual risk that remains after the imposition of controls. (See section 112(f)(2).) Pursuant to section 112(d) of the CAA, on March 31, 1997, the EPA proposed NESHAP for new and existing major sources in the wool fiberglass manufacturing source category (62 FR 15228).

B. Technical Basis of Regulation

Since proposal, no changes have been made in the emission standards or the MACT floor that is the basis for the emission standards. The rationale for the selection of the standards, including their technical basis, is discussed in the preamble to the proposed rule (62 FR 15228, March 31, 1997).

C. Stakeholder and Public Participation

Various stakeholders were involved in the development of these standards. Individual wool fiberglass companies and the industry association (the North American Insulation Manufacturers Association) were consulted throughout the development of these standards. Representatives from State and Regional enforcement agencies, as well as representatives from other offices within the EPA, participated in the regulatory development process by reviewing and commenting on the standards during development.

The NESHAP for wool fiberglass manufacturing (40 CFR part 63, subpart NNN) was proposed in the **Federal Register** on March 31, 1997 (62 FR 15228). The public comment period ended on May 30, 1997. Industry representatives, regulatory authorities, and environmental groups had the opportunity to comment on the proposed standard and to provide additional information during the public comment period. Although the Agency offered at proposal the opportunity for oral presentation of data, views, or arguments concerning the proposed rule, no one requested a hearing and a hearing was not held. The EPA received nine letters containing comments on the proposed standard from various groups including associations representing industry, regulatory agencies, and air pollution control equipment vendors, as well as from State regulatory agencies and a private citizen. This final rule reflects the EPA's full consideration of the comments. The major public comments, along with the EPA's responses to the comments on the proposed rule, are summarized in this preamble. A more detailed discussion of public comments and EPA's responses is contained in the docket (Docket No. A–95–24; Item V–C–2).

II. Summary of Final Rule

A. Applicability

As stated in § 63.1380, the final NESHAP applies to each of the following existing and newly constructed sources located at a wool fiberglass manufacturing facility: All glass-melting furnaces, rotary spin (RS) manufacturing lines that produce bonded building insulation, and flame attenuation (FA) manufacturing lines producing bonded pipe insulation. The rule also applies to new FA manufacturing lines producing bonded heavy-density products. RS and FA manufacturing lines that produce nonbonded products, where no binder is applied, are not subject to the standards. A facility emitting less than 10 tons per year of any HAP or less than 25 tons per year of any combination of HAPs is an area source and is not subject to this NESHAP. Facilities that manufacture mineral wool from rock or slag are not subject to this rule but are subject to a separate NESHAP for mineral wool production. (See 62 FR 25370 (May 8, 1997), notice of proposed rulemaking.)

B. Emission Standards

No changes were made to the emission limits as proposed. The emission standards are contained in the final rule in § 63.1382.

C. Compliance and Performance Test Provisions

As stated in § 63.1387, new sources must demonstrate compliance with the standard at startup. Existing sources must comply within 3 years of the effective date of the final rule but may request an extension for a fourth year pursuant to the regulatory authority under section 112(i)(3)(B) of the CAA.

As required by § 63.1384, owners or operators must, by conducting a performance test, demonstrate initial compliance with the PM emission limits for affected glass-melting furnaces and the formaldehyde emission limits for affected RS and FA manufacturing lines. During the initial performance test, the owner or operator must monitor and record the glass pull rate of the furnace and the glass pull rate of each manufacturing line during each of the three test runs and determine the emission rate for each run. A determination of compliance will be based on the average of the three individual test runs.

In § 63.1384, the owner or operator is required to monitor and record all parameter values at least every 15 minutes during the performance test and to calculate an average using all of the parameter measurements. However, the standard requires that the appropriate parameters for incinerators and scrubbers be continuously monitored and recorded.

The owner or operator of an electrostatic precipitator (ESP) that is used to control PM emissions from a glass-melting furnace must monitor and record the ESP operating parameter(s) and establish the parameter limit(s) that will be used to monitor the ESP performance following the performance test. Where a cold top electric furnace is operated without the use of an add-on PM control device, the owner or operator must monitor and record the air temperature above the surface of the glass melt to ensure that the maximum temperature does not exceed 120 °C (250 °F) at a location 46 to 61 centimeters (18 to 24 inches) above the molten glass surface. The owner or operator of a glass-melting furnace that is not equipped with an add-on PM control device and that is not a cold top electric furnace must monitor and record the furnace operating parameter(s) and establish the parameter limit(s) that will be used to monitor the furnace performance following the performance test.

To determine compliance with the emission limits for new and existing RS and FA manufacturing lines subject to the standard, the owner or operator must measure formaldehyde emissions to the atmosphere from forming and, when present, curing and cooling processes, and sum the emissions from these processes. The owner or operator must, according to § 63.1384, conduct the initial performance test for each new or existing RS manufacturing line while making the building insulation product with the highest loss on ignition (LOI) expected to be produced on that manufacturing line. Initial performance tests are required for new FA manufacturing lines producing heavy-density products and on new and existing FA manufacturing lines producing pipe products. Performance tests for each affected FA manufacturing line must be conducted while producing the highest LOI heavy-density or pipe product, as appropriate.

During performance tests on affected RS and FA manufacturing lines, the owner or operator must record, as specified in § 63.1384, the LOI and density of each product for each line tested, the free formaldehyde content of the resin(s) used during the tests, and the binder formulation(s) used during the tests. The performance tests must be conducted using the resin having the highest free formaldehyde content that the owner or operator expects to use on that line. If the owner or operator uses process modifications to comply with the emission limits for affected RS or FA manufacturing lines, the owner or operator must monitor and record the process parameter(s) and establish the process parameter limit(s) that will be used to monitor the performance of the process modifications following the performance tests. If a wet scrubbing control device is used to control formaldehyde emissions from affected RS or FA manufacturing lines, the owner or operator must continuously monitor and record the scrubber parameters and establish the operating limits of the pressure drop across each scrubber, the scrubbing liquid flow rate to each scrubber, and the identity and feed rate of any chemical additive. Where a thermal incinerator is used to comply with the emission limit for formaldehyde, the owner or operator is required to continuously measure and record the incinerator operating temperature during the performance test and determine the average temperature during each 1-hour test run. The average of the three test runs will be used to monitor compliance.

Under § 63.1384, the owner or operator may seek to broaden or extend the operating limits established during the performance tests for affected control devices and processes by conducting additional performance tests to demonstrate compliance at the new limits.

Under § 63.1384, the owner or operator of RS and FA manufacturing lines may conduct short-term experimental production runs without conducting additional performance tests. The final rule requires the owner or operator to notify the Administrator at least 15 days in advance of an experimental production run. The experimental runs must not exceed 1 week in duration unless a longer period is approved by the Administrator. The owner or operator may conduct the experimental production run unless notified of a decision to disapprove the run or unless notified of a request for additional information prior to the date of the run.

D. Monitoring and Operating Requirements

Owners or operators of affected sources must submit, under § 63.1383, an operations, maintenance, and monitoring plan as part of their application for a part 70 permit. The plan must include procedures for the proper operation and maintenance of processes and control devices used to comply with the emission limits as well as the corrective actions to be taken when control devices or process parameters deviate from allowable levels established during performance testing. The plan also must identify the procedures for the proper operation and maintenance of monitoring devices including periodic calibration and verification of accuracy.

Section 63.1383 requires that each baghouse used on a glass-melting furnace be equipped with a bag leak detection system having an audible alarm that automatically sounds when an increase in particulate emissions above a predetermined level is detected. Such a device monitors the performance of the baghouse, detects an increase in PM emissions, and indicates that maintenance of the baghouse is needed. The operating limits of § 63.1382 require the owner or operator to initiate corrective action within 1 hour of the alarm sounding according to the operations, maintenance, and monitoring plan. If the alarm is activated for more than 5 percent of the total operating time during the 6-month block reporting period, the owner or operator must develop and implement a Quality Improvement Plan (QIP). The QIP must be consistent with the compliance assurance monitoring rule, 40 CFR part 64 subpart D (62 FR 54900, October 22, 1997).

The monitoring requirements of § 63.1383 require the owner or operator of each ESP used to control an affected glass-melting furnace to monitor and record the established ESP parameter(s) according to the procedures in the operations, maintenance, and monitoring plan. The final rule requires the owner or operator to initiate corrective action within 1 hour, according to the procedures in the facility's operations, maintenance, and monitoring plan, if the monitored

parameter(s) deviates from the limit(s) established during performance tests. If the monitored parameter(s) is outside the established limit(s) for more than 5 percent of the total operating time in a 6-month block reporting period, the owner or operator must develop and implement a QIP. The owner or operator must operate the ESP such that the monitored parameter(s) does not deviate from the established limit(s) for more than 10 percent of the total operating time in a 6-month block reporting period.

Under § 63.1383 of the final rule, the owner or operator of a cold top electric furnace, who complies with the PM emission limit without the use of an air pollution control device, must monitor and record the air temperature above the glass melt to monitor when the temperature exceeds the maximum temperature of 120 °C (250 °F) measured at a location 46 to 61 centimeters (18 to 24 inches) above the molten glass surface. The owner or operator must initiate corrective action within 1 hour according to § 63.1382 if the average air temperature exceeds the maximum. If the air temperature as measured above the molten glass exceeds the maximum for more than 5 percent of the total operating time in a 6-month block reporting period, the owner or operator is required to develop and implement a QIP. The rule also requires that the owner or operator operate the cold top electric furnace so that the maximum temperature is not exceeded for more than 10 percent of the total operating time in a 6-month block reporting period.

The final rule (§ 63.1383) requires the owner or operator of a glass-melting furnace, which is not equipped with an air pollution control device for PM control and which is not a cold top electric furnace, to monitor the glass-melting furnace according to the procedures in the operation, maintenance, and monitoring plan. The plan must include the furnace operating parameter(s) and parameter limit(s) to be monitored to identify any operational problems, a monitoring schedule, and recordkeeping procedures. As required by § 63.1382, the owner or operator must initiate corrective action within 1 hour if the monitored operating parameter(s) deviates from the limits established during the initial performance. The rule also requires the owner or operator to develop and implement a QIP if the monitored furnace operating parameter value(s) is outside the established limit(s) for more than 5 percent of the total operating time in a 6-month block reporting period. The owner or operator must operate the affected glass-melting furnace so that the monitored furnace parameter value(s) is not outside the established limit(s) for more than 10 percent of the total operating time in a 6-month block reporting period.

The final rule, under § 63.1383, requires the owner or operator to monitor and record the glass pull rate on all existing and new glass-melting furnaces. If the monitored pull rate exceeds by more than 20 percent the average glass pull rate measured during the performance test, the owner or operator must initiate corrective action within 1 hour as required by § 63.1383. If the glass pull rate exceeds (by more than 20 percent) the average established during the performance test for more than 5 percent of the total operating time in a 6-month block reporting period, the owner or operator must develop and implement a QIP. The final rule requires the owner or operator to operate the glass-melting furnace so that the glass pull rate does not exceed (by more than 20 percent) the average established during the performance test for more than 10 percent of the total operating time in a 6-month block reporting period.

If an incinerator is used to control formaldehyde emissions, § 63.1383 requires that the owner or operator continuously monitor and record the operating temperature. Following the initial performance test, the operating limits of § 63.1382 require that the owner or operator maintain the temperature so that the temperature, averaged over any 3-hour block period, does not fall below the average temperature established during the initial performance test. As required in § 63.1383, the owner or operator must also annually inspect each incinerator to ensure its proper operation and maintenance. The rule specifies that, at a minimum, the following be included in the inspection:

(1) Burners, pilot assemblies, and pilot sensing devices;
(2) Adjustment of combustion air;
(3) Internal structures, such as baffles;
(4) Dampers, fans, and blowers;
(5) Proper sealing;
(6) Motors;
(7) Refractory lining; and (8) Incinerator shell.

Section 63.1383 of the final rule requires that the owner or operator, who uses a wet scrubbing control device to control formaldehyde emissions from affected RS or FA manufacturing lines, continuously monitor and record the gas pressure drop across each scrubber, the scrubbing liquid flow rate to each scrubber, and the identity and feed rate of any chemical added to the scrubbing liquid. As required in § 63.1382, the owner or operator must initiate corrective action according to the procedures in the facility's operations, maintenance, and monitoring plan within 1 hour if the average scrubber parameter for any 3-hour block period deviates from the limit(s) established during the initial performance test. If any scrubber parameter is outside an established limit(s) for more than 5 percent of the total operating time in a 6-month block reporting period, the owner or operator must develop and implement a QIP. The owner or operator must operate each affected scrubber such that none of the monitored parameters deviate from the established limits for more than 10 percent of the total operating time in a 6-month block reporting period.

As required in § 63.1383, the owner or operator who uses process modifications to comply with the emission limits for RS or FA manufacturing lines must establish a correlation between the parameter(s) to be monitored and formaldehyde emissions. The owner or operator must also include as part of the operations, maintenance, and monitoring plan information on how the process will be operated and maintained, the process parameter(s) to be monitored including the correlation between the parameter(s) and formaldehyde emissions, a monitoring schedule, and recordkeeping procedures to document proper operation of the process modifications. Section 63.1382 of the final rule requires the owner or operator to initiate corrective action within 1 hour of a deviation of a process parameter from the established limits and to develop and implement a QIP if the process parameter(s) is outside the established limit(s) for more than 5 percent of the total operating time in a 6-month block reporting period. The owner or operator must operate the process so that the process modification parameters do not deviate from the established limits for more than 10 percent of the total operating time in a 6-month block reporting period.

Under § 63.1383 of the final rule, the owner or operator must monitor and record the free formaldehyde content of each resin shipment, the formulation of each batch of binder used, and, every 8 hours, product LOI and product density. Following the performance test, § 63.1382 requires that the owner or operator must formulate binders using resins having a free formaldehyde content that does not exceed the free formaldehyde content range contained in the resin specification established and used during the performance test.

The final rule also requires that the owner or operator use a binder formulation that does not vary from the specification and operating range established during the performance test. For purposes of this rule, the addition of urea and lignin to the binder formulation is not considered changes in the formulation.

Failure to operate all affected processes and control devices according to the operating limits of § 63.1382, for example, failure to initiate corrective actions or failure to develop and implement a QIP, is considered a violation of the operating requirements.

Under § 63.1383 of this rule, the owner or operator may modify any of the control device or process parameter limits established during the initial performance tests provided that the owner or operator conducts additional emission testing to verify compliance at the new parameter levels.

E. Notification, Reporting, and Recordkeeping Requirements

Notification, reporting, and recordkeeping requirements for MACT standards are included in the NESHAP general provisions (40 CFR part 63, subpart A). The general provisions require: (1) Initial notification(s) of applicability, notification of performance test, and notification of compliance status; (2) a report of performance test results; (3) a startup, shutdown, and malfunction plan with semiannual reports of any reportable events; and (4) semiannual reports of deviations from established parameters. When deviations in operating parameters established during performance testing are reported, the owner or operator must report quarterly until a request to return to semiannual reporting is approved by the Administrator.

In addition to the requirements of the general provisions, § 63.1386 of the final rule specifies additional records to be kept by the owner or operator. The final rule requires the owner or operator to maintain records of the following, as applicable:

(1) Bag leak detection system alarms, including the date and time of the alarm, when corrective actions were initiated, the cause of the alarm, an explanation of the corrective actions taken, and when the cause of the alarm was corrected;

(2) ESP parameter value(s) used to monitor ESP performance, including any period when the value(s) deviates from the established limit(s), the date and time of the deviation, when corrective actions were initiated, the cause of the deviation, an explanation of the corrective actions taken, and when the cause of the deviation was corrected;

(3) Air temperature above the molten glass in an uncontrolled cold top electric furnace, including any period when the temperature exceeds 120 °C (250 °F) at a location 46 to 61 centimeters (18 to 24 inches) above the molten glass surface, the date and time of the exceedance, when corrective actions were initiated, the cause of the exceedance, an explanation of the corrective actions taken, and when the cause of the exceedance was corrected;

(4) Uncontrolled glass-melting furnace (that is not a cold top electric furnace) parameter value(s) used to monitor furnace performance, including any period when the value(s) exceeds the established limit(s), the date and time of the exceedance, when corrective actions were initiated, the cause of the exceedance, an explanation of the corrective actions taken, and when the cause of the exceedance was corrected;

(5) The LOI and product density for each bonded product manufactured on a RS or FA manufacturing line, the free formaldehyde content of each resin shipment received and used in binder formulation, and the binder formulation of each batch;

(6) Process parameter level(s) for RS and FA manufacturing lines that use process modifications to comply with the emission standards, including any period when the parameter level(s) deviates from the established limit(s), the date and time of the deviation, when corrective actions were initiated, the cause of the deviation, an explanation of the corrective actions taken, and when the cause of the deviation was corrected;

(7) Scrubber pressure drop, scrubbing liquid flow rate, and any chemical additive (including chemical feed rate to the scrubber), including any period when a parameter level(s) deviates from the established limit(s), the date and time of the deviation, when corrective actions were initiated, the cause of the deviation, an explanation of the corrective actions taken, and when the cause of the deviation was corrected;

(8) Incinerator operating temperature and results of periodic inspection of incinerator components, including any period when the temperature falls below the established average or the inspection identifies problems with the incinerator, the date and time of the problem, when corrective actions were initiated, the cause of the problem, an explanation of the corrective actions taken, and when the cause of the problem was corrected;

(9) Glass pull rate, including any period when the pull rate exceeds the average pull rate established during the performance test by more than 20 percent, the date and time of the exceedance, when corrective actions were initiated, the cause of the exceedance, an explanation of the corrective actions taken, and when the cause of the exceedance was corrected.

The NESHAP general provisions (40 CFR part 63, subpart A) require that records be maintained for at least 5 years from the date of each record. The owner or operator must retain the records onsite for at least 2 years but may retain the records offsite the remaining 3 years. The files may be retained on microfilm, on microfiche, on a computer, on computer disks, or on magnetic tape disks. Reports may be made on paper or on a labeled computer disk using commonly available and EPA-compatible computer software.

III. Summary of Changes Since Proposal

Changes have been incorporated into the final NESHAP for wool fiberglass manufacturing plants in response to comments on the proposed rule. The principal changes made since proposal are summarized below. Additional discussion of changes and the rationale for these changes is presented in section V of this preamble.

A. Definitions

In response to public comments, minor clarifying changes were made in § 63.1381 to the definitions of *building insulation, glass pull rate, manufacturing line,* and *wool fiberglass.* For purposes of clarifying the applicability of the rule and because of changes in the monitoring requirements for certain glass-melting furnaces, definitions were added for *cold top electric furnace, new source, and wool fiberglass manufacturing facility.*

B. Performance Test Provisions

In response to public comments, the EPA revised the proposed provision that would allow the owner or operator of RS and FA manufacturing lines subject to the NESHAP to conduct short-term experimental production runs without conducting additional performance tests. Section 63.1384 of the final rule requires that the owner or operator notify the Administrator at least 15 days in advance of an experimental production run. The duration of the test run may not exceed 1 week unless the Administrator approves a longer period. The Administrator may disapprove the experimental production run or request additional information but such disapproval or request for additional information must be made prior to the date of the experimental production run.

Other revisions clarify the proposed requirements for performance testing by specifying the frequency for monitoring and recording process and/or control device parameters during performance tests. The requirements to establish process and control device parameter limits for compliance monitoring are more appropriately a part of the requirements for performance testing and, thus, were moved from the monitoring requirements section to the performance test requirements section. The requirement for RS manufacturing lines to use the most frequently manufactured building insulation when conducting performance tests was deleted from the proposed definition of *building insulation.* A requirement was added to the performance testing provisions (§ 63.1384) for affected RS and FA manufacturing lines to conduct performance test while manufacturing the product having the highest LOI expected to be produced on the affected line. Because a glass-melting furnace may supply more than one manufacturing line, the final rule clarifies that, in addition to the furnace glass pull rate, the glass pull rate for the manufacturing line must also be monitored during the performance test.

Methods for measuring formaldehyde emissions from RS and FA manufacturing lines were contained in the proposed rule. Because the Agency now has an FTIR method (Method 320) that can be used at other sources, a self-validating method is no longer necessary. Method 318 was modified by removing the spiking procedures, which simplifies use of the method. The EPA has also clarified that this method is only applicable at mineral wool and wool fiberglass manufacturing sources. In response to comments, the final rule also contains editorial and clarifying changes in Method 318.

C. Monitoring Requirements

The monitoring requirements section in the proposed rule specified, for each control device and process, the parameter that was to be monitored. In the final rule, the section on monitoring requirements was revised. In the final rule, the monitoring requirements section (§ 63.1383) specifies that process or control device parameters must be monitored as well as monitoring frequency. The final rule recognizes that a deviation of a process or control device parameter from a level established during a performance test is more appropriately a violation of an operating limit rather than a violation of an emission limit. The operating limits are part of the standard and are specified in § 63.1382.

The proposed rule stated that the owner or operator of each affected source had to submit an operations, maintenance, and monitoring plan containing information on the proper operation and maintenance of process modifications and control devices, the parameter(s) to be monitored that would be used to determine compliance, and corrective actions to be taken when monitoring indicated a deviation from the limit(s) established during the performance tests. The final rule (§ 63.1383) clarifies that the operations, maintenance, and monitoring plan must also include procedures for the proper operation and maintenance of all monitoring devices. As proposed, each baghouse used on a glass-melting furnace must be equipped with a bag leak detection system having an audible alarm that automatically sounds when an increase in particulate emissions above a predetermined level is detected. In response to comments and for consistency with other regulations, § 63.1383 of the final standard requires that the monitor be capable of detecting PM emissions at concentrations of 10 milligrams per actual cubic meter (0.0044 grains per actual cubic foot). Also, because guidelines for the operation and maintenance of triboelectric bag leak detection systems have become available since proposal, these guidelines are specifically cited in the rule. The EPA's ''Fabric Filter Bag Leak Detection Guidance'' (EPA–454/R–98–015, September 1997) is available on the TTN under Emission Measurement Center (EMC), Continuous Emission Monitoring. To maintain consistency with bag leak detection system requirements in other regulations and to allow owners and operators flexibility to make necessary bag leak detection system adjustments, the final rule specifies that following initial adjustment, the owner or operator may adjust the range, averaging period, alarm set points, or alarm delay time as specified in the approved operations, maintenance, and monitoring plan. The final rule further specifies that in no event may the range be increased by more than 100 percent or decreased by more than 50 percent over a 365 day period unless a responsible official, as defined in § 63.2 of the general provisions in subpart A of 40 CFR part 63, certifies in writing to the Administrator that the fabric filter has been inspected and found to be in good operating condition. The final rule clarifies that the alarm must be located in an area where appropriate plant personnel will be able to hear it and that in response to the sounding of an alarm, the owner or operator must complete corrective actions in a timely manner. The final rule also specifies some example corrective actions for bag leak detection system alarms that may be included in the operations, maintenance, and monitoring plan.

Under the proposed rule, the owner or operator would continuously monitor and record the glass pull rate on all existing and new glass-melting furnaces. As a result of comments, § 63.1383 of the final rule clarifies what is meant by continuous monitoring of the glass pull rate. Similar revisions were made to the monitoring requirements for other control devices and process parameters to clarify the requirements for monitoring frequency. Revisions were made to the proposed rule to clarify when corrective actions are required in response to monitored levels that are outside the limits established during performance tests.

Under the proposed NESHAP, the owner or operator would be in violation of the standard if the binder formulation deviated from the formulation specifications used during the performance test. In response to comments, the final rule states that the addition of urea and lignin to the binder formulation does not constitute a change in binder formulation, and the operating limits in § 63.1382 for the binder formulation and the use of resins were clarified to incorporate this change.

In response to comments, clarifying changes were made throughout the monitoring and operating requirements to indicate that because some control device or process parameters used for monitoring purposes may be established as minimum and/or maximum values, it is not always appropriate to have requirements that are in terms of exceeding control device or process parameter values. Other minor editorial changes were made throughout the monitoring and operating requirements to improve clarity.

Consistent with the general provision requirements to operate and maintain air pollution equipment in a manner consistent with good air pollution control practices, the final rule contains specific provisions for the annual inspection of incinerators to ensure that they maintain their performance in reducing formaldehyde emissions.

The proposed rule allowed the owner or operator of a glass-melting furnace that complies with the PM emission limit without the use of add-on control devices to determine the appropriate process parameter or control device parameter to monitor to determine compliance. Section 63.1383 of the final

rule specifies that the owner or operator of a cold top electric furnace is required to monitor the air temperature above the molten glass surface. Section 63.1382 requires the owner or operator of a cold top electric furnace to operate the furnace such that the air temperature above the molten glass does not exceed 120 °C (250 °F) more than 10 percent of total operating time in a 6-month block reporting period.

D. Notification, Reporting, and Recordkeeping Requirements

The proposed rule specified additional records to be kept by the owner or operator in addition to the requirements of the general provisions. Editorial and clarifying revisions were made to the final notification, reporting, and recordkeeping requirements (§ 63.1386). The final rule specifies that the time that corrective action is initiated, as well as when the cause of the alarm, deviation, or exceedance was corrected, must be recorded. In addition, product density and glass pull rate were added to the list for which records are required to be kept, consistent with the monitoring provisions in § 63.1383. Other revisions were made to the recordkeeping provisions consistent with changes made in the monitoring and operating provisions.

E. Display of OMB Control Numbers

The EPA is today amending the table of currently approved information collection request (ICR) control numbers issued by OMB for various regulations. Today's amendment updates the table to list the information requirements contained in this final rule. The EPA will continue to present OMB control numbers in a consolidated table format to be codified in 40 CFR part 9 of the Agency's regulations, and in each CFR volume containing EPA regulations. The table lists the section numbers with reporting and recordkeeping requirements, and the current OMB control numbers. This listing of the OMB control numbers and its subsequent codification in the CFR satisfy the requirements of the Paperwork Reduction Act (PRA) (44 U.S.C. 3501 *et seq.*) and OMB's implementing regulations at 5 CFR part 1320.

The ICR was previously subject to public notice and comment prior to OMB approval. As a result, EPA finds there is ''good cause'' under section 553(b)(B) of the Administrative Procedure Act (5 U.S.C. 553(b)(B)) to amend this table without prior notice and comment. Due to the technical nature of the table, further notice and comment would be unnecessary.

IV. Summary of Impacts

The impacts estimated to be attributable to the final rule are the same as those estimated to be attributable to the proposed rule (62 FR 15228, March 31, 1997). Nationwide emissions of formaldehyde from existing RS and FA manufacturing lines are estimated to be 1,770 Mg/yr (1,950 ton/yr) at the current level of control. Implementation of the final rule will reduce nationwide formaldehyde emissions from existing sources by 410 Mg/yr (450 ton/yr). Emission reductions from RS manufacturing lines producing building insulation constitute the entire reduction; there are no emission reductions from FA manufacturing lines. Reduction in formaldehyde emissions from new RS manufacturing lines is estimated to be 120 Mg/yr (130 ton/yr) in the fifth year of the standard. Total reductions in formaldehyde emissions from both existing and new RS manufacturing lines, therefore will be 530 Mg/yr (580 ton/yr). Nationwide PM emissions from existing glass-melting furnaces at the current level of control, are about 750 Mg/yr (830 ton/yr). Under this rule, PM emissions from existing furnaces will be reduced by about 600 Mg/yr (660 ton/yr), of which 40 Mg/yr (50 ton/yr) is particulate matter less than 10 microns (μm) in diameter (PM–10). The PM emission reduction from new glass-melting furnaces resulting from this rule is estimated to be 160 Mg/yr (180 ton/yr) in the fifth year of the standard. Under the final rule, PM emissions from existing and new furnaces will be reduced by a total of 760 Mg/yr (840 ton/yr). Current nationwide emissions of metal HAPs from existing furnaces is 270 kg/yr (600 lb/yr). Under the final rule, metal HAP emissions from existing furnaces and new furnaces will be reduced by 9 kg/yr (20 lb/yr) and 2 kg/yr (5 lb/yr), respectively.

The EPA expects no water or solid waste impacts from the final rule. Because this standard is based on the use of baghouses, dry ESP's, thermal incinerators, and process modifications, there are no water pollution impacts. One existing RS manufacturing line uses scrubbers to control HAP emissions from forming. This rule will not affect the water pollution impact of the scrubbers. No additional sources are expected to add wet scrubbers for the control of HAP emissions. The PM captured by the baghouses added to existing uncontrolled electric furnaces will be recycled back to the furnace and no solid or hazardous waste is generated by the use of thermal incinerators. The EPA estimates that the rule will have a minor impact on energy consumption.

The total nationwide capital cost for existing glass-melting furnaces under the final rule is $3.2 million; the total annual cost is $1.5 million. These costs result from the expected addition of baghouses to seven electric glass-melting furnaces as well as the monitoring costs of bag leak detection systems installed on baghouses and temperature monitors installed on cold top electric furnaces.

The EPA estimates the nationwide capital costs of upgrading process modifications on 30 RS manufacturing lines to be $16.3 million, with annual costs of $4.8 million. None of the existing curing ovens that are uncontrolled for HAPs will have to add an incinerator. None of the FA manufacturing lines subject to the rule will require additional controls to comply with the emission standards. Therefore, no control costs are associated with complying with the final rule for FA manufacturing lines. For all RS and FA manufacturing lines subject to the standard, there is a one-time cost of $15,000 per line to establish the process parameter values for compliance monitoring. Because the parameters that the owner or operator is required to monitor on RS and FA manufacturing lines are currently monitored by the industry, no additional costs will be incurred for monitoring beyond the one-time cost of $15,000 per line.

Total nationwide capital cost for the standard is estimated to be $19.5 million and annual nationwide cost is estimated to be $6.3 million/yr, including installation, operation, and maintenance of emission control and monitoring systems.

The economic analysis of the rule finds impacts at the facility and market-level to be modest. The average market price increases for both structural and nonstructural wool fiberglass are expected to be less than 0.5 percent. The resultant decreases in quantity demanded range from 0.17 percent for structural insulation markets to 0.22 percent for nonstructural insulation markets. None of the affected firms are classified as small businesses and no closures are predicted.

V. Summary of Responses to Major Comments

The EPA received nine comment letters on the proposed NESHAP for wool fiberglass manufacturing. A copy of each comment letter is available for public inspection in the docket for the rulemaking (Docket No. A–95–24; see

the **ADDRESSES** section of this preamble for information on inspecting the docket). The EPA has had follow-up discussions with commenters regarding specific issues initially raised in their written comments. Copies of correspondence and other information exchanged between the EPA and the commenters during the post-comment period are available for public inspection in the docket for the rulemaking.

All comments received by EPA were reviewed and carefully considered by the Agency. The EPA made changes to the rule where appropriate. A summary of responses to major comments received on the proposed rule is presented below. Additional discussion of the EPA's responses to public comments is presented in the document ''Summary of Public Comments and Responses on Wool Fiberglass Manufacturing NESHAP'' (Docket A–95–24, Item V–C–2).

A. Selection of Pollutants

Comment: Two commenters stated that the issues of fine mineral fibers as HAP and the health effects of wool fiberglass particles greater than 1 micron in diameter should be addressed. One commenter stated that because the definition of fine mineral fibers is under review in response to new data on health effects and respirability, the EPA should address in the final preamble the possibility of a new definition for fine mineral fibers and its effects on the NESHAP.

Response: The rule does not include emission limits for fine mineral fibers at wool fiberglass manufacturing facilities because EPA determined that the affected sources do not emit ''fine mineral fibers,'' as presently defined by the CAA. Fiberglass emissions from the affected manufacturing lines at wool fiberglass manufacturing facilities consist of clumps of fibers that are much larger than 10 micrometers in diameter. The CAA, by contrast, defines ''fine mineral fibers'' to include mineral fiber emissions from facilities manufacturing or processing glass, rock, or slag fibers (or other mineral derived fibers) of average diameter 1 micrometer or less. (See section 112(b)(1)n.3.)

B. Selection of Emission Limits

Comment: One commenter stated that the EPA determined the MACT floor for glass-melting furnaces inappropriately by establishing equipment standards as the MACT floor rather than a straightforward determination of numerical MACT floors as specified in section 112(d)(3) of the CAA. Such an approach, according to the commenter, has allowed the EPA to use emissions data from the worst performing units to set emission limits that are no more stringent than the nearly 20-year-old NSPS for glass-melting furnaces. The commenter believes that new baghouses and precipitators, and low-cost upgrades of existing ones, would allow much more stringent emission limits. The commenter stated that the EPA should base the MACT floors on the numerical emissions of the best performing 12 percent for existing sources and the best performing source for new sources and revise the emission limits to be consistent with the more stringent floors.

Response: In determining the MACT floor, the EPA is not limited merely to examining emissions test data from the best performing sources and calculating the numeric mean of such sources' emission rates, because the test data may not translate directly to truly achievable standards. Rather, the Agency has taken alternative approaches to establishing MACT floors in the past, depending on the type, quality, and applicability of available emissions information. (See 62 FR 49051, 49060 (September 18, 1997) (describing various alternatives)).

Among the standard options the EPA may follow is to establish the floor in consideration of the emissions control technology used by the best performing sources. Specifically, the Agency could establish the new source MACT floor based on the technology employed by the best-controlled similar source and the existing source MACT floor based on the technology used by the average of the best-performing 12 percent of sources (or, in the case of categories with fewer than 30 sources, the average of the best-performing five sources). The EPA would then calculate a numeric MACT emission limit that is achievable in practice by sources employing that technology, in view of process and air pollution control device variability.

The EPA followed this technology-driven approach in the present rulemaking. Available emissions information indicates that both baghouses and ESP's are equally effective in controlling PM emissions from glass-melting furnaces, and that the best performing sources in the wool fiberglass source category employ such technology. Accordingly, the Agency determined that either of these technologies, when well-designed and well-operated, would form the basis of the MACT floor for controlling emissions from glass-melting furnaces in this source category. The EPA then sought, consistent with the CAA, to express the MACT floor in terms of a numeric emissions limit. To do so, it evaluated existing test data from wool fiberglass facilities controlling glass-melting furnace emissions with baghouses and ESP's. Because the measured emission rates varied, even though each of the sources had well-operated and maintained air pollution control equipment, the Agency concluded that the measured rates were indicative of equipment and process variability. The EPA therefore established the MACT floor at an emission level achievable by the best performing technology, after accounting for normal operating variability.

The Agency's approach in this rulemaking to determine the applicable MACT floors is consistent with the CAA. The CAA requires a standard that is ''achievable'' (42 U.S.C. 112(d)(2) (''Emission standards * * * shall require the maximum degree of reductions in emissions * * * that the Administrator * * * determines is achievable * * * '')). However, the commenter's insistence on setting the MACT floor based solely on a numeric average would require the Agency to establish a standard that, in light of normal and unavoidable control equipment and process variability, would not be achievable consistently by the best performing sources in the category. The EPA's method in the present rulemaking, by contrast, heeds Congress's attention to achievability and is a prudent exercise of the discretion the CAA grants the Agency ''to use its best engineering judgment in collecting and analyzing the (available emissions) data, and in assessing the data's comprehensiveness, accuracy, and *variability*, in order to determine which sources achieve the best emission reductions.'' (59 FR 29196, 29199 (June 6, 1994)) (emphasis added). See also *National Lime Association* v. *E.P.A.*, 627 F.2d 416, 431 n. 46 (D.C. Cir. 1980) (''to be achievable, we think a uniform standard must be capable of being met under most adverse conditions which can reasonably be expected to recur'').

Comment: Two commenters stated that the EPA is not limited to setting emission limits at the MACT floors and thermal and catalytic incinerators could provide cost-effective 98 to 99 percent emission reductions on RS forming, curing, and cooling and FA forming and curing. According to one commenter, the emission limits for flame attenuation manufacturing lines are much too high; more appropriate formaldehyde emission limits are 0.068–0.078 lb/ton. Another commenter stated that emissions as low as 0.02 kg/Mg for RS manufacturing, 0.13 kg/Mg for heavy-density flame attenuation

manufacturing, and 0.11 kg/Mg for pipe flame attenuation manufacturing could be achieved if catalytic oxidation were used to control forming, curing, and cooling processes. According to one commenter, the EPA should also consider other creative control technology applications, for example, ducting multiple sources, such as forming and curing, to a single control unit at a much lower cost than separate controls on individual process units while achieving 98–99 percent reduction in forming and curing oven emissions. One commenter also stated that the EPA has ignored the use of carbon-and zeolite-based concentrators, which can reduce exhaust volumes thereby reducing the size and cost of required control devices. According to this commenter, such concentrators can reduce exhaust volumes to be treated at least tenfold and sometimes much greater allowing the use of small control devices after forming and curing. Alternatively, the concentrated exhaust could be ducted to the curing oven or curing oven control device, thus allowing for low-cost control of emissions from the entire wool fiberglass manufacturing line.

Response: Even though incineration is demonstrated on rotary spin curing ovens and is the MACT floor for new and existing rotary spin curing ovens, incineration is not demonstrated for rotary spin forming or for flame attenuation forming or flame attenuation curing. Further, concentrators are not demonstrated in this industry for any process. Although not demonstrated, the EPA considered the beyond-the-floor control option of incineration for both rotary spin forming and flame attenuation forming and curing processes. According to an analysis of the cost effectiveness of beyond-the-floor controls for RS manufacturing lines, the cost effectiveness of controlling formaldehyde emissions from forming using incineration is $183,000 per ton of formaldehyde reduction. On FA manufacturing lines producing heavy-density products, the cost effectiveness of controlling formaldehyde emissions using incineration is $1.95 million per ton of formaldehyde reduction for forming processes and $13.5 million per ton of formaldehyde reduction for curing processes. On FA manufacturing lines producing pipe products, the cost effectiveness of controlling formaldehyde emissions using incineration is $2.7 million per ton of formaldehyde reduction for forming processes and $42.3 million per ton of formaldehyde reduction for curing processes. At this time, the EPA considers that the cost effectiveness of these beyond-the-floor controls are not reasonable. Therefore, the EPA rejected beyond-the-floor controls and set emission standards at the MACT floor level.

Comment: A commenter stated that, in light of formaldehyde classification as a Class B1, probable human carcinogen, the EPA should reconsider its use of the largest emission rates as the emission limits for the flame attenuation lines producing pipe products and heavy-density products. According to one commenter, the emission limits for flame attenuation manufacturing lines are much too high with more appropriate formaldehyde emission limits being 0.068–0.078 lb/ton. Another commenter stated that emissions as low as 0.13 kg/Mg for heavy-density flame attenuation manufacturing, and 0.11 kg/Mg for pipe flame attenuation manufacturing could be achieved if catalytic oxidation were used to control forming, curing, and cooling processes.

Response: In establishing emission limits for affected FA manufacturing lines, the EPA followed the approach used for glass-melting furnaces. Process modifications constitute the pollution control technology used by the best performing sources, and each of the facilities currently producing pipe insulation and heavy density products employ an identical level of process modifications on their FA manufacturing lines. Nevertheless, the measured emission rates of formaldehyde from these sources varied. Because the same degree of pollution control had different emission rates, the Agency concluded that operational variability accounted for the differences and factored such variability into the promulgated emission standard by setting the MACT floor at a level achievable in practice by sources using the identified technology.

Comment: Because the EPA is allowing averaging of emissions across the various units making up the manufacturing line, one commenter stated that this tends to increase emissions above those associated with emission limits on separate process units and that EPA should set emission limits more stringent than the sum of the floor limits rather than allow averaging.

Response: In setting emission limits for rotary spin and flame attenuation manufacturing lines, the EPA used available emissions data for each process unit (forming, curing, and cooling for rotary spin lines, and forming and curing for flame attenuation lines) to determine the appropriate MACT floor for each process unit in the line. The Agency then summed emissions from the MACT floors to create a resultant line-based MACT floor emission limit. Therefore, the EPA disagrees that these ''line'' limits are less stringent than the limits that would have been established for individual process units if the source subject to MACT had been defined more narrowly. For instance, because the MACT floor for cooling on rotary spin lines and for curing on flame attenuation lines is no control, the EPA may not have set emission limits for these sources if limits were set on a unit-by-unit basis. Thus, potentially higher emissions would have been allowed than are currently being allowed under this rule.

C. Monitoring

Comment: Several comments were received concerning the use of bag leak detectors for monitoring baghouses used to control emissions from glass-melting furnaces. One commenter stated that because the industry standard for sensitivity of bag leak detectors is 0.0005 gr/dscf, the sensitivity cited in the rule should be changed from 0.0004 gr/dscf to 0.0005 gr/dscf.

According to another commenter, the requirements to install and operate bag leak detectors according to EPA guidance (§ 63.1384(b)(5)) will be difficult to enforce. The commenter further stated that if EPA wants the guidance to be followed, it should be contained in a rule; if not, it should be in the preamble as recommended practice.

Another commenter asked if a source would be in violation of the standard if the alarm on the bag leak detector is activated more than 10 percent of the total operating time during a 6-month block reporting period.

Response: After reviewing technical data from a supplier of dust detection equipment and reviewing other EPA standards that require bag leak detectors for consistency, EPA has modified the required sensitivity level to ''0.0044 gr/dscf or less.'' This change does not alter the intended function of the bag leak detector, and is consistent with the industry standard for sensitivity and other EPA standards.

Although EPA understands, as the one commenter indicated, that enforcement may be more difficult, there are currently no performance specifications available for bag leak detectors. EPA guidance on the use of triboelectric bag leak detectors has been developed and is cited in the rule along with information on its availability.

In the proposed and final rules, the source would not be in violation of the standard if the alarm on the bag leak detector is activated more than 10 percent of the total operating time during a 6-month block reporting period. The EPA issued a supplemental proposal (64 FR 7149, February 12, 1999) for wool fiberglass and other source categories which, along with other compliance issues, deals with the question as to the existence of a violation when the bag leak detector alarm is activated and how it is enforced. The EPA will consider all comments on the supplemental proposal and will amend this final rule in a future action as appropriate.

Comment: For clarity with State agencies, one commenter recommended that the requirement in § 63.1386(e) to ''continuously monitor and record'' as it applies to glass pull rate be defined to mean to install, operate and maintain pull rate monitoring and recording equipment per the written operations, maintenance, and monitoring plan.

Response: Based on additional information provided by the commenter, EPA learned that the commenter would like the rule to clarify the monitoring and recording frequency associated with continuous monitors for glass pull rate. According to the commenter, the process is very steady and there is not a need for minute-by-minute monitoring and recordkeeping. EPA has revised the rule to require that on existing glass-melting furnaces with continuous monitors and on all new glass-melting furnaces, the glass pull rate must be monitored and recorded on an hourly basis and every 4 hours an average is to be calculated for purposes of determining compliance. At any time that a 4-hour average pull rate exceeds the average pull rate established during the performance test by greater than 20 percent, corrective action must be initiated within 1 hour. If a 20 percent or more exceedance of the pull rate occurs for more than 5 percent of the total operating time in the 6-month block reporting period, a QIP is required. The final rule requires the owner operate the glass-melting furnace so that the glass pull rate does not exceed, by more than 20 percent, the established maximum glass pull rate for more than 10 percent of the total operating time in the 6-month block reporting period.

As a result of this comment, the EPA examined the other monitoring provisions and made similar clarifying changes throughout the monitoring section as they pertain to monitoring frequency and averaging period.

D. Performance Tests

Comment: One commenter recommended revisions to the monitoring requirements of § 63.1386(g)(2) to clarify that if changes are made in the binder formulation that would not result in an increase in HAP emissions, such as the use of resin extenders, additional emissions testing is not required. The commenter explained that binder formulations are developed and controlled centrally by technical experts at each company and are not subject to modification at each plant. According to this commenter, normal practice is for any new binder formulation to be supported by additional emission tests. For reasons of material availability and cost reduction, the commenter explained that the binder formulation specification allows some flexibility for substituting resin extenders. During subsequent discussions with the commenter, it was explained that extenders replace components of the binder and that urea and lignin are used as extenders and replace some of the formaldehyde and phenol in the binder. The extenders act to dilute the binder and because the rate of application of the extended binder does not change, the emissions of formaldehyde and phenol are decreased.

Response: Based on this comment as well as additional information supplied by the commenter on the use of extenders and their effects on formaldehyde emissions, the EPA has revised the rule to permit the addition of the extenders urea and lignin in the binder formulations without the need to perform additional emission testing.

During discussions to obtain additional information from the commenter on this issue, the commenter was also concerned that the occasional switching of resin suppliers where the resins are made to the same specifications, may be interpreted by enforcement agencies as a change in resin and require additional emissions testing. The EPA does not intend for additional emission testing to be performed where a facility switches resin suppliers as long as the resin from the new supplier is made to the same product specifications as that used during the performance test.

VI. Administrative Requirements

A. Docket

The docket is intended to be an organized file of the administrative records compiled by EPA. The docket is a dynamic file because information is added throughout the rulemaking development. The docketing system is intended to allow members of the public and industries involved to readily identify and locate documents so that they can effectively participate in the rulemaking process. Along with the proposed and promulgated standards and their preambles, the docket will contain the record in case of judicial review. (See section 307(d)(7)(A) of the CAA.) The location of the official rulemaking record, including all public comments received on the proposed rule, is in the **ADDRESSES** section at the beginning of this preamble.

B. Executive Order 12866—Regulatory Planning and Review

Under Executive Order 12866 (58 FR 51735, October 4, 1993), the EPA must determine if a regulatory action is ''significant,'' and therefore subject to review by OMB and the requirements of the Executive Order. The Executive Order defines ''significant regulatory action'' as one that is likely to result in a rule that may:

(1) Have an annual effect on the economy of $100 million or more or adversely affect in a material way the economy, a sector of the economy, productivity, competition, jobs, the environment, public health or safety, or State, local, or tribal governments or communities;

(2) Create a serious inconsistency or otherwise interfere with an action taken or planned by another agency;

(3) Materially alter the budgetary impact of entitlements, grants, user fees, or loan programs, or the rights and obligation of recipients thereof; or

(4) Raise novel legal or policy issues arising out of legal mandates, the President's priorities, or the principles set forth in the Executive Order.

It has been determined that this final rule is not a ''significant regulatory action'' under the terms of the Executive Order and is therefore not subject to OMB review.

C. Executive Order 12875—Enhancing the Intergovernmental Partnership

Under Executive Order 12875, the EPA may not issue a regulation that is not required by statute and that creates a mandate upon a State, local or tribal government, unless the Federal government provides the funds necessary to pay the direct compliance costs incurred by those governments, or the EPA consults with those governments. If the EPA complies by consulting, Executive Order 12875 requires the EPA to provide to the OMB a description of the extent of the EPA's prior consultation with representatives of affected State, local and tribal governments, the nature of their concerns, copies of any written

communications from the governments, and a statement supporting the need to issue the regulation. In addition, Executive Order 12875 requires the EPA to develop an effective process permitting elected officials and other representatives of State, local and tribal governments ''to provide meaningful and timely input in the development of regulatory proposals containing significant unfunded mandates.''

Today's rule does not create a mandate on State, local or tribal governments. The rule does not impose any enforceable duties on State, local or tribal governments, because they do not own or operate any sources that would be subject to this rule. Accordingly, the requirements of section 1(a) of Executive Order 12875 do not apply to this rule.

D. Unfunded Mandates Reform Act

Title II of the Unfunded Mandates Reform Act of 1995 (UMRA), Pub. L. 104–4, establishes requirements for Federal agencies to assess the effects of their regulatory actions on State, local, and tribal governments and the private sector. Under section 202 of the UMRA, the EPA generally must prepare a written statement, including a cost-benefit analysis, for proposed and final rules with ''Federal mandates'' that may result in expenditures by State, local, and tribal governments, in the aggregate, or by the private sector, of $100 million or more in any one year. Before promulgating an EPA rule for which a written statement is needed, section 205 of the UMRA generally requires the EPA to identify and consider a reasonable number of regulatory alternatives and adopt the least costly, most cost-effective or least burdensome alternative that achieves the objectives of the rule. The provisions of section 205 do not apply when they are inconsistent with applicable law. Moreover, section 205 allows the EPA to adopt an alternative other than the least costly, most cost-effective or least burdensome alternative if the Administrator publishes with the final rule an explanation why that alternative was not adopted. Before the EPA establishes any regulatory requirements that may significantly or uniquely affect small governments, it must have developed under section 203 of the UMRA a small government agency plan. The plan must provide for notifying potentially affected small governments, enabling officials of affected small governments to have meaningful and timely input in the development of EPA regulatory proposals with significant Federal intergovernmental mandates, and informing, educating, and advising small governments on compliance with the regulatory requirements.

The EPA has determined that this rule does not contain a Federal mandate that may result in expenditures of $100 million or more for State, local, and tribal governments, in the aggregate, or the private sector in any one year. The EPA has determined that the total nationwide capital cost for the standard is approximately $19.5 million and the annual nationwide cost is approximately $6.3 million/yr. This rule is based partially on pollution prevention alternatives and on a manufacturing line approach. It is the least costly and burdensome approach for industry since the purchase of add-on control devices will be avoided by most of the industry. The only costs to State and local governments are those associated with implementing this standard through the permitting process, and these costs are recouped through permit fees. Thus, today's rule is not subject to the requirements of sections 202 and 205 of the UMRA. In addition, the EPA has determined that this rule contains no regulatory requirements that might significantly or uniquely affect small governments because it does not impose any enforceable duties on small governments; such governments own or operate no sources subject to these rules and therefore would not be required to purchase control systems to meet the requirements of the rule.

E. Regulatory Flexibility

The Regulatory Flexibility Act (RFA) generally requires an agency to conduct a regulatory flexibility analysis of any rule subject to notice and comment rulemaking requirements unless the agency certifies that the rule will not have a significant economic impact on a substantial number of small entities. Small entities include small businesses, small not-for-profit enterprises, and small governmental jurisdictions.

EPA has determined that it is not necessary to prepare a regulatory flexibility analysis in connection with this final rule. EPA has also determined that this rule will not have a significant impact on a substantial number of small entities because no company that owns sources in the source category meets the criteria for small business. The Small Business Administration defines ''small business,'' as the term applies to SIC 3296, as a firm with fewer than 750 employees. None of the firms in the industry have fewer than 750 employees and, thus, are not small businesses by this criterion.

F. Submission to Congress and the General Accounting Office

The Congressional Review Act, 5 U.S.C. 801 *et seq.*, as added by the Small Business Regulatory Enforcement Fairness Act of 1996, generally provides that before a rule may take effect, the agency promulgating the rule must submit a rule report, which includes a copy of the rule, to each House of the Congress and to the Comptroller General of the United States. EPA will submit a report containing this rule and other required information to the U.S. Senate, the U.S. House of Representatives, and the Comptroller General of the United States prior to publication of the rule in the **Federal Register**. This action is not a ''major rule'' as defined by 5 U.S.C. 804(2). This rule will be effective June 14, 1999.

G. Paperwork Reduction Act

The OMB has approved the information collection requirements contained in this rule under the provisions of the PRA, 44 U.S.C. 3501 *et seq.* and has assigned OMB control number 2060–0359.

The information collection requirements include the notification, reporting, and recordkeeping requirements of the NESHAP general provisions, authorized under section 114 of the CAA, which are mandatory for all owners or operators subject to national emission standards. All information submitted to the EPA for which a claim of confidentiality is made is safeguarded according to Agency policies in 40 CFR part 2, subpart B. This rule does not require any notifications or reports beyond those required by the general provisions. Subpart NNN does require additional records of specific information needed to determine compliance with the rule. These include records of: (1) Any bag leak detection system alarm, including the date and time, with a brief explanation of the cause of the alarm and the corrective action taken; (2) ESP parameter values, such as secondary voltage for each electrical field including any deviation outside the limits established during the performance test and a brief explanation of the cause of the deviation and the corrective action taken; (3) air temperature above the surface of the molten glass of a cold top electric furnace that does not use an add-on control device for PM emission control, including any air temperature above 120 °C (250 °F) with a brief explanation of the cause and the corrective action taken; (4) operating parameter(s) for uncontrolled glass melting furnace (that

is not a cold top electric furnace) that does not use an add-on control device for the control of PM emissions including any exceedance of the level established during the performance test and a brief explanation of the cause of the exceedance and the corrective action taken; (5) the free-formaldehyde content of the resin being used; (6) the formulation of the binder being used; (7) the product LOI and product density for each 8-hour period on a RS or FA manufacturing line subject to the NESHAP; (8) forming process modification parameter(s), including any period when the parameter level(s) deviate from the level(s) established during the performance test and a brief explanation of the cause of the deviation and the corrective action taken; (9) pressure drop, liquid flow rate, and information on chemical additives to the scrubbing liquid, including any period when there is a deviation from the levels established during the performance tests and a brief explanation of the cause and the corrective action taken; (10) incinerator operating temperature, including any 3-hour block period when the temperature falls below the level established during the performance test, and the results of the annual inspection, including any problems discovered during the inspection, with a brief explanation of the cause and, the corrective action taken; and (11) glass pull rate, including any period when the pull rate exceeds the average pull rate established during the performance test by more than 20 percent, with a brief explanation of the cause of the exceedance, the corrective action taken, and the time the corrective action was initiated. All records documenting corrective actions must include the time of the alarm, deviation, or exceedance and the time that the corrective action is initiated as well as when the cause of the alarm, deviation, or exceedance is corrected. Each of these information requirements is needed to determine compliance with the standards.

The annual public reporting and recordkeeping burden to industry for this collection is estimated at 17,100 labor hours per year at an annual cost of $548,000. This estimate includes a one-time performance test and report (with repeat tests where needed); one-time preparation of a startup, shutdown, and malfunction plan with semiannual reports of any event in which the procedures in the plan were not followed; semiannual excess emissions reports; notifications; and recordkeeping. The annualized capital cost associated with monitoring requirements is estimated at $41,000. The operation and maintenance cost is estimated at $3,000/yr.

Burden means the total time, effort, or financial resources expended by persons to generate, maintain, retain, or disclose or provide information to or for a Federal agency. This includes the time needed to review instructions; develop, acquire, install, and utilize technology and systems for the purpose of collecting, validating, and verifying information, processing and maintaining information, and disclosing and providing information; adjust the existing ways to comply with any previously applicable instructions and requirements; train personnel to be able to respond to a collection of information; search data sources; complete and review the collection of information; and transmit or otherwise disclose the information.

An Agency may not conduct or sponsor, and a person is not required to respond to, a collection of information unless it displays a currently valid OMB control number. The OMB control numbers for EPA's regulations are listed in 40 CFR part 9 and 48 CFR chapter 15. The EPA is amending the table in 40 CFR part 9 of currently approved ICR control numbers issued by OMB for various regulations to list the information requirements contained in this final rule.

H. Pollution Prevention Act

The Pollution Prevention Act of 1990 states that pollution should be prevented or reduced at the source whenever feasible. The emission standards for RS and FA manufacturing lines subject to the standard are formulated as line standards, i.e., the sum of the individual forming, curing, and cooling MACT floor emission levels for RS manufacturing lines and forming and curing MACT floor emission levels for certain FA manufacturing lines. By formulating the standard as a line standard, tradeoffs are allowed for existing facilities that will accomplish the same environmental results at lower costs and will encourage process modifications and pollution prevention alternatives. According to the industry, new RS manufacturing lines may be able to meet the line standard without the use of costly incinerators with their energy and other environmental impacts, such as increased nitrogen oxides (NO_X) and sulfur oxides (SO_X) emissions, by incorporating pollution prevention measures, such as binder reformulation and improved binder application efficiency. Pollution prevention alternatives will also increase binder utilization efficiency and reduce production costs for industry. In selecting the format of the emission standard for emissions from manufacturing lines, the EPA considered various alternatives such as setting separate emission limits for each process, i.e., forming, curing, and cooling. A line standard gives the industry greater flexibility in complying with the emission limits and is the least costly because industry can avoid the capital and annual operating and maintenance costs associated with the purchase of add-on control equipment by using pollution prevention measures.

I. National Technology Transfer and Advancement Act

Section 12(d) of the National Technology Transfer and Advancement Act (NTTAA), Pub. L. 104–113 (March 7, 1996), directs the EPA to use voluntary consensus standards in regulatory and procurement activities unless to do so would be inconsistent with applicable law or otherwise impractical. Voluntary consensus standards are technical standards (such as materials specifications, test methods, sampling procedures, and business practices) which are developed or adopted by voluntary consensus standard bodies. Where available and potentially applicable voluntary consensus standards are not used by EPA, the Act requires the Agency to provide Congress, through the OMB, an explanation for not using such standards. This section summarizes the EPA's response to the requirements of the NTTAA for the analytical test methods promulgated as part of this final rule.

Consistent with the NTTAA, the EPA conducted searches to identify voluntary consensus standards for the EPA's emissions sampling and analysis reference methods and industry recommended materials analysis procedures cited in this rule. Candidate voluntary consensus standards for materials analysis were identified for product loss on ignition (LOI), product density, and free formaldehyde content. Consensus comments provided by industry experts were that the candidate standards did not meet industry materials analysis requirements. Therefore, EPA has determined these voluntary consensus standards were impractical for the wool fiberglass manufacturing NESHAP. The EPA, in consultation with the North American Insulation Manufacturers Association (NAIMA), has formulated industry-specific materials analysis, consensus standards which are promulgated in this rule.

The EPA search to identify voluntary consensus standards for the EPA's emissions sampling and analysis reference methods cited in this rule identified 17 candidate standards that appeared to have possible use in lieu of EPA standard reference methods. However, after reviewing available standards, EPA determined that 12 of the candidate consensus standards identified for measuring emissions of the HAPs or surrogates subject to emission standards in the rule would be not be practical due to lack of equivalency, documentation, validation data and other important technical and policy considerations. Five of the remaining candidate consensus standards are new standards under development that EPA plans to follow, review and consider adopting at a later date. This rule requires standard EPA emission test methods known to the industry and States. Approved alternative methods also may be used with prior EPA approval.

J. Executive Order 13045—Protection of Children From Environmental Health Risks and Safety Risks

Executive Order 13045 (62 FR 19885, April 23, 1997) applies to any rule that(1) is determined to be ''economically significant'' as defined under Executive Order 12866, and (2) concerns the environmental health or safety risk that the EPA has reason to believe may have a disproportionate effect on children. If the regulatory action meets both criteria, the Agency must evaluate the environmental health or safety effects of the planned rule on children and explain why the planned regulation is preferable to other potentially effective and reasonably feasible alternatives considered by the Agency.

The EPA interprets Executive Order 13045 as applying only to those regulatory actions that are based on health or safety risks, such that the analysis required under section 5–501 of the Order has the potential to influence the regulation. This final rule is not subject to Executive Order 13045 because it is not an economically significant regulatory action as defined by Executive Order 12866, and it is based on technology performance and not on health or safety risks.

K. Executive Order 13084—Consultation and Coordination With Indian Tribal Governments

Under Executive Order 13084, the EPA may not issue a regulation that is not required by statue, that significantly or uniquely affects the communities of Indian tribal governments, and that imposes substantial direct compliance costs on those communities, unless the Federal government provides the funds necessary to pay the direct compliance costs incurred by the tribal governments, or the EPA consults with those governments. If the EPA complies by consulting, Executive Order 13084 requires the EPA to provide to the OMB, in a separately identified section of the preamble to the rule, a description of the extent of EPA's prior consultation with representatives of affected tribal governments, a summary of the nature of their concerns, and a statement supporting the need to issue the regulation. In addition, Executive Order 13084 requires the EPA to develop an effective process permitting elected officials and other representatives of Indian tribal governments ''to provide meaningful and timely input in the development of regulatory policies on matters that significantly or uniquely affect their communities.''

Today's rule does not significantly or uniquely affect the communities of Indian tribal governments. No wool fiberglass manufacturing facilities are owned or operated by Indian tribal governments. Accordingly, the requirements of section 3(b) of Executive Order 13084 do not apply to this rule.

List of Subjects

40 CFR Part 9

Environmental protection, Reporting and recordkeeping requirement

40 CFR Part 63

Environmental protection, Air pollution control, Hazardous substances, Reporting and recordkeeping requirements, Wool fiberglass manufacturing.

Dated: May 13, 1999.

Carol M. Browner,

Administrator.

For the reasons set out in the preamble, parts 9 and 63 of title 40, chapter I of the Code of Federal Regulations are amended as follows:

PART 9—OMB APPROVALS UNDER THE PAPERWORK REDUCTION ACT

1. The authority citation for part 9 continues to read as follows:

Authority: 7 U.S.C. 135 *et seq.*, 136–136y; 15 U.S.C. 2001, 2003, 2005, 2006, 2601–2671; 21 U.S.C. 331j, 346a, 348; 31 U.S.C. 9701; 33 U.S.C. 1251 *et. seq.*, 1311, 1313d, 1314, 1318, 1321, 1326, 1330, 1342, 1344, 1345 (d) and (e), 1361; E.O. 11735, 38 FR 21243, 3 CFR, 1971–1975 Comp. p. 973; 42 U.S.C. 241, 242b, 243, 246, 300f, 300g, 300g–1, 300g–2, 300g–3, 300g–4, 300g–5, 300g–6, 300j–1, 300j–2, 300j–3, 300j–4, 300j–9, 1857 *et seq.*, 6901–6992k, 7401–7671q, 7542, 9601–9657, 11023, 11048.

2. In § 9.1, the table is amended by adding new entries in numerical order under the indicated heading to read as follows:

§ 9.1 OMB approvals under the Paperwork Reduction Act.

* * * * *

40 CFR citation	OMB control No.
* * * * *	
National Emission Standards for Hazardous Air Pollutants for Source Categories [3]	
* * * * *	
63.1383	2060–0359
63.1386	2060–0359
63.1387	2060–0359
* * * * *	

[3] The ICRs referenced in this section of the table encompass the applicable general provisions contained in 40 CFR part 63, subpart A, which are not independent information collection requirements.

* * * * *

PART 63—NATIONAL EMISSION STANDARDS FOR HAZARDOUS AIR POLLUTANTS FOR SOURCE CATEGORIES

3. The authority citation for part 63 continues to read as follows:

Authority: 42 U.S.C. 7401 *et seq.*

4. Part 63 is amended by adding subpart NNN consisting of §§ 63.1380 through 63.1399 to read as follows:

Subpart NNN—National Emission Standards for Hazardous Air Pollutants for Wool Fiberglass Manufacturing

Sec.

63.1380 Applicability.
63.1381 Definitions.
63.1382 Emission standards.
63.1383 Monitoring requirements.
63.1384 Performance test requirements.
63.1385 Test methods and procedures.
63.1386 Notification, recordkeeping, and reporting requirements.
63.1387 Compliance dates.
63.1388—63.1399 [Reserved]

Table 1 to Subpart NNN of part 63—Applicability of general provisions (40 CFR part 63, subpart A) to subpart NNN.

Appendix A to Subpart NNN of part 63—Method for the determination of LOI

Appendix B to Subpart NNN of part 63—Free formaldehyde analysis of insulation resins by hydroxylamine hydrochloride

Appendix C to Subpart NNN of part 63—Method for the determination of product density

Subpart NNN—National Emission Standards for Hazardous Air Pollutants for Wool Fiberglass Manufacturing

§ 63.1380 Applicability.

(a) Except as provided in paragraphs (b) and (c) of this section, the requirements of this subpart apply to the owner or operator of each wool fiberglass manufacturing facility that is a major source or is located at a facility that is a major source.

(b) The requirements of this subpart apply to emissions of hazardous air pollutants (HAPs), as measured according to the methods and procedures in this subpart, emitted from the following new and existing sources at a wool fiberglass manufacturing facility subject to this subpart:

(1) Each new and existing glass-melting furnace located at a wool fiberglass manufacturing facility;

(2) Each new and existing rotary spin wool fiberglass manufacturing line producing a bonded wool fiberglass building insulation product; and

(3) Each new and existing flame attenuation wool fiberglass manufacturing line producing a bonded pipe product and each new flame attenuation wool fiberglass manufacturing line producing a bonded heavy-density product.

(c) The requirements of this subpart do not apply to a wool fiberglass manufacturing facility that the owner or operator demonstrates to the Administrator is not a major source as defined in § 63.2.

(d) The provisions of this part 63, subpart A that apply and those that do not apply to this subpart are specified in Table 1 of this subpart.

§ 63.1381 Definitions.

Terms used in this subpart are defined in the Clean Air Act, in § 63.2, or in this section as follows:

Bag leak detection system means systems that include, but are not limited to, devices using triboelectric, light scattering, and other effects to monitor relative or absolute particulate matter (PM) emissions.

Bonded means wool fiberglass to which a phenol-formaldehyde binder has been applied.

Building insulation means bonded wool fiberglass insulation, having a loss on ignition of less than 8 percent and a density of less than 32 kilograms per cubic meter (kg/m^3) (2 pounds per cubic foot [lb/ft^3]).

Cold top electric furnace means an all-electric glass-melting furnace that operates with a temperature of 120 °C (250 °F) or less as measured at a location 46 to 61 centimeters (18 to 24 inches) above the molten glass surface.

Flame attenuation means a process used to produce wool fiberglass where molten glass flows by gravity from melting furnaces, or pots, to form filaments that are drawn down and attenuated by passing in front of a high-velocity gas burner flame.

Glass-melting furnace means a unit comprising a refractory vessel in which raw materials are charged, melted at high temperature, refined, and conditioned to produce molten glass. The unit includes foundations, superstructure and retaining walls, raw material charger systems, heat exchangers, melter cooling system, exhaust system, refractory brick work, fuel supply and electrical boosting equipment, integral control systems and instrumentation, and appendages for conditioning and distributing molten glass to forming processes. The forming apparatus, including flow channels, is not considered part of the glass-melting furnace.

Glass pull rate means the mass of molten glass that is produced by a single glass-melting furnace or that is used in the manufacture of wool fiberglass at a single manufacturing line in a specified time period.

Hazardous Air Pollutant (HAP) means any air pollutant listed in or pursuant to section 112(b) of the Clean Air Act.

Heavy-density product means bonded wool fiberglass insulation manufactured on a flame attenuation manufacturing line and having a loss on ignition of 11 to 25 percent and a density of 8 to 48 kg/m^3 (0.5 to 3 lb/ft^3).

Incinerator means an enclosed air pollution control device that uses controlled flame combustion to convert combustible materials to noncombustible gases.

Loss on ignition (LOI) means the percent decrease in weight of wool fiberglass after it has been ignited. The LOI is used to monitor the weight percent of binder in wool fiberglass.

Manufacturing line means the manufacturing equipment for the production of wool fiberglass that consists of a forming section where molten glass is fiberized and a fiberglass mat is formed and which may include a curing section where binder resin in the mat is thermally set and a cooling section where the mat is cooled.

New source means any affected source the construction or reconstruction of which is commenced after March 31, 1997.

Pipe product means bonded wool fiberglass insulation manufactured on a flame attenuation manufacturing line and having a loss on ignition of 8 to 14 percent and a density of 48 to 96 kg/m^3 (3 to 6 lb/ft^3).

Rotary spin means a process used to produce wool fiberglass building insulation by forcing molten glass through numerous small orifices in the side wall of a spinner to form continuous glass fibers that are then broken into discrete lengths by high-velocity air flow. Any process used to produce bonded wool fiberglass building insulation by a process other than flame attenuation is considered rotary spin.

Wool fiberglass means insulation materials composed of glass fibers made from glass produced or melted at the same facility where the manufacturing line is located.

Wool fiberglass manufacturing facility means any facility manufacturing wool fiberglass on a rotary spin manufacturing line or on a flame attenuation manufacturing line.

§ 63.1382 Emission standards

(a) *Emission limits*—(1) *Glass-melting furnaces.* On and after the date the initial performance test is completed or required to be completed under § 63.7 of this part, whichever date is earlier, the owner or operator shall not discharge or cause to be discharged into the atmosphere in excess of 0.25 kilogram (kg) of particulate matter (PM) per megagram (Mg) (0.5 pound [lb] of PM per ton) of glass pulled for each new or existing glass-melting furnace.

(2) *Rotary spin manufacturing lines.* On and after the date the initial performance test is completed or required to be completed under § 63.7 of this part, whichever date is earlier, the owner or operator shall not discharge or cause to be discharged into the atmosphere in excess of:

(i) 0.6 kg of formaldehyde per megagram (1.2 lb of formaldehyde per ton) of glass pulled for each existing rotary spin manufacturing line; and

(ii) 0.4 kg of formaldehyde per megagram (0.8 lb of formaldehyde per ton) of glass pulled for each new rotary spin manufacturing line.

(3) *Flame attenuation manufacturing lines.* On and after the date the initial performance test is completed or required to be completed under § 63.7 of this part, whichever date is earlier, the owner or operator shall not discharge or cause to be discharged into the atmosphere in excess of:

(i) 3.9 kg of formaldehyde per megagram (7.8 lb of formaldehyde per ton) of glass pulled for each new flame attenuation manufacturing line that produces heavy-density wool fiberglass; and

(ii) 3.4 kg of formaldehyde per megagram (6.8 lb of formaldehyde per ton) of glass pulled from each existing

or new flame attenuation manufacturing line that produces pipe product wool fiberglass.

(b) *Operating limits.* On and after the date on which the performance test required to be conducted by §§ 63.7 and 63.1384 is completed, the owner or operator must operate all affected control equipment and processes according to the following requirements.

(1)(i) The owner or operator must initiate corrective action within 1 hour of an alarm from a bag leak detection system and complete corrective actions in a timely manner according to the procedures in the operations, maintenance, and monitoring plan.

(ii) The owner or operator must implement a Quality Improvement Plan (QIP) consistent with the compliance assurance monitoring provisions of 40 CFR part 64, subpart D when the bag leak detection system alarm is sounded for more than 5 percent of the total operating time in a 6-month block reporting period.

(2)(i) The owner or operator must initiate corrective action within 1 hour when any 3-hour block average of the monitored electrostatic precipitator (ESP) parameter is outside the limit(s) established during the performance test as specified in § 63.1384 and complete corrective actions in a timely manner according to the procedures in the operations, maintenance, and monitoring plan.

(ii) The owner or operator must implement a QIP consistent with the compliance assurance monitoring provisions of 40 CFR part 64 subpart D when the monitored ESP parameter is outside the limit(s) established during the performance test as specified in § 63.1384 for more than 5 percent of the total operating time in a 6-month block reporting period.

(iii) The owner or operator must operate the ESP such that the monitored ESP parameter is not outside the limit(s) established during the performance test as specified in § 63.1384 for more than 10 percent of the total operating time in a 6-month block reporting period.

(3)(i) The owner or operator must initiate corrective action within 1 hour when any 3-hour block average temperature of a cold top electric furnace as measured at a location 46 to 61 centimeters (18 to 24 inches) above the molten glass surface, exceeds 120 °C (250 °F) and complete corrective actions in a timely manner according to the procedures in the operations, maintenance, and monitoring plan.

(ii) The owner or operator of a cold top electric furnace must implement a QIP consistent with the compliance assurance monitoring provisions of 40 CFR part 64, subpart D when the temperature, as measured at a location 46 to 61 centimeters (18 to 24 inches) above the molten glass surface, exceeds 120 °C (250 °F) for more than 5 percent of the total operating time in a 6-month block reporting period.

(iii) The owner or operator must operate the cold top electric furnace such that the temperature does not exceed 120 °C (250 °F) as measured at a location 46 to 61 centimeters (18 to 24 inches) above the molten glass surface, for more than 10 percent of the total operating time in a 6-month reporting period.

(4)(i) The owner or operator must initiate corrective action within 1 hour when any 3-hour block average value for the monitored parameter(s) for a glass-melting furnace, which uses no add-on controls and which is not a cold top electric furnace, is outside the limit(s) established during the performance test as specified in § 63.1384 and complete corrective actions in a timely manner according to the procedures in the operations, maintenance, and monitoring plan.

(ii) The owner or operator must implement a QIP consistent with the compliance assurance monitoring provisions of 40 CFR Part 64 subpart D when the monitored parameter(s) is outside the limit(s) established during the performance test as specified in § 63.1384 for more than 5 percent of the total operating time in a 6-month block reporting period.

(iii) The owner or operator must operate a glass-melting furnace, which uses no add-on controls and which is not a cold top electric furnace, such that the monitored parameter(s) is not outside the limit(s) established during the performance test as specified in § 63.1384 for more than 10 percent of the total operating time in a 6-month block reporting period.

(5)(i) The owner or operator must initiate corrective action within 1 hour when the average glass pull rate of any 4-hour block period for glass melting furnaces equipped with continuous glass pull rate monitors, or daily glass pull rate for glass melting furnaces not so equipped, exceeds the average glass pull rate established during the performance test as specified in § 63.1384, by greater than 20 percent and complete corrective actions in a timely manner according to the procedures in the operations, maintenance, and monitoring plan.

(ii) The owner or operator must implement a QIP consistent with the compliance assurance monitoring provisions of 40 CFR part 64, subpart D when the glass pull rate exceeds, by more than 20 percent, the average glass pull rate established during the performance test as specified in § 63.1384 for more than 5 percent of the total operating time in a 6-month block reporting period.

(iii) The owner or operator must operate each glass-melting furnace such that the glass pull rate does not exceed, by more than 20 percent, the average glass pull rate established during the performance test as specified in § 63.1384 for more than 10 percent of the total operating time in a 6-month block reporting period.

(6) The owner or operator must operate each incinerator used to control formaldehyde emissions from forming or curing such that any 3-hour block average temperature in the firebox does not fall below the average established during the performance test as specified in § 63.1384.

(7)(i) The owner or operator must initiate corrective action within 1 hour when the average pressure drop, liquid flow rate, or chemical feed rate for any 3-hour block period is outside the limits established during the performance tests as specified in § 63.1384 for each wet scrubbing control device and complete corrective actions in a timely manner according to the procedures in the operations, maintenance, and monitoring plan.

(ii) The owner or operator must implement a QIP consistent with the compliance assurance monitoring provisions of 40 CFR part 64, subpart D when any scrubber parameter is outside the limit(s) established during the performance test as specified in § 63.1384 for more than 5 percent of the total operating time in a 6-month block reporting period.

(iii) The owner or operator must operate each scrubber such that each monitored parameter is not outside the limit(s) established during the performance test as specified in § 63.1384 for more than 10 percent of the total operating time in a 6-month block reporting period.

(8)(i) The owner or operator must initiate corrective action within 1 hour when the monitored process parameter level(s) is outside the limit(s) established during the performance test as specified in § 63.1384 for the process modification(s) used to control formaldehyde emissions and complete corrective actions in a timely manner according to the procedures in the operations, maintenance, and monitoring plan.

(ii) The owner or operator must implement a QIP consistent with the compliance assurance monitoring provisions of 40 CFR part 64, subpart D

when the process parameter(s) is outside the limit(s) established during the performance test as specified in § 63.1384 for more than 5 percent of the total operating time in a 6-month block reporting period.

(iii) The owner or operator must operate the process modifications such that the monitored process parameter(s) is not outside the limit(s) established during the performance test as specified in § 63.1384 for more than 10 percent of the total operating time in a 6-month block reporting period.

(9) The owner or operator must use a resin in the formulation of binder such that the free-formaldehyde content of the resin used does not exceed the free-formaldehyde range contained in the specification for the resin used during the performance test as specified in § 63.1384.

(10) The owner or operator must use a binder formulation that does not vary from the specification and operating range established and used during the performance test as specified in § 63.1384. For the purposes of this standard, adding or increasing the quantity of urea and/or lignin in the binder formulation does not constitute a change in the binder formulation.

§ 63.1383 Monitoring requirements.

On and after the date on which the performance test required to be conducted by §§ 63.7 and 63.1384 is completed, the owner or operator must monitor all affected control equipment and processes according to the following requirements.

(a) The owner or operator of each wool fiberglass manufacturing facility must prepare for each glass-melting furnace, rotary spin manufacturing line, and flame attenuation manufacturing line subject to the provisions of this subpart, a written operations, maintenance, and monitoring plan. The plan must be submitted to the Administrator for review and approval as part of the application for a part 70 permit. The plan must include the following information:

(1) Procedures for the proper operation and maintenance of process modifications and add-on control devices used to meet the emission limits in § 63.1382;

(2) Procedures for the proper operation and maintenance of monitoring devices used to determine compliance, including quarterly calibration and certification of accuracy of each monitoring device according to the manufacturers's instructions; and

(3) Corrective actions to be taken when process parameters or add-on control device parameters deviate from the limit(s) established during initial performance tests.

(b)(1) Where a baghouse is used to control PM emissions from a glass-melting furnace, the owner or operator shall install, calibrate, maintain, and continuously operate a bag leak detection system.

(i) The bag leak detection system must be certified by the manufacturer to be capable of detecting PM emissions at concentrations of 10 milligrams per actual cubic meter (0.0044 grains per actual cubic foot) or less.

(ii) The bag leak detection system sensor must produce output of relative PM emissions.

(iii) The bag leak detection system must be equipped with an alarm system that will sound automatically when an increase in relative PM emissions over a preset level is detected and the alarm must be located such that it can be heard by the appropriate plant personnel.

(iv) For positive pressure fabric filter systems, a bag leak detection system must be installed in each baghouse compartment or cell. If a negative pressure or induced air baghouse is used, the bag leak detection system must be installed downstream of the baghouse. Where multiple bag leak detection systems are required (for either type of baghouse), the system instrumentation and alarm may be shared among the monitors.

(v) A triboelectric bag leak detection system shall be installed, operated, adjusted, and maintained in a manner consistent with the U.S. Environmental Protection Agency guidance, ''Fabric Filter Bag Leak Detection Guidance'' (EPA–454/R–98–015, September 1997). Other bag leak detection systems shall be installed, operated, adjusted, and maintained in a manner consistent with the manufacturer's written specifications and recommendations.

(vi) Initial adjustment of the system shall, at a minimum, consist of establishing the baseline output by adjusting the range and the averaging period of the device and establishing the alarm set points and the alarm delay time.

(vii) Following the initial adjustment, the owner or operator shall not adjust the range, averaging period, alarm setpoints, or alarm delay time except as detailed in the approved operations, maintenance, and monitoring plan required under paragraph (a) of this section. In no event shall the range be increased by more than 100 percent or decreased more than 50 percent over a 365-day period unless a responsible official as defined in § 63.2 of the general provisions in subpart A of this part certifies that the baghouse has been inspected and found to be in good operating condition.

(2) The operations, maintenance, and monitoring plan required by paragraph (a) of this section must specify corrective actions to be followed in the event of a bag leak detection system alarm. Example corrective actions that may be included in the plan include the following:

(i) Inspecting the baghouse for air leaks, torn or broken bags or filter media, or any other conditions that may cause an increase in emissions.

(ii) Sealing off defective bags or filter media.

(iii) Replacing defective bags or filter media, or otherwise repairing the control device.

(iv) Sealing off a defective baghouse compartment.

(v) Cleaning the bag leak detection system probe, or otherwise repairing the bag leak detection system.

(vi) Shutting down the process producing the particulate emissions.

(c)(1) Where an ESP is used to control PM emissions from a glass-melting furnace, the owner or operator must monitor the ESP according to the procedures in the operations, maintenance, and monitoring plan.

(2)The operations, maintenance, and monitoring plan for the ESP must contain the following information:

(i) The ESP operating parameter(s), such as secondary voltage of each electrical field, to be monitored and the minimum and/or maximum value(s) that will be used to identify any operational problems;

(ii) A schedule for monitoring the ESP operating parameter(s);

(iii) Recordkeeping procedures, consistent with the recordkeeping requirements of § 63.1386, to show that the ESP operating parameter(s) is within the limit(s) established during the performance test; and

(iv) Procedures for the proper operation and maintenance of the ESP.

(d) The owner or operator must measure and record at least once per shift the temperature 46 to 61 centimeters (18 to 24 inches) above the surface of the molten glass in a cold top electric furnace that does not use any add-on controls to control PM emissions.

(e)(1) Where a glass-melting furnace is operated without an add-on control device to control PM emissions, the owner or operator must monitor the glass-melting furnace according to the procedures in the operations, maintenance, and monitoring plan.

(2) The operations, maintenance, and monitoring plan for the glass-melting

furnace must contain the following information:

(i) The operating parameter(s) to be monitored and the minimum and/or maximum value(s) that will be used to identify any operational problems;

(ii) A schedule for monitoring the operating parameter(s) of the glass-melting furnace;

(iii) Recordkeeping procedures, consistent with the recordkeeping requirements of § 63.1386, to show that the glass-melting furnace parameter(s) is within the limit(s) established during the performance test; and

(iv) Procedures for the proper operation and maintenance of the glass-melting furnace.

(f)(1) The owner or operator of an existing glass-melting furnace equipped with continuous glass pull rate monitors must monitor and record the glass pull rate on an hourly basis. For glass-melting furnaces that are not equipped with continuous glass pull rate monitors, the glass pull rate must be monitored and recorded once per day.

(2) On any new glass-melting furnace, the owner or operator must install, calibrate, and maintain a continuous glass pull rate monitor that monitors and records on an hourly basis the glass pull rate.

(g)(1) The owner or operator who uses an incinerator to control formaldehyde emissions from forming or curing shall install, calibrate, maintain, and operate a monitoring device that continuously measures and records the operating temperature in the firebox of each incinerator.

(2) The owner or operator must inspect each incinerator at least once per year according to the procedures in the operations, maintenance, and monitoring plan. At a minimum, an inspection must include the following:

(i) Inspect all burners, pilot assemblies, and pilot sensing devices for proper operation and clean pilot sensor, as necessary;

(ii) Ensure proper adjustment of combustion air and adjust, as necessary;

(iii) Inspect, when possible, internal structures, for example, baffles, to ensure structural integrity per the design specifications;

(iv) Inspect dampers, fans, and blowers for proper operation;

(v) Inspect for proper sealing;

(vi) Inspect motors for proper operation;

(vii) Inspect combustion chamber refractory lining and clean and repair/replace lining, as necessary;

(viii) Inspect incinerator shell for corrosion and/or hot spots;

(ix) For the burn cycle that follows the inspection, document that the incinerator is operating properly and make any necessary adjustments; and

(x) Generally observe that the equipment is maintained in good operating condition.

(xi) Complete all necessary repairs as soon as practicable.

(h) The owner or operator who uses a wet scrubbing control device to control formaldehyde emissions must install, calibrate, maintain, and operate monitoring devices that continuously monitor and record the gas pressure drop across each scrubber and scrubbing liquid flow rate to each scrubber according to the procedures in the operations, maintenance, and monitoring plan. The pressure drop monitor is to be certified by its manufacturer to be accurate within ±250 pascals (±1 inch water gauge) over its operating range, and the flow rate monitor is to be certified by its manufacturer to be accurate within ±5 percent over its operating range. The owner or operator must also continuously monitor and record the feed rate of any chemical(s) added to the scrubbing liquid.

(i)(1) The owner or operator who uses process modifications to control formaldehyde emissions must establish a correlation between formaldehyde emissions and a process parameter(s) to be monitored.

(2) The owner or operator must monitor the established parameter(s) according to the procedures in the operations, maintenance, and monitoring plan.

(3)The owner or operator must include as part of their operations, maintenance, and monitoring plan the following information:

(i) Procedures for the proper operation and maintenance of the process;

(ii) Process parameter(s) to be monitored to demonstrate compliance with the applicable emission limits in § 63.1382. Examples of process parameters include LOI, binder solids content, and binder application rate;

(iii) Correlation(s) between process parameter(s) to be monitored and formaldehyde emissions;

(iv) A schedule for monitoring the process parameter(s); and

(v) Recordkeeping procedures, consistent with the recordkeeping requirements of § 63.1386, to show that the process parameter value(s) established during the performance test is not exceeded.

(j) The owner or operator must monitor and record the free-formaldehyde content of each resin shipment received and used in the formulation of binder.

(k) The owner or operator must monitor and record the formulation of each batch of binder used.

(l) The owner or operator must monitor and record at least once every 8 hours, the product LOI and product density of each bonded wool fiberglass product manufactured.

(m) For all control device and process operating parameters measured during the initial performance tests, the owners or operators of glass-melting furnaces, rotary spin manufacturing lines or flame attenuation manufacturing lines subject to this subpart may change the limits established during the initial performance tests if additional performance testing is conducted to verify that, at the new control device or process parameter levels, they comply with the applicable emission limits in § 63.1382. The owner or operator shall conduct all additional performance tests according to the procedures in this part 63, subpart A and in § 63.1384.

§ 63.1384 Performance test requirements.

(a) The owner or operator subject to the provisions of this subpart shall conduct a performance test to demonstrate compliance with the applicable emission limits in § 63.1382. Compliance is demonstrated when the emission rate of the pollutant is equal to or less than each of the applicable emission limits in § 63.1382. The owner or operator shall conduct the performance test according to the procedures in 40 CFR part 63, subpart A and in this section.

(1) All monitoring systems and equipment must be installed, operational, and calibrated prior to the performance test.

(2) Unless a different frequency is specified in this section, the owner or operator must monitor and record process and/or add-on control device parameters at least every 15 minutes during the performance tests. The arithmetic average for each parameter must be calculated using all of the recorded measurements for the parameter.

(3) During each performance test, the owner or operator must monitor and record the glass pull rate for each glass-melting furnace and, if different, the glass pull rate for each rotary spin manufacturing line and flame attenuation manufacturing line. Record the glass pull rate every 15 minutes during any performance test required by this subpart and determine the arithmetic average of the recorded measurements for each test run and calculate the average of the three test runs.

(4) The owner or operator shall conduct a performance test for each existing and new glass-melting furnace.

(5) During the performance test, the owner or operator of a glass-melting furnace controlled by an ESP shall monitor and record the ESP parameter level(s), as specified in the operations, maintenance, and monitoring plan, and establish the minimum and/or maximum value(s) that will be used to demonstrate compliance after the initial performance test.

(6) During the performance test, the owner or operator of a cold top electric furnace that is not equipped with an add-on control device for PM emissions control, must monitor and record the temperature 46 to 61 centimeters (18 to 24 inches) above the molten glass surface to ensure that the maximum temperature does not exceed 120 °C (250 °F).

(7) During the performance test, the owner or operator of a glass melting furnace (other than a cold top electric furnace) that is not equipped with an add-on control device for PM emissions control, must monitor and record the furnace parameter level, and establish the minimum and/or maximum value(s) that will be used to demonstrate compliance after the initial performance test.

(8) The owner or operator must conduct a performance test for each rotary spin manufacturing line, subject to this subpart, while producing the building insulation with the highest LOI expected to be produced on that line; and for each flame attenuation manufacturing line, subject to this subpart, while producing the heavy-density product or pipe product with the highest LOI expected to be produced on the affected line.

(9) The owner or operator of each rotary spin manufacturing line and flame attenuation manufacturing line regulated by this subpart must conduct performance tests using the resin with the highest free-formaldehyde content. During the performance test of each rotary spin manufacturing line and flame attenuation manufacturing line regulated by this subpart, the owner or operator shall monitor and record the free-formaldehyde content of the resin, the binder formulation used, and the product LOI and density.

(10) During the performance test, the owner or operator of a rotary spin manufacturing line or flame attenuation manufacturing line who plans to use process modifications to comply with the emission limits in § 63.1382 must monitor and record the process parameter level(s), as specified in the operations, maintenance, and monitoring plan, which will be used to demonstrate compliance after the initial performance test.

(11) During the performance test, the owner or operator of a rotary spin manufacturing line or flame attenuation manufacturing line who plans to use a wet scrubbing control device to comply with the emission limits in § 63.1382 must continuously monitor and record the pressure drop across the scrubber, the scrubbing liquid flow rate, and addition of any chemical to the scrubber, including the chemical feed rate, and establish the minimum and/or maximum value(s) that will be used to determine compliance after the initial performance test.

(12) During the performance test, the owner or operator of a rotary spin manufacturing line or affected flame attenuation manufacturing line shall continuously record the operating temperature of each incinerator and record the average during each 1-hour test; the average operating temperature of the three 1-hour tests shall be used to monitor compliance.

(13) Unless disapproved by the Administrator, an owner or operator of a rotary spin or flame attenuation manufacturing line regulated by this subpart may conduct short-term experimental production runs using binder formulations or other process modifications where the process parameter values would be outside those established during performance tests without first conducting performance tests. Such runs must not exceed 1 week in duration unless the Administrator approves a longer period. The owner or operator must notify the Administrator and postmark or deliver the notification at least 15 days prior to commencement of the short-term experimental production runs. The Administrator must inform the owner or operator of a decision to disapprove or must request additional information prior to the date of the short-term experimental production runs. Notification of intent to perform an experimental short-term production run shall include the following information:

(i) The purpose of the experimental production run;

(ii) The affected line;

(iii) How the established process parameters will deviate from previously approved levels;

(iv) The duration of the experimental production run;

(v) The date and time of the experimental production run; and

(vi) A description of any emission testing to be performed during the experimental production run.

(b) To determine compliance with the PM emission limit for glass-melting furnaces, use the following equation:

$$E = \frac{C \times Q \times K_1}{P} \qquad \text{(Eq. 1)}$$

Where:

E = Emission rate of PM, kg/Mg (lb/ton) of glass pulled;

C = Concentration of PM, g/dscm (gr/dscf);

Q = Volumetric flow rate of exhaust gases, dscm/h (dscf/h);

K_1 = Conversion factor, 1 kg/1,000 g (1 lb/7,000 gr); and

P = Average glass pull rate, Mg/h (tons/h).

(c) To determine compliance with the emission limit for formaldehyde for rotary spin manufacturing lines and flame attenuation forming processes, use the following equation:

$$E = \frac{C \times MW \times Q \times K_1 \times K_2}{K_3 \times P \times 10^6} \qquad \text{(Eq. 2)}$$

Where:

E = Emission rate of formaldehyde, kg/Mg (lb/ton) of glass pulled;

C = Measured volume fraction of formaldehyde, ppm;

MW = Molecular weight of formaldehyde, 30.03 g/g-mol;

Q = Volumetric flow rate of exhaust gases, dscm/h (dscf/h);

K_1 = Conversion factor, 1 kg/1,000 g (1 lb/453.6 g);

K_2 = Conversion factor, 1,000 L/m^3 (28.3 L/ft^3);

K_3 = Conversion factor, 24.45 L/g-mol; and

P = Average glass pull rate, Mg/h (tons/h).

§ 63.1385 Test methods and procedures.

(a) The owner or operator shall use the following methods to determine compliance with the applicable emission limits:

(1) Method 1 (40 CFR part 60, appendix A) for the selection of the sampling port location and number of sampling ports;

(2) Method 2 (40 CFR part 60, appendix A) for volumetric flow rate;

(3) Method 3 or 3A (40 CFR part 60, appendix A) for O_2 and CO_2 for diluent measurements needed to correct the concentration measurements to a standard basis;

(4) Method 4 (40 CFR part 60, appendix A) for moisture content of the stack gas;

(5) Method 5 (40 CFR part 60, appendix A) for the concentration of PM. Each run shall consist of a minimum run time of 2 hours and a minimum sample volume of 60 dry standard cubic feet (dscf). The probe

and filter holder heating system may be set to provide a gas temperature no greater than 177 ±14 °C (350 ±25 °F);

(6) Method 316 or Method 318 (appendix A of this part) for the concentration of formaldehyde. Each run shall consist of a minimum run time of 1 hour;

(7) Method contained in appendix A of this subpart for the determination of product LOI;

(8) Method contained in appendix B of this subpart for the determination of the free-formaldehyde content of resin;

(9) Method contained in appendix C of this subpart for the determination of product density;

(10) An alternative method, subject to approval by the Administrator.

(b) Each performance test shall consist of 3 runs. The owner or operator shall use the average of the three runs in the applicable equation for determining compliance.

§ 63.1386 Notification, recordkeeping, and reporting requirements.

(a) *Notifications.* As required by § 63.9(b) through (h) of this part, the owner or operator shall submit the following written initial notifications to the Administrator:

(1) Notification for an area source that subsequently increases its emissions such that the source is a major source subject to the standard;

(2) Notification that a source is subject to the standard, where the initial startup is before June 14, 2002.

(3) Notification that a source is subject to the standard, where the source is new or has been reconstructed, the initial startup is after June 14, 2002, and for which an application for approval of construction or reconstruction is not required;

(4) Notification of intention to construct a new major source or reconstruct a major source; of the date construction or reconstruction commenced; of the anticipated date of startup; of the actual date of startup, where the initial startup of a new or reconstructed source occurs after June 14, 2002, and for which an application for approval or construction or reconstruction is required (See § 63.9(b)(4) and (5) of this part);

(5) Notification of special compliance obligations;

(6) Notification of performance test; and (7) Notification of compliance status.

(b) *Performance test report.* As required by § 63.10(d)(2) of the general provisions, the owner or operator shall report the results of the initial performance test as part of the notification of compliance status required in paragraph (a)(7) of this section.

(c) *Startup, shutdown, and malfunction plan and reports.* (1) The owner or operator shall develop and implement a written plan as described in § 63.6(e)(3) of this part that contains specific procedures to be followed for operating the source and maintaining the source during periods of startup, shutdown, and malfunction and a program of corrective action for malfunctioning process modifications and control systems used to comply with the standard. In addition to the information required in § 63.6(e)(3), the plan shall include:

(i) Procedures to determine and record the cause of the malfunction and the time the malfunction began and ended;

(ii) Corrective actions to be taken in the event of a malfunction of a control device or process modification, including procedures for recording the actions taken to correct the malfunction or minimize emissions; and

(iii) A maintenance schedule for each control device and process modification that is consistent with the manufacturer's instructions and recommendations for routine and long-term maintenance.

(2) The owner or operator shall also keep records of each event as required by § 63.10(b) of this part and record and report if an action taken during a startup, shutdown, or malfunction is not consistent with the procedures in the plan as described in § 63.10(e)(3)(iv) of this part.

(d) *Recordkeeping.* (1) As required by § 63.10(b) of this part, the owner or operator shall maintain files of all information (including all reports and notifications) required by the general provisions and this subpart:

(i) The owner or operator must retain each record for at least 5 years following the date of each occurrence, measurement, maintenance, corrective action, report, or record. The most recent 2 years of records must be retained at the facility. The remaining 3 years of records may be retained off site;

(ii) The owner or operator may retain records on microfilm, on a computer, on computer disks, on magnetic tape, or on microfiche; and

(iii) The owner or operator may report required information on paper or on a labeled computer disk using commonly available and EPA-compatible computer software.

(2) In addition to the general records required by § 63.10(b)(2) of this part, the owner or operator shall maintain records of the following information:

(i) Any bag leak detection system alarms, including the date and time of the alarm, when corrective actions were initiated, the cause of the alarm, an explanation of the corrective actions taken, and when the cause of the alarm was corrected;

(ii) ESP parameter value(s) used to monitor ESP performance, including any period when the value(s) deviated from the established limit(s), the date and time of the deviation, when corrective actions were initiated, the cause of the deviation, an explanation of the corrective actions taken, and when the cause of the deviation was corrected;

(iii) Air temperature above the molten glass in an uncontrolled cold top electric furnace, including any period when the temperature exceeded 120 °C (250 °F) at a location 46 to 61 centimeters (18 to 24 inches) above the molten glass surface, the date and time of the exceedance, when corrective actions were initiated, the cause of the exceedance, an explanation of the corrective actions taken, and when the cause of the exceedance was corrected;

(iv) Uncontrolled glass-melting furnace (that is not a cold top electric furnace) parameter value(s) used to monitor furnace performance, including any period when the value(s) exceeded the established limit(s), the date and time of the exceedance, when corrective actions were initiated, the cause of the exceedance, an explanation of the corrective actions taken, and when the cause of the exceedance was corrected;

(v) The formulation of each binder batch and the LOI and density for each product manufactured on a rotary spin manufacturing line or flame attenuation manufacturing line subject to the provisions of this subpart, and the free formaldehyde content of each resin shipment received and used in the binder formulation;

(vi) Process parameter level(s) for RS and FA manufacturing lines that use process modifications to comply with the emission limits, including any period when the parameter level(s) deviated from the established limit(s), the date and time of the deviation, when corrective actions were initiated, the cause of the deviation, an explanation of the corrective actions taken, and when the cause of the deviation was corrected;

(vii) Scrubber pressure drop, scrubbing liquid flow rate, and any chemical additive (including chemical feed rate to the scrubber), including any period when a parameter level(s) deviated from the established limit(s), the date and time of the deviation, when corrective actions were initiated, the cause of the deviation, an explanation of

the corrective actions taken, and when the cause of the deviation was corrected;

(viii) Incinerator operating temperature and results of periodic inspection of incinerator components, including any period when the temperature fell below the established average or the inspection identified problems with the incinerator, the date and time of the problem, when corrective actions were initiated, the cause of the problem, an explanation of the corrective actions taken, and when the cause of the problem was corrected;

(ix) Glass pull rate, including any period when the pull rate exceeded the average pull rate established during the performance test by more than 20 percent, the date and time of the exceedance, when corrective actions were initiated, the cause of the exceedance, an explanation of the corrective actions taken, and when the cause of the exceedance was corrected.

(e) *Excess emissions report.* As required by § 63.10(e)(3)(v) of this part, the owner or operator shall report semiannually if measured emissions are in excess of the applicable standard or a monitored parameter deviates from the levels established during the performance test. The report shall contain the information specified in § 63.10(c) of this part as well as the additional records required by the recordkeeping requirements of paragraph (d) of this section. When no deviations have occurred, the owner or operator shall submit a report stating that no excess emissions occurred during the reporting period.

§ 63.1387 Compliance dates.

(a) *Compliance dates.* The owner or operator subject to the provisions of this subpart shall demonstrate compliance with the requirements of this subpart by no later than:

(1) June 14, 2002, for an existing glass-melting furnace, rotary spin manufacturing line, or flame attenuation manufacturing line; or

(2) Upon startup for a new glass-melting furnace, rotary spin manufacturing line, or flame attenuation manufacturing line.

(b) *Compliance extension.* The owner or operator of an existing source subject to this subpart may request from the Administrator an extension of the compliance date for the emission standards for one additional year if such additional period is necessary for the installation of controls. The owner or operator shall submit a request for an extension according to the procedures in § 63.6(i)(3) of this part.

§§ 63.1388—63.1399 [Reserved]

TABLE 1 TO SUBPART NNN OF PART 63.—APPLICABILITY OF GENERAL PROVISIONS (40 CFR PART 63, SUBPART A) TO SUBPART NNN

General provisions citation	Requirement	Applies to subpart NNN	Explanation
63.1(a)(1)–(a)(4)	Applicability	Yes.	
63.1(a)(5)		No	[Reserved].
63.1(a)(6)–(a)(8)		Yes.	
63.1(a)(9)		No	[Reserved].
63.1(a)(10)–(a)(14)		Yes.	
63.1(b)(1)–(b)(3)	Initial Applicability Determination	Yes.	
63.1(c)(1)–(c)(2)	Applicability After Standard Established.	Yes.	
63.1(c)(3)		No	[Reserved].
63.1(c)(4)–(c)(5)		Yes.	
63.1(d)		No	[Reserved].
63.1(e)	Applicability of Permit Program	Yes.	
63.2	Definitions	Yes	Additional definitions in § 63.1381.
63.3(a)–(c)	Units and Abbreviations	Yes.	
63.4(a)(1)–(a)(3)	Prohibited Activities	Yes.	
63.4(a)(4)		No	[Reserved].
63.4(a)(5)		Yes.	
63.4(b)–(c)		Yes.	
63.5(a)(1)–(a)(2)	Construction/Reconstruction	Yes.	
63.5(b)(1)	Existing, New, Reconstructed	Yes.	
63.5(b)(2)		No	[Reserved].
63.5(b)(3)–(b)(6)		Yes.	
63.5(c)		No	[Reserved].
63.5(d)	Approval of Construction/Reconstruction.	Yes.	
63.5(e)		Yes.	
63.5(f)		Yes.	
63.6(a)	Compliance with Standards and Maintenance Requirements.	Yes.	
63.6(b)(1)–(b)(5)		Yes.	
63.6(b)(6)		No	[Reserved].
63.6(b)(7)		Yes.	
63.6(c)(1)	Compliance Date for Existing Sources.	Yes	§63.1387 specifies compliance dates.
63.6(c)(2)		Yes.	
63.6(c)(3)–(c)(4)		No	[Reserved].
63.6(c)(5)		Yes.	
63.6(d)		No	[Reserved].
63.6(e)(1)–(e)(2)	Operation & Maintenance	Yes	§ 63.1383 specifies operations/maintenance plan.
63.6(e)(3)	Startup, Shutdown Malfunction Plan.	Yes.	
63.6(f)(1)–(f)(3)	Compliance with Nonopacity Emission Standards.	Yes.	

TABLE 1 TO SUBPART NNN OF PART 63.—APPLICABILITY OF GENERAL PROVISIONS (40 CFR PART 63, SUBPART A) TO SUBPART NNN—Continued

General provisions citation	Requirement	Applies to subpart NNN	Explanation
63.6(g)(1)–(g)(3)	Alternative Nonopacity Standard	Yes.	
63.6(h)	Opacity/VE Standards	No	Subpart NNN-no COMS, VE or opacity standards.
63.6(i)(1)–(i)(14)	Extension of Compliance	Yes.	
63.6(i)(15)		No	[Reserved].
63.6(i)(16)		Yes.	
63.6(j)	Exemption from Compliance	Yes.	
63.7(a)	Performance Testing Requirements.	Yes	§ 63.1384 has specific requirements.
63.7(b)	Notification	Yes.	
63.7(c)	Quality Assurance Program/Test Plan.	Yes.	
63.7(d)	Performance Testing Facilities	Yes.	
63.7(e)(1)–(e)(4)	Conduct of Performance Tests	Yes.	
63.7(f)	Alternative Test Method	Yes.	
63.7(g)	Data Analysis	Yes.	
63.7(h)	Waiver of Performance Tests	Yes.	
63.8(a)(1)–(a)(2)	Monitoring Requirements	Yes.	
63.8(a)(3)		No	[Reserved].
63.8(a)(4)		Yes.	
63.8(b)	Conduct of Monitoring	Yes.	
63.8(c)	CMS Operation/Maintenance	Yes.	
63.8(d)	Quality Control Program	Yes.	
63.8(e)	Performance Evaluation for CMS	Yes.	
63.8(f)	Alternative Monitoring Method	Yes.	
63.8(g)	Reduction of Monitoring Data	Yes.	
63.9(a)	Notification Requirements	Yes.	
63.9(b)	Initial Notifications	Yes.	
63.9(c)	Request for Compliance Extension.	Yes.	
63.9(d)	New Source Notification for Special Compliance Requirements.	Yes.	
63.9(e)	Notification of Performance Test	Yes.	
63.9(f)	Notification of VE/Opacity Test	No	Opacity/VE tests not required.
63.9(g)	Additional CMS Notifications	Yes.	
63.9(h)(1)–(h)(3)	Notification of Compliance Status	Yes.	
63.9(h)(4)		No	[Reserved].
63.9(h)(5)–(h)(6)		Yes.	
63.9(i)	Adjustment of Deadlines	Yes.	
63.9(j)	Change in Previous Information	Yes.	
63.10(a)	Recordkeeping/Reporting	Yes.	
63.10(b)	General Requirements	Yes.	
63.10(c)(1)	Additional CMS Recordkeeping	Yes.	
63.10(c)(2)–(c)(4)		No	[Reserved].
63.10(c)(5)–(c)(8)		Yes.	
63.10(c)(9)		No	[Reserved].
63.10(c)(10)–(15)		Yes.	
63.10(d)(1)	General Reporting Requirements	Yes.	
63.10(d)(2)	Performance Test Results	Yes.	
63.10(d)(3)	Opacity or VE Observations	No	No limits for VE/opacity.
63.10(d)(4)	Progress Reports	Yes.	
63.10(d)(5)	Startup, Shutdown, Malfunction Reports.	Yes.	
63.10(e)(1)–(e)(3)	Additional CMS Reports	Yes.	
63.10(e)(4)	Reporting COM Data	No	COM not required.
63.10(f)	Waiver of Recordkeeping/Reporting.	Yes.	
63.11(a)	Control Device Requirements	Yes.	
63.11(b)	Flares	No	Flares not applicable.
63.12	State Authority and Delegations	Yes.	
63.13	State/Regional Addresses	Yes.	
63.14	Incorporation by Reference	No.	
63.15	Availability of Information	Yes.	

Appendix A to Subpart NNN of Part 63—Method for the Determination of LOI

1. Purpose

The purpose of this test is to determine the LOI of cured blanket insulation. The method is applicable to all cured board and blanket products.

2. Equipment

2.1 Scale sensitive to 0.1 gram.

2.2 Furnace designed to heat to at least 540 °C (1,000 °F) and controllable to ±10 °C (50 °F).

2.3 Wire tray for holding specimen while in furnace.

3. Procedure

3.1 Cut a strip along the entire width of the product that will weigh at least 10.0 grams. Sample should be free of dirt or foreign matter.

Note: Remove all facing from sample.

3.2 Cut the sample into pieces approximately 12 inches long, weigh to the nearest 0.1 gram and record. Place in wire tray. Sample should not be compressed or overhang on tray edges.

Note: On air duct products, remove shiplaps and overspray.

3.3 Place specimen in furnace at 540 °C (1,000 °F), ±10 °C (50 °F) for 15 to 20 minutes to insure complete oxidation. After ignition, fibers should be white and should not be fused together.

3.4 Remove specimen from the furnace and cool to room temperature.

3.5 Weigh cooled specimen and wire tray to the nearest 0.1 gram. Deduct the weight of the wire tray and then calculate the loss in weight as a percent of the original specimen weight.

Appendix B to Subpart NNN of Part 63—Free Formaldehyde Analysis of Insulation Resins by Hydroxylamine Hydrochloride

1. Scope

This method was specifically developed for water-soluble phenolic resins that have a relatively high free-formaldehyde (FF) content such as insulation resins. It may also be suitable for other phenolic resins, especially those with a high FF content.

2. Principle

2.1 a. The basis for this method is the titration of the hydrochloric acid that is liberated when hydroxylamine hydrochloride reacts with formaldehyde to form formaldoxine:

HCHO + NH2OH:HCl → CH2:NOH + H2O + HCl

b. Free formaldehyde in phenolic resins is present as monomeric formaldehyde, hemiformals, polyoxymethylene hemiformals, and polyoxymethylene glycols. Monomeric formaldehyde and hemiformals react rapidly with hydroxylamine hydrochloride, but the polymeric forms of formaldehyde must hydrolyze to the monomeric state before they can react. The greater the concentration of free formaldehyde in a resin, the more of that formaldehyde will be in the polymeric form. The hydrolysis of these polymers is catalyzed by hydrogen ions.

2.2 The resin sample being analyzed must contain enough free formaldehyde so that the initial reaction with hydroxylamine hydrochloride will produce sufficient hydrogen ions to catalyze the depolymerization of the polymeric formaldehyde within the time limits of the test method. The sample should contain approximately 0.3 grams free formaldehyde to ensure complete reaction within 5 minutes.

3. Apparatus

3.1 Balance, readable to 0.01 g or better.

3.2 pH meter, standardized to pH 4.0 with pH 4.0 buffer and pH 7 with pH 7.0 buffer.

3.3 50-mL burette for 1.0 N sodium hydroxide.

3.4 Magnetic stirrer and stir bars.

3.5 250-mL beaker.

3.6 50-mL graduated cylinder.

3.7 100-mL graduated cylinder.

3.8 Timer.

4. Reagents

4.1 Standardized 1.0 N sodium hydroxide solution.

4.2 Hydroxylamine hydrochloride solution, 100 grams per liter, pH adjusted to 4.00.

4.3 Hydrochloric acid solution, 1.0 N and 0.1 N.

4.4 Sodium hydroxide solution, 0.1 N.

4.5 50/50 v/v mixture of distilled water and methyl alcohol.

5. Procedure

5.1 Determine the sample size as follows:

a. If the expected FF is greater than 2 percent, go to Part A to determine sample size.

b. If the expected FF is less than 2 percent, go to Part B to determine sample size.

c. Part A: Expected FF ≥ 2 percent.

Grams resin = 60/expected percent FF

i. The following table shows example levels:

Expected % free formaldehyde	Sample size, grams
2	30.0
5	12.0
8	7.5
10	6.0
12	5.0
15	4.0

ii. It is very important to the accuracy of the results that the sample size be chosen correctly. If the milliliters of titrant are less than 15 mL or greater than 30 mL, reestimate the needed sample size and repeat the tests.

d. Part B: Expected FF < 2 percent

Grams resin = 30/expected percent FF

i. The following table shows example levels:

Expected % free formaldehyde	Sample size, grams
2	15
1	30
0.5	60

ii. If the milliliters of titrant are less than 5 mL or greater than 30 mL, reestimate the needed sample size and repeat the tests.

5.2 Weigh the resin sample to the nearest 0.01 grams into a 250-mL beaker. Record sample weight.

5.3 Add 100 mL of the methanol/water mixture and stir on a magnetic stirrer. Confirm that the resin has dissolved.

5.4 Adjust the resin/solvent solution to pH 4.0, using the prestandardized pH meter, 1.0 N hydrochloric acid, 0.1 N hydrochloric acid, and 0.1 N sodium hydroxide.

5.5 Add 50 mL of the hydroxylamine hydrochloride solution, measured with a graduated cylinder. Start the timer.

5.6 Stir for 5 minutes. Titrate to pH 4.0 with standardized 1.0 N sodium hydroxide. Record the milliliters of titrant and the normality.

6. Calculations

$$\% \text{ FF} = \frac{\text{mL sodium hydroxide} \times \text{normality} \times 3.003}{\text{grams of sample}}$$

7. Method Precision and Accuracy

Test values should conform to the following statistical precision:

Variance = 0.005

Standard deviation = 0.07

95% Confidence Interval, for a single determination = 0.2

8. Author

This method was prepared by K. K. Tutin and M. L. Foster, Tacoma R&D Laboratory, Georgia-Pacific Resins, Inc. (Principle written by R. R. Conner.)

9. References

9.1 GPAM 2221.2.

9.2 PR&C TM 2.035.

9.3 Project Report, Comparison of Free Formaldehyde Procedures, January 1990, K. K. Tutin.

Appendix C to Subpart NNN of Part 63—Method for the Determination of Product Density

1. Purpose

The purpose of this test is to determine the product density of cured blanket insulation. The method is applicable to all cured board and blanket products.

2. Equipment

One square foot (12 in. by 12 in.) template, or templates that are multiples of one square foot, for use in cutting insulation samples.

3. Procedure

3.1 Obtain a sample at least 30 in. long across the machine width. Sample should be free of dirt or foreign matter.

3.2 Lay out the cutting pattern according to the plant's written procedure for the designated product.

3.2 Cut samples using one square foot (or multiples of one square foot) template.

3.3 Weigh product and obtain area weight (lb/ft^2).

3.4 Measure sample thickness.

3.5 Calculate the product density:

Density (lb/ft^3) = area weight (lb/ft^2)/ thickness (ft)

5. Appendix A to part 63 is amended by adding in numerical order methods 316 and 318 to read as follows:

Appendix A To Part 63—Test Methods

* * * * *

Method 316—Sampling and Analysis for Formaldehyde Emissions From Stationary Sources in the Mineral Wool and Wool Fiberglass Industries

1.0 *Introduction*

This method is applicable to the determination of formaldehyde, CAS Registry number 50–00–0, from stationary sources in the mineral wool and wool fiber glass industries. High purity water is used to collect the formaldehyde. The formaldehyde concentrations in the stack samples are determined using the modified pararosaniline method. Formaldehyde can be detected as low as 8.8×10^{10} lbs/cu ft (11.3 ppbv) or as high as 1.8×10^{3} lbs/cu ft (23,000,000 ppbv), at standard conditions over a 1 hour sampling period, sampling approximately 30 cu ft.

2.0 *Summary of Method*

Gaseous and particulate pollutants are withdrawn isokinetically from an emission source and are collected in high purity water. Formaldehyde present in the emissions is highly soluble in high purity water. The high purity water containing formaldehyde is then analyzed using the modified pararosaniline method. Formaldehyde in the sample reacts with acidic pararosaniline, and the sodium sulfite, forming a purple chromophore. The intensity of the purple color, measured spectrophotometrically, provides an accurate and precise measure of the formaldehyde concentration in the sample.

3.0 *Definitions*

See the definitions in the General Provisions of this Subpart.

4.0 *Interferences*

Sulfite and cyanide in solution interfere with the pararosaniline method. A procedure to overcome the interference by each compound has been described by Miksch, et al.

5.0 *Safety*. (Reserved)

6.0 *Apparatus and Materials*

6.1 A schematic of the sampling train is shown in Figure 1. This sampling train configuration is adapted from EPA Method 5, 40 CFR part 60, appendix A, procedures.

BILLING CODE 6560–50–P

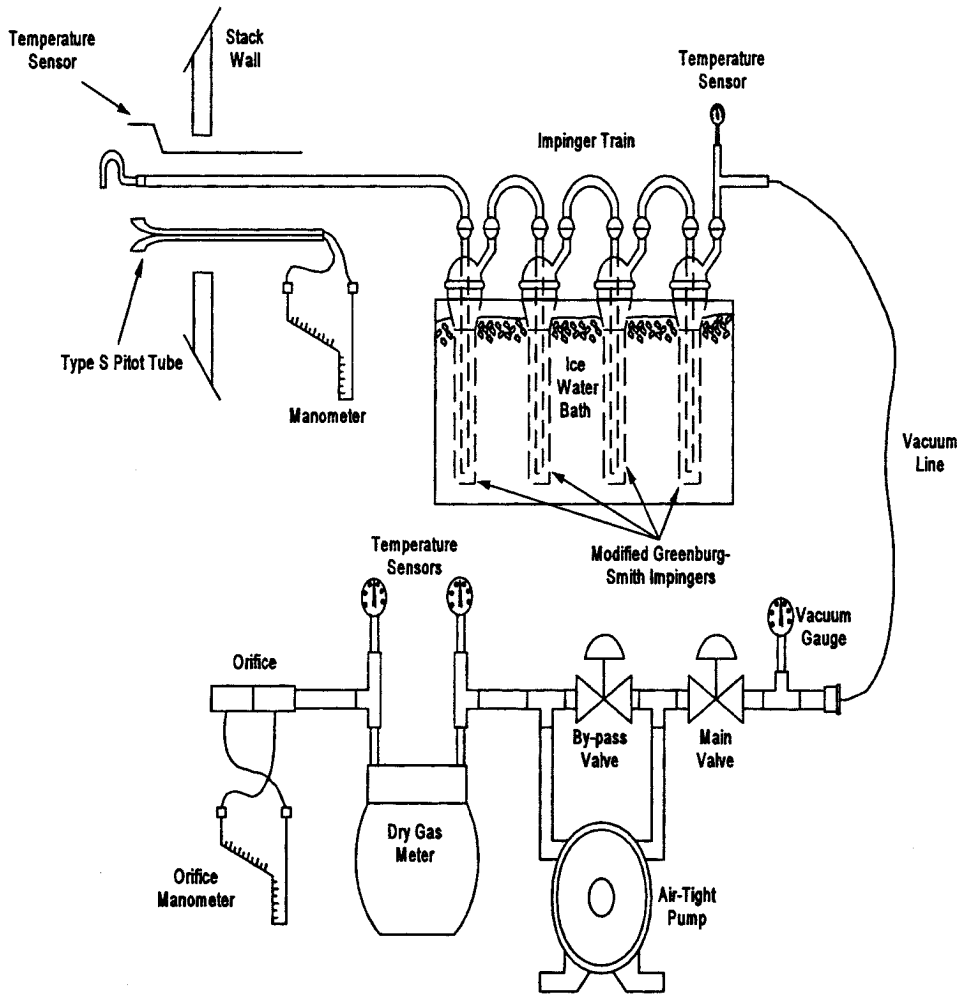

Figure 1. Sampling Train.

The sampling train consists of the following components: probe nozzle, probe liner, pitot tube, differential pressure gauge, impingers, metering system, barometer, and gas density determination equipment.

6.1.1 Probe Nozzle: Quartz, glass, or stainless steel with sharp, tapered (30° angle) leading edge. The taper shall be on the outside to preserve a constant inner diameter. The nozzle shall be buttonhook or elbow design. A range of nozzle sizes suitable for isokinetic sampling should be available in increments of 0.15 cm (1/16 in), e.g., 0.32 to 1.27 cm (1/8 to 1/2 in), or larger if higher volume sampling trains are used. Each nozzle shall be calibrated according to the procedure outlined in Section 10.1.

6.1.2 Probe Liner: Borosilicate glass or quartz shall be used for the probe liner. The probe shall be maintained at a temperature of 120°C ± 14°C (248°F ± 25°F).

6.1.3 Pitot Tube: The pitot tube shall be Type S, as described in Section 2.1 of EPA Method 2, 40 CFR part 60, appendix A, or any other appropriate device. The pitot tube shall be attached to the probe to allow constant monitoring of the stack gas velocity. The impact (high pressure) opening plane of the pitot tube shall be even with or above the nozzle entry plane (see Figure 2–6b, EPA Method 2, 40 CFR part 60, appendix A) during sampling. The Type S pitot tube assembly shall have a known coefficient, determined as outlined in Section 4 of EPA Method 2, 40 CFR part 60, appendix A.

6.1.4 Differential Pressure Gauge: The differential pressure gauge shall be an inclined manometer or equivalent device as described in Section 2.2 of EPA Method 2, 40 CFR part 60, appendix A. One manometer shall be used for velocity-head reading and the other for orifice differential pressure readings.

6.1.5 Impingers: The sampling train requires a minimum of four impingers, connected as shown in Figure 1, with ground glass (or equivalent) vacuum-tight fittings. For the first, third, and fourth impingers, use the Greenburg-Smith design, modified by replacing the tip with a 1.3 cm inside diameters (1/2 in) glass tube extending to 1.3 cm (1/2 in) from the bottom of the flask. For the second impinger, use a Greenburg-Smith impinger with the standard tip. Place a thermometer capable of measuring temperature to within 1°C (2°F) at the outlet of the fourth impinger for monitoring purposes.

6.1.6 Metering System: The necessary components are a vacuum gauge, leak-free pump, thermometers capable of measuring temperatures within 3°C (5.4°F), dry-gas meter capable of measuring volume to within 1 percent, and related equipment as shown in Figure 1. At a minimum, the pump should be capable of 4 cfm free flow, and the dry gas meter should have a recording capacity of 0–999.9 cu ft with a resolution of 0.005 cu ft. Other metering systems may be used which are capable of maintaining sample volumes to within 2 percent. The metering system may be used in conjunction with a pitot tube to enable checks of isokinetic sampling rates.

6.1.7 Barometer: The barometer may be mercury, aneroid, or other barometer capable of measuring atmospheric pressure to within 2.5 mm Hg (0.1 in Hg). In many cases, the barometric reading may be obtained from a nearby National Weather Service Station, in which case the station value (which is the absolute barometric pressure) is requested and an adjustment for elevation differences between the weather station and sampling point is applied at a rate of minus 2.5 mm Hg (0.1 in Hg) per 30 m (100 ft) elevation increase (rate is plus 2.5 mm Hg per 30 m (100 ft) of elevation decrease).

6.1.8 Gas Density Determination Equipment: Temperature sensor and pressure gauge (as described in Sections 2.3 and 2.3 of EPA Method 2, 40 CFR part 60, appendix A), and gas analyzer, if necessary (as described in EPA Method 3, 40 CFR part 60, appendix A). The temperature sensor ideally should be permanently attached to the pitot tube or sampling probe in a fixed configuration such that the top of the sensor extends beyond the leading edge of the probe sheath and does not touch any metal. Alternatively, the sensor may be attached just prior to use in the field. Note, however, that if the temperature sensor is attached in the field, the sensor must be placed in an interference-free arrangement with respect to the Type S pitot openings (see Figure 2–7, EPA Method 2, 40 CFR part 60, appendix A). As a second alternative, if a difference of no more than 1 percent in the average velocity measurement is to be introduced, the temperature gauge need not be attached to the probe or pitot tube.

6.2 Sample Recovery

6.2.1 Probe Liner: Probe nozzle and brushes; bristle brushes with stainless steel wire handles are required. The probe brush shall have extensions of stainless steel, Teflon ™, or inert material at least as long as the probe. The brushes shall be properly sized and shaped to brush out the probe liner, the probe nozzle, and the impingers.

6.2.2 Wash Bottles: One wash bottle is required. Polyethylene, Teflon ™, or glass wash bottles may be used for sample recovery.

6.2.3 Graduated Cylinder and/or Balance: A graduated cylinder or balance is required to measure condensed water to the nearest 1 ml or 1 g. Graduated cylinders shall have division not >2 ml. Laboratory balances capable of weighing to ± 0.5 g are required.

6.2.4 Polyethylene Storage Containers: 500 ml wide-mouth polyethylene bottles are required to store impinger water samples.

6.2.5 Rubber Policeman and Funnel: A rubber policeman and funnel are required to aid the transfer of material into and out of containers in the field.

6.3 Sample Analysis

6.3.1 Spectrophotometer—B&L 70, 710, 2000, etc., or equivalent; 1 cm pathlength cuvette holder.

6.3.2 Disposable polystyrene cuvettes, pathlengh 1 cm, volume of about 4.5 ml.

6.3.3 Pipettors—Fixed-volume Oxford pipet (250 µl; 500 µl; 1000 µl); adjustable volume Oxford or equivalent pipettor 1–5 ml model, set to 2.50 ml.

6.3.4 Pipet tips for pipettors above.

6.3.5 Parafilm, 2° wide; cut into about 1'' squares.

7.0 *Reagents*

7.1 High purity water: All references to water in this method refer to high purity water (ASTM Type I water or equivalent). The water purity will dictate the lower limits of formaldehyde quantification.

7.2 Silica Gel: Silica gel shall be indicting type, 6–16 mesh. If the silica gel has been used previously, dry at 175°C (350°F) for 2 hours before using. New silica gel may be used as received. Alternatively, other types of desiccants (equivalent or better) may be used.

7.3 Crushed Ice: Quantities ranging from 10–50 lbs may be necessary during a sampling run, depending upon ambient temperature. Samples which have been taken must be stored and shipped cold; sufficient ice for this purpose must be allowed.

7.4 Quaternary ammonium compound stock solution: Prepare a stock solution of dodecyltrimethylammonium chloride (98 percent minimum assay, reagent grade) by dissolving 1.0 gram in 1000 ml water. This solution contains nominally 1000 µg/ml quaternary ammonium compound, and is used as a biocide for some sources which are prone to microbial contamination.

7.5 Pararosaniline: Weigh 0.16 grams pararosaniline (free base; assay of 95 percent or greater, C.I. 42500; Sigma P7632 has been found to be acceptable) into a 100 ml flask. Exercise care, since pararosaniline is a dye and will stain. Using a wash bottle with high-purity water, rinse the walls of the flask. Add no more than 25 ml water. Then, carefully add 20 ml of concentrated hydrochloric acid to the flask. The flask will become warm after the addition of acid. Add a magnetic stir bar to the flask, cap, and place on a magnetic stirrer for approximately 4 hours. Then, add additional water so the total volume is 100 ml. This solution is stable for several months when stored tightly capped at room temperature.

7.6 Sodium sulfite: Weigh 0.10 grams anhydrous sodium sulfite into a 100 ml flask. Dilute to the mark with high purity water. Invert 15–20 times to mix and dissolve the sodium sulfite. This solution must be prepared fresh every day.

7.7 Formaldehyde standard solution: Pipet exactly 2.70 ml of 37 percent formaldehyde solution into a 1000 ml volumetric flask which contains about 500 ml of high-purity water. Dilute to the mark with high-purity water. This solution contains nominally 1000 µg/ml of formaldehyde, and is used to prepare the working formaldehyde standards. The exact formaldehyde concentration may be determined if needed by suitable modification of the sodium sulfite method (Reference: J.F. Walker, Formaldehyde (Third Edition), 1964.). The 1000 µg/ml formaldehyde stock solution is stable for at least a year if kept tightly closed, with the neck of the flask sealed with Parafilm. Store at room temperature.

7.8 Working formaldehyde standards: Pipet exactly 10.0 ml of the 1000 µg/ml formaldehyde stock solution into a 100 ml volumetric flask which is about half full of high-purity water. Dilute to the mark with high-purity water, and invert 15–20 times to mix thoroughly. This solution contains nominally 100 µg/ml formaldehyde. Prepare

the working standards from this 100 µg/ml standard solution and using the Oxford pipets:

Working standard, µ/mL	µL or 100 µg/mL solution	Volumetric flask volume (dilute to mark with water)
0.250	250	100
0.500	500	100
1.00	1000	100
2.00	2000	100
3.00	1500	50

The 100 µg/ml stock solution is stable for 4 weeks if kept refrigerated between analyses. The working standards (0.25–3.00 µg/ml) should be prepared fresh every day, consistent with good laboratory practice for trace analysis. If the laboratory water is not of sufficient purity, it may be necessary to prepare the working standards every day. The laboratory must establish that the working standards are stable—DO NOT assume that your working standards are stable for more than a day unless you have verified this by actual testing for several series of working standards.

8.0 *Sample Collection*

8.1 Because of the complexity of this method, field personnel should be trained in and experienced with the test procedures in order to obtain reliable results.

8.2 Laboratory Preparation

8.2.1 All the components shall be maintained and calibrated according to the procedure described in APTD–0576, unless otherwise specified.

8.2.2 Weigh several 200 to 300 g portions of silica gel in airtight containers to the nearest 0.5 g. Record on each container the total weight of the silica gel plus containers. As an alternative to preweighing the silica gel, it may instead be weighed directly in the impinger or sampling holder just prior to train assembly.

8.3 Preliminary Field Determinations

8.3.1 Select the sampling site and the minimum number of sampling points according to EPA Method 1, 40 CFR part 60, appendix A, or other relevant criteria. Determine the stack pressure, temperature, and range of velocity heads using EPA Method 2, 40 CFR part 60, appendix A. A leak-check of the pitot lines according to Section 3.1 of EPA Method 2, 40 CFR part 60, appendix A, must be performed. Determine the stack gas moisture content using EPA Approximation Method 4,40 CFR part 60, appendix A, or its alternatives to establish estimates of isokinetic sampling rate settings. Determine the stack gas dry molecular weight, as described in EPA Method 2, 40 CFR part 60, appendix A, Section 3.6. If integrated EPA Method 3, 40 CFR part 60, appendix A, sampling is used for molecular weight determination, the integrated bag sample shall be taken simultaneously with, and for the same total length of time as, the sample run.

8.3.2 Select a nozzle size based on the range of velocity heads so that it is not necessary to change the nozzle size in order to maintain isokinetic sampling rates below 28 l/min (1.0 cfm). During the run do not change the nozzle. Ensure that the proper differential pressure gauge is chosen for the range of velocity heads encountered (see Section 2.2 of EPA Method 2, 40 CFR part 60, appendix A).

8.3.3 Select a suitable probe liner and probe length so that all traverse points can be sampled. For large stacks, to reduce the length of the probe, consider sampling from opposite sides of the stack.

8.3.4 A minimum of 30 cu ft of sample volume is suggested for emission sources with stack concentrations not greater than 23,000,000 ppbv. Additional sample volume shall be collected as necessitated by the capacity of the water reagent and analytical detection limit constraint. Reduced sample volume may be collected as long as the final concentration of formaldehyde in the stack sample is greater than 10 (ten) times the detection limit.

8.3.5 Determine the total length of sampling time needed to obtain the identified minimum volume by comparing the anticipated average sampling rate with the volume requirement. Allocate the same time to all traverse points defined by EPA Method 1, 40 CFR part 60, appendix A. To avoid timekeeping errors, the length of time sampled at each traverse point should be an integer or an integer plus 0.5 min.

8.3.6 In some circumstances (e.g., batch cycles) it may be necessary to sample for shorter times at the traverse points and to obtain smaller gas-volume samples. In these cases, careful documentation must be maintained in order to allow accurate calculations of concentrations.

8.4 Preparation of Collection Train

8.4.1 During preparation and assembly of the sampling train, keep all openings where contamination can occur covered with Teflon™ film or aluminum foil until just prior to assembly or until sampling is about to begin.

8.4.2 Place 100 ml of water in each of the first two impingers, and leave the third impinger empty. If additional capacity is required for high expected concentrations of formaldehyde in the stack gas, 200 ml of water per impinger may be used or additional impingers may be used for sampling. Transfer approximately 200 to 300 g of pre-weighed silica gel from its container to the fourth impinger. Care should be taken to ensure that the silica gel is not entrained and carried out from the impinger during sampling. Place the silica gel container in a clean place for later use in the sample recovery. Alternatively, the weight of the silica gel plus impinger may be determined to the nearest 0.5 g and recorded.

8.4.3 With a glass or quartz liner, install the selected nozzle using a Viton-A O-ring when stack temperatures are <260°C (500°F) and a woven glass-fiber gasket when temperatures are higher. See APTD–0576 for details. Other connection systems utilizing either 316 stainless steel or Teflon™ ferrules may be used. Mark the probe with heat-resistant tape or by some other method to denote the proper distance into the stack or duct for each sampling point.

8.4.4 Assemble the train as shown in Figure 1. During assembly, a very light coating of silicone grease may be used on ground-glass joints of the impingers, but the silicone grease should be limited to the outer portion (see APTD–0576) of the ground-glass joints to minimize silicone grease contamination. If necessary, Teflon™ tape may be used to seal leaks. Connect all temperature sensors to an appropriate potentiometer/display unit. Check all temperature sensors at ambient temperatures.

8.4.5 Place crushed ice all around the impingers.

8.4.6 Turn on and set the probe heating system at the desired operating temperature. Allow time for the temperature to stabilize.

8.5 Leak-Check Procedures

8.5.1 Pre-test Leak-check: Recommended, but not required. If the tester elects to conduct the pre-test leak-check, the following procedure shall be used.

8.5.1.1 After the sampling train has been assembled, turn on and set probe heating system at the desired operating temperature. Allow time for the temperature to stabilize. If a Viton-a O-ring or other leak-free connection is used in assembling the probe nozzle to the probe liner, leak-check the train at the sampling site by plugging the nozzle and pulling a 381 mm Hg (15 in Hg) vacuum.

Note: A lower vacuum may be used, provided that the lower vacuum is not exceeded during the test.

If a woven glass fiber gasket is used, do not connect the probe to the train during the leak-check. Instead, leak-check the train by first attaching a carbon-filled leak-check impinger to the inlet and then plugging the inlet and pulling a 381 mm Hg (15 in Hg) vacuum. (A lower vacuum may be used if this lower vacuum is not exceeded during the test.) Next connect the probe to the train and leak-check at about 25 mm Hg (1 in Hg) vacuum. Alternatively, leak-check the probe with the rest of the sampling train in one step at 381 mm Hg (15 in Hg) vacuum. Leakage rates in excess of (a) 4 percent of the average sampling rate or (b) 0.00057 m^3/min (0.02 cfm), whichever is less, are unacceptable.

8.5.1.2 The following leak-check instructions for the sampling train described in APTD–0576 and APTD–0581 may be helpful. Start the pump with the fine-adjust valve fully open and coarse-valve completely closed. Partially open the coarse-adjust valve and slowly close the fine-adjust valve until the desired vacuum is reached. Do not reverse direction of the fine-adjust valve, as liquid will back up into the train. If the desired vacuum is exceeded, either perform the leak-check at this higher vacuum or end the leak-check, as described below, and start over.

8.5.1.3 When the leak-check is completed, first slowly remove the plug from the inlet to the probe. When the vacuum drops to 127 mm (5 in) Hg or less, immediately close the coarse-adjust valve. Switch off the pumping system and reopen the fine-adjust valve. Do not reopen the fine-adjust valve until the coarse-adjust valve has been closed to prevent the liquid in the impingers from being forced backward in the sampling line and silica gel from being entrained backward into the third impinger.

8.5.2 Leak-checks During Sampling Run:

8.5.2.1 If, during the sampling run, a component change (e.g., impinger) becomes necessary, a leak-check shall be conducted immediately after the interruption of sampling and before the change is made. The leak-check shall be done according to the procedure described in Section 10.3.3, except that it shall be done at a vacuum greater than or equal to the maximum value recorded up to that point in the test. If the leakage rate is found to be no greater than 0.0057 m^3/min (0.02 cfm) or 4 percent of the average sampling rate (whichever is less), the results are acceptable. If a higher leakage rate is obtained, the tester must void the sampling run.

Note: Any correction of the sample volume by calculation reduces the integrity of the pollutant concentration data generated and must be avoided.

8.5.2.2 Immediately after component changes, leak-checks are optional. If performed, the procedure described in section 8.5.1.1 shall be used.

8.5.3 Post-test Leak-check:

8.5.3.1 A leak-check is mandatory at the conclusion of each sampling run. The leak-check shall be done with the same procedures as the pre-test leak-check, except that the post-test leak-check shall be conducted at a vacuum greater than or equal to the maximum value reached during the sampling run. If the leakage rate is found to be no greater than 0.00057 m^3/min (0.02 cfm) or 4 percent of the average sampling rate (whichever is less), the results are acceptable. If, however, a higher leakage rate is obtained, the tester shall record the leakage rate and void the sampling run.

8.6 Sampling Train Operation

8.6.1 During the sampling run, maintain an isokinetic sampling rate to within 10 percent of true isokinetic, below 28 l/min (1.0 cfm). Maintain a temperature around the probe of 120°C ± 14°C (248° ± 25°F).

8.6.2 For each run, record the data on a data sheet such as the one shown in Figure 2. Be sure to record the initial dry-gas meter reading. Record the dry-gas meter readings at the beginning and end of each sampling time increment, when changes in flow rates are made, before and after each leak-check, and when sampling is halted. Take other readings required by Figure 2 at least once at each sample point during each time increment and additional readings when significant adjustments (20 percent variation in velocity head readings) necessitate additional adjustments in flow rate. Level and zero the manometer. Because the manometer level and zero may drift due to vibrations and temperature changes, make periodic checks during the traverse.

BILLING CODE 6560–50–P

Figure 2 - Formaldehyde Field Data

Plant . . . . . .

Location . . . . . .

Operator . . . . . .

Date . . . . . .

Run No . . . . . .

Sample box No . . . . . .

Meter box No . . . . . .

Meter ΔH . . . . . .

C Factor . . . . . .

Pitot tube coefficient, Op

SCHEMATIC OF STACK CROSS SECTION

Ambient temperature . . . . . .

Barometric pressure . . . . . .

Assumed moisture, percent . . . .

Probe length, m (ft) . . . . . .

Nozzle Identification No . . . .

Average calibrated nozzle diameter, cm (in.) . . . . . .

Probe heater setting . . . . . .

Leak rate, m^3/min (cfm) . . . . .

Probe liner material . . . . . .

Static pressure, mm Hg (in. Hg) .

Filter No. . . . . .

BILLING CODE 6560–50–C

Traverse point number	Sampling time (e) min.	Vacuum mm Hg (in. Hg)	Stack temperature (T) °C (°F)	Velocity head (ΔP) mm (in) H_2O	Pressure differential across orifice meter mm H_2O (in. H_2O)	Gas sample volume m^3 (ft^3)	Gas sample temperature at dry gas meter		Filter holder temperature °C (°F)	Temperature of gas leaving condenser or last impinger °C (°F)
							Inlet °C (°F)	Outlet °C (°F)		
	.....	.....	.....	.....	.....	.....	.....	.....	.....	.....
	.....	.....	.....	.....	.....	.....	.....	.....	.....	.....
	.....	.....	.....	.....	.....	.....	.....	.....	.....	.....
	.....	.....	.....	.....	.....	.....	.....	.....	.....	.....
	.....	.....	.....	.....	.....	.....	.....	.....	.....	.....
Total	.....	.....	.....	.....	.....	.....	Avg.	Avg.	.....	.....
Average	.....	.....	.....	.....	.....	.....	Avg.	.....	.....	.....

8.6.3 Clean the stack access ports prior to the test run to eliminate the chance of sampling deposited material. To begin sampling, remove the nozzle cap, verify that the probe heating system are at the specified temperature, and verify that the pitot tube and probe are properly positioned. Position the nozzle at the first traverse point, with the tip pointing directly into the gas stream. Immediately start the pump and adjust the flow to isokinetic conditions. Nomographs, which aid in the rapid adjustment of the isokinetic sampling rate without excessive computations, are available. These nomographs are designed for use when the Type S pitot tube coefficient is 0.84 ± 0.02 and the stack gas equivalent density (dry molecular weight) is equal to 29 ± 4. APTD–0576 details the procedure for using the nomographs. If the stack gas molecular weight and the pitot tube coefficient are outside the above ranges, do not use the nomographs unless appropriate steps are taken to compensate for the deviations.

8.6.4 When the stack is under significant negative pressure (equivalent to the height of the impinger stem), take care to close the coarse-adjust valve before inserting the probe into the stack in order to prevent liquid from backing up through the train. If necessary, a low vacuum on the train may have to be started prior to entering the stack.

8.6.5 When the probe is in position, block off the openings around the probe and stack access port to prevent unrepresentative dilution of the gas stream.

8.6.6 Traverse the stack cross section, as required by EPA Method 1, 40 CFR part 60, appendix A, being careful not to bump the probe nozzle into the stack walls when sampling near the walls or when removing or inserting the probe through the access port, in order to minimize the chance of extracting deposited material.

8.6.7 During the test run, make periodic adjustments to keep the temperature around the probe at the proper levels. Add more ice and, if necessary, salt, to maintain a temperature of <20°C (68°F) at the silica gel outlet.

8.6.8 A single train shall be used for the entire sampling run, except in cases where simultaneous sampling is required in two or more separate ducts or at two or more different locations within the same duct, or in cases where equipment failure necessitates a change of trains. An additional train or trains may also be used for sampling when the capacity of a single train is exceeded.

8.6.9 When two or more trains are used, separate analyses of components from each train shall be performed. If multiple trains have been used because the capacity of a single train would be exceeded, first impingers from each train may be combined, and second impingers from each train may be combined.

8.6.10 At the end of the sampling run, turn off the coarse-adjust valve, remove the probe and nozzle from the stack, turn off the pump, record the final dry gas meter reading, and conduct a post-test leak-check. Also, check the pitot lines as described in EPA Method 2, 40 CFR part 60, appendix A. The lines must pass this leak-check in order to validate the velocity-head data.

8.6.11 Calculate percent isokineticity (see Method 2) to determine whether the run was valid or another test should be made.

8.7 Sample Preservation and Handling

8.7.1 Samples from most sources applicable to this method have acceptable holding times using normal handling practices (shipping samples iced, storing in refrigerator at 2°C until analysis). However, forming section stacks and other sources using waste water sprays may be subject to microbial contamination. For these sources, a biocide (quaternary ammonium compound solution) may be added to collected samples to improve sample stability and method ruggedness.

8.7.2 Sample holding time: Samples should be analyzed within 14 days of collection. Samples must be refrigerated/kept cold for the entire period preceding analysis. After the samples have been brought to room temperature for analysis, any analyses needed should be performed on the same day. Repeated cycles of warming the samples to room temperature/refrigerating/rewarming, then analyzing again, etc., have not been investigated in depth to evaluate if analyte levels remain stable for all sources.

8.7.3 Additional studies will be performed to evaluate whether longer sample holding times are feasible for this method.

8.8 Sample Recovery

8.8.1 Preparation:

8.8.1.1 Proper cleanup procedure begins as soon as the probe is removed from the stack at the end of the sampling period. Allow the probe to cool. When the probe can be handled safely, wipe off all external particulate matter near the tip of the probe nozzle and place a cap over the tip to prevent losing or gaining particulate matter. Do not cap the probe tightly while the sampling train is cooling because a vacuum will be created, drawing liquid from the impingers back through the sampling train.

8.8.1.2 Before moving the sampling train to the cleanup site, remove the probe from the sampling train and cap the open outlet, being careful not to lose any condensate that might be present. Remove the umbilical cord from the last impinger and cap the impinger. If a flexible line is used, let any condensed water or liquid drain into the impingers. Cap off any open impinger inlets and outlets. Ground glass stoppers, Teflon ™ caps, or caps of other inert materials may be used to seal all openings.

8.8.1.3 Transfer the probe and impinger assembly to an area that is clean and protected from wind so that the chances of contaminating or losing the sample are minimized.

8.8.1.4 Inspect the train before and during disassembly, and note any abnormal conditions.

8.8.1.5 Save a portion of the washing solution (high purity water) used for cleanup as a blank.

8.8.2 Sample Containers:

8.8.2.1 Container 1: Probe and Impinger Catches. Using a graduated cylinder, measure to the nearest ml, and record the volume of the solution in the first three impingers. Alternatively, the solution may be weighed to the nearest 0.5 g. Include any condensate in the probe in this determination. Transfer the combined impinger solution from the graduated cylinder into the polyethylene bottle. Taking care that dust on the outside of the probe or other exterior surfaces does not get into the sample, clean all surfaces to which the sample is exposed (including the probe nozzle, probe fitting, probe liner, first three impingers, and impinger connectors) with water. Use less than 400 ml for the entire waste (250 ml would be better, if possible). Add the rinse water to the sample container.

8.8.2.1.1 Carefully remove the probe nozzle and rinse the inside surface with water from a wash bottle. Brush with a bristle brush and rinse until the rinse shows no visible particles, after which make a final rinse of the inside surface. Brush and rinse the inside parts of the Swagelok (or equivalent) fitting with water in a similar way.

8.8.2.1.2 Rinse the probe liner with water. While squirting the water into the upper end of the probe, tilt and rotate the probe so that

all inside surfaces will be wetted with water. Let the water drain from the lower end into the sample container. The tester may use a funnel (glass or polyethylene) to aid in transferring the liquid washes to the container. Follow the rinse with a bristle brush. Hold the probe in an inclined position, and squirt water into the upper end as the probe brush is being pushed with a twisting action through the probe. Hold the sample container underneath the lower end of the probe, and catch any water and particulate matter that is brushed from the probe. Run the brush through the probe three times or more. Rinse the brush with water and quantitatively collect these washings in the sample container. After the brushing, make a final rinse of the probe as describe above.

Note: Two people should clean the probe in order to minimize sample losses. Between sampling runs, brushes must be kept clean and free from contamination.

8.8.2.1.3 Rinse the inside surface of each of the first three impingers (and connecting tubing) three separate times. Use a small portion of water for each rinse, and brush each surface to which the sample is exposed with a bristle brush to ensure recovery of fine particulate matter. Make a final rinse of each surface and of the brush, using water.

8.8.2.1.4 After all water washing and particulate matter have been collected in the sample container, tighten the lid so the sample will not leak out when the container is shipped to the laboratory. Mark the height of the fluid level to determine whether leakage occurs during transport. Label the container clearly to identify its contents.

8.8.2.1.5 If the first two impingers are to be analyzed separately to check for breakthrough, separate the contents and rinses of the two impingers into individual containers. Care must be taken to avoid physical carryover from the first impinger to the second. Any physical carryover of collected moisture into the second impinger will invalidate a breakthrough assessment.

8.8.2.2 Container 2: Sample Blank. Prepare a blank by using a polyethylene container and adding a volume of water equal to the total volume in Container 1. Process the blank in the same manner as Container 1.

8.8.2.3 Container 3: Silica Gel. Note the color of the indicating silica gel to determine whether it has been completely spent and make a notation of its condition. The impinger containing the silica gel may be used as a sample transport container with both ends sealed with tightly fitting caps or plugs. Ground-glass stoppers or Teflon™ caps maybe used. The silica gel impinger should then be labeled, covered with aluminum foil, and packaged on ice for transport to the laboratory. If the silica gel is removed from the impinger, the tester may use a funnel to pour the silica gel and a rubber policeman to remove the silica gel from the impinger. It is not necessary to remove the small amount of dust particles that may adhere to the impinger wall and are difficult to remove. Since the gain in weight is to be used for moisture calculations, do not use water or other liquids to transfer the silica gel. If a balance is available in the field, the spent silica gel (or silica gel plus impinger) may be weighed to the nearest 0.5 g.

8.8.2.4 Sample containers should be placed in a cooler, cooled by (although not in contact with) ice. Putting sample bottles in Zip-Lock™ bags can aid in maintaining the integrity of the sample labels. Sample containers should be placed vertically to avoid leakage during shipment. Samples should be cooled during shipment so they will be received cold at the laboratory. It is critical that samples be chilled immediately after recovery. If the source is susceptible to microbial contamination from wash water (e.g. forming section stack), add biocide as directed in section 8.2.5.

8.8.2.5 A quaternary ammonium compound can be used as a biocide to stabilize samples against microbial degradation following collection. Using the stock quaternary ammonium compound (QAC) solution; add 2.5 ml QAC solution for every 100 ml of recovered sample volume (estimate of volume is satisfactory) immediately after collection. The total volume of QAC solution must be accurately known and recorded, to correct for any dilution caused by the QAC solution addition.

8.8.3 Sample Preparation for Analysis 8.8.3.1 The sample should be refrigerated if the analysis will not be performed on the day of sampling. Allow the sample to warm at room temperature for about two hours (if it has been refrigerated) prior to analyzing.

8.8.3.2 Analyze the sample by the pararosaniline method, as described in Section 11. If the color-developed sample has an absorbance above the highest standard, a suitable dilution in high purity water should be prepared and analyzed.

9.0 *Quality Control*

9.1 Sampling: See EPA Manual 600/4–77–02b for Method 5 quality control.

9.2 Analysis: The quality assurance program required for this method includes the analysis of the field and method blanks, and procedure validations. The positive identification and quantitation of formaldehyde are dependent on the integrity of the samples received and the precision and accuracy of the analytical methodology. Quality assurance procedures for this method are designed to monitor the performance of the analytical methodology and to provide the required information to take corrective action if problems are observed in laboratory operations or in field sampling activities.

9.2.1 Field Blanks: Field blanks must be submitted with the samples collected at each sampling site. The field blanks include the sample bottles containing aliquots of sample recover water, and water reagent. At a minimum, one complete sampling train will be assembled in the field staging area, taken to the sampling area, and leak-checked at the beginning and end of the testing (or for the same total number of times as the actual sampling train). The probe of the blank train must be heated during the sample test. The train will be recovered as if it were an actual test sample. No gaseous sample will be passed through the blank sampling train.

9.2.2 Blank Correction: The field blank formaldehyde concentrations will be subtracted from the appropriate sample formaldehyde concentrations. Blank formaldehyde concentrations above 0.25 μg/ml should be considered suspect, and subtraction from the sample formaldehyde concentrations should be performed in a manner acceptable to the Administrator.

9.2.3 Method Blanks: A method blank must be prepared for each set of analytical operations, to evaluate contamination and artifacts that can be derived from glassware, reagents, and sample handling in the laboratory.

10 *Calibration*

10.1 Probe Nozzle: Probe nozzles shall be calibrated before their initial use in the field. Using a micrometer, measure the inside diameter of the nozzle to the nearest 0.025 mm (0.001 in). Make measurements at three separate places across the diameter and obtain the average of the measurements. The difference between the high and low numbers shall not exceed 0.1 mm (0.004 in). When the nozzle becomes nicked or corroded, it shall be repaired and calibrated, or replaced with a calibrated nozzle before use. Each nozzle must be permanently and uniquely identified.

10.2 Pitot Tube: The Type S pitot tube assembly shall be calibrated according to the procedure outlined in Section 4 of EPA Method 2, or assigned a nominal coefficient of 0.84 if it is not visibly nicked or corroded and if it meets design and intercomponent spacing specifications.

10.3 Metering System

10.3.1 Before its initial use in the field, the metering system shall be calibrated according to the procedure outlined in APTD–0576. Instead of physically adjusting the dry-gas meter dial readings to correspond to the wet-test meter readings, calibration factors may be used to correct the gas meter dial readings mathematically to the proper values. Before calibrating the metering system, it is suggested that a leak-check be conducted. For metering systems having diaphragm pumps, the normal leak-check procedure will not delete leakages with the pump. For these cases, the following leak-check procedure will apply: Make a ten-minute calibration run at 0.00057 m^3/min (0.02 cfm). At the end of the run, take the difference of the measured wet-test and dry-gas meter volumes and divide the difference by 10 to get the leak rate. The leak rate should not exceed 0.00057 m^3/min (0.02 cfm).

10.3.2 After each field use, check the calibration of the metering system by performing three calibration runs at a single intermediate orifice setting (based on the previous field test). Set the vacuum at the maximum value reached during the test series. To adjust the vacuum, insert a valve between the wet-test meter and the inlet of the metering system. Calculate the average value of the calibration factor. If the calibration has changed by more than 5 percent, recalibrate the meter over the full range of orifice settings, as outlined in APTD–0576.

10.3.3 Leak-check of metering system: The portion of the sampling train from the pump to the orifice meter (see Figure 1)

should be leak-checked prior to initial use and after each shipment. Leakage after the pump will result in less volume being recorded than is actually sampled. Use the following procedure: Close the main valve on the meter box. Insert a one-hole rubber stopper with rubber tubing attached into the orifice exhaust pipe. Disconnect and vent the low side of the orifice manometer. Close off the low side orifice tap. Pressurize the system to 13–18 cm (5–7 in) water column by blowing into the rubber tubing. Pinch off the tubing and observe the manometer for 1 min. A loss of pressure on the manometer indicates a leak in the meter box. Leaks must be corrected.

Note: If the dry-gas meter coefficient values obtained before and after a test series differ by >5 percent, either the test series must be voided or calculations for test series must be performed using whichever meter coefficient value (i.e., before or after) gives the lower value of total sample volume.

10.4 Probe Heater: The probe heating system must be calibrated before its initial use in the field according to the procedure outlined in APTD–0576. Probes constructed according to APTD–0581 need not be calibrated if the calibration curves in APTD–0576 are used.

10.5 Temperature gauges: Use the procedure in section 4.3 of USEPA Method 2 to calibrate in-stack temperature gauges. Dial thermometers such as are used for the dry gas meter and condenser outlet, shall be calibrated against mercury-in-glass thermometers.

10.6 Barometer: Adjust the barometer initially and before each test series to agree to within ±2.5 mm Hg (0.1 in Hg) of the mercury barometer. Alternately, if a National Weather Service Station (NWSS) is located at the same altitude above sea level as the test site, the barometric pressure reported by the NWSS may be used.

10.7 Balance: Calibrate the balance before each test series, using Class S standard weights. The weights must be within ±0.5 percent of the standards, or the balance must be adjusted to meet these limits.

11.0 *Procedure for Analysis.*

The working formaldehyde standards (0.25, 0.50, 1.0, 2.0, and 3.0 µg/ml) are analyzed and a calibration curve is calculated for each day's analysis. The standards should be analyzed first to ensure that the method is working properly prior to analyzing the samples. In addition, a sample of the high-purity water should also be analyzed and used as a ''0'' formaldehyde standard.

The procedure for analysis of samples and standards is identical: Using the pipet set to 2.50 ml, pipet 2.50 ml of the solution to be analyzed into a polystyrene cuvette. Using the 250 µl pipet, pipet 250 µl of the pararosaniline reagent solution into the cuvette. Seal the top of the cuvette with a Parafilm square and shake at least 30 seconds to ensure the solution in the cuvette is well-mixed. Peel back a corner of the Parafilm so the next reagent can be added. Using the 250 µl pipet, pipet 250 µl of the sodium sulfite reagent solution into the cuvette. Reseal the cuvette with the Parafilm, and again shake for about 30 seconds to mix the solution in the cuvette. Record the time of addition of the sodium sulfite and let the color develop at room temperature for 60 minutes. Set the spectrophotometer to 570 nm and set to read in Absorbance Units. The spectrophotometer should be equipped with a holder for the 1-cm pathlength cuvettes. Place cuvette(s) containing high-purity water in the spectrophotometer and adjust to read 0.000 AU.

After the 60 minutes color development period, read the standard and samples in the spectrophotometer. Record the absorbance reading for each cuvette. The calibration curve is calculated by linear regression, with the formaldehyde concentration as the ''x'' coordinate of the pair, and the absorbance reading as the ''y'' coordinate. The procedure is very reproducible, and typically will yield values similar to these for the calibration curve:

Correlation Coefficient: 0.9999
Slope: 0.50
Y-Intercept: 0.090

The formaldehyde concentration of the samples can be found by using the trend-line feature of the calculator or computer program used for the linear regression. For example, the TI–55 calculators use the ''X'' key (this gives the predicted formaldehyde concentration for the value of the absorbance you key in for the sample). Multiply the formaldehyde concentration from the sample by the dilution factor, if any, for the sample to give the formaldehyde concentration of the original, undiluted, sample (units will be micrograms/ml).

11.1 Notes on the Pararosaniline Procedure

11.1.1 The pararosaniline method is temperature-sensitive. However, the small fluctuations typical of a laboratory will not significantly affect the results.

11.1.2 The calibration curve is linear to beyond 4 ''µg/ml'' formaldehyde, however, a research-grade spectrophotometer is required to reproducibly read the high absorbance values. Consult your instrument manual to evaluate the capability of the spectrophotometer.

11.1.3 The quality of the laboratory water used to prepare standards and make dilutions is critical. It is important that the cautions given in the Reagents section be observed. This procedure allows quantitation of formaldehyde at very low levels, and thus it is imperative to avoid contamination from other sources of formaldehyde and to exercise the degree of care required for trace analyses.

11.1.4 The analyst should become familiar with the operation of the Oxford or equivalent pipettors before using them for an analysis. Follow the instructions of the manufacturer; one can pipet water into a tared container on any analytical balance to check pipet accuracy and precision. This will also establish if the proper technique is being used. Always use a new tip for each pipetting operation.

11.1.5 This procedure follows the recommendations of ASTM Standard Guide D 3614, reading all solutions versus water in the reference cell. This allows the absorbance of the blank to be tracked on a daily basis. Refer to ASTM D 3614 for more information.

12.0 *Calculations*

Carry out calculations, retaining at least one extra decimal figure beyond that of the acquired data. Round off figures after final calculations.

12.1 Calculations of Total Formaldehyde

12.1.1 To determine the total formaldehyde in mg, use the following equation if biocide was not used:

Total mg formaldehyde=

$$C_d \times V \times DF \times 0.001 \text{ mg/µg}$$

Where:

C_d = measured conc. formaldehyde, µg/ml
V = total volume of stack sample, ml
DF = dilution factor

12.1.2 To determine the total formaldehyde in mg, use the following equation if biocide was used:

Total mg formaldehyde=

$$\frac{C_d \times V}{(V - B) \times DF \times 0.001 \text{ mg/µg}}$$

Where:

C_d = measured conc. formaldehyde, µg/ml
V = total volume of stack sample, ml
B = total volume of biocide added to sample, ml
DF = dilution factor

12.2 Formaldehyde concentration (mg/m^3) in stack gas. Determine the formaldehyde concentration (mg/m^3) in the stack gas using the following equation: Formaldehyde concentration (mg/m^3) =

$$\frac{K \times [\text{total formaldehyde, mg}]}{V_m(\text{std})}$$

Where:

K = 35.31 cu ft/m^3 for V_m(std) in English units, or
K = 1.00 m^3/m^3 for V_m(std) in metric units
V_m(std) = volume of gas sample measured by a dry gas meter, corrected to standard conditions, dscm (dscf)

12.3 Average dry gas meter temperature and average orifice pressure drop are obtained from the data sheet.

12.4 Dry Gas Volume: Calculate V_m(std) and adjust for leakage, if necessary, using the equation in Section 6.3 of EPA Method 5, 40 CFR part 60, appendix A.

12.5 Volume of Water Vapor and Moisture Content: Calculated the volume of water vapor and moisture content from equations 5–2 and 5–3 of EPA Method 5.

13.0 *Method Performance*

The precision of this method is estimated to be better than ±5 percent, expressed as ± the percent relative standard deviation.

14.0 *Pollution Prevention.* (Reserved)

15.0 *Waste Management.* (Reserved)

16.0 *References*

R.R. Miksch, et al., Analytical Chemistry, November 1981, 53 pp. 2118–2123.
J.F. Walker, Formaldehyde, Third Edition, 1964.
US EPA 40 CFR, part 60, Appendix A, Test Methods 1–5

Method 318—Extractive FTIR Method for the Measurement of Emissions From the Mineral Wool and Wool Fiberglass Industries

1.0 *Scope and Application*

This method has been validated and approved for mineral wool and wool fiberglass sources. This method may not be applied to other source categories without validation and approval by the Administrator according to the procedures in Test Method 301, 40 CFR part 63, appendix A. For sources seeking to apply FTIR to other source categories, Test Method 320 (40 CFR part 63, appendix A) may be utilized.

1.1 Scope. The analytes measured by this method and their CAS numbers are:

Carbon Monoxide 630–08–0
Carbonyl Sulfide 463–58–1
Formaldehyde 50–00–0
Methanol 1455–13–6
Phenol 108–95–2

1.2 Applicability

1.2.1 This method is applicable for the determination of formaldehyde, phenol, methanol, carbonyl sulfide (COS) and carbon monoxide (CO) concentrations in controlled and uncontrolled emissions from manufacturing processes using phenolic resins. The compounds are analyzed in the mid-infrared spectral region (about 400 to 4000 cm − 1 or 25 to 2.5 μm). Suggested analytical regions are given below (Table 1). Slight deviations from these recommended regions may be necessary due to variations in moisture content and ammonia concentration from source to source.

TABLE 1.—EXAMPLE ANALYTICAL REGIONS

Compound	Analytical region (cm − 1) FL_m − FU_m	Potential interferants
Formaldehyde	2840.93 − 2679.83	Water, Methane.
Phenol	1231.32 − 1131.47	Water, Ammonia, Methane.
Methanol	1041.56 − 1019.95	Water, Ammonia.
COS[a]	2028.4 − 2091.9	Water, CO_2, CO.
CO[a]	2092.1 − 2191.8	Water, CO_2, COS.

[a] Suggested analytical regions assume about 15 percent moisture and CO_2, and that COS and CO have about the same absorbance (in the range of 10 to 50 ppm). If CO and COS are hundreds of ppm or higher, then CO_2 and moisture interference is reduced. If CO or COS is present at high concentration and the other at low concentration, then a shorter cell pathlength may be necessary to measure the high concentration component.

1.2.2 This method does not apply when: (a) Polymerization of formaldehyde occurs, (b) moisture condenses in either the sampling system or the instrumentation, and (c) when moisture content of the gas stream is so high relative to the analyte concentrations that it causes severe spectral interference.

1.3 Method Range and Sensitivity

1.3.1 The analytical range is a function of instrumental design and composition of the gas stream. Theoretical detection limits depend, in part, on (a) the absorption coefficient of the compound in the analytical frequency region, (b) the spectral resolution, (c) interferometer sampling time, (d) detector sensitivity and response, and (e) absorption pathlength.

1.3.2 Practically, there is no upper limit to the range. The practical lower detection limit is usually higher than the theoretical value, and depends on (a) moisture content of the flue gas, (b) presence of interferants, and (c) losses in the sampling system. In general, a 22 meter pathlength cell in a suitable sampling system can achieve practical detection limits of 1.5 ppm for three compounds (formaldehyde, phenol, and methanol) at moisture levels up to 15 percent by volume. Sources with uncontrolled emissions of CO and COS may require a 4 meter pathlength cell due to high concentration levels. For these two compounds, make sure absorbance of highest concentration component is <1.0.

1.4 Data Quality Objectives

1.4.1 In designing or configuring the system, the analyst first sets the data quality objectives, i.e., the desired lower detection limit (DL_i) and the desired analytical uncertainty (AU_i) for each compound. The instrumental parameters (factors b, c, d, and e in Section 1.3.1) are then chosen to meet these requirements, using Appendix D of the FTIR Protocol.

1.4.2 Data quality for each application is determined, in part, by measuring the RMS (Root Mean Square) noise level in each analytical spectral region (Appendix C of the FTIR Protocol). The RMS noise is defined as the RMSD (Root Mean Square Deviation) of the absorbance values in an analytical region from the mean absorbance value of the region. Appendix D of the FTIR Protocol defines the MAU_{im} (minimum analyte uncertainty of the ith analyte in the mth analytical region). The MAU is the minimum analyte concentration for which the analytical uncertainty limit (AU_i) can be maintained: if the measured analyte concentration is less than MAU_i, then data quality is unacceptable. Table 2 gives some example DL and AU values along with calculated areas and MAU values using the protocol procedures.

TABLE 2.—EXAMPLE PRE-TEST PROTOCOL CALCULATIONS

Protocol value	Form	Phenol	Methanol	Protocol appendix
Reference concentration[a] (ppm-meters)/K	3.016	3.017	5.064	
Reference Band Area	8.2544	16.6417	4.9416	B
DL (ppm-meters)/K	0.1117	0.1117	0.1117	B
AU	0.2	0.2	0.2	B
CL	0.02234	0.02234	0.02234	B
FL	2679.83	1131.47	1019.95	B
FU	2840.93	1231.32	1041.56	B
FC	2760.38	1181.395	1030.755	B
AAI (ppm-meters)/K	0.18440	0.01201	0.00132	B
RMSD	2.28E–03	1.21E–03	1.07E–03	C
MAU (ppm-meters)/K	4.45E–02	7.26E–03	4.68E–03	D
MAU (ppm at 22)	0.0797	0.0130	0.0084	D

[a] Concentration units are: ppm concentration of the reference sample (ASC), times the path length of the FTIR cell used when the reference spectrum was measured (meters), divided by the absolute temperature of the reference sample in Kelvin (K), or (ppm-meters)/K.

2.0 *Summary of Method*

2.1 Principle

2.1.1 Molecules are composed of chemically bonded atoms, which are in constant motion. The atomic motions result in bond deformations (bond stretching and bond-angle bending). The number of fundamental (or independent) vibrational motions depends on the number of atoms (N) in the molecule. At typical testing temperatures, most molecules are in the ground-state vibrational state for most of their fundamental vibrational motions. A molecule can undergo a transition from its ground state (for a particular vibration) to the first excited state by absorbing a quantum of light at a frequency characteristic of the molecule and the molecular motion. Molecules also undergo rotational transitions by absorbing energies in the far-infrared or microwave spectral regions. Rotational transition absorbencies are superimposed on the vibrational absorbencies to give a characteristic shape to each rotational-vibrational absorbance ''band.''

2.1.2 Most molecules exhibit more than one absorbance band in several frequency regions to produce an infrared spectrum (a characteristic pattern of bands or a ''fingerprint'') that is unique to each molecule. The infrared spectrum of a molecule depends on its structure (bond lengths, bond angles, bond strengths, and atomic masses). Even small differences in structure can produce significantly different spectra.

2.1.3 Spectral band intensities vary with the concentration of the absorbing compound. Within constraints, the relationship between absorbance and sample concentration is linear. Sample spectra are compared to reference spectra to determine the species and their concentrations.

2.2 Sampling and Analysis

2.2.1 Flue gas is continuously extracted from the source, and the gas or a portion of the gas is conveyed to the FTIR gas cell, where a spectrum of the flue gas is recorded. Absorbance band intensities are related to sample concentrations by Beer's Law. Where:

$$A_v = \sum a_i b c_i \qquad (6)$$

A_v = absorbance of the ith component at the given frequency, ν.
a = absorption coefficient of the ith component at the frequency, ν.
b = path length of the cell.
c = concentration of the ith compound in the sample at frequency ν.

2.2.2 After identifying a compound from the infrared spectrum, its concentration is determined by comparing band intensities in the sample spectrum to band intensities in ''reference spectra'' of the formaldehyde, phenol, methanol, COS and CO. These reference spectra are available in a permanent soft copy from the EPA spectral library on the EMTIC bulletin board. The source may also prepare reference spectra according to Section 4.5 of the FTIR Protocol.

Note: Reference spectra not prepared according to the FTIR Protocol are not acceptable for use in this test method. Documentation detailing the FTIR Protocol steps used in preparing any non-EPA reference spectra shall be included in each test report submitted by the source.

2.3 Operator Requirements. The analyst must have some knowledge of source sampling and of infrared spectral patterns to operate the sampling system and to choose a suitable instrument configuration. The analyst should also understand FTIR instrument operation well enough to choose an instrument configuration consistent with the data quality objectives.

3.0 *Definitions*

See Appendix A of the *FTIR* Protocol.

4.0 *Interferences*

4.1 Analytical (or Spectral) Interferences. Water vapor. High concentrations of ammonia (hundreds of ppm) may interfere with the analysis of low concentrations of methanol (1 to 5 ppm). For CO, carbon dioxide and water may be interferants. In cases where COS levels are low relative to CO levels, CO and water may be interferants.

4.2 Sampling System Interferences. Water, if it condenses, and ammonia, which reacts with formaldehyde.

5.0 *Safety*

5.1 Formaldehyde is a suspected carcinogen; therefore, exposure to this compound must be limited. Proper monitoring and safety precautions must be practiced in any atmosphere with potentially high concentrations of CO.

5.2 This method may involve sampling at locations having high positive or negative pressures, high temperatures, elevated heights, high concentrations of hazardous or toxic pollutants, or other diverse sampling conditions. It is the responsibility of the tester(s) to ensure proper safety and health practices, and to determine the applicability of regulatory limitations before performing this test method.

6.0 *Equipment and Supplies*

The equipment and supplies are based on the schematic of a sampling train shown in Figure 1. Either the evacuated or purged sampling technique may be used with this sampling train. Alternatives may be used, provided that the data quality objectives of this method are met.

6.1 Sampling Probe. Glass, stainless steel, or other appropriate material of sufficient length and physical integrity to sustain heating, prevent adsorption of analytes, and to reach gas sampling point.

6.2 Particulate Filters. A glass wool plug (optional) inserted at the probe tip (for large particulate removal) and a filter rated at 1-micron (e.g., Balston™) for fine particulate removal, placed immediately after the heated probe.

6.3 Sampling Line/Heating System. Heated (maintained at 250 ± 25 degrees F) stainless steel, Teflon™, or other inert material that does not adsorb the analytes, to transport the sample to analytical system.

6.4 Stainless Steel Tubing. Type 316, e.g., ⅜ in. diameter, and appropriate length for heated connections.

6.5 Gas Regulators. Appropriate for individual gas cylinders.

BILLING CODE 6560–50–P

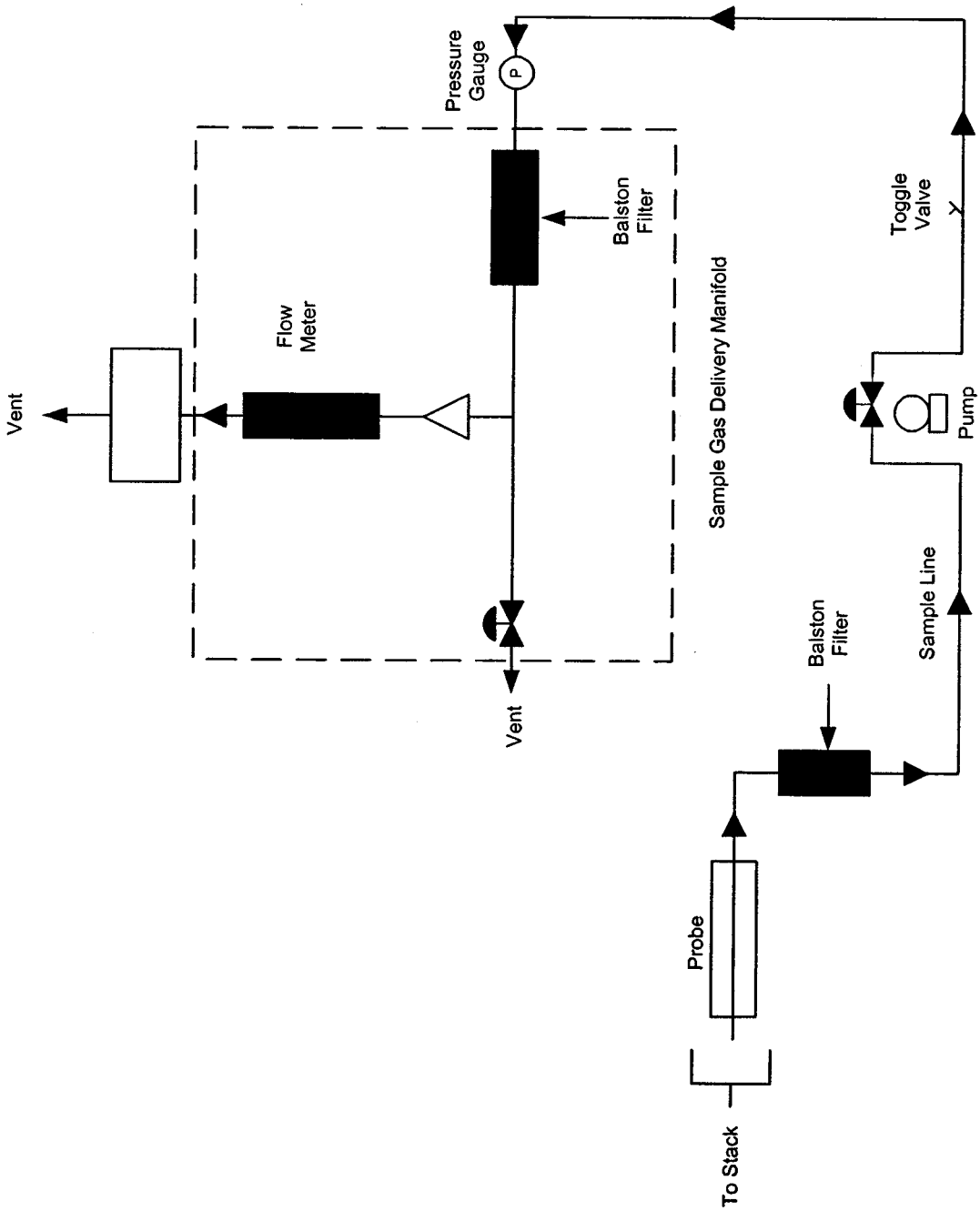

Figure 1. The extractive FTIR sampling system.

BILLING CODE 6560–50–C

6.6 Teflon™ Tubing. Diameter (e.g., ⅜ in.) and length suitable to connect cylinder regulators.

6.7 Sample Pump. A leak-free pump (e.g., KNF™), with by-pass valve, capable of pulling sample through entire sampling system at a rate of about 10 to 20 L/min. If placed before the analytical system, heat the pump and use a pump fabricated from materials non-reactive to the target pollutants. If the pump is located after the instrument, systematically record the sample pressure in the gas cell.

6.8 Gas Sample Manifold. A heated manifold that diverts part of the sample stream to the analyzer, and the rest to the by-pass discharge vent or other analytical instrumentation.

6.9 Rotameter. A calibrated 0 to 20 L/min range rotameter.

6.10 FTIR Analytical System. Spectrometer and detector, capable of measuring formaldehyde, phenol, methanol, COS and CO to the predetermined minimum detectable level. The system shall include a personal computer with compatible software that provides real-time updates of the spectral profile during sample collection and spectral collection.

6.11 FTIR Cell Pump. Required for the evacuated sampling technique, capable of evacuating the FTIR cell volume within 2 minutes. The FTIR cell pump should allow the operator to obtain at least 8 sample spectra in 1 hour.

6.12 Absolute Pressure Gauge. Heatable and capable of measuring pressure from 0 to 1000 mmHg to within ±2.5 mmHg (e.g., Baratron™).

6.13 Temperature Gauge. Capable of measuring the cell temperature to within ±2°C.

7.0 *Reagents and Standards*

7.1 Ethylene (Calibration Transfer Standard). Obtain NIST traceable (or Protocol) cylinder gas.

7.2 Nitrogen. Ultra high purity (UHP) grade.

7.3 Reference Spectra. Obtain reference spectra for the target pollutants at concentrations that bracket (in ppm-meter/K) the emission source levels. Also, obtain reference spectra for SF_6 and ethylene. Suitable concentrations are 0.0112 to 0.112 (ppm-meter)/K for SF_6 and 5.61 (ppm-meter)/K or less for ethylene. The reference spectra shall meet the criteria for acceptance outlined in Section 2.2.2. The optical density (ppm-meters/K) of the reference spectrum must match the optical density of the sample spectrum within (less than) 25 percent.

8.0 *Sample Collection, Preservation, and Storage*

Sampling should be performed in the following sequence: Collect background, collect CTS spectrum, collect samples, collect post-test CTS spectrum, verify that two copies of all data were stored on separate computer media.

8.1 Pretest Preparations and Evaluations. Using the procedure in Section 4.0 of the *FTIR Protocol*, determine the optimum sampling system configuration for sampling the target pollutants. Table 2 gives some example values for AU, DL, and MAU. Based on a study (Reference 1), an FTIR system using 1 cm^{-1} resolution, 22 meter path length, and a broad band MCT detector was suitable for meeting the requirements in Table 2. Other factors that must be determined are:

a. Test requirements: AU_i, $CMAX_i$, DL_i, OFU_i, and t_{AN} for each.

b. Interferants: See Table 1.

c. Sampling system: L_S', P_{min}, P_S', T_S', t_{SS}, V_{SS}; fractional error, MIL.

d. Analytical regions: 1 through N_m, FL_m, FC_m, and FU_m, plus interferants, FFU_m, FFL_m, wavenumber range FNU to FNL. See Tables 1 and 2.

8.1.1 If necessary, sample and acquire an initial spectrum. Then determine the proper operational pathlength of the instrument to obtain non-saturated absorbances of the target analytes.

8.1.2 Set up the sampling train as shown in Figure 1.

8.2 Sampling System Leak-check. Leak-check from the probe tip to pump outlet as follows: Connect a 0- to 250-mL/min rate meter (rotameter or bubble meter) to the outlet of the pump. Close off the inlet to the probe, and note the leakage rate. The leakage rate shall be ≤200 mL/min.

8.3 Analytical System Leak-check.

8.3.1 For the evacuated sample technique, close the valve to the FTIR cell, and evacuate the absorption cell to the minimum absolute pressure P_{min}. Close the valve to the pump, and determine the change in pressure ΔP_v after 2 minutes.

8.3.2 For both the evacuated sample and purging techniques, pressurize the system to about 100 mmHg above atmospheric pressure. Isolate the pump and determine the change in pressure ΔP_p after 2 minutes.

8.3.3 Measure the barometric pressure, P_b in mmHg.

8.3.4 Determine the percent leak volume $\%V_L$ for the signal integration time t_{SS} and for ΔP_{max}, i.e., the larger of ΔP_v or ΔP_p, as follows:

$$\%V_L = 50\, t_{SS} \frac{\Delta P_{max}}{P_{SS}} \qquad (2)$$

Where:

50 = 100% divided by the leak-check time of 2 minutes.

8.3.5 Leak volumes in excess of 4 percent of the sample system volume V_{SS} are unacceptable.

8.4 Background Spectrum. Evacuate the gas cell to ≤5 mmHg, and fill with dry nitrogen gas to ambient pressure. Verify that no significant amounts of absorbing species (for example water vapor and CO_2) are present. Collect a background spectrum, using a signal averaging period equal to or greater than the averaging period for the sample spectra. Assign a unique file name to the background spectrum. Store the spectra of the background interferogram and processed single-beam background spectrum on two separate computer media (one is used as the back-up). If continuous sampling will be used during sample collection, collect the background spectrum with nitrogen gas flowing through the cell at the same pressure and temperature as will be used during sampling.

8.5 Pre-Test Calibration Transfer Standard. Evacuate the gas cell to ≤5 mmHg absolute pressure, and fill the FTIR cell to atmospheric pressure with the CTS gas. Or, purge the cell with 10 cell volumes of CTS gas. Record the spectrum. If continuous sampling will be used during sample collection, collect the CTS spectrum with CTS gas flowing through the cell at the same pressure and temperature as will be used during sampling.

8.6 Samples

8.6.1 Evacuated Samples. Evacuate the absorbance cell to ≤5 mmHg absolute pressure. Fill the cell with flue gas to ambient pressure and record the spectrum. Before taking the next sample, evacuate the cell until no further evidence of absorption exists. Repeat this procedure to collect at least 8 separate spectra (samples) in 1 hour.

8.6.2 Purge Sampling. Purge the FTIR cell with 10 cell volumes of flue gas and at least for about 10 minutes. Discontinue the gas cell purge, isolate the cell, and record the sample spectrum and the pressure. Before taking the next sample, purge the cell with 10 cell volumes of flue gas.

8.6.3 Continuous Sampling. Spectra can be collected continuously while the FTIR cell is being purged. The sample integration time, t_{ss}, the sample flow rate through the FTIR gas cell, and the total run time must be chosen so that the collected data consist of at least 10 spectra with each spectrum being of a separate cell volume of flue gas. More spectra can be collected over the run time and the total run time (and number of spectra) can be extended as well.

8.7 Sampling QA, Data Storage and Reporting

8.7.1 Sample integration times should be sufficient to achieve the required signal-to-noise ratios. Obtain an absorbance spectrum by filling the cell with nitrogen. Measure the RMSD in each analytical region in this absorbance spectrum. Verify that the number of scans is sufficient to achieve the target MAU (Table 2).

8.7.2 Identify all sample spectra with unique file names.

8.7.3 Store on two separate computer media a copy of sample interferograms and processed spectra. The data shall be available to the Administrator on request for the length of time specified in the applicable regulation.

8.7.4 For each sample spectrum, document the sampling conditions, the sampling time (while the cell was being filled), the time the spectrum was recorded, the instrumental conditions (path length, temperature, pressure, resolution, integration time), and the spectral file name. Keep a hard copy of these data sheets.

8.8 Signal Transmittance. While sampling, monitor the signal transmittance through the instrumental system. If signal transmittance (relative to the background) drops below 95 percent in any spectral region where the sample does not absorb infrared energy, obtain a new background spectrum.

8.9 Post-run CTS. After each sampling run, record another CTS spectrum.

8.10 Post-test QA

8.10.1 Inspect the sample spectra immediately after the run to verify that the

gas matrix composition was close to the expected (assumed) gas matrix.

8.10.2 Verify that the sampling and instrumental parameters were appropriate for the conditions encountered. For example, if the moisture is much greater than anticipated, it will be necessary to use a shorter path length or dilute the sample.

8.10.3 Compare the pre and post-run CTS spectra. They shall agree to within −5 percent. See FTIR Protocol, Appendix E.

9.0 *Quality Control*

Follow the quality assurance procedures in the method, including the analysis of pre and post-run calibration transfer standards (Sections 8.5 and 8.9) and the post-test quality assurance procedures in Section 8.10.

10.0 *Calibration and Standardization*

10.1 Signal-to-Noise Ratio (S/N). The S/N shall be sufficient to meet the MAU in each analytical region.

10.2 Absorbance Pathlength. Verify the absorbance path length by comparing CTS spectra to reference spectra of the calibration gas(es). See FTIR Protocol, Appendix E.

10.3 Instrument Resolution. Measure the line width of appropriate CTS band(s) and compare to reference CTS spectra to verify instrumental resolution.

10.4 Apodization Function. Choose appropriate apodization function. Determine any appropriate mathematical transformations that are required to correct instrumental errors by measuring the CTS. Any mathematical transformations must be documented and reproducible.

10.5 FTIR Cell Volume. Evacuate the cell to ≤5 mmHg. Measure the initial absolute temperature (T_i) and absolute pressure (P_i). Connect a wet test meter (or a calibrated dry gas meter), and slowly draw room air into the cell. Measure the meter volume (V_m), meter absolute temperature (T_m), and meter absolute pressure (P_m), and the cell final absolute temperature (T_f) and absolute pressure (P_f). Calculate the FTIR cell volume V_{ss}, including that of the connecting tubing, as follows:

$$V_{SS} = \frac{V_m \frac{P_m}{T_m}}{\left[\frac{P_f}{T_f} - \frac{P_i}{T_i}\right]} \qquad (8)$$

As an alternative to the wet test meter/calibrated dry gas meter procedure, measure the inside dimensions of the cell cylinder and calculate its volume.

11.0 *Procedure*

Refer to Sections 4.6–4.11, Sections 5, 6, and 7, and the appendices of the FTIR Protocol.

12.0 *Data Analysis and Calculations*

a. Data analysis is performed using appropriate reference spectra whose concentrations can be verified using CTS spectra. Various analytical programs are available to relate sample absorbance to a concentration standard. Calculated concentrations should be verified by analyzing spectral baselines after mathematically subtracting scaled reference spectra from the sample spectra. A full description of the data analysis and calculations may be found in the FTIR Protocol (Sections 4.0, 5.0, 6.0 and appendices).

b. Correct the calculated concentrations in sample spectra for differences in absorption pathlength between the reference and sample spectra by:

$$C_{corr} = \left[\frac{L_r}{L_s}\right]\left[\frac{T_s}{T_r}\right]C_{calc} \qquad (9)$$

Where:

C_{corr} = The pathlength corrected concentration.

C_{calc} = The initial calculated concentration (output of the Multicomp program designed for the compound).

L_r = The pathlength associated with the reference spectra.

L_s = The pathlength associated with the sample spectra.

T_s = The absolute temperature (K) of the sample gas.

T_r = The absolute gas temperature (K) at which reference spectra were recorded.

13.0 *Reporting and Recordkeeping*

All interferograms used in determining source concentration shall be stored for the period of time required in the applicable regulation. The Administrator has the option of requesting the interferograms recorded during the test in electronic form as part of the test report.

14.0 *Method Performance*

Refer to the FTIR Protocol.

15.0 *Pollution Prevention.* [Reserved]

16.0 *Waste Management*

Laboratory standards prepared from the formaldehyde and phenol are handled according to the instructions in the materials safety data sheets (MSDS).

17.0 *References*

(1) ''Field Validation Test Using Fourier Transform Infrared (FTIR) Spectrometry To Measure Formaldehyde, Phenol and Methanol at a Wool Fiberglass Production Facility.'' Draft. U.S. Environmental Protection Agency Report, Entropy, Inc., EPA Contract No. 68D20163, Work Assignment I–32, December 1994 (docket item II–A–13).

(2) ''Method 301—Field Validation of Pollutant Measurement Methods from Various Waste Media,'' 40 CFR part 63, appendix A.

[FR Doc. 99–12758 Filed 6–11–99; 8:45 am]

BILLING CODE 6560–50–P

GENERAL SERVICES ADMINISTRATION

41 CFR Part 101–47

[FPMR Amendment H–203]

RIN 3090–AG39

Utilization and Disposal of Real Property Appraisal

AGENCY: Office of Governmentwide Policy, GSA.

ACTION: Final rule.

SUMMARY: This rule amends the Federal Property Management Regulations to clarify and strengthen agency responsibilities for conducting appraisals on real property that is available for disposal. It ensures the reliability, integrity, and confidentiality of those appraisals.

EFFECTIVE DATE: June 14, 1999.

FOR FURTHER INFORMATION CONTACT: Mr. John Q. Martin, Director, Redeployment Services Division at (202) 501–0084.

SUPPLEMENTARY INFORMATION:

A. Regulatory Flexibility Act

This final rule is not required to be published in the **Federal Register** for notice and comment; therefore, the Regulatory Flexibility Act does not apply.

B. Executive Order 12866

The General Services Administration (GSA) has determined that this rule is not a significant regulatory action for the purposes of Executive Order 12866 of September 30, 1993.

C. Paperwork Reduction Act

The Paperwork Reduction Act does not apply because the revisions do not impose recordkeeping or information collection requirements, or the collection of information from offerors, contractors, or members of the public which require the approval of the Office of Management and Budget (OMB) under 44 U.S.C. 501 *et seq.*

D. Small Business Regulatory Enforcement Fairness Act

This final rule is also exempt from congressional review prescribed under 5 U.S.C. 801 since it relates solely to agency management and personnel.

List of Subjects in 41 CFR Part 101–47

Administrative practice and procedure, Government property management, Homeless, Surplus Government property.

For the reasons stated in the preamble, 41 CFR part 101–47 is amended as follows: