5–14–99
Vol. 64 No. 93
Pages 26271–26652

federal register

Friday
May 14, 1999

Briefings on how to use the Federal Register
For information on briefings in Washington, DC, see announcement on the inside cover of this issue.

The **FEDERAL REGISTER** is published daily, Monday through Friday, except official holidays, by the Office of the Federal Register, National Archives and Records Administration, Washington, DC 20408, under the Federal Register Act (44 U.S.C. Ch. 15) and the regulations of the Administrative Committee of the Federal Register (1 CFR Ch. I). The Superintendent of Documents, U.S. Government Printing Office, Washington, DC 20402 is the exclusive distributor of the official edition.

The **Federal Register** provides a uniform system for making available to the public regulations and legal notices issued by Federal agencies. These include Presidential proclamations and Executive Orders, Federal agency documents having general applicability and legal effect, documents required to be published by act of Congress, and other Federal agency documents of public interest.

Documents are on file for public inspection in the Office of the Federal Register the day before they are published, unless the issuing agency requests earlier filing. For a list of documents currently on file for public inspection, see http://www.nara.gov/fedreg.

The seal of the National Archives and Records Administration authenticates the Federal Register as the official serial publication established under the Federal Register Act. Under 44 U.S.C. 1507, the contents of the **Federal Register** shall be judicially noticed.

The **Federal Register** is published in paper and on 24x microfiche. It is also available online at no charge as one of the databases on GPO Access, a service of the U.S. Government Printing Office.

The online edition of the **Federal Register** is issued under the authority of the Administrative Committee of the Federal Register as the official legal equivalent of the paper and microfiche editions (44 U.S.C. 4101 and 1 CFR 5.10). It is updated by 6 a.m. each day the **Federal Register** is published and it includes both text and graphics from Volume 59, Number 1 (January 2, 1994) forward.

GPO Access users can choose to retrieve online **Federal Register** documents as TEXT (ASCII text, graphics omitted), PDF (Adobe Portable Document Format, including full text and all graphics), or SUMMARY (abbreviated text) files. Users should carefully check retrieved material to ensure that documents were properly downloaded.

On the World Wide Web, connect to the **Federal Register** at http://www.access.gpo.gov/nara. Those without World Wide Web access can also connect with a local WAIS client, by Telnet to swais.access.gpo.gov, or by dialing (202) 512-1661 with a computer and modem. When using Telnet or modem, type swais, then log in as guest with no password.

For more information about GPO Access, contact the GPO Access User Support Team by E-mail at gpoaccess@gpo.gov; by fax at (202) 512–1262; or call (202) 512–1530 or 1–888–293–6498 (toll free) between 7 a.m. and 5 p.m. Eastern time, Monday–Friday, except Federal holidays.

The annual subscription price for the **Federal Register** paper edition is $555, or $607 for a combined **Federal Register,** Federal Register Index and List of CFR Sections Affected (LSA) subscription; the microfiche edition of the **Federal Register** including the Federal Register Index and LSA is $220. Six month subscriptions are available for one-half the annual rate. The charge for individual copies in paper form is $8.00 for each issue, or $8.00 for each group of pages as actually bound; or $1.50 for each issue in microfiche form. All prices include regular domestic postage and handling. International customers please add 25% for foreign handling. Remit check or money order, made payable to the Superintendent of Documents, or charge to your GPO Deposit Account, VISA, MasterCard or Discover. Mail to: New Orders, Superintendent of Documents, P.O. Box 371954, Pittsburgh, PA 15250–7954.

There are no restrictions on the republication of material appearing in the **Federal Register.**

How To Cite This Publication: Use the volume number and the page number. Example: 64 FR 12345.

SUBSCRIPTIONS AND COPIES

PUBLIC	
Subscriptions:	
Paper or fiche	**202–512–1800**
Assistance with public subscriptions	**512–1806**
General online information	**202–512–1530; 1–888–293–6498**
Single copies/back copies:	
Paper or fiche	**512–1800**
Assistance with public single copies	**512–1803**
FEDERAL AGENCIES	
Subscriptions:	
Paper or fiche	**523–5243**
Assistance with Federal agency subscriptions	**523–5243**

FEDERAL REGISTER WORKSHOP

THE FEDERAL REGISTER: WHAT IT IS AND HOW TO USE IT

FOR: Any person who uses the Federal Register and Code of Federal Regulations.

WHO: Sponsored by the Office of the Federal Register.

WHAT: Free public briefings (approximately 3 hours) to present:

1. The regulatory process, with a focus on the Federal Register system and the public's role in the development regulations.
2. The relationship between the Federal Register and Code of Federal Regulations.
3. The important elements of typical Federal Register documents.
4. An introduction to the finding aids of the FR/CFR system.

WHY: To provide the public with access to information necessary to research Federal agency regulations which directly affect them. There will be no discussion of specific agency regulations.

WASHINGTON, DC

WHEN: May 18, 1999 at 9:00 am.

WHERE: Office of the Federal Register
Conference Room
800 North Capitol Street, NW.
Washington, DC
(3 blocks north of Union Station Metro)

RESERVATIONS: 202–523–4538

Printed on recycled paper.

Contents

Federal Register

Vol. 64, No. 93

Friday, May 14, 1999

Agricultural Marketing Service
RULES
Avocados grown in—
South Florida, 26271–26273
NOTICES
Meetings:
Burley Tobacco Advisory Committee, 26358

Agricultural Research Service
NOTICES
Meetings:
Dietary Guidelines Advisory Committee, 26358–26359

Agriculture Department
See Agricultural Marketing Service
See Agricultural Research Service
See Animal and Plant Health Inspection Service
See Forest Service
See National Agricultural Statistics Service

Animal and Plant Health Inspection Service
PROPOSED RULES
Animal welfare:
Marine mammals; human handling, care, treatment, and transportation, 26330

Arts and Humanities, National Foundation
See National Foundation on the Arts and the Humanities

Blind or Severely Disabled, Committee for Purchase From People Who Are
See Committee for Purchase From People Who Are Blind or Severely Disabled

Census Bureau
NOTICES
Agency information collection activities:
Proposed collection; comment request, 26360–26362

Centers for Disease Control and Prevention
NOTICES
Grants and cooperative agreements; availability, etc.:
Laboratory Medicine Sentinel Monitoring Network, 26417–26418
Surveillance of Vaccine Preventable Diseases in Managed Care Settings, 26419–26421
Inventions, Government-owned; availability for licensing, 26421–26423
Patent licenses; non-exclusive, exclusive, or partially exclusive:
SKC, Inc., 26423–26424

Civil Rights Commission
NOTICES
Meetings; State advisory committees:
Illinois, 26360

Coast Guard
RULES
Drawbridge operations:
Louisiana, 26295
Ports and waterways safety:
New York Harbor, NY; safety zone, 26295–26297
Vocational rehabilitation and education:
Reservists' education—
Montgomery GI Bill-Selected Reserve; rates payable increase, 26297–26298
PROPOSED RULES
Drawbridge operations:
Maryland, 26349–26351

Commerce Department
See Census Bureau
See International Trade Administration
See National Oceanic and Atmospheric Administration
See National Telecommunications and Information Administration

Committee for Purchase From People Who Are Blind or Severely Disabled
NOTICES
Procurement list; additions and deletions, 26359–26360

Commodity Futures Trading Commission
NOTICES
Contract market proposals:
Chicago Mercantile Exchange—
Three month Eurodollar FRAs, 26365–26366

Defense Department
See Navy Department
RULES
Vocational rehabilitation and education:
Reservists' education—
Montgomery GI Bill-Selected Reserve; rates payable increase, 26297–26298
NOTICES
Agency information collection activities:
Proposed collection; comment request, 26366–26368

Employment and Training Administration
NOTICES
Grants and cooperative agreements; availability, etc.:
Welfare-to-work program—
Census 2000 Employment Project, 26440–26451
Job Training Partnership Act:
Targeted jobs tax credit program—
Lower living standard income level; economically disadvantaged, definition, 26452–26457

Employment Standards Administration
NOTICES
Minimum wages for Federal and federally-assisted construction; general wage determination decisions, 26458–26459

Energy Department
See Energy Information Administration
See Federal Energy Regulatory Commission
NOTICES
Environmental statements; availability, etc.:
Tritium Supply and Recycling Record of Decision, 26369–26386
Natural gas exportation and importation:
Cascade Natural Gas Corp., et al., 26386–26387

Energy Information Administration
NOTICES
Agency information collection activities:
Proposed collection; comment request, 26387–26388

Environmental Protection Agency
RULES
Air pollutants, hazardous; national emission standards:
Equivalent emission limitations by permit; implementation, 26311–26314
Withdrawal, 26311
Air pollution; standards of performance for new stationary sources:
Fossil fuel-fired boilers and turbines; three new test methods for velocity and volumetric flow rate in stacks or ducts, 26483–26568
Air quality implementation plans:
Preparation, adoption, and submittal—
Oxides of nitrogen emissions; State implementation plans; findings and submission requirements, 26298–26306
Air quality implementation plans; approval and promulgation; various States:
Maine, 26306–26311
Water pollution control:
Clean Water Act—
Oil and grease and non-polar material; test procedure guidelines, 26315–26327
PROPOSED RULES
Air pollution; standards of performance for new stationary sources:
Fossil fuel-fired boilers and turbines; three new test methods for velocity and volumetric flow rate in stacks or ducts, 26570
Air quality implementation plans; approval and promulgation; various States:
Maine, 26352
NOTICES
Agency information collection activities:
Proposed collection; comment request, 26405–26409
Environmental statements; availability, etc.:
Agency statements—
Comment availability, 26409
Weekly receipts, 26409–26410
Meetings:
Alternative-fueled vehicles; air quality modeling and infrastructure issues workshop, 26410–26412

Federal Aviation Administration
NOTICES
Passenger facility charges; applications, etc.:
Mobile Regional Airport, AL, 26474–26475

Federal Communications Commission
RULES
Radio broadcasting:
Radio broadcast services; CFR correction, 26327
NOTICES
Agency information collection activities:
Reporting and recordkeeping requirements, 26412–26413

Federal Deposit Insurance Corporation
NOTICES
Agency information collection activities:
Submission for OMB review; comment request
Correction, 26481

Federal Energy Regulatory Commission
RULES
Natural Gas Act:
Facilities construction and operation, etc.; filing of applications, 26571–26621
NOTICES
Electric rate and corporate regulation filings:
Foote Creek III, LLC, et al., 26390–26395
Genstar Energy, L.L.C., et al., 26395–26400
Milliken Facility Trust B-1, et al., 26400–26403
Potomac Electric Power Co. et al., 26403–26404
Hydroelectric applications, 26404–26405
Applications, hearings, determinations, etc.:
ANR Pipeline Co., 26388
Northwest Pipeline Corp., 26389
Tennessee Gas Pipeline Co., 26389
Williston Basin Interstate Pipeline Co., 26389–26390

Federal Mediation and Conciliation Service
NOTICES
Grants and cooperative agreements; availability, etc.:
Labor-management cooperation program, 26413–26417

Federal Reserve System
NOTICES
Agency information collection activities:
Submission for OMB review; comment request
Correction, 26481
Banks and bank holding companies:
Change in bank control, 26417

Food and Drug Administration
RULES
Biological products:
Albumin (human), plasma protein fraction (human), and immune globulin (human), 26282–26287
Food additives:
Adhesives coatings and components—
1,3-propanediamine, etc., 26281–26282
PROPOSED RULES
Biological products:
Albumin (human), plasma protein fraction (human), and immune globulin (human), 26344–26348
Human drugs, animal drugs, biological products, and devices; foreign establishments registration and listing, 26330–26344
NOTICES
Reports and guidance documents; availability, etc.:
New animal drugs approval for minor uses and for minor species; guiance availability, 26424
Year 2000 (Y2K) computer compliance guide; guidance for FDA personnel, 26424–26426

Forest Service
NOTICES
Environmental statements; availability, etc.:
Eldorado and Tahoe National Forests, CA, 26359

General Services Administration
NOTICES
Agency information collection activities:
Proposed collection; comment request, 26366–26368

Health and Human Services Department
See Centers for Disease Control and Prevention
See Food and Drug Administration
See Health Care Financing Administration
See Indian Health Service

NOTICES
Meetings:
Dietary Guidelines Advisory Committee, 26358–26359

Health Care Financing Administration
NOTICES
Meetings:
Practicing Physicians Advisory Council, 26426–26427

Housing and Urban Development Department
RULES
Low income housing:
Rental voucher and certificate programs (Section 8) and tenant-based assistance (Section 8); statutory merger, 26631–26651
NOTICES
Agency information collection activities:
Proposed collection; comment request, 26428–26429
Grant and cooperative agreement awards:
Lead-based paint hazard control—
National Institute of Buiding Sciences, 26429–26430
Grants and cooperative agreements; availability, etc.:
Facilities to assist homeless—
Excess and surplus Federal property, 26430–26435

Indian Affairs Bureau
NOTICES
Agency information collection activities:
Proposed collection; comment request, 26427
Tribal-State Compacts approval; Class III (casino) gambling:
Quileute Tribe, WA, 26435
Quinault Indian Nation, WA, 26435
Skokomish Indian Tribe, WA, 26435

Indian Health Service
NOTICES
Agency information collection activities:
Proposed collection; comment request, 26427

Interior Department
See Indian Affairs Bureau
See Land Management Bureau
See Minerals Management Service
See Surface Mining Reclamation and Enforcement Office

Internal Revenue Service
PROPOSED RULES
Income taxes:
Stock and other personal property disposition; recognized loss allocation and foreign tax credit limitation computation; hearing cancellation, 26348–26349
NOTICES
Agency information collection activities:
Proposed collection; comment request, 26479–26480
Meetings:
Electronic Tax Administration Advisory Committee, 26480

International Trade Administration
NOTICES
Countervailing duties:
Iron-metal castings from—
India, 26363–26364
North American Free Trade Agreement (NAFTA); binational panel reviews:
Porcelain-on-steel cookware from—
Mexico, 26364
Steel wire rod from—
Canada, 26364–26365

Labor Department
See Employment and Training Administration
See Employment Standards Administration
See Mine Safety and Health Administration
NOTICES
Grants and cooperative agreements; availability, etc.:
Women in Apprenticeship and Nontraditional Occupations Act—
Title IV-D demonstration program, 26623–26630
Meetings:
Presidential Task Force on Employment of Adults with Disabilities, 26439–26440

Land Management Bureau
NOTICES
Environmental statements; availability, etc.:
Caribou National Forest phosphate leasing; record of decision; correction, 26435
South Baggs Area Natural Gas Development Project, WY, 26435–26436
Wyodak Coalbed Methane Project, WY, 26436–26437
Meetings:
Resource Advisory Councils—
Northwest Colorado, 26437
Survey plat filings:
Arizona, 26437–26438
Withdrawal and reservation of lands:
New Mexico, 26438–26439

Minerals Management Service
NOTICES
Meetings:
Minerals Management Advisory Board, 26439

Mine Safety and Health Administration
NOTICES
Agency information collection activities:
Proposed collection; comment request, 26459–26462

National Aeronautics and Space Administration
NOTICES
Agency information collection activities:
Proposed collection; comment request, 26366–26368

National Agricultural Statistics Service
NOTICES
Committees; establishment, renewal, termination, etc.:
Agricultural Statistics Advisory Committee, 26359
Correction, 26481

National Credit Union Administration
NOTICES
Agency information collection activities:
Submission for OMB review; comment request, 26462

National Foundation on the Arts and the Humanities
NOTICES
Meetings:
Combined Arts Advisory Panel, 26462–26463

National Highway Traffic Safety Administration
PROPOSED RULES
Insurer reporting requirements:
Insurers required to file reports; lists, 26352–26355

National Oceanic and Atmospheric Administration
RULES
Fishery conservation and management:
West Coast States and Western Pacific fisheries—
West coast salmon, 26328–26329
PROPOSED RULES
Endangered and threatened species:
Summer steelhead trout, 26355–26357

National Science Foundation
NOTICES
Meetings:
Electrical and Communications Systems Special Emphasis Panel, 26463
Information and Intelligent Systems Special Emphasis Panel, 26463

National Telecommunications and Information Administration
NOTICES
Enhancement of .us domain space; open electronic mailing list, 26365

Navy Department
NOTICES
Agency information collection activities:
Proposed collection; comment request, 26368–26369

Nuclear Regulatory Commission
NOTICES
Environmental statements; availability, etc.:
Envirocare of Utah, Inc., 26463–26465

Pension Benefit Guaranty Corporation
RULES
Single-employer plans:
Allocation of assets—
Interests assumptions for valuing benefits, 26287–26288
NOTICES
Multiemployer plans:
Interest rates and assumptions, 26465–26466

Presidio Trust
NOTICES
Common carrier services:
Wireless communication services—
Wireless telecommuncations facilities site; application from Bay Area Cellular Telephone Co.; comment request, 26466

Public Health Service
See Centers for Disease Control and Prevention
See Food and Drug Administration
See Indian Health Service

Securities and Exchange Commission
NOTICES
Committees; establishment, renewal, termination, etc.:
Securities and Exchange Commission Advisory Committee on Technology, 26470–26471
Meetings; Sunshine Act, 26471
Applications, hearings, determinations, etc.:
New England Funds Trust I, et al., 26466–26467
Public utility holding company filings, 26467–26470

Small Business Administration
RULES
Business loans:
Premier certified lenders program; pilot program extended and certified development company authority expanded, 26273–26275
Small business size standards:
Engineering services, architectural services, and surveying and mapping services, 26275–26281
NOTICES
Disaster loan areas:
Illinois, 26471
License surrenders:
Enterprise Capital Corp.; revocation, 26471
Enterprise Fund, L.P., 26471–26472
Polaris Capital Corp., 26472

Social Security Administration
NOTICES
Agency information collection activities:
Proposed collection; comment request, 26472–26474

State Department
NOTICES
Arms Export Control Act:
Determinations, 26474

Statistical Reporting Service
See National Agricultural Statistics Service

Surface Mining Reclamation and Enforcement Office
RULES
Permanent program and abandoned mine land reclamation plan submissions:
West Virginia, 26288–26295

Surface Transportation Board
NOTICES
Motor carriers:
Finance applications—
Coach USA, Inc., 26475–26476
Railroad operation, acquisition, construction, etc.:
Delaware & Hudson Railway Co., 26476–26477
Garden City Western Railway, Inc., 26477–26478
Norfolk Southern Railway Co., 26477
Port of Tillamook Bay, 26478

Transportation Department
See Coast Guard
See Federal Aviation Administration
See National Highway Traffic Safety Administration
See Surface Transportation Board

Treasury Department
See Internal Revenue Service

Veterans Affairs Department
RULES
Vocational rehabilitation and education:
Reservists' education—
Montgomery GI Bill-Selected Reserve; rates payable increase, 26297–26298

Separate Parts In This Issue

Part II
Environmental Protection Agency, 26483–26569, 26570

Part III
Department of Energy, Federal Energy Regulatory Commission, 26571–26621

Part IV
Department of Labor,, 26623–26630

Part V
Department of Housing and Urban Development, 26631–26651

Reader Aids
Consult the Reader Aids section at the end of this issue for phone numbers, online resources, finding aids, reminders, and notice of recently enacted public laws.

CFR PARTS AFFECTED IN THIS ISSUE

A cumulative list of the parts affected this month can be found in the Reader Aids section at the end of this issue.

7 CFR
915.....26271

9 CFR
Proposed Rules:
3.....26330

13 CFR
120.....26273
121.....26275

18 CFR
2.....26572
153.....26572
157.....26572
284.....26572
375.....26572
380.....26572
385.....26572

21 CFR
178.....26281
640.....26282
Proposed Rules:
207.....26330
607.....26330
640.....26344
807.....26330

24 CFR
248.....26632
791.....26632
792.....26632
982.....26632

26 CFR
Proposed Rules:
1.....26348

29 CFR
4044.....26287

30 CFR
948.....26288

33 CFR
117.....26295
165.....26295
Proposed Rules:
117 (2 documents) 26349, 26350

38 CFR
21 (3 documents) 26297,

40 CFR
51.....26298
52.....26306
60.....26484
63 (2 documents) 26311
136.....26315
260.....26315
Proposed Rules:
52.....26352
60.....26570

47 CFR
73.....26327

49 CFR
Proposed Rules:
544.....26352

50 CFR
660.....26328
Proposed Rules:
223.....26355
224.....26355
226.....26355

Rules and Regulations

Federal Register
Vol. 64, No. 93
Friday, May 14, 1999

This section of the FEDERAL REGISTER contains regulatory documents having general applicability and legal effect, most of which are keyed to and codified in the Code of Federal Regulations, which is published under 50 titles pursuant to 44 U.S.C. 1510.

The Code of Federal Regulations is sold by the Superintendent of Documents. Prices of new books are listed in the first FEDERAL REGISTER issue of each week.

DEPARTMENT OF AGRICULTURE

Agricultural Marketing Service

7 CFR Part 915

[Docket No. FV99–915–1 FR]

Avocados Grown in South Florida; Increased Assessment Rate

AGENCY: Agricultural Marketing Service, USDA.

ACTION: Final rule.

SUMMARY: This rule increases the assessment rate from $0.08 to $0.16 per 55-pound bushel container or equivalent of avocados established for the Avocado Administrative Committee (Committee) under Marketing Order No. 915 for the 1999–2000 and subsequent fiscal years. The Committee is responsible for local administration of the marketing order which regulates the handling of avocados grown in South Florida. Authorization to assess avocado handlers enables the Committee to incur expenses that are reasonable and necessary to administer the program. The fiscal year began on April 1 and ends March 31. The assessment rate will remain in effect indefinitely unless modified, suspended, or terminated.

EFFECTIVE DATE: May 17, 1999.

FOR FURTHER INFORMATION CONTACT: Doris Jamieson, Southeast Marketing Field Office, Fruit and Vegetable Programs, AMS, USDA, P.O. Box 2276; Winter Haven, FL 33883–2276; telephone: (941) 299–4770, Fax: (941) 299–5169; or George Kelhart, Technical Advisor, Marketing Order Administration Branch, Fruit and Vegetable Programs, AMS, USDA, room 2525–S, P.O. Box 96456, Washington, DC 20090–6456; telephone: (202) 720–2491, Fax: (202) 720–5698. Small businesses may request information on complying with this regulation, or obtain a guide on complying with fruit, vegetable, and specialty crop marketing agreements and orders by contacting Jay Guerber, Marketing Order Administration Branch, Fruit and Vegetable Programs, AMS, USDA, P.O. Box 96456, room 2525–S, Washington, DC 20090–6456; telephone (202) 720–2491, Fax: (202) 720–5698, or E-mail: Jay.Guerber@usda.gov. You may view the marketing agreement and order small business compliance guide at the following web site: http://www.ams.usda.gov/fv/moab.html.

SUPPLEMENTARY INFORMATION: This rule is issued under Marketing Agreement No. 121 and Order No. 915, both as amended (7 CFR part 915), regulating the handling of avocados grown in South Florida, hereinafter referred to as the ''order.'' The marketing agreement and order are effective under the Agricultural Marketing Agreement Act of 1937, as amended (7 U.S.C. 601–674), hereinafter referred to as the ''Act.''

The Department of Agriculture (Department) is issuing this rule in conformance with Executive Order 12866.

This rule has been reviewed under Executive Order 12988, Civil Justice Reform. Under the marketing order now in effect, Florida avocado handlers are subject to assessments. Funds to administer the order are derived from such assessments. It is intended that the assessment rate as issued herein will be applicable to all assessable avocados beginning April 1, 1999, and continue until amended, suspended, or terminated. This rule will not preempt any State or local laws, regulations, or policies, unless they present an irreconcilable conflict with this rule.

The Act provides that administrative proceedings must be exhausted before parties may file suit in court. Under section 608c(15)(A) of the Act, any handler subject to an order may file with the Secretary a petition stating that the order, any provision of the order, or any obligation imposed in connection with the order is not in accordance with law and request a modification of the order or to be exempted therefrom. Such handler is afforded the opportunity for a hearing on the petition. After the hearing the Secretary would rule on the petition. The Act provides that the district court of the United States in any district in which the handler is an inhabitant, or has his or her principal place of business, has jurisdiction to review the Secretary's ruling on the petition, provided an action is filed not later than 20 days after the date of the entry of the ruling.

This rule increases the assessment rate established for the Committee for the 1999–2000 and subsequent fiscal years from $0.08 per 55-pound bushel container or equivalent to $0.16 per 55-pound container or equivalent of South Florida avocados handled.

The Florida avocado marketing order provides authority for the Committee, with the approval of the Department, to formulate an annual budget of expenses and collect assessments from handlers to administer the program. The members of the Committee are producers and handlers of South Florida avocados. They are familiar with the Committee's needs and with the costs for goods and services in their local area and are thus in a position to formulate an appropriate budget and assessment rate. The assessment rate is formulated and discussed in a public meeting. Thus, all directly affected persons have an opportunity to participate and provide input.

For the 1998–1999 and subsequent fiscal years, the Committee recommended, and the Department approved, an assessment rate that would continue in effect from fiscal year to fiscal year unless modified, suspended, or terminated by the Secretary upon recommendation and information submitted by the Committee or other information available to the Secretary.

The Committee met on January 13, 1999, and unanimously recommended 1999–2000 expenditures of $167,335 and an assessment rate of $0.16 per 55-pound bushel container or equivalent of avocados handled. In comparison, last year's budgeted expenditures were $174,344. The assessment rate of $0.16 is $0.08 higher than the previous rate. For the 1998-99 fiscal period, the Committee voted to lower its assessment rate from $0.16 to $0.08 to reduce the funds in its operating reserve. It wanted to bring its reserve closer to one year's operating expenses. With this accomplished, the Committee voted to return the assessment rate to the previous level of $0.16 to cover 1999–2000 expenses. As discussed later, the Committee expects to use interest income and reserve funds to cover some of its anticipated expenses during 1999–2000 because the $0.16 per 55-pound bushel container or equivalent

assessment rate is expected to generate $144,000, which is $23,335 less than the Committee's budgeted expenses.

The major expenditures recommended by the Committee for the 1999–2000 year include $46,000 for salaries, $39,500 for production research, $27,000 for local and national enforcement, $10,040 for employee benefits, $8,955 for insurance and bonds, and $5,500 for travel. Budgeted expenses for these items in 1998–99 were $46,000, $41,500, $32,000, $9,778, $8,516, and $7,000 respectively.

The assessment rate recommended by the Committee was derived by dividing anticipated expenses by expected shipments of Florida avocados. Avocado shipments for the year are estimated at 900,000 55-pound bushel containers which should provide $144,000 in assessment income. Income derived from handler assessments, along with interest income and funds from the Committee's authorized reserve, should be adequate to cover budgeted expenses. Funds in the reserve (currently $187,615) will be kept within the maximum of 3 fiscal years' operational expenses permitted by the order (§§ 915.42 and 915.142).

The assessment rate established by this rule will continue in effect indefinitely unless modified, suspended, or terminated by the Secretary upon recommendation and information submitted by the Committee or other available information.

Although this assessment rate will be in effect for an indefinite period, the Committee will continue to meet prior to or during each fiscal period to recommend a budget of expenses and consider recommendations for modification of the assessment rate. The dates and times of Committee meetings are available from the Committee or the Department. Committee meetings are open to the public and interested persons may express their views at these meetings. The Department will evaluate Committee recommendations and other available information to determine whether modification of the assessment rate is needed. Further rulemaking will be undertaken as necessary. The Committee's 1999–2000 budget and those for subsequent fiscal years would be reviewed and, as appropriate, approved by the Department.

Pursuant to requirements set forth in the Regulatory Flexibility Act (RFA), the Agricultural Marketing Service (AMS) has considered the economic impact of this rule on small entities. Accordingly, AMS has prepared this final regulatory flexibility analysis.

The purpose of the RFA is to fit regulatory actions to the scale of business subject to such actions in order that small businesses will not be unduly or disproportionately burdened. Marketing orders issued pursuant to the Act, and the rules issued thereunder, are unique in that they are brought about through group action of essentially small entities acting on their own behalf. Thus, both statutes have small entity orientation and compatibility.

There are approximately 149 producers of avocados in the production area and approximately 48 handlers subject to regulation under the marketing order. Small agricultural producers have been defined by the Small Business Administration (13 CFR 121.601) as those having annual receipts less than $500,000, and small agricultural service firms are defined as those whose annual receipts are less than $5,000,000.

The average price for fresh avocados during the 1996–97 season was $13.20 per 55-pound bushel box equivalent for all domestic shipments and the total shipments were 917,861 bushels. Approximately 10 percent of all handlers handled 90 percent of the South Florida avocado shipments during that season. Many handlers ship other tropical fruit and vegetable products which are not included in the Committee data but would contribute further to handler receipts. Using the average price per 55-pound container or equivalent, about 90 percent of the avocado handlers could be considered small businesses under SBA's definition and about 10 percent of the handlers could be considered large businesses. The majority of handlers and producers of Florida avocados may be classified as small entities.

This rule increases the assessment rate established for the Committee and collected from handlers for the 1999–2000 and subsequent fiscal years from $0.08 per 55-pound bushel container or equivalent to $0.16 per 55-pound bushel container or equivalent of avocados. The Committee unanimously recommended 1999–2000 expenditures of $167,335 and an assessment rate of $0.16 per 55-pound bushel container or equivalent handled. The assessment rate of $0.16 is $0.08 higher than the 1998–99 rate. The quantity of assessable avocados for the 1999–2000 season is estimated at 900,000 containers. Thus, the $0.16 rate should provide $144,000 in assessment income. Assessment income, along with interest income and funds from the Committee's authorized reserve, should be adequate to cover budgeted expenses.

The major expenditures recommended by the Committee for the 1999–2000 year include $46,000 for salaries, $39,500 for production research, $27,000 for local and national enforcement, $10,040 for employee benefits, $8,955 for insurance and bonds, and $5,500 for travel. Budgeted expenses for these items in 1998–99 were $46,000, $41,500, $32,000, $9,778, $8,516, and $7,000, respectively.

During the 1998–99 season, the Committee voted to decrease the assessment rate to bring its operating reserve closer to one year's operating expenses. For the 1999–2000 fiscal period, the Committee voted to return to the previous rate of $0.16 to cover authorized expenses. The Committee expects to use interest income and funds from its operating reserve to cover 1999–2000 expenses. This will be necessary because assessment income is expected to total $144,000, and the Committee's budget totals $167,335.

The Committee's 1999–2000 budgeted expenditures of $167,335 include increases in employee benefits and office equipment. Prior to arriving at this budget, the Committee considered information from various sources, such as the Committee's Budget Subcommittee. Alternative expenditure levels were discussed, based upon the relative value of various research projects to the South Florida avocado industry.

The assessment rate of $0.16 per 55-pound bushel container or equivalent of assessable avocados was then determined by dividing the total recommended budget by the quantity of assessable avocados, estimated at 900,000 55-pound bushel containers or equivalents for the 1999–2000 fiscal period. This rate is expected to provide $144,000 in assessment income, which is $23,335 below budgeted expenses. The Committee found this acceptable because interest income and funds from the Committee's operating reserve would be available to make up the deficit.

A review of historical information indicates that the grower price for 1999–2000 season could range between $13.20 and $14.90 per 55-pound bushel container or equivalent of avocados. Therefore, the estimated assessment revenue for the 1999–2000 fiscal year as a percentage of total grower revenue could range between 1 and 1.2 percent.

This action increases the assessment obligation imposed on handlers. While assessments impose some additional costs on handlers, the costs are minimal and uniform on all handlers. Some of the additional costs may be passed on to producers. However, these costs are offset by the benefits derived by the operation of the marketing order. In

addition, the Committee's meeting was widely publicized throughout the Florida avocado industry and all interested persons were invited to attend the meeting and participate in Committee deliberations on all issues. Like all Committee meetings, the January 13, 1999, meeting was a public meeting and all entities, both large and small, were able to express views on this issue.

This rule imposes no additional reporting or recordkeeping requirements on either small or large Florida avocado handlers. As with all Federal marketing order programs, reports and forms are periodically reviewed to reduce information requirements and duplication by industry and public sector agencies.

The Department has not identified any relevant Federal rules that duplicate, overlap, or conflict with this rule.

A proposed rule concerning this action was published in the **Federal Register** on March 17, 1999 (64 FR 13123). Copies of the proposed rule were also mailed or sent via facsimile to all avocado handlers. Finally, the proposal was made available through the Internet by the Office of the Federal Register. A 30-day comment period ending April 16, 1999, was provided for interested persons to respond to the proposal. No comments in opposition were received.

After consideration of all relevant material presented, including the information and recommendation submitted by the Committee, the comment received, and other available information, it is hereby found that this rule, as hereinafter set forth, will tend to effectuate the declared policy of the Act.

Pursuant to 5 U.S.C. 553, it is also found and determined that good cause exists for not postponing the effective date of this rule until 30 days after publication in the **Federal Register** because the 1999–2000 fiscal year began on April 1, 1999, and the marketing order requires that the rate of assessment for each fiscal year apply to all assessable avocados handled during such period. The Committee needs to have sufficient funds to pay its expenses which are incurred on a continuous basis. Further, handlers are aware of this rule which was recommended at a public meeting. Also, a 30-day comment period was provided for in the proposed rule.

List of Subjects in 7 CFR Part 915

Avocados, Marketing agreements, Reporting and recordkeeping requirements.

For the reasons set forth in the preamble, 7 CFR part 915 is amended as follows:

PART 915—AVOCADOS GROWN IN SOUTH FLORIDA

1. The authority citation for 7 CFR part 915 continues to read as follows:

Authority: 7 U.S.C. 601–674.

2. Section 915.235 is revised to read as follows:

§ 915.235 Assessment rate.

On and after April 1, 1999, an assessment rate of $0.16 per 55 pound bushel container or equivalent is established for avocados grown in South Florida.

Dated: May 10, 1999.

Robert C. Keeney,

Deputy Administrator, Fruit and Vegetable Programs.

[FR Doc. 99–12238 Filed 5–13–99; 8:45 am]

BILLING CODE 3410–02–P

SMALL BUSINESS ADMINISTRATION

13 CFR Part 120

Business Loan Program

AGENCY: Small Business Administration (SBA).

ACTION: Final rule.

SUMMARY: This final rule implements the Small Business Reauthorization Act of 1997, enacted on December 2, 1997, with respect to SBA financing in the pilot Premier Certified Lenders Program (PCLP). The final rule extends the authority of a Certified Development Company (CDC) participating in the PCLP (Premier CDC).

DATES: This rule is effective on May 14, 1999.

FOR FURTHER INFORMATION CONTACT: LeAnn M. Oliver, 202–205–6490.

SUPPLEMENTARY INFORMATION: On May 5, 1998 (63 FR 24739), SBA published in the **Federal Register** an interim final rule in order to implement Pub. L. 105–135, the ''Small Business Reauthorization Act of 1997'' (1997 legislation), enacted on December 2, 1997, which amends Section 504 of the Small Business Investment Act of 1958 (15 U.S.C. 661–697f) (Act). SBA promulgated the regulation in interim final rule form to enable qualified CDCs to participate in the PCLP Program as soon as possible. SBA received 4 timely comments on its interim final rule. These comments addressed several issues, each of which is discussed below.

The 1997 legislation established a goal of the PCLP to have each Premier CDC process 50% of its loans made under Section 504 of the Act (''504 loans'') under PCLP procedures. Two commenters suggested that SBA make it clear in the regulation that it is a goal and not a requirement. The commenters noted that SBA stated in an internal procedural notice that a Premier CDC was ''required'' to process 50% of its 504 loans under PCLP rather than correctly stating that the 50% level is a goal. SBA agrees with the commenters but believes that the issue should be addressed in a new procedural notice and not in SBA regulations.

One commenter suggested that we substitute the term ''loan'' in place of ''financing'' in several places in the rule. The commenter noted that in certain other sections of SBA regulations the term ''financing'' or ''504 financing'' refers to the combination of the CDC loan, the Third Party Lender's loan, and the Borrower's equity injection and not just the CDC loan. In order to eliminate any possible confusion, SBA will use the term ''loan'' or ''PCLP loan'' in place of ''financing'' throughout this preamble and the final rule.

One commenter objected to SBA's requirement in the interim final rule that a letter of credit comprising any portion of a Premier CDC's loss reserve must have a term ''equal to or longer than the term of the financings it secures''. The commenter stated that: ''While I understand that the intent of this provision is to protect SBA from excessive exposure or loss, I believe that this requirement is not commercially reasonable and that it imposes an unnecessary burden on both the CDC and ultimately the borrowing small business concerns.'' The commenter suggested that SBA amend the requirement so that each letter of credit supporting a PCLP loan (1) has a term of at least one year and (2) provides for at least 90 days prior written notice to SBA and the Premier CDC if the issuer intends to decline issuing a letter of credit on substantially similar terms for another term. While SBA has considered the commenter's suggestion, SBA believes that it is inappropriate to develop and implement regulations for the program that do not fully protect SBA from undue exposure to risk of non-reimbursement resulting from a mismatch in maturity of a PCLP loan and the period a letter of credit providing protection is outstanding. SBA will continue to require that a letter of credit have a term equal to or longer than the maturity of the PCLP loan which triggered the requirement for

the Premier CDC to contribute to the loss reserve.

The comments SBA received regarding the terms of letters of credit contributed to the loss reserve made it clear to SBA that it should clarify what SBA would do if an issuer of a letter of credit did not remain ''well capitalized'' throughout the term of the letter of credit it has issued. The interim final rule stated that an issuer of a letter of credit must be well-capitalized (as that term is defined in regulations of the Federal Deposit Insurance Corporation, as amended (12 CFR 325.103)), but did not say what SBA would do if the issuer became insolvent or otherwise failed to remain well-capitalized during the term of the letter of credit. Accordingly, the final rule expressly states that SBA may require an additional loss reserve contribution by a Premier CDC if an issuer of a contributed letter of credit fails to remain well-capitalized.

The last sentence of § 120.845 (c) (1) of the interim final rule stated that ''A loss reserve irrevocable letter of credit must * * *'' and then listed conditions applicable to the letters of credit. To clarify that all letters of credit contributed to the loss reserve must be irrevocable and that the listed conditions apply to all letters of credit, SBA moved the term ''irrevocable'' from the introductory phrase of that sentence and explicitly made it condition (iii).

A commenter requested clarification regarding the requirement to replenish withdrawn loss reserve assets with contributions ''equal to or greater than the amount of the assets withdrawn.'' The PCLP regulations require Premier CDCs to contribute 1% of each PCLP loan to the loss reserve. If there is a default on a PCLP loan, the Premier CDC must pay to SBA 10% of any loss, after recoveries, incurred by SBA as a result of the default by the Premier CDC on the Debenture issued under PCLP (the Premier CDC's ''Exposure''). The commenter suggested that the proper minimum amount a Premier CDC must replenish to the loss reserve is the amount realized from the loss reserve less the 1% the Premier CDC contributed to the loss reserve when it made the PCLP loan that defaulted. SBA understands the logic underlying the request but declines to make the change because the 1997 legislation explicitly requires Premier CDCs to reimburse at least what has been withdrawn.

The 1997 legislation permitted a Premier CDC to contribute letters of credit to its loss reserve. The legislation required the letters of credit to be assigned to SBA. It did not state how the Premier CDC should do so, for either loss reserve deposits or letters of credit. Commenters generally requested more guidance with respect to the loss reserve. In order to provide such guidance, SBA decided to clarify ''in a manner acceptable to SBA'' and state expressly in the final rule how a Premier CDC will ''assign'' its deposits and letters of credit to SBA. Accordingly, the final rule states, to secure its obligations to SBA under PCLP, a Premier CDC must grant SBA a first priority perfected security interest in any segregated funds comprising any portion of a Premier CDC's loss reserve. Since the letter of credit would be used as credit support for the Premier CDC's obligations to SBA, SBA normally would be the direct beneficiary of the letter of credit, rather than the assignee of a letter of credit naming the Premier CDC as beneficiary. Therefore, SBA has decided to require ''assignment'' of any letter of credit to SBA by having the Premier CDC directly name SBA as the beneficiary of the letter of credit.

A Premier CDC commenter questioned whether this final rule would apply to Premier CDCs already participating in the PCLP pilot, and whether their original agreements with SBA and SBA regulations in effect when they first entered the PCLP pilot would apply after promulgation of this final rule. This final rule applies to all Premier CDCs. This final rule supersedes all prior regulations applicable to the PCLP pilot. If any provision in any agreement between a Premier CDC and SBA relating to the PCLP pilot is inconsistent with any provision of this final rule, the provision of this final rule will govern. If SBA develops a new form of agreement for Premier CDCs, all Premier CDCs will have to enter that agreement, which then would govern all subsequent transactions under the PCLP pilot.

Finally, a commenter wanted to know what happens to a Premier CDC's loss reserve account if SBA suspends or removes the Premier CDC from the PCLP. SBA plans to release an SBA Procedural Notice to address the issue.

Compliance With Executive Orders 12612, 12988, and 12866, the Regulatory Flexibility Act (5 U.S.C. 601–612.), and the Paperwork Reduction Act (44 U.S.C. Ch. 35)

SBA certifies that this final rule does not constitute a significant rule within the meaning of Executive Order 12866, since it is not likely to have an annual effect on the economy of $100 million or more, result in a major increase in costs or prices, or have a significant adverse effect on competition or the U.S. economy.

SBA certifies that this final rule does not have a significant economic impact on a substantial number of small entities within the meaning of the Regulatory Flexibility Act, 5 U.S.C. 601–612. Last year, SBA made approximately 4,000 504 loans. Currently there are approximately 300 CDCs, less than 25 of which are Premier CDCs. While the 1997 legislation removes the limit on the number of CDCs that can become Premier CDCs, SBA anticipates that, at most, only half of the CDCs would be affected by this rule. Thus the changes to the PCLP implementing the 1997 legislation do not constitute a significant impact on a substantial number of small businesses.

SBA certifies that this final rule does not impose any additional reporting or record-keeping requirements under the Paperwork Reduction Act, 44 U.S.C. chapter 35.

For purposes of Executive Order 12612, SBA certifies that this final rule has no federalism implications warranting preparation of a Federalism Assessment.

For purposes of Executive Order 12988, SBA certifies that this final rule is drafted, to the extent practicable, to accord with the standards set forth in section 3 of that Order.

List of Subjects in 13 CFR Part 120

Loan programs—business, Reporting and recordkeeping requirements, Small businesses.

Accordingly, pursuant to authority contained in section 5(b)(6) of the Small Business Act (15 U.S.C. 634(b)(6)), SBA amends part 120, chapter I, title 13, Code of Federal Regulations as follows:

PART 120—BUSINESS LOANS

1. The authority citation for part 120 continues to read as follows:

Authority: 15 U.S.C. 634(b)(6) and 636(a) and (h).

2. Revise § 120.845 to read as follows:

§ 120.845 Premier Certified Lenders Program (PCLP).

The SBA has established a pilot program (''Program'') to designate a number of CDCs as Premier Certified Lenders (''Premier CDCs''), and to authorize them to approve, close, service, foreclose, litigate, and liquidate 504 loans subject to SBA regulations, procedures, and policies. A Premier CDC's authority to approve loans under the Program is subject to SBA's determination that the loan and Borrower meet SBA's eligibility requirements.

(a) *PCLP Loan Approvals.* A Premier CDC notifies SBA of its approval of a

PCLP loan by submitting appropriate documentation to SBA's loan processing center. SBA will notify the Premier CDC of the SBA loan number (if it does not identify a problem with eligibility, and funds are available).

(b) *Premier CDC Exposure.* A Premier CDC must reimburse SBA for 10% of any loss (including attorney's fees and litigation costs and expenses) incurred by SBA as a result of a default by the Premier CDC on a Debenture issued under the PCLP (''Exposure'').

(c) *Loss Reserve.* A Premier CDC must establish a loss reserve to provide funds to pay its Exposure to SBA.

(1) *Assets.* (i) A Premier CDC's loss reserve must be composed of any combination of:

(A) Segregated funds on deposit in one or more federally insured depository institutions in which the Premier CDC has granted to SBA, in a manner acceptable to SBA, a first priority perfected security interest to secure the Premier CDC's obligations to SBA under the PCLP; or

(B) Irrevocable letters of credit.

(ii) SBA must be named as the beneficiary of all letters of credit. A Premier CDC's loss reserve deposits in an institution may exceed the institution's insured amount, but only if the institution is ''well-capitalized'' as defined in regulations of the Federal Deposit Insurance Corporation, as amended (12 CFR 325.103) (''well capitalized bank'').

(iii) A loss reserve letter of credit must:

(A) Be issued by a well-capitalized bank;

(B) Have a term equal to or longer than the maturity of the PCLP loan which triggered the requirement for the Premier CDC to contribute to the loss reserve;

(C) Be irrevocable;

(D) Be otherwise acceptable to the SBA;

(E) Have an issuer who remains well-capitalized throughout the term of the letter of credit, or SBA may require an additional loss reserve contribution by the contributing Premier CDC.

(2) *Contributions.* A Premier CDC's loss reserve must total 1 percent of the Debentures it issues under the PCLP Program. A Premier CDC must contribute 50 percent of the required loss reserve attributable to each PCLP loan when the Debenture it issues to fund the PCLP loan is closed, 25 percent within 1 year after the Debenture is closed, and 25 percent within 2 years after the Debenture is closed.

(3) *Reimbursement.* SBA determines a Premier CDC's Exposure on a loan and withdraws the amount necessary to cover the Exposure. If, after full use of any assets in the loss reserve, there are not enough loss reserve assets to cover a Premier CDC's Exposure, the Premier CDC must pay SBA any difference between the Exposure and the loss reserve assets withdrawn by SBA to cover the Exposure within 45 days of a demand for payment by SBA.

(4) *Replenishment.* If SBA withdraws assets from the loss reserve to cover a Premier CDC's Exposure, the Premier CDC must replace the withdrawn loss reserve assets within 30 days of the withdrawal with contributions equal to or greater than the amount of the assets withdrawn.

(5). *Withdrawal.* A Premier CDC may withdraw loss reserve assets attributable to any repaid Debenture upon written approval by SBA.

(d) *Review.* SBA will review a Premier CDC's PCLP loans annually.

(e) *Suspension and revocation.* The AA/FA may suspend or revoke a CDC's Premier designation upon written notice stating the reasons for the suspension or revocation at least 10 business days prior to the effective date of the suspension or revocation. Reasons for suspension or revocation may include loan performance unacceptable to SBA, failure to meet loss reserve or eligibility criteria, or violations of applicable statutes, regulations, or published SBA policies and procedures. A Premier CDC may appeal the suspension or revocation made under this section pursuant to the procedures set forth in part 134 of this chapter. The action of the AA/FA shall remain in effect pending resolution of the appeal.

(f) *Applications.* A CDC may obtain information concerning this pilot program from the Office of Program Development in the Office of Financial Assistance at SBA's Headquarters. A CDC may submit its application to the SBA field office in which it is most active. The SBA field office will send the application with its recommendation to the AA/FA for a final decision.

(g) *Acceptance into Program.* When determining a CDC's application, SBA will consider the CDC's ability to work with the local SBA office and the quality of past performance.

(h) *Program period.* The PCLP pilot program ends on October 1, 2000.

Dated: May 5, 1999.

Aida Alvarez,

Administrator.

[FR Doc. 99–12100 Filed 5–13–99; 8:45 am]

BILLING CODE 8025–01–P

SMALL BUSINESS ADMINISTRATION

13 CFR Part 121

Small Business Size Standards; Engineering Services, Architectural Services, Surveying, and Mapping Services

AGENCY: Small Business Administration.

ACTION: Final rule.

SUMMARY: The Small Business Administration (SBA) is establishing a size standard of $4.0 million in average annual receipts for general Engineering Services (part of Standard Industrial Classification (SIC) code 8711), Architectural Services (SIC code 8712), Surveying (SIC code 8713) and Mapping Services (part of SIC code 7389). The current size standard for the general Engineering component of SIC code 8711 and all of SIC codes 8712 and 8713 is $2.5 million. For Mapping Services under SIC code 7389, the current size standard is $3.5 million. These revisions are made to more appropriately define the size of business in these industries that SBA believes should be eligible for Federal small business assistance programs.

DATES: This rule is effective on June 14, 1999.

FOR FURTHER INFORMATION CONTACT: Robert N. Ray, Office of Size Standards, (202) 205–6618.

SUPPLEMENTARY INFORMATION: On February 3, 1998, SBA proposed a revision to the size standard for general Engineering Services (part of SIC code 8711) from $2.5 million to $7.5 million (63 FR 5480). (The other size standards applicable to Engineering Services under SIC code 8711—Military and Aerospace Equipment, Military Weapons, Marine Engineering, and Naval Architecture—were not reviewed as part of the proposed rule and are not changed by this final rule.)

The proposed rule also revised the size standard for the Architectural Services industry (SIC code 8712), from $2.5 million to $5.0 million, and for the Surveying Services industry (SIC code 8713) from $2.5 million to $3.5 million. SBA proposed no change to the $3.5 million size standard for Mapping Services categorized within Business Services, Not Elsewhere Classified (SIC code 7389). SBA proposed that Mapping Services should have the same size standard as Surveying Services since they are closely related industries. Surveying Services was proposed for adjustment to $3.5 million, the standard already applicable to Mapping Services.

SBA proposed these size standards based on its analysis of the latest

available industry data from the U.S. Bureau of the Census (the Census Bureau) and Federal contract award data from the Federal Procurement Data Center. SBA evaluated certain factors describing the economic characteristics of firms in the Engineering, Architectural, and Surveying Services industries (industry data from the Census Bureau are not available for Mapping Services under SIC code 7389). These factors were average firm size, the distribution of industry revenues by size of firm, start-up costs, and industry competition. SBA compared the characteristics of the Engineering, Architectural, and Surveying Services industries to the average characteristics of all industries with a $5.0 million size standard (the most common size standard established for nonmanufacturing industries and referred to as the ''anchor'' size standard for the nonmanufacturing industries).

Doing so enabled SBA to determine if the size standards for Architectural, General Engineering, and Surveying Services should be the same, higher, or lower than the $5 million anchor size standard. In addition, SBA reviewed the percent of total Federal contract dollars awarded to small businesses to determine if small businesses were obtaining a reasonable share of Federal contracts. For a further discussion of SBA's size standard methodology and the analyses leading to the proposed size standards see the proposed rule of February 3, 1998 (63 FR 5480).

Reason for Adopting a $4.0 Million Size Standard for These Industries

This final rule establishes a $4.0 million size standard for the each of the general Engineering, Architectural, Surveying, and Mapping Services industries. The decision to adopt this size standard rather than those proposed primarily reflects our assessment of public comments received on the proposed size standards. While industry and Federal procurement data support the size standards originally proposed, these data also indicate that $4.0 million is within a range of size standards supportable by the data.

The size standards analysis is not a mechanical process that produces a finite result. Rather, the analysis of industry and Federal procurement data provides SBA with a reasonable range of size standards to consider. Based on a review of specific industry characteristics and other information, such as public comments on a proposed size standard, SBA makes a decision on what final size standard to adopt within the range of size standards supported by the data.

As discussed in greater detail below, a significant number of comments disagree with the $7.5 million proposed size standard for General Engineering Services and the $5.0 million proposed size standard for Architectural Services. These comments express a consistent and serious concern that smaller businesses, especially those below the $2.5 million size standard, would not be competitive with businesses whose sizes are at or near the size standards which were proposed for general Engineering ($7.5 million) or Architectural Services ($5.0 million).

SBA has accepted the significance of these concerns, and adopts the lower size standard of $4.0 million to help address them, while at the same time providing an appropriate recognition of the results of inflation. Most comments separately addressing Surveying and Mapping Services support a higher standard than the proposed $3.5 million. A $4.0 million size standard helps address those views as well.

As explained below, numerous commenters strongly argue that a common size standard should be established for the four industry categories of general Engineering, Architecture, Surveying, and Mapping Services to reflect the many related activities encompassing the professional design industry. SBA agrees. The desirability of establishing the same size standard for each of these industries, provided industry-specific factors are reasonably consistent with that standard, was a strong consideration in developing this final rule.

SBA's review of industry and Federal procurement data support $4.0 million as a reasonable size standard for these industries. As discussed in the proposed rule, most of the industry factors for Architectural Services and Surveying Services support a size standard at or below SBA's anchor size standard of $5.0 million for nonmanufacturing industries.

Also, as discussed in the proposed rule, the large discrepancy between the share of Federal contract awards to small businesses in these two industries and their share of total industry revenues support an increase from the $2.5 million size standard. A size standard of $4.0 million recognizes the impact of general inflationary trends that have occurred since the current size standard was established in 1986, as well as additional cost pressures related to the expanded use of computerized applications experienced by engineering, architectural and surveying and mapping firms. Thus, we believe a size standard at $4.0 million is a reasonable alternative to the proposed size standards for Architectural Services and Surveying Services.

Although the industry data for general Engineering Services support a size standard higher than the anchor size standard, the SBA is now persuaded, in light of comments received, that Census Bureau data do not adequately consider the integrated nature and relationships among the four industry categories. For this reason, we believe the size standard appropriate for Architectural Services and Surveying Services is also appropriate for general Engineering Services.

Finally, we continue to believe the size standard for Surveying Services should also be established for Mapping Services. As discussed in the proposed rule, Surveying Services and Mapping Services are considered closely related activities. The newly developed North American Industry Classification System (NAICS) organizes firms engaged in these two activities into a single industry. SBA will be establishing size standards by NAICS industries in the near future, and believes it should treat Surveying Services and Mapping Services as one industry for size standards purposes.

Discussion of Comments

SBA received 177 timely comments on the proposed size standards. Eight comments are from associations, two from officials of Government agencies, and 167 from businesses and individuals. Several organizations submitted multiple comments. By counting multiple comments from the same organization as one, there are 130 comments from individuals and organizations that express a clear preference for a particular size standard. Just over half of the comments favor size standards similar to or higher than those proposed, and just under half favor no change to the current size standard or favor increases smaller than those proposed.

The comments raise ten major issues concerning the proposed size standards. Two of these issues strongly influenced our decision to adopt a $4.0 million size standard for each of general Engineering, Architectural, Surveying, and Mapping Services rather than the proposed size standards ($7.5 million, $5.0 million, and $3.5 million, respectively). These two issues involve the amount of increase appropriate from the existing size standards, and whether there should be a common size standard for all four industries. These two issues are dealt with first in the following discussion of the major issues raised by the commenters. Eight other issues raised by the commenters dealt with

other concerns. Below we explain our position on each.

Common Size Standard

A majority of the commenting associations, several individual businesses, and one Government agency argue for a common size standard for the general Engineering, Architectural, Surveying, and Mapping Services industries. Many of these comments consider the Architecture, Landscape Architecture, Engineering, Surveying, and Mapping Services as fully integrated and comprising the ''Professional Design Services'' industry.

This multi-disciplined nature of the industry indicates the need for a common size standard among these services. In the public sector, these commenters argued that architects, landscape architects, engineers, and surveyors often serve in similar positions of responsibility, moving between jobs requiring a design professional's expertise. In the private sector, many design professionals practice in multidisciplinary design firms. These firms integrate the skills of each profession to offer quality services to their clients.

Because of the integrated nature of multidisciplined firms, many of the comments express concern that firms could be held to three different size standards if the proposed size standards were adopted depending on the nature of a particular project. This is seen as confusing and unnecessary. Moreover, it is argued that with different size standards, contracting officers will at times inappropriately select the SIC code with the highest size standard when a procurement calls for activities from different industries.

Based on these comments, we agree that a common size standard should be established for general Engineering, Architectural, Surveying, and Mapping Services. The industries of general Engineering and Architectural Services are closely integrated and it is often difficult to distinguish whether a Federal contract should be classified under Architectural or Engineering Services. Also competition on surveying contracts frequently involves firms from both the Surveying Services and Engineering Services industries. In addition, there could be a tendency for contracting officers to select industries with higher size standards in cases where it's a ''close call'' as to which industry best describes the primary purpose of the contract. A common size standard will ensure that firms that compete in closely related industries are subject to the same size standard, and that contracting officers are not influenced by the size standard when determining the proper SIC code for a Federal procurement.

We recognize that this position departs from the approach taken in the proposed rule. Architectural, Engineering, and Surveying Services are separate industries under the SIC system for which the Census Bureau publishes data on firms primarily engaged in each industry. (Mapping Services is a very small component of SIC 7389, which includes a broad range of business services. No separate Census Bureau industry data are available for Mapping Services.) The proposed rule was the first time the SBA had both specific industry data to analyze a size standard for Architectural, Engineering, and Surveying industries and legal authority to make size standard changes.

When the $2.5 million size standard was adopted in 1986, Engineering, Architectural, and Surveying Services made up only one SIC industry. The revisions to the SIC System in 1987 created separate industries for Engineering, Architectural, and Surveying Services from that one industry. Census Bureau data for the 1987 SIC industries were not available until 1990. By that time, the Congress had imposed a prohibition against changing the size standards for these industries (see the Small Business Competitiveness Demonstration Program Act, Title VII, Public Law 100–656, 102 Stat. 3853, 3889). As explained in the proposed rule, when SBA examined these industries they exhibited significant differences. While these differences could support a separate size standard for each industry, the comments received present persuasive reasons why the SBA should continue to retain a common size standard for those three industries even though the statutory restriction has now been removed.

Furthermore, Census Bureau data corroborate the interaction that exists among firms in these three industries. For example, a review of the Census Bureau's publication ''Sources of Firm Revenues'' shows that engineering firms earned revenues for surveying work equal to about half the total revenues earned by surveying firms. Engineering firms also earned revenues for architectural services equal to about nine percent of the revenues earned by architectural firms. These data, along with the comments, indicate that a common size standard for the three industries is appropriate. As indicated above, SBA believes the Mapping Services size standard should be the same as the Surveying size standard. The end result is a common size standard for all four industries.

The size standard for Landscape Architectural Services, also considered part of the Professional Design Services industry, is $5.0 million, and was not part of the February 3, 1998, proposed rule. This industry's size standard was revised from $3.5 million in 1994, as part of SBA's inflation adjustment to receipts-based size standards. Since the public was not given a fair opportunity to comment on any adjustments to that size standard, we make no change to that size standard in this final rule.

What the Appropriate Size Standard Should Be

Most of the comments addressed the question of what size standard should be adopted for the general Engineering, Architectural, Surveying, and Mapping Services industries. The comments supporting a higher size standard generally argue that an increase is long overdue since the $2.5 million size standard, established in 1986, was not adjusted for inflation in 1994, when most other revenue-based size standards were adjusted (see 59 FR 16513).

In addition, Federal contracts have in recent years grown progressively larger and commenters argued that a higher size standard is needed to recognize the size of small firms that can perform on these newer contracts. The costs of entry into these industries have also increased over time, especially technology costs. These technology costs include computer-aided design and drafting, state-of-the-art computer hardware, new engineering and architectural software, and modern surveying equipment such as Global Positioning Software.

Several architectural firms also argued that the actual operations of an architectural firm is significantly smaller than indicated by its revenue size since the value of subcontracts, which may account for 30 percent to 40 percent of revenues, is included in calculating the gross revenues of a firm. The supporters of a higher size standard also stated that firms even exceeding the current $2.5 million are usually not strong enough to compete successfully against mid-sized and large firms. Thus, a size standard higher than $2.5 million is needed to help small firms become more competitive.

Among comments opposing the proposed size standards, the most common argument was that firms below $2.5 million in size could not compete with firms in the $5.0 million to $7.5 million size range. Firms below $2.5 million contend that they do not have the resources to compete with these businesses in terms of preparing

proposals for Federal contracts. These comments claim that contracting officers will naturally favor the larger-sized firms that are within the size standard. Larger firms have more personnel to draw on. Often these larger firms can offer higher salaries, thus drawing in professionals with strong reputations attractive to contracting officers.

Since Federal contracts for general Engineering, Architectural, Surveying, and Mapping Services are awarded using qualifications-based selection criteria, larger and more experienced firms tend to have an advantage over smaller and younger firms. Some comments also argue that in some markets (e.g., New Mexico, Wyoming, and the District of Columbia), all firms would be considered small under the proposed size standards and, therefore, there would be no meaningful small business definition.

While many of the comments made general statements on the proposed new size standards, some commenters' comments specifically discussed the proposed Surveying and Mapping Services size standard. A few wanted no change to the current $2.5 million for reasons similar to those given in opposition to the general Engineering and Architectural Services size standards. A few others support the proposed $3.5 million size standard, while most recommended size standards of between $4.0 million and $10.0 million. Those comments supporting an increase to the current size standard cite high start-up costs for surveying and mapping equipment and a concern that the Surveying and Mapping Services size standard should be similar to the general Engineering Services size standard. A mapping association, representing over 120 members, recommends we establish a separate size standard for Mapping Services of $7.5 million.

Although a majority of the comments favor the proposed size standards or higher size standards than those proposed, almost an equal number of comments recommend size standards lower than those proposed. This large difference of opinion strongly suggests that the proposed size standard increases were too high, particularly the proposed size standard of $7.5 million for General Engineering Services. We agree with many of the comments that firms below $2.5 million in size will likely have difficulty competing with firms that are $5.0 million or larger in size. A $4.0 million size standard addresses both the need for a higher size standard than the current $2.5 million while ensuring that smaller businesses in the industries are not significantly harmed by a higher size standard. We also believe the adopted size standard helps address the concern that all firms in a regional market could be considered small under the proposed size standards.

Surveying and Mapping Services Size Standard

Several comments on the Surveying and Mapping Services size standards argue that the cost of entry into photogrammetric mapping activities is higher than the cost of entry into the Architectural Services and Engineering Services industries and recommend a higher size standard than proposed. Also, a mapping association argues that a separate size standard should be established for Mapping Services given the different characteristics of mapping firms as compared to surveying firms.

Although the Census Bureau data used to evaluate the Surveying Services industry clearly supports a size standard lower than that for general Engineering Services, the data do not capture the significant number of engineering firms that are engaged in Surveying Services. Consequently, the size standard adopted for general Engineering and Architectural Services is also adopted for Surveying and Mapping Services. This does result in a higher size standard being adopted than proposed.

With respect to establishing a separate size standard for Mapping Services, SBA establishes size standards at the industry level, except for a few special categories. The size standard established for an industry reflects the characteristics of all firms engaged in all activities within that industry. In every industry, some firms engage in specialized activities that are too few in number to influence the level of the size standard. To address the concerns of these comments, we would have to establish a size standard for a sub-category under Business Services, Not Elsewhere Classified. Only when a category represents a major activity within an industry and is significantly distinct from all other industry activities do we consider a size standard below the industry level. If we were to routinely establish size standards below the industry level, it could potentially complicate size standards by creating hundreds if not thousands of additional size standards. Information provided by a mapping association does indicate that Mapping Services may be a sufficiently large activity within the industry and Federal procurement for us to examine whether a separate size standard should be established. However, that decision will be made after additional study of the industry and a change will be pursued as a separate proposed rule if it is deemed necessary.

Historic and Cultural Preservation

A few commenters focused on a special subset of activities within Engineering and Architectural Services involving historic or cultural preservation. These submitters argue that raising the size standards as proposed would devastate small businesses in this category, because, in their view, most Federal contracts would be awarded to firms they consider large businesses. These comments recommend either no change or a much smaller increase to the current size standard.

These commenters expressed concerns similar to many of the commenters arguing for no change in the size standards or lower increases than proposed. As discussed above, SBA establishes size standards at the industry level, except in a few instances where a category represents a major activity within an industry that is significantly distinct from all other activities. Based on the information provided in the comments, we do not believe historic and cultural preservation activities are a sufficiently large activity within the Engineering and Architectural industries to warrant a separate size standard. However, for reasons discussed above, a lower size standard of $4.0 million is being adopted to apply to general Engineering Services and to all Architectural Services that should adequately address the concerns raised by these commenters.

Inflation Adjustment

A few comments recommend an inflationary adjustment to the size standards on a regular basis.

The evaluation of economic characteristics of an industry is the primary basis for establishing size standards. Historically, we review size standards for inflation when a lengthy period of time has passed since the last size standard revision or when a large number of industries are under review. Because inflation affects industries differently, it's not appropriate to specify in advance under what situations an inflation adjustment will be made. Nonetheless, we do monitor the rate of inflation on a continuing basis and will pursue an inflation adjustment when it is considered necessary.

Consideration of the North American Industry Classification System

Several comments recommend that we establish size standards based on the North American Industry Classification System (NAICS) rather than the Standard Industrial Classification (SIC) System.

We will convert size standards to the NAICS system in the near future. At present, size standards are established following the SIC system. Until the NAICS system is put in place, the SIC system will be used by all Federal agencies for assigning an appropriate SIC code and size standard to Federal procurements and for classifying the primary industry of a firm. Moreover, the Engineering Services and Architectural Services industries are the same under the NAICS and SIC systems. For Surveying Services and Mapping Services, the NAICS combine these two activities into either Geophysical Surveying and Mapping Services or Surveying and Mapping (except Geophysical) Services primarily from SIC code 8713. Thus, even if we establish size standards based on the NAICS, the information currently available to evaluate these industries would lead to the same size standard.

Industry Data

Several associations argue that the data used to evaluate the industries is too old to be useful, and recommend that we withdraw the proposed rule and publish a new proposal based on better data.

Although the data we used were derived from the 1992 Economic Census, they represent the latest and best data available from the Census Bureau on the distribution of firms by size. Moreover, the data continue to be useful in assessing the structural characteristics of an industry unless there have been significant changes in an industry which fundamentally affect the operations of firms in the industry (e.g., new production methods such as the use of electric furnaces to make steel from ferrous scrap by mini-mills or the deregulation of an industry).

Absent these types of major changes, the 1992 Census Bureau data provide the SBA with reliable and objective data on the relative position of small businesses within an industry and there is no apparent reason to wait for newer data. (The Census Bureau gathers data in an Economic Census every five years. Data for the 1997 Economic Census was gathered in early 1998 and will not be available for about two years.) Our review of Federal contract awards data, however, is based on more recent data from Fiscal Years 1995 and 1996. More recent contract data for Fiscal Year 1997 reveal small business awards in the Engineering and Architectural Services industries similar to the previous two fiscal years. Small business awards to surveying firms did increase significantly in Fiscal Year 1997. However, the small business share of Federal awards is significantly below the small business share of total industry revenues, as was the case for Fiscal Years 1995 and 1996.

Size Standards Methodology

Several comments oppose our industry comparisons (using four measures of industry characteristics), especially the use of payroll/receipts ratios as a proxy for high initial capital requirements.

The evaluation of industry structure has been the primary basis for establishing size standards by SBA for many years. The use of these four measures to describe industry structure is well established within SBA. In addition, we obtained new data for 1997 on average assets per firm to improve the evaluation of startup costs. Because these data are more useful and accurate than payroll/receipts data we reworked our calculations. Our analysis using these data continues to support the size standard conclusion contained in the February 3, 1998, proposed rule and our decision in this final rule.

Small Business Contracting Opportunities

Several comments suggest that SBA should focus on other issues harming small business opportunities in Federal procurement rather than increasing size standards. These comments point out that contract bundling, the use of design-build contracting, and indefinite delivery/indefinite quantity task order contracts have adversely affected small business participation. Also, many small businesses work as subcontractors. The subcontracting program, however, is not monitored rigorously by many agencies and the comments suggest that SBA should gather better data on subcontracting efforts.

We are vigorously working on these other issues. Although these are important issues affecting the opportunities of small businesses, they generally do not affect the size standards analysis.

Calculation of Receipts

A few comments recommend that SBA count revenues in these industries on a net basis in which costs for ''pass-through'' materials and subcontracting would be excluded from the calculation of a firm's size.

We believe the gross revenues of a firm is the most equitable way to measure the size of a firm. In a few industries, the revenues earned by a firm may not accurately reflect the magnitude of its operation, as would be the case for a travel agency. We do calculate revenues differently in those cases or use number of employees as the size standard measure. Furthermore, the economic data from the Census Bureau we use to evaluate size standards is based on gross revenues for most industries. More specifically, the Census Bureau's data collected for the Architectural Services and Engineering Services industries include all revenues received by the company (including the value of subcontracts). If we were to exclude the value of subcontracts and other ''pass-through'' revenues, we would also have to establish a lower size standard to properly reflect the size of small businesses in the industry.

Dominant Field of Operation

In the proposed rule, SBA stated that no firm at or below the proposed size standards business would be dominant in its field of operations. Only a few comments addressed this issue. Of those comments, most indicated that only firms of 500 to 5,000 employees could have a controlling influence on the Engineering, Architectural Surveying, or Mapping Services industries—a size well above the proposed size standards. A few commenters did express a concern that in a local area all Architectural firms could qualify as small business under the proposed size standards. In considering whether a firm is dominant in an industry, SBA assesses whether a firm may have a controlling influence on an industry on a national basis. In consideration of the comments, and the analysis in the proposed rule, SBA believes no firms at or below the adopted size standard would be dominant in the Engineering, Architectural, Surveying or Mapping Services industries.

Compliance With Executive Orders 12612, 12988, and 12866, the Regulatory Flexibility Act (5 U.S.C. § 601–612), and the Paperwork Reduction Act (44 U.S.C. § 3501 et seq.)

The Office of Management and Budget (OMB) reviewed this rule under Executive Order 12866. OMB determined that this is not a major rule under the Congressional Review Act, 5 U.S.C. 800, *et. seq.* This rule, however, will have a significant impact on a substantial number of small entities. Immediately below, SBA sets forth a

final regulatory impact analysis of this final rule.

1. Description of Entities to Which the Rule Applies

SBA estimates that 1,460 additional firms will be considered small as a result of this rule. These firms will be eligible to seek available SBA assistance provided they meet other program requirements. Many of these firms probably had small business status in 1986 when these size standards were established at $2.5 million, but have since lost eligibility because of general price increases. Of the 1,460 additional firms gaining eligibility, 1,015 operate in Engineering Services, 340 operate in Architectural Services, 60 operate in Surveying Services, and 45 operate in Mapping Services. Firms becoming eligible for SBA assistance as a result of this rule cumulatively generate $2.3 billion in annual sales, and total sales in these industries are $77.5 billion. Of the $2.3 billion for newly eligible firms, $1.7 billion are in Engineering Services, $0.6 billion are in Architectural Services, $56.0 million are in Surveying Services, and $45.0 million in Mapping Services.

2. Potential Benefits of the Rule

We have identified two areas of benefit to businesses obtaining small business status as a result of adoption of this rule. One is eligibility for the Federal Government's small business procurement preference programs and SBA's Business Loan Program. SBA estimates that firms gaining small business status could potentially obtain Federal contracts worth $45.0 million per year under the Small Business Set-aside Program, the 8(a) Program, or unrestricted contracts. Second, we estimate $2.5 million in new loans could be made to these newly defined small businesses under SBA's 7(a) Guaranteed Loan Program, and an additional $0.7 million in loans under the Certified Development Company (504) Program. These small increases occur since most firms that obtain SBA guaranteed loans tend to have less than $2.0 million in revenues. Another benefit identified is that increased competition for many of these procurements would likely result in a lower price to the government for procurements which have been set aside, but we are unable to quantify this benefit.

3. Potential Costs of the Rule

The changes in size standards as they affect Federal procurement are not expected to add any significant costs to the Government. As a matter of policy, Federal procurements may be set aside for small business or under the 8(a) Program only if awards are expected to be made at reasonable prices. Changing a size standard would not result in any added costs associated with the 7(a) and 504 loan programs. The amount of lending authority SBA can make or guarantee is established by appropriation. The competitive effects of size standard revisions differ from those normally associated with changes in regulations. The new size standards will not impose a regulatory burden because they do not regulate or control business behavior.

Other regulations in areas such as prices, costs, profits, growth, innovation and mergers typically burden smaller firms to a greater degree than larger firms. The change to a size standard is not anticipated to have any appreciable affect on any of these factors, although small businesses or 8(a) firms much smaller than the size standard for their industries may be less successful in competing for some Federal procurement opportunities due to the presence of larger, newly defined small businesses. On the other hand, with more and larger small businesses competing for small business set-aside and 8(a) procurements, contracting agencies are likely to increase the overall number of contacting opportunities available under these programs.

4. Potential Net Benefits From the Rule

Two benefits were identified for small businesses and one for Government. Because the potential costs of this rule are minimal, the potential net benefits will be approximately equal to the total potential benefits. Most of the impact of this rule will appear in the Federal procurement area.

5. Reasons Why This Action Is Being Taken and Objectives of Rule

SBA has provided in the supplementary information a statement of the reasons why these new size standards should be established and a statement of the reasons for and objectives of this rule.

For the purpose of the Paperwork Reduction Act, 44 U.S.C. 3501, *et seq.*, SBA certifies that this rule will not impose new reporting or record keeping requirements, other than those required of SBA. For purposes of Executive Order 12612, SBA certifies that this rule does not have any federalism implications warranting the preparation of a Federalism Assessment. For purposes of Executive Order 12988, SBA certifies that this rule is drafted, to the extent practicable, in accordance with the standards set forth in section 3 of the Order.

List of Subjects in 13 CFR part 121

Government procurement, Government property, Grant programs—business. Loan programs—business. Small business.

For the reasons stated in the preamble, SBA amends 13 CFR part 121 as follows:

Part 121—SMALL BUSINESS SIZE REGULATIONS

1. The authority citation for part 121 is revised to read as follows:

Authority: 15 U.S.C. 632(a), 634(b)(6), 637(a), 644(c) and 662(5);

2. In § 121.201 in the table ''Size Standards by SIC Industry,'' under the heading DIVISION I—SERVICES, revise the entries corresponding to 7389, 8711, 8712, and 8713 to read as follows:

§ 121.201 What size standards has SBA identified by Standard Industrial Classification codes?

* * * * *

SIZE STANDARDS BY SIC INDUSTRY

SIC code and description	Size standards in number of employees or millions of dollars
* * * * * * *	
DIVISION I—SERVICES	
* * * * * * *	
7389 Business Services, N.E.C	$5.0
Except, Map Drafting Services, Mapmaking (Including Aerial) and Photogrammetric Mapping Services.	$4.0
* * * * * * *	
8711 Engineering Services	$4.0
Military and Aerospace Equipment and Military Weapons	$20.0
Contracts and Subcontracts for Engineering Services Awarded Under the National Energy Policy Act of 1992.	$20.0
Marine Engineering and Naval Architecture	$13.5
8712 Architectural Services (Other than Naval)	$4.0
8713 Surveying Services	$4.0
* * * * * * *	

Aida Alvarez,

Administrator.

[FR Doc. 99–12267 Filed 5–13–99; 8:45 am]

BILLING CODE 8025–01–P

DEPARTMENT OF HEALTH AND HUMAN SERVICES

Food and Drug Administration

21 CFR Part 178

[Docket No. 91F–0399]

Indirect Food Additives: Adjuvants, Production Aids, and Sanitizers

AGENCY: Food and Drug Administration, HHS.

ACTION: Final rule.

SUMMARY: The Food and Drug Administration (FDA) is amending the food additive regulations to provide for the safe use of 1,3-propanediamine, N,N″-1,2-ethanediylbis-, polymer with N-butyl-2,2,6,6-tetramethyl-4-piperidinamine and 2,4,6-trichloro-1,3,5-triazine as a light stabilizer for polypropylene and polyethylene complying with 21 CFR 177.1520. This action responds to a petition filed by 3-V Chemical Corp.

DATES: The regulation is effective May 14, 1999. Submit written objections and requests for a hearing by June 14, 1999.

ADDRESSES: Submit written objections to the Dockets Management Branch (HFA–305), Food and Drug Administration, 5630 Fishers Lane, rm. 1061, Rockville, MD 20852.

FOR FURTHER INFORMATION CONTACT: Julius Smith, Center for Food Safety and Applied Nutrition (HFS–215), Food and Drug Administration, 200 C St. SW., Washington, DC 20204, 202–418–3091.

SUPPLEMENTARY INFORMATION: In a notice published in the **Federal Register** of January 3, 1992 (57 FR 291), FDA announced that a petition (FAP 1B4277) had been filed by 3–V Chemical Corp., P.O. Box Drawer Y, Georgetown, SC 29442, proposing to amend § 178.2010 *Antioxidants and/or stabilizers for polymers* (21 CFR 178.2010), to provide for the safe use of 1,3-propanediamine, N,N″-1,2-ethanediylbis-, polymer with N-butyl-2,2,6,6-tetramethyl-4-piperidinamine and 2,4,6-trichloro-1,3,5-triazine as a light stabilizer for polyethylene and polypropylene complying with 21 CFR 177.1520.

FDA has evaluated the data in the petition and other relevant material. Based on this information, the agency concludes that the proposed use of the additive is safe, that the additive will have the intended technical effect, and therefore, that the regulations should be amended as set forth below.

In accordance with § 171.1(h) (21 CFR 171.1(h)), the petition and the documents that FDA considered and relied upon in reaching its decision to approve the petition are available for inspection at the Center for Food Safety and Applied Nutrition by appointment with the information contact person listed above. As provided in § 171.1(h), the agency will delete from the documents any materials that are not available for public disclosure before making the documents available for inspection.

The agency has carefully considered the potential environmental effects of this action. FDA has concluded that the action will not have a significant impact on the human environment, and that an environmental impact statement is not required. The agency's finding of no significant impact and the evidence supporting that finding, contained in an environmental assessment, may be seen in the Dockets Management Branch (address above) between 9 a.m. and 4 p.m., Monday through Friday.

This final rule contains no collection of information. Therefore, clearance by the Office of Management and Budget under the Paperwork Reduction Act of 1995 is not required.

Any person who will be adversely affected by this regulation may at any time on or before June 14, 1999, file with the Dockets Management Branch (address above) written objections thereto. Each objection shall be separately numbered, and each numbered objection shall specify with particularity the provisions of the regulation to which objection is made and the grounds for the objection. Each numbered objection on which a hearing is requested shall specifically so state. Failure to request a hearing for any particular objection shall constitute a waiver of the right to a hearing on that objection. Each numbered objection for which a hearing is requested shall include a detailed description and analysis of the specific factual information intended to be presented in support of the objection in the event that a hearing is held. Failure to include such a description and analysis for any particular objection shall constitute a waiver of the right to a hearing on the objection. Three copies of all documents shall be submitted and shall be identified with the docket number found in brackets in the heading of this document. Any objections received in response to the regulation may be seen in the Dockets Management Branch between 9 a.m. and 4 p.m., Monday through Friday.

List of Subjects in 21 CFR Part 178

Food additives, Food packaging.

Therefore, under the Federal Food, Drug, and Cosmetic Act and under authority delegated to the Commissioner of Food and Drugs and redelegated to the Director, Center for Food Safety and Applied Nutrition, 21 CFR part 178 is amended as follows:

PART 178—INDIRECT FOOD ADDITIVES: ADJUVANTS, PRODUCTION AIDS, AND SANITIZERS

1. The authority citation for 21 CFR part 178 continues to read as follows:

Authority: 21 U.S.C. 321, 342, 348, 379e.

2. Section 178.2010 is amended in the table in paragraph (b) by alphabetically adding an entry under the headings ''Substances'' and ''Limitations'' to read as follows:

§ 178.2010 Antioxidants and/or stabilizers for polymers.

* * * * *

(b) * * *

Substances	Limitations
* * *	* * *
1,3-Propanediamine, N,N″-1,2-ethanediylbis-, polymer with N-butyl-2,2,6,6-tetramethyl-4-piperidinamine and 2,4,6-trichloro-1,3,5-triazine (CAS Reg. No. 136504–96–6).	For use only: 1. At levels not to exceed 0.3 percent by weight of polypropylene complying with § 177.1520(c) of this chapter, items 1.1, 1.2, and 1.3. 2. At levels not to exceed 0.2 percent by weight of olefin polymers having a density greater than or equal to 0.94 grams per cubic centimeter and complying with § 177.1520(c) of this chapter, items 2.1, 2.2, 2.3, 3.1, and 3.2. 3. At levels not to exceed 0.3 percent by weight of olefin polymers having a density less than 0.94 grams per cubic centimeter and complying with § 177.1520(c) of this chapter, items 2.1, 2.2, 2.3, 3.1, 3.2, 3.3, 3.4, 3.5, 3.6, and 4.0. The finished polymers are to contact food only under conditions of use B through H described in Table 2 of § 176.170(c) of this chapter, and when used in contact with fatty foods of Types III, IV–A, V, VII–A, and IX as described in Table 1 of § 176.170(c) of this chapter, the finished articles are to have a volume of at least 18.9 liters (5 gallons).
* * *	* * *

Dated: May 3, 1999.

L. Robert Lake,

Director, Office of Policy, Planning and Strategic Initiatives, Center for Food Safety and Applied Nutrition.

[FR Doc. 99–12177 Filed 5–13–99; 8:45 am]

BILLING CODE 4160–01–F

DEPARTMENT OF HEALTH AND HUMAN SERVICES

Food and Drug Administration

21 CFR Part 640

[Docket No. 98N–0608]

Revision of Requirements Applicable to Albumin (Human), Plasma Protein Fraction (Human), and Immune Globulin (Human)

AGENCY: Food and Drug Administration, HHS.

ACTION: Direct final rule.

SUMMARY: The Food and Drug Administration (FDA) is amending the biologics regulations by removing, revising, or updating specific regulations applicable to blood derivative products to be more consistent with current practices and to remove unnecessary or outdated requirements. FDA is issuing these amendments directly as a final rule because the agency believes they are noncontroversial and that there is little likelihood that there will be comments opposing the rule. Elsewhere in this issue of the **Federal Register**, FDA is publishing a proposed rule under FDA's usual procedures for notice and comment in the event the agency receives any significant adverse comments. If any significant adverse comment is received sufficient to terminate the direct final rule within 30 days after the comment period ends, FDA will consider such comments on the proposed rule in developing the final rule. FDA is issuing this rule as

part of the agency's ''blood initiative'' in which FDA is reviewing and revising, when appropriate, its regulations, policies, guidance, and procedures related to blood products, including plasma derivatives.

DATES: This rule is effective September 27, 1999. Submit written comments on or before July 28, 1999. If FDA receives no significant adverse comments within the specified comment period, the agency intends to publish a document confirming the effective date of the final rule in the **Federal Register** within 30 days after the comment period on this direct final rule ends. If timely significant adverse comments are received, the agency will publish a document in the **Federal Register** withdrawing this direct final rule before its effective date.

ADDRESSES: Submit written comments on the direct final rule to the Dockets Management Branch (HFA–305), Food and Drug Administration, 5630 Fishers Lane, rm. 1061, Rockville, MD 20852.

FOR FURTHER INFORMATION CONTACT: Sharon A. Carayiannis, Center for Biologics Evaluation and Research (HFM–17), Food and Drug Administration, 1401 Rockville Pike, suite 200N, Rockville, MD 20852–1448, 301–827–6210.

SUPPLEMENTARY INFORMATION:

I. The Blood Initiative

For a variety of reasons, discussed in this document, FDA has decided to comprehensively review and, as necessary, revise its regulations, policies, guidance, and procedures related to the licensing and regulation of blood products. In the **Federal Register** of June 3, 1994 (59 FR 28821 and 59 FR 28822, respectively), FDA issued two documents, ''Review of General Biologics and Licensing Regulations'' (Docket No. 94N–0066) and ''Review of Regulations for Blood Establishments and Blood Products'' (Docket No. 94N–0080). The documents announced the agency's intent to review biologics regulations (parts 600, 601, 606, 607, 610, 640, and 660 (21 CFR 600, 601, 606, 607, 610, 640, and 660)) and requested written comments from the public. Interested persons were given until August 17, 1994, to respond to the documents. In response to requests for additional time, FDA twice extended the comment period, as announced in the **Federal Register** of August 17, 1994 (59 FR 42193), and November 14, 1995 (59 FR 56448). In addition, FDA responded to requests for a public meeting to allow for the presentation of comments regarding the agency's intent to review the biologics regulations. On January 26, 1995, FDA held a public meeting to provide an opportunity for all interested individuals to present their comments and to assist the agency in determining whether the regulations should be revised, rescinded, or continued without change. Since the time of the regulation review, FDA has implemented a number of changes to its regulations and policies applicable to the general biologics and licensing regulations, some of which applied to blood products as well as other biological products. (See, e.g., the final rules issued on May 14, 1996 (61 FR 24313); August 1, 1996 (61 FR 40153); November 6, 1996 (61 FR 57328); July 24, 1997 (62 FR 39890); and October 15, 1997 (62 FR 53536).)

Because of the importance of a safe national blood supply, the U.S. House of Representatives Committee on Government Reform and Oversight, Subcommittee on Human Resources and Intergovernmental Relations (the Subcommittee) and other groups such as the General Accounting Office (GAO), and the Institute of Medicine (IOM) have reviewed the agency's policies, practices, and regulations. Reports issued following the respective reviews contained a number of recommendations as to how FDA might improve the biologics regulations, particularly as they apply to the continued safety of blood products. The relevant reports are: (1) ''Protecting the Nation's Blood Supply From Infectious Agents: The Need for New Standards to Meet New Threats,'' by the Subcommittee (August 2, 1996); (2) ''Blood Supply: FDA Oversight and Remaining Issues of Safety,'' by GAO (February 25, 1997); (3) ''Blood Supply: Transfusion-Associated Risks,'' by GAO (February 25, 1997); and (4) ''HIV and the Blood Supply: An Analysis of Crisis Decisionmaking,'' by IOM (July 13, 1995). These reports are on file with the Dockets Management Branch (address above) under the docket number given in the heading of this document.

FDA has reviewed these reports and agrees with the majority of the recommendations contained within them. However, rather than to only respond specifically to the recommendations from the Subcommittee, GAO, IOM, and the public, FDA has convened a number of internal task forces to review a variety of issues related to the regulation of blood and blood products, including how to most appropriately update the existing regulations applicable to blood and blood products. In the future, FDA intends to issue a number of blood-related regulations that various FDA task groups currently are preparing. FDA emphasizes that for many of the changes discussed in section III of this document, additional issues related to the regulations now being amended continue to be under consideration by the agency. Further, more substantive changes may be proposed at a later date. Accordingly, any comment recommending an additional change to these regulations will not be considered to be an ''adverse comment'' unless the comment demonstrates that the change being made in the direct final rule represents a major departure from current regulations or accepted industry standards, or cannot be implemented without additional amendments to the regulations.

FDA is not describing the specific recommendations it has received and the numerous objectives of the blood initiative in this document. Future rulemaking and other notices will describe and discuss specific recommendations and regulatory objectives as they apply to each rulemaking.

II. Legal Authority

FDA is issuing this new rule under the biologics products and communicable disease provisions of the Public Health Service Act (PHS Act) (42 U.S.C. 262–264) and the drug, device, and general administrative provisions of the Federal Food, Drug, and Cosmetic Act (the act) (21 U.S.C. 321, 331, 351–353, 355, 360, 360j, 371, and 374). Under these provisions of the PHS Act and the act, FDA has the authority to issue and enforce regulations designed to ensure that biological products are safe, pure, potent, and properly labeled and to prevent the introduction, transmission, and spread of communicable disease.

III. Highlights of the Direct Final Rule

FDA is amending the biologics regulations by removing, revising, or updating specific regulations applicable to blood derivative products to be more consistent with current practices and to remove unnecessary or outdated requirements. In addition, minor editorial changes, such as correction of punctuation, are being made. FDA is issuing these amendments directly as a final rule because the agency believes they are noncontroversial and that there is little likelihood that there will be comments opposing the rule. In this section of this document, FDA is identifying each of the changes included in the direct final rule.

A. Identification of Plasma as the Source Material for Derivative Products

Sections 640.80(a), 640.90(a), and 640.100(a) state the proper name and definition for Albumin (Human), Plasma Protein Fraction (Human) and Immune Globulin (Human), respectively. With the ubiquitous use of modern anticoagulants, these products are prepared solely from human plasma. Sections 640.80(a), 640.90(a), and 640.100(a) are changed from ''a sterile solution * * * human blood'' to ''a sterile solution * * * derived from human plasma.''

Sections 640.80(b), 640.90(b), and 640.100(b) discuss source material of Albumin (Human), Plasma Protein Fraction (Human), and Immune Globulin (Human), respectively. With modern practice, these products are no longer prepared from Whole Blood, sera or human placentas. FDA is changing §§ 640.80(b), 640.90(b), and 640.100(b) to clarify and update the requirements for source material. Sections 640.80(b), 640.90(b), and 640.100(b) are changed to read ''The source material of * * * shall be plasma recovered from Whole Blood prepared as prescribed in §§ 640.1 through 640.5, or Source Plasma prepared as prescribed in §§ 640.60 through 640.76.''

B. Clarification for Microbial Contamination During Processing

Sections 640.81(c) and 640.91(c) discuss microbial contamination of source material and are amended to clarify that ''All processing steps shall be conducted in a manner to minimize the risk of contamination from microorganisms, pyrogens or other impurities.''

C. Clarification of Process for Heat Treatment

Sections 640.81(e) and 640.91(e) discuss heat treatment and are amended to clarify that the heating process shall be continuous for the time and at the temperature currently specified in the regulations. In addition, §§ 640.81(e) and 640.91(e) are corrected, by deleting a degree sign, to read ''60±0.5 °C''.

D. Clarification for Stabilizer Used in Albumin (Human) and Plasma Protein Fraction (Human)

Sections 640.81(f) and 640.91(f), stabilizer, are amended by clarifying the range for acceptable amounts of stabilizer(s) that shall be present in Albumin (Human) and Plasma Protein Fraction (Human), respectively. Consistent with the amount of stabilizer(s) currently used in these products, the regulations are amended to require either 0.08±0.016 millimole sodium caprylate, or 0.08±0.016 millimole sodium acetyltryptophanate and 0.08±0.016 millimole sodium caprylate per gram of protein. The word ''present'' has been substituted for ''added'' in §§ 640.81(f) and 640.91(f) to clarify that the regulation pertains to the amount of stabilizer in the final product. In addition, §§ 640.81(f) and 640.91(f) are amended to simplify calculations of stabilizer(s) content in Albumin (Human) and Plasma Protein Fraction (Human). Manufacturers may employ the labeled value for the protein concentration. For example, if the measured protein concentration of a lot of 5 percent Albumin (Human) is 5.15 percent, the calculations of stabilizer(s) content may use the labeled value of 5 percent. Thus, if the measured concentration of sodium caprylate is 0.35 millimole per deciliter and the measured protein concentration is 5.15 percent (i.e., 5.15 grams per deciliter), the sodium caprylate concentration may be calculated as 0.35 divided by 5, or 0.07 millimole per gram of protein.

E. Revision of Terminology

Sections 640.82(a) and 640.82(d), protein content and sodium content, respectively, are corrected by replacing ''content'' with ''concentration'' to be more precise.

Sections 640.82(c), 640.92(c), and 640.101(b) are amended by changing the term from ''hydrogen ion concentration'' to ''pH'' to reflect the more commonly used terminology.

Section 640.82(e), heme content, is replaced by potassium concentration, which describes the acceptable potassium concentration of the final product. Heme concentration is well controlled by the procedures currently used to prepare plasma, and all recent lots of Albumin (Human) have heme concentrations well below the maximum specified in the current regulation. To update the regulations, the requirement for the determination of heme content is deleted and replaced with a requirement that ''the potassium concentration of the final product shall not exceed 2 milliequivalents per liter.'' All licensed manufacturers are currently manufacturing Albumin (Human) with a potassium concentration that does not exceed 2 milliequivalents per liter. This revision is also consistent with the current requirements in § 640.92(e) for the closely related product, Plasma Protein Fraction.

Sections 640.84(a)(1) and (a)(4), 640.92(a), (d), and (e), and 640.94(a) are corrected by replacing ''content'' with ''concentration'' to be more precise. Section 640.84(b) is removed to be consistent with changes made to § 640.80(a) and (b). Section 640.84(a)(1) through (a)(4) is redesignated as § 640.84(a) through (d).

F. Correction of Spelling

Section 640.91(b)(2) and (c) are revised by correcting the spelling of ''coefficient'' and ''contamination,'' respectively.

G. Revision of Range for Protein Concentration

Section 640.92(a), protein concentration, is corrected by changing ''5.0±0.3'' to ''5.0±0.30'' to reflect the precision of the value.

H. Revision of General Requirements and Sterilization and Heating for Immune Globulin (Human)

Section 640.101(e)(3) and (e)(4) are deleted to be consistent with current practice. The use of the current attenuated strain of measles in the manufacture of measles vaccines licensed in the United States results in products that do not require the concomitant administration of measles antibodies. Moreover, the labeling for measles vaccines contains appropriate precautions regarding the effect of Immune Globulin (Human). With the availability of a highly effective vaccine, passive prophylaxis for poliomyelitis with Immune Globulin (Human), which had only minimal effectiveness, was discontinued many years ago.

Section 640.101(f), samples and protocols, is deleted to be consistent with current policy. Current policy permits manufacturers of biological products, including plasma derivatives, to request exemption from lot release by CBER. After review of the data submitted in support of such a request, the Director, CBER, may grant the request, thus decreasing the regulatory burden on the manufacturer and permitting distribution of the product as soon as the manufacturer has completed all necessary quality control procedures on a particular lot.

Section 640.102(e), sterilization and heating, is clarified by deleting ''* * * 30 to * * *.'' The effect of the regulation is unchanged by this revision.

I. Revision of Determination of Protein Composition of Final Product for Immune Globulin (Human)

Section 640.103(b) describes the protein composition of the Immune Globulin (Human) final product in terms of absolute electrophoretic mobility. This value was computed from measurements made by moving boundary electrophoresis. For at least 25 years, the instrumentation necessary for

performing moving boundary electrophoresis has not been commercially available. Accordingly, as such equipment was becoming less available, all licensed manufacturers of Immune Globulin (Human) calibrated more modern methods against moving boundary electrophoresis and amended their product license applications for Immune Globulin (Human) to provide for the use of the more modern methods. In addition, using more modern methods of manufacturing and measurement, manufacturers are now routinely making a more highly purified product. Accordingly, FDA is amending § 640.103(b) to read ''At least 96 percent of the total protein shall be immunoglobulin G (IgG), as determined by a method that has been approved for each manufacturer by the Director, Center for Biologics Evaluation and Research, Food and Drug Administration.''

J. Revision of Minimum Levels for Measles Neutralizing Antibody and Poliomyelitis Neutralizing Antibody

Section 640.104(b)(2) is revised, consistent with current accepted practice, by eliminating a specified numerical value for the measles neutralizing antibody level. This change allows more flexibility for industry and FDA, in that the regulations will no longer become outdated each time a new reference standard is used.

Section 640.104(b)(3) is revised, consistent with current accepted practice, by eliminating a specified numerical value for the poliomyelitis neutralizing antibody level. This change allows more flexibility for industry and FDA, in that the regulations will no longer become outdated each time a new reference standard is used.

K. Revision of Nomenclature for Reference Immune Globulin

Section 640.104(c)(1) and (c)(2) are corrected by deleting the word ''Serum'' to reflect the more precise nomenclature of ''Reference Immune Globulin * * *.''

IV. Rulemaking Action

In the **Federal Register** of November 21, 1997 (62 FR 62466), FDA described its procedures on when and how FDA will employ direct final rulemaking. FDA believes that this rule is appropriate for direct final rulemaking because FDA views this rule as including only noncontroversial amendments and anticipates no significant adverse comments. Consistent with FDA's procedures on direct final rulemaking, FDA is publishing elsewhere in this issue of the **Federal Register**, a companion proposed rule to amend the biologics regulations by removing, revising, and updating existing regulations to be more consistent with current accepted practices. The proposed rule serves the purpose of issuing notice under the usual notice and comment procedures in the event the direct final rule is withdrawn because of any significant adverse comment.

FDA has provided a comment period on the direct final rule of 75 days from May 14, 1999. If the agency receives any significant adverse comment, FDA intends to withdraw this direct final rule action by publication in the **Federal Register** within 30 days after the comment period ends. A significant adverse comment is defined as a comment that explains why the rule would be inappropriate, including challenges to the rule's underlying premise or approach, or would be ineffective or unacceptable without a change. In determining whether a significant adverse comment is sufficient to terminate a direct final rulemaking, FDA will consider whether the comment raises an issue serious enough to warrant a substantive response in a notice-and-comment process. Comments that are frivolous, insubstantial, or outside the scope of the rule will not be considered significant or adverse under this procedure. A comment recommending a rule change in addition to the rule would not be considered a significant adverse comment, unless the comment states why the rule would be ineffective without additional change. In addition, if a significant adverse comment applies to an amendment, paragraph, or section of this rule and that provision can be severed from the remainder of the rule, FDA may adopt as final those provisions of the rule that are not subjects of significant adverse comments.

If FDA withdraws the direct final rule, any comments received will be applied to the proposed rule and will be considered in developing a final rule using the usual Administrative Procedure Act (5 U.S.C. 553) notice-and-comment procedures. If FDA receives no significant adverse comments during the specified comment period, FDA intends to publish a confirmation document within 30 days after the comment period ends, confirming the effective date.

V. Analysis of Impacts

A. Review Under Executive Order 12866 and the Regulatory Flexibility Act and Unfunded Mandates Reform Act of 1995

FDA has examined the impact of the direct final rule under Executive Order 12866, the Regulatory Flexibility Act (5 U. S. C. 601–612), and the Unfunded Mandates Reform Act of 1995 (Pub. L. 104–4). Executive Order 12866 directs agencies to assess all costs and benefits of available regulatory alternatives and, when regulation is necessary, to select regulatory approaches that maximize net benefits (including potential economic, environmental, public health and safety, and other advantages; distributive impact; and equity). The agency believes that this direct final rule is consistent with the regulatory philosophy and principles identified in the Executive Order. This direct final rule is not a significant regulatory action as defined by the Executive Order and therefore is not subject to review under the Executive Order.

The Regulatory Flexibility Act requires agencies to analyze regulatory options that would minimize any significant impact of a rule on small business entities. Because the direct final rule amendments have no compliance costs and do not result in any new requirements, the Commissioner certifies that the direct final rule will not have a significant negative economic impact on a substantial number of small entities. Therefore, under the Regulatory Flexibility Act, no further analysis is required. This direct final rule also does not trigger the requirement for a written statement under section 202(a) of the Unfunded Mandates Reform Act of 1995 because it does not impose a mandate that results in an expenditure of $100 million or more by State, local, and tribal governments in the aggregate, or by the private sector in any 1 year.

B. Environmental Impact

The agency has determined under 21 CFR 25.31(j) that this action is of a type that does not individually or cumulatively have a significant effect on the human environment. Therefore, neither an environmental assessment nor an environmental impact statement is required.

VI. The Paperwork Reduction Act of 1995

This direct final rule contains no collections of information. Therefore, clearance by the Office of Management and Budget under the Paperwork Reduction Act of 1995 is not required.

VII. Request for Comments

Interested persons may, on or before July 28, 1999, submit to the Dockets Management Branch (address above) written comments regarding this direct final rule. Two copies of any comments are to be submitted, except that

individuals may submit one copy. Comments are to be identified with the docket number found in brackets in the heading of this document. Received comments may be seen in the office above between 9 a.m. and 4 p.m., Monday through Friday.

List of Subjects in 21 CFR Part 640

Blood, Labeling, Reporting and recordkeeping requirements.

Therefore, under the Federal Food, Drug, and Cosmetic Act and the Public Health Service Act, and under authority delegated to the Commissioner of Food and Drugs, 21 CFR part 640 is amended as follows:

PART 640—ADDITIONAL STANDARDS FOR HUMAN BLOOD AND BLOOD PRODUCTS

1. The authority citation for 21 CFR part 640 continues to read as follows:

Authority: 21 U.S.C. 321, 351, 352, 353, 355, 360, 371; 42 U.S.C. 216, 262, 263, 263a, 264.

2. Section 640.80 is amended by revising the last sentence in paragraph (a) and by revising paragraph (b) to read as follows:

§ 640.80 Albumin (Human).

(a) * * * The product is defined as a sterile solution of the albumin derived from human plasma.

(b) *Source material.* The source material of Albumin (Human) shall be plasma recovered from Whole Blood prepared as prescribed in §§ 640.1 through 640.5, or Source Plasma prepared as prescribed in §§ 640.60 through 640.76.

* * * * *

3. Section 640.81 is amended by revising the first sentence in paragraph (c) and the last sentence in paragraph (e), and by revising paragraph (f) to read as follows:

§ 640.81 Processing.

* * * * *

(c) *Microbial contamination.* All processing steps shall be conducted in a manner to minimize the risk of contamination from microorganisms, pyrogens, or other impurities. * * *

* * * * *

(e) *Heat treatment.* * * * Heat treatment shall be conducted so that the solution is heated continuously for not less than 10 or more than 11 hours at an attained temperature of 60±0.5 °C.

(f) *Stabilizer.* Either 0.08±0.016 millimole sodium caprylate, or 0.08±0.016 millimole sodium acetyltryptophanate and 0.08±0.016 millimole sodium caprylate per gram of protein shall be present as a stabilizer(s). Calculations of the stabilizer concentration may employ the labeled value for the protein concentration of the product as referred to in § 640.84(d).

* * * * *

4. Section 640.82 is amended by revising the headings in paragraphs (a) and (c), and by revising paragraphs (d) and (e) to read as follows:

§ 640.82 Tests on final product.

* * * * *

(a) *Protein concentration.* * * *

* * * * *

(c) *pH.* * * *

(d) *Sodium concentration.* The sodium concentration of the final product shall be 130 to 160 milliequivalents per liter.

(e) *Potassium concentration.* The potassium concentration of the final product shall not exceed 2 milliequivalents per liter.

* * * * *

5. Section 640.84 is amended by revising the introductory paragraph, by removing paragraph (a) introductory text and paragraph (b), by redesignating paragraphs (a)(1) through (a)(4) as paragraphs (a) through (d), respectively, and by revising newly redesignated paragraphs (a) and (d) to read as follows:

§ 640.84 Labeling.

In addition to the labeling requirements of §§ 610.60, 610.61, and 610.62 of this chapter, the container and package labels shall contain the following information:

(a) The osmotic equivalent in terms of plasma, and the sodium concentration in terms of a value or a range in milliequivalents per liter;

* * * * *

(d) The protein concentration, expressed as a 4 percent, 5 percent, 20 percent, or 25 percent solution.

6. Section 640.90 is amended by revising the last sentence in paragraph (a) and by revising paragraph (b) to read as follows:

§ 640.90 Plasma Protein Fraction (Human).

(a) * * * The product is defined as a sterile solution of protein composed of albumin and globulin, derived from human plasma.

(b) *Source material.* The source material of Plasma Protein Fraction (Human) shall be plasma recovered from Whole Blood prepared as prescribed in §§ 640.1 through 640.5, or Source Plasma prepared as prescribed in §§ 640.60 through 640.76.

* * * * *

7. Section 640.91 is amended by revising paragraphs (b)(2) and (f), and by revising the first sentence in paragraph (c) and the last sentence in paragraph (e) to read as follows:

§ 640.91 Processing.

* * * * *

(b) * * *

(2) Contains less than 5 percent protein with a sedimentation coefficient greater than 7.0 S.

(c) *Microbial contamination.* All processing steps shall be conducted in a manner to minimize the risk of contamination from microorganisms, pyrogens, or other impurities. * * *

* * * * *

(e) * * * Heat treatment shall be conducted so that the solution is heated continuously for not less than 10 or more than 11 hours at an attained temperature of 60±0.5 °C.

(f) *Stabilizer.* Either 0.08±0.016 millimole sodium caprylate, or 0.08±0.016 millimole sodium acetyltryptophanate and 0.08±0.016 millimole sodium caprylate per gram of protein shall be present as a stabilizer(s). Calculations of the stabilizer concentration may employ the labeled value 5 percent for the protein concentration of the product.

* * * * *

8. Section 640.92 is amended by revising the headings of paragraphs (a) and (c), and by revising paragraphs (d) and (e) to read as follows:

§ 640.92 Tests on final product.

* * * * *

(a) *Protein concentration.* * * *

* * * * *

(c) *pH.* * * *

(d) *Sodium concentration.* The sodium concentration of the final product shall be 130 to 160 milliequivalents per liter.

(e) *Potassium concentration.* The potassium concentration of the final product shall not exceed 2 milliequivalents per liter.

* * * * *

9. Section 640.94 is amended by revising paragraph (a) to read as follows:

§ 640.94 Labeling.

* * * * *

(a) The osmotic equivalent in terms of plasma, and the sodium concentration in terms of a value or a range in milliequivalents per liter.

* * * * *

10. Section 640.100 is amended by revising the last sentence in paragraph (a), and by revising paragraphs (b) and (c) to read as follows:

§ 640.100 Immune Globulin (Human).

(a) * * * The product is defined as a sterile solution containing antibodies derived from human plasma.

(b) *Source material.* The source material of Immune Globulin (Human) shall be plasma recovered from Whole Blood prepared as prescribed in §§ 640.1 through 640.5, or Source Plasma prepared as prescribed in §§ 640.60 through 640.76.

(c) *Additives in source material.* The source material shall contain no additives other than citrate or acid citrate dextrose anticoagulant solution, unless it is shown that the processing method yields a product free of the additive to such an extent that the safety, purity, and potency of the product will not be affected adversely.

§ 640.101 [Amended]

11. Section 640.101 *General requirements* is amended by removing the heading of paragraph (b) ''*Hydrogen ion concentration*'' and by adding in its place ''*pH*'' and by removing paragraphs (e)(3), (e)(4), and (f).

12. Section 640.102 is amended by revising the last sentence of paragraph (e) to read as follows:

640.102 Manufacture of Immune Globulin (Human).

* * * * *

(e) * * * At no time during processing shall the product be exposed to temperatures above 45 °C and after sterilization the product shall not be exposed to temperatures above 32 °C for more than 72 hours.

13. Section 640.103 is amended by revising paragraph (b) to read as follows:

§ 640.103 The final product.

* * * * *

(b) *Protein composition.* At least 96 percent of the total protein shall be immunoglobulin G (IgG), as determined by a method that has been approved for each manufacturer by the Director, Center for Biologics Evaluation and Research, Food and Drug Administration.

14. Section 640.104 is amended by revising paragraphs (b)(2), (b)(3), (c)(1), and (c)(2) to read as follows:

§ 640.104 Potency.

* * * * *

(b) * * *

(2) A measles neutralizing antibody level that, when compared with that of a reference material designated by the Center for Biologics Evaluation and Research (CBER), Food and Drug Administration, as indicated in paragraph (c) of this section, demonstrates adequate potency. The Director, CBER, shall notify manufacturers when a new reference material will be used and will advise manufacturers of an appropriate antibody level taking into account a comparison of the new reference material to the previous reference material.

(3) A poliomyelitis Type 1, Type 2, or Type 3 neutralizing antibody level that, when compared with that of a reference material designated by the Center for Biologics Evaluation and Research, Food and Drug Administration, as indicated in paragraph (c) of this section, demonstrates adequate potency. The Director, CBER, shall notify manufacturers when a new reference material will be used and will advise manufacturers of an appropriate antibody level taking into account a comparison of the new reference material to the previous reference material.

(c) * * *

(1) Reference Immune Globulin for correlation of measles antibody titers.

(2) Reference Immune Globulin for correlation of poliomyelitis antibody titers, Types 1, 2, and 3.

Dated: April 20, 1999.

Jane E. Henney,

Commissioner of Food and Drugs.

Donna E. Shalala,

Secretary of Health and Human Services.

[FR Doc. 99–11897 Filed 5–13–99; 8:45 am]

BILLING CODE 4160–01–F

PENSION BENEFIT GUARANTY CORPORATION

29 CFR Part 4044

Allocation of Assets in Single-Employer Plans; Interest Assumptions for Valuing Benefits

AGENCY: Pension Benefit Guaranty Corporation.

ACTION: Final rule.

SUMMARY: The Pension Benefit Guaranty Corporation's regulation on Allocation of Assets in Single-Employer Plans prescribes interest assumptions for valuing benefits under terminating single-employer plans. This final rule amends the regulation to adopt interest assumptions for plans with valuation dates in June 1999. Interest assumptions are also published on the PBGC's web site (http://www.pbgc.gov).

EFFECTIVE DATE: June 1, 1999.

FOR FURTHER INFORMATION CONTACT: Harold J. Ashner, Assistant General Counsel, Office of the General Counsel, Pension Benefit Guaranty Corporation, 1200 K Street, NW., Washington, DC 20005, 202–326–4024. (For TTY/TDD users, call the Federal relay service toll-free at 1–800–877–8339 and ask to be connected to 202–326–4024.)

SUPPLEMENTARY INFORMATION: The PBGC's regulation on Allocation of Assets in Single-Employer Plans (29 CFR part 4044) prescribes actuarial assumptions for valuing plan benefits of terminating single-employer plans covered by title IV of the Employee Retirement Income Security Act of 1974.

Among the actuarial assumptions prescribed in part 4044 are interest assumptions. These interest assumptions are intended to reflect current conditions in the financial and annuity markets.

Two sets of interest assumptions are prescribed, one set for the valuation of benefits to be paid as annuities and one set for the valuation of benefits to be paid as lump sums. This amendment adds to appendix B to part 4044 the annuity and lump sum interest assumptions for valuing benefits in plans with valuation dates during June 1999.

For annuity benefits, the interest assumptions will be 5.70 percent for the first 20 years following the valuation date and 5.25 percent thereafter. For benefits to be paid as lump sums, the interest assumptions to be used by the PBGC will be 4.25 percent for the period during which a benefit is in pay status and 4.00 percent during any years preceding the benefit's placement in pay status. These annuity and lump sum interest assumptions are unchanged from those in effect for May 1999.

The PBGC has determined that notice and public comment on this amendment are impracticable and contrary to the public interest. This finding is based on the need to determine and issue new interest assumptions promptly so that the assumptions can reflect, as accurately as possible, current market conditions.

Because of the need to provide immediate guidance for the valuation of benefits in plans with valuation dates during June 1999, the PBGC finds that good cause exists for making the assumptions set forth in this amendment effective less than 30 days after publication.

The PBGC has determined that this action is not a ''significant regulatory action'' under the criteria set forth in Executive Order 12866.

Because no general notice of proposed rulemaking is required for this amendment, the Regulatory Flexibility Act of 1980 does not apply. See 5 U.S.C. 601(2).

List of Subjects in 29 CFR Part 4044

Pension insurance, Pensions.

In consideration of the foregoing, 29 CFR part 4044 is amended as follows:

PART 4044—ALLOCATION OF ASSETS IN SINGLE-EMPLOYER PLANS

1. The authority citation for part 4044 continues to read as follows:

Authority: 29 U.S.C. 1301(a), 1302(b)(3), 1341, 1344, 1362.

2. In appendix B, a new entry is added to Table I, and Rate Set 68 is added to Table II, as set forth below. The introductory text of each table is republished for the convenience of the reader and remains unchanged.

Appendix B to Part 4044—Interest Rates Used to Value Annuities and Lump Sums

TABLE I.—ANNUITY VALUATIONS

[This table sets forth, for each indicated calendar month, the interest rates (denoted by i_1, i_2, * * * , and referred to generally as i_t) assumed to be in effect between specified anniversaries of a valuation date that occurs within that calendar month; those anniversaries are specified in the columns adjacent to the rates. The last listed rate is assumed to be in effect after the last listed anniversary date.]

For valuation dates occurring in the month—	The values of i_t are:					
	i_t	for t =	i_t	for t =	i_t	for t =
* * *	*		*		*	*
June 1999	.0570	1–20	.0525	>20	N/A	N/A

TABLE II.—LUMP SUM VALUATIONS

[In using this table: (1) For benefits for which the participant or beneficiary is entitled to be in pay status on the valuation date, the immediate annuity rate shall apply; (2) For benefits for which the deferral period is y years (where y is an integer and $0 < y \leq n_1$), interest rate i_1 shall apply from the valuation date for a period of y years, and thereafter the immediate annuity rate shall apply; (3) For benefits for which the deferral period is y years (where y is an integer and $n_1 < y \leq n_1 + n_2$), interest rate i_2 shall apply from the valuation date for a period of $y - n_1$ years, interest rate i_1 shall apply for the following n_1 years, and thereafter the immediate annuity rate shall apply; (4) For benefits for which the deferral period is y years (where y is an integer and $y > n_1+n_2$), interest rate i_3 shall apply from the valuation date for a period of $y - n_1 - n_2$ years, interest rate i_2 shall apply for the following n_2 years, interest rate i_1 shall apply for the following n_1 years, and thereafter the immediate annuity rate shall apply.]

Rate set	For plans with a valuation date		Immediate annuity rate (percent)	Deferred annuities (percent)				
	On or after	Before		i_1	i_2	i_3	n_1	n_2
*	*		*	*	*	*	*	*
68	06–1–99	07–1–99	4.25	4.00	4.00	4.00	7	8

Issued in Washington, DC, on this 10th day of May 1999.

David M. Strauss,

Executive Director, Pension Benefit Guaranty Corporation.

[FR Doc. 99–12175 Filed 5–13–99; 8:45 am]

BILLING CODE 7708–01–P

DEPARTMENT OF THE INTERIOR

Office of Surface Mining Reclamation and Enforcement

30 CFR Part 948

[WV–077–FOR]

West Virginia Regulatory Program

AGENCY: Office of Surface Mining Reclamation and Enforcement (OSM), Interior.

ACTION: Final rule; decision on amendment.

SUMMARY: OSM is announcing that it is not approving an amendment to the West Virginia permanent regulatory program under the Surface Mining Control and Reclamation Act of 1977 (SMCRA). The amendment would have revised the West Virginia Surface Coal Mining and Reclamation Act, and concerns fish and wildlife habitat and recreation lands as a postmining land use for mountaintop removal operations with variances from approximate original contour.

EFFECTIVE DATE: May 14, 1999.

FOR FURTHER INFORMATION CONTACT: Mr. Roger W. Calhoun, Director, Charleston Field Office, Telephone: (304) 347–7158.

SUPPLEMENTARY INFORMATION:

I. Background on the West Virginia Program
II. Submission of the Amendment
III. Director's Finding
IV. Summary and Disposition of Comments
V. Director's Decision
VI. Procedural Determinations

I. Background on the West Virginia Program

On January 21, 1981, the Secretary of the Interior conditionally approved the West Virginia program. You can find background information on the West Virginia program, including the Secretary's findings, the disposition of comments, and the conditions of the approval in the January 21, 1981, **Federal Register** (46 FR 5915–5956). You can find later actions concerning the West Virginia program and previous amendments at 30 CFR 948.10, 948.12, 948.13, 948.15, and 948.16.

II. Submission of the Amendment

By letter dated April 28, 1997 (Administrative Record Number WV–1056), the West Virginia Division of Environmental Protection (WVDEP) submitted an amendment to its approved permanent regulatory program pursuant to 30 CFR 732.17. By letter dated May 14, 1997 (Administrative Record Number WV–1057), WVDEP submitted some revisions to the original submittal. The amendment contained revisions to section 38–2–1 *et seq.* of the West Virginia Surface Mining Reclamation Regulations [Code of State Regulations (CSR)] and to section 22–3–1 *et seq.* of the West Virginia Surface Coal Mining and Reclamation Act (WVSCMRA). The amendment mainly consisted of changes to implement the

standards of the Federal Energy Policy Act of 1992, and was intended to revise the State program to be consistent with the counterpart Federal provisions.

An announcement concerning the initial amendment was published in the June 10, 1997, **Federal Register** (62 FR 31543–31546). A correction notice was published on June 23, 1997 (62 FR 33785), which clarified that the public comment period closed on July 10, 1997. No one requested an opportunity to speak at a public hearing, so none was held.

We published our approval, with certain exceptions, of the West Virginia amendment in the **Federal Register** on February 9, 1999 (64 FR 6201–6218). In that rule, we deferred a decision on an amendment to section 22–3–13(c)(3) of the WVSCMRA. Section 22–3–13(c)(3) was amended to allow the approval of permits involving a variance from restoring approximate original contour (AOC) for mountaintop removal operations when the postmining land use includes fish and wildlife habitat and recreation lands.

At the same time we were reviewing the amendment to section 22–3–13(c)(3), our Charleston Field Office conducted an evaluation and prepared a draft oversight report on portions of the West Virginia program. The draft report was focused, in part, on postmining land uses pertaining to mountaintop mining operations. We requested comments on the draft report, and at the same time we reopened the public comment period on the amendment to section 22–3–13(c)(3) because we expected that some of the comments received concerning the oversight report would address the proposed amendment to section 22–3–13(c)(3) (December 10, 1998, 63 FR 68221). The comment period on the draft oversight report closed on February 12, 1999. Therefore, we deferred a decision on section 22–3–13(c)(3) until after we could review the public comments that were received in response to the evaluation report.

III. Director's Finding

Following, according to SMCRA and the Federal regulations at 30 CFR 732.15 and 732.17, is our finding concerning the proposed amendment.

The West Virginia legislature amended section 22–3–13(c)(3) of the WVSCMRA to allow the approval of permits involving a variance from restoring approximate original contour (AOC) for mountaintop removal operations when the postmining land use includes ''fish and wildlife habitat and recreation lands.''

Mountaintop removal operations seeking a variance from the requirement to restore the affected land to AOC must comply with section 515(c)(3) of SMCRA, which states that:

> In cases where an industrial, commercial, agricultural, residential or public facility (including recreational facilities) use is proposed or the postmining use of the affected land, the regulatory authority may grant a permit for a surface mining operation of the nature described in subsection (c)(2) [concerning mountaintop removal operations] where—
>
> (A) After consultation with the appropriate land use planning agencies, if any, the proposed postmining land use is deemed to constitute an equal or better economic or public use of the affected land, as compared with premining use;
>
> (B) The applicant presents specific plans for the proposed postmining land use and appropriate assurances that such use will be—
>
> (i) Compatible with adjacent land uses;
>
> (ii) Obtainable according to data regarding expected need and market;
>
> (iii) Assured of investment in necessary public facilities;
>
> (iv) Supported by commitments from public agencies where appropriate;
>
> (v) Practicable with respect to private financial capability for completion of the proposed use;
>
> (vi) Planned pursuant to a schedule attached to the reclamation plan so as to integrate the mining operation and reclamation with the postmining land use; and
>
> (vii) Designed by a registered engineer in conformance with professional standards established to assure the stability, drainage, and configuration necessary for the intended use of the site.

The Federal regulations at 30 CFR 785.14(c)(1) concerning mountaintop removal mining mirror the SMCRA provisions at section 515(c)(3) that are quoted above. Neither of these Federal provisions authorizes ''fish and wildlife habitat and recreation lands'' as a postmining land use that qualifies for the AOC variance needed by mountaintop removal operations.

The land use category of ''fish and wildlife habitat'' is defined at 30 CFR 701.5 under the definition of ''land use'' as land ''dedicated wholly or partially to the production, protection or management of species of fish or wildlife.'' A variance from achieving AOC is simply not needed for the management of species of fish or wildlife, because fish and wildlife habitats do not require flat or rolling terrain, which is created by mountaintop removal operations, in order to be successful. (For an analogous discussion that concludes that silviculture is not a postmining land use authorized for mountaintop removal operations requesting an AOC variance, *see* the preamble to the March 13, 1979 **Federal Register** document, 44 FR 14901, 15288–15289). Therefore, the land use of ''fish and wildlife habitat'' is not authorized as a postmining land use that qualifies for an AOC variance for mountaintop removal operations.

If we interpret the phrase ''fish and wildlife and recreation lands'' in accordance with its plain meaning, we conclude that it constitutes one postmining land use, with both ''fish and wildlife'' and ''recreation lands'' components. Given this construction, the entire phrase should be disapproved, because operations proposing fish and wildlife postmining land uses do not qualify for AOC variances under SMCRA. However, one could conceivably construe the phrase to create two separate, additional postmining land uses which would qualify for the AOC variance.

OSM has reason to believe that the State intends this term to include two separate uses. This interpretation is based on the fact that the State further defines ''fish and wildlife habitat and recreation lands'' at CSR 38–2–7.2.k as ''wetlands, fish and wildlife habitat, and areas managed primarily for fish and wildlife *or* recreation'' (emphasis added). Therefore, we have chosen to discuss the ''recreation lands'' use separately, in order to ascertain whether we could reach a different decision. For the reasons discussed below, however, we find we must still disapprove the proposed amendment in its entirety.

The land use category of ''recreation lands'' that is proposed by West Virginia is not specifically defined in the Federal regulations. However, the land use category of ''recreation'' is defined at 30 CFR 701.5 under the definition of ''land use.'' ''Recreation'' land use means ''land used for public or private leisure-time activities, including developed recreation facilities such as parks, camps, and amusement areas, as well as areas for less intensive uses such as hiking, canoeing, and other undeveloped recreational uses.'' SMCRA at section 515(c)(3) and the implementing Federal regulations at 30 CFR 785.14(c)(1) specifically authorize ''public facilities (including recreation facilities)'' as a postmining land use which qualifies for the variance from AOC for mountaintop removal mining. The term ''public facilities (including recreation facilities)'' bears some resemblance to, but is not the same as, the Federal regulatory definition of the ''recreation'' land use. To qualify for the variance, the recreation facilities must be ''developed,'' and must also be ''public'' in nature. Specifically, SMCRA's use of the term ''public

facility (including recreational facilities) use'at section 515(c)(3) means that, unlike the definition of ''recreation'' at 30 CFR 701.5 under ''land use,'' the use is limited to applications of public use. That is, a purely private postmining land use does not qualify under SMCRA for a mountaintop removal AOC variance.

In addition, SMCRA at section 515(c)(3) specifically uses the term ''facilities.'' The term ''facilities'' means that various structures that support the public or recreational use of the land are required to be developed. For example, the postmining land use of ''public facility (including recreational facilities)'' requires a structure or development of some sort created by man that the public is able to use. A ''public facility'' might include developments such as governmental buildings, prisons, schools, reservoirs, or airports. ''Recreational facilities'' might include developed recreational facilities such as parks, camps, and amusement areas, as well as areas developed for uses such as hiking, canoeing, and other less intensive recreational uses. The designs of some of these recreational facilities, including the less intensive recreational facilities (for example, hiking and camping recreational facilities), could incorporate fish and wildlife habitat as an integral component of the recreation facility. However, even the less intensive recreation facilities would require structures or developments to support the public uses. For example, less intensive recreation facilities such as those for hiking and camping may require access roads, parking lots, rest rooms, developed trails, boat ramps, camping shelters, etc.

The term ''recreation lands'' proposed by the State may not be inconsistent with the Federal term ''public facility (including recreational facilities) use'' as discussed above. However, the West Virginia program at section 22–3–13(c)(3) of the WVSCMRA currently authorizes a postmining land use of ''public use'' as a postmining land use for an AOC variance for mountaintop removal operations. The State's authorization of a ''public use'' postmining land use is West Virginia's counterpart to the ''public facility (including recreational facilities)'' land use which qualifies for an AOC variance pursuant to section 515(c)(3) of SMCRA. That is, the State term ''public use'' already authorizes a postmining land use of ''public facility (including recreational facilities)'' for an AOC variance for mountaintop removal operations. Therefore, the proposed postmining land use of ''recreation lands'' is not necessary, as the currently approved term ''public use'' already authorizes ''public facility (including recreational facilities).'' When OSM initially approved West Virginia's term ''public use'' (46 FR 5915, January 21, 1981) it did so without discussion. If OSM had intended its approval of the term ''public use'' to mean something other than the Federal term ''public facility (including recreation facilities)'' it would have discussed its rationale in the preamble. Since such a discussion is lacking, we conclude that when it approved West Virginia's term ''public use,'' OSM interpreted that term to be equivalent to the Federal term ''public facility (including recreation facilities).'' However, we also recognize that the difference in terms has led to confusion concerning the meaning of the State's term ''public use.'' Therefore, we are requiring that the term ''public use'' at section 22–3–13(c)(3) be amended to include the term ''facility'' and to further clarify that the State term will be interpreted the same as ''public facility (including recreation facilities) use'' at section 515(c)(3).

Based on the discussion above, we are not approving the proposed language ''or fish and wildlife habitat and recreation lands.'' The addition of the term ''fish and wildlife habitat'' would render the West Virginia program less stringent than SMCRA, which does not authorize ''fish and wildlife habitat'' as a postmining land use that qualifies for an AOC variance for mountaintop removal operations. The term ''recreation lands'' need not be added to the West Virginia program, because the currently approved ''public use'' variance corresponds to the Federal authorization of ''public facility (including recreational facilities) use.'' Moreover, some of the public facilities or recreational facilities which could be approved under section 22–3–13(c)(3) as ''public uses'' could incorporate ''fish and wildlife habitat'' as an integral component of the design of the public or recreation facility. Therefore, OSM is requiring that section 22–3–13(c)(3) be amended to remove the phrase ''or fish and wildlife habitat and recreation lands.'' Finally, as stated above, we are requiring that the term ''public use'' at section 22–3–13(c)(3) be amended to include the term ''facility'' and further clarify that the term will be interpreted the same as ''public facility (including recreation facilities) use'' at SMCRA section 515(c)(3).

IV. Summary and Disposition of Comments

Federal Agency Comments

According to 30 CFR 732.17(h)(11)(i), we solicited comments on the proposed amendment from various Federal agencies with an actual or potential interest in the West Virginia program. Except for the U.S. Environmental Protection Agency as discussed below, no other Federal agencies commented on the amendment relating to ''fish and wildlife habitat and recreation lands.''

Public Comments

We solicited public comments on several different occasions. The following is a summary and disposition of the public comments received on the amendment.

1. General Comments Against Approval

Comments: Several commenters made general statements against approval of the proposed amendment. One commenter suggested that we defer our decision concerning the proposed postmining land use until after the Environmental Protection Agency (EPA) completes its environmental impact statement on mountaintop removal operations. The commenter also urged OSM to not allow it as an approved postmining land use during the interim period.

One commenter said that fish and wildlife habitat has several faults. On the plus side, however, allowing the creation of wetlands on mined areas was a step in a positive direction. But, the commenter asserted, fish and wildlife habitat has been used which included non native, invasive plants.

One commenter stated that fish and wildlife postmining land use should not be approved, because the language and legislative history of SMCRA demonstrate that Congress intended to restrict permissible postmining land uses to socially beneficial and developed uses, not passive and undeveloped uses such as ''fish and wildlife habitat and recreation lands.'' The commenter asserted that the ''fish and wildlife habitat and recreation lands'' use is not socially beneficial; it does not require any development; it does not require any public facilities; and it is not a use which otherwise might not be available.

Further, one of these commenters did not support West Virginia's contention, via the amendment, that ''fish and wildlife habitat and recreation lands'' is an appropriate postmining land use.

Another commenter stated that allowance of ill-defined land uses such as ''fish and wildlife habitat,'' rather

than conformance to the specific requirements of the law, results in improper off-site disposal as a matter of course, rather than as an exception to the rule of on-bench retention.

Response: In response to these comments, and for the reasons discussed in the Finding above, we have not approved this amendment.

2. Fish and Wildlife Habitat

Comments: A commenter supported the amendment and stated that fish and wildlife habitat clearly should qualify as a recreational use and consequently, a public use. From an environmental standpoint, the commenter stated, you couldn't have a better postmining land use for the environment. Though not one of the four listed postmining land uses in SMCRA, the commenter noted, there clearly isn't any prohibition of this as a valid postmining land use, nor are there any environmentally sound arguments for precluding it as a postmining land use. The commenter further stated that the State of Kentucky has had a postmining land use of ''fish and wildlife'' as part of its regulatory program since 1991.

Response: In response, we disagree with the statement that there clearly is not any prohibition of ''fish and wildlife habitat'' as a valid postmining land use. The fact that ''fish and wildlife habitat'' is not listed at SMCRA section 515(c)(3) as an allowable postmining land use for mountaintop-removal operations is a clear prohibition of ''fish and wildlife habitat'' as a postmining land use under SMCRA. While we have no doubt about the value of ''fish and wildlife habitat'' in the natural environment, and as a postmining land use in a mining situation where the site is to be restored to approximate original contour, ''fish and wildlife habitat'' is not an approvable postmining land use for mountaintop removal operations with variances from AOC under SMCRA section 515(c)(3). Finally, Kentucky has not had an approved postmining land use of ''fish and wildlife habitat'' as part of its regulatory program since 1991. Rather, the Kentucky program was authorizing ''fish and wildlife habitat'' as a postmining land use for mountaintop-removal operations with AOC variances under an internal memorandum dated May 29, 1991, that was never approved by OSM. The State no longer implements that memorandum.

3. Public Use Versus Public Facility Use

Comments: A few commenters noted that the West Virginia program authorizes ''public use'' as a valid postmining land use for an AOC variance for mountaintop removal operations, whereas SMCRA authorizes ''public facility use.'' One commenter said that the West Virginia program must be brought into conformity with SMCRA. Another commenter said that ''any public use'' is too broad a definition and provides a loophole for mining companies. Still another commenter stated that the rational response would be to clarify this matter through a policy statement, with a provision to allow maximum input from stakeholders.

A commenter asserted that while the word ''facility'' may mean that some type of structure or appurtenance must accompany the public use, this is not the only permissible interpretation of the term ''public facility.'' For example, the commenter asserted, land that is reclaimed to support the propagation and preservation of wildlife, or leisure activities such as hiking, hunting or camping, are public facilities. Similarly, dedicated open space used as a park is a public facility even in the absence of buildings or other structures. The commenter also stated that the ''public'character of the land use should not be interpreted to be unduly narrow. The commenter stated that OSM has previously addressed the question of the public nature of a land use for purposes of SMCRA's land use requirements. The commenter stated that OSM declined to adopt a regulatory definition of the term ''public use'' because public use ''overlaps more than one of the existing land use categories'' 48 FR 39893, September 1, 1983. In that notice, OSM stated that a use is public ''if it involves benefit, utility, or advantage to the public generally or any part of the public, as distinguished from benefitting an individual or a few specific individuals.'' The commenter stated that land that is reclaimed to support the propagation and preservation of wildlife is a public facility. Finally, the commenter stated that whether or not these uses would require buildings or other appurtenances is a question that would be evaluated in the context of the specific plans for the proposed postmining use.

Response: In response, the one commenter is saying that all land uses have a public utility and that, for example, land that is reclaimed to support the propagation and preservation of wildlife is a public facility. We believe that such an interpretation only serves to render meaningless the term ''public facility (including recreational facilities) use.'' Although the commenter believes that the public character of the land use should not be interpreted too narrowly, we believe that to be meaningful, the term ''public facility (including recreational facilities) use'' must not be interpreted too broadly. Were it otherwise, instead of stating ''public facility (including recreational facilities) use'' SMCRA could merely state ''public use,'' or even ''fish and wildlife habitat use.'' Instead, SMCRA excludes ''fish and wildlife habitat'' from the list of approvable postmining land uses at section 515(c)(3), and it specifically provides for ''public facility (including recreational facilities) use.''

SMCRA uses the term ''facility'' rather than the more generic term ''public use'' in the approvable postmining land use of ''public facility (including recreational facilities) use.'' We interpret the term ''public facility (including recreational facilities) use'' to require some sort of structure or man-made development that actually supports or facilitates the public use. Such facilities could include community centers, buildings and runways as at an airport, amphitheatres or parking lots, rest rooms, developed hiking trails, boat ramps, camping shelters, or shooting ranges, etc. at less intensive public recreational facilities.

Finally, we agree that the specific plans for each proposed postmining land use must be assessed on a case-by-case basis. However, as stated above, we believe that SMCRA requires that the various structures or developments discussed above be required for a postmining land use of ''public facility (including recreational facilities).''

Comment: Another commenter contends that the term ''public use'' in the West Virginia program was approved by OSM and is not limited to ''public recreation facilities.'' The commenter also asserted that because the State's regulations require that proposed postmining land uses of fish and wildlife habitat and recreation lands include a planting plan prepared or approved by a state mining biologist, whose job it is to encourage the propagation of ''desirable'' species, these plans necessarily confer public benefit.

Response: In response, we are aware of the confusion that exists concerning the interpretation of West Virginia's term ''public use'' and the term ''public facility (including recreational facilities)'' in SMCRA at section 515(c)(3). As a consequence, and as discussed in the Finding above, we are requiring that the State further amend its program to clarify that its term ''public use'' means the same as the term ''public facility (including recreational facilities)'' at SMCRA section 515(c)(3). To be no less stringent

than SMCRA at section 515(c)(3), the West Virginia term ''public use'' at section 22–3–13(c)(3) of WVSCMRA must be equivalent to the Federal term ''public facility (including recreational facilities) use.''

4. Fish and Wildlife Habitat and Public Use

Comments: One commenter supported the amendment and said that fish and wildlife habitat is a recreational use and consequently a public use. The commenter stated that ''public use'' as a postmining land use has been part of the approved West Virginia program since 1981. If public access is available to the site, the commenter asserted, then it would appear that the conditions of this land use category have been met.

Another commenter agrees and stated that OSM issued a Federal permit in West Virginia effective August 23, 1993, that granted an AOC variance for ''fish and wildlife habitat.'' According to the commenter, the variance was apparently approved based on the rationale that the postmining fish and wildlife habitat development constituted a public use.

Response: In response, we disagree with the commenters that assert that ''fish and wildlife habitat'' is a recreational use and consequently a public use. The ''fish and wildlife habitat'' postmining land use is defined at 30 CFR 701.5 under the definition of ''land use.'' It is defined as land dedicated wholly or partially, to the production, protection, or management of species of fish or wildlife. Sites that are not open to the public at all can meet this definition. Therefore, ''fish and wildlife habitat'' by itself cannot be considered a public use.

The second commenter is referring to Permit Number OC–1 (subsequently converted to OC–2). OSM approved a postmining land use of ''public use'' for this permit. The permit was for a 20-acre surface mining operation at R.D. Bailey Lake in Mingo County. R.D. Bailey Lake is managed by the U.S. Army Corps of Engineers (COE). The COE specified that the reclaimed surface, especially the side facing the lake, dam and visitor center, should have some minor degree of slope to make it appear natural in relation to the general topography of the ridge areas. This was specified so that as viewed from the nearby public use areas of the lake the reclaimed area would be aesthetically pleasing. The COE agreed that at least three acres of the reclaimed site would be for water fowl habitat, which would consist of two acres of flat surface and a one-acre depression ranging from one to two feet in depth. All surface areas accessible by mowing equipment had to be graded and free of rock, boulders and other debris to facilitate mowing and other wildlife management activities. OSM agrees that fish and wildlife habitat was a component of the postmining land use. However, and more importantly, because the site was accessible to the public, managed by a governmental agency, and developed for public use, OSM was able to approve the permit with an AOC variance in accordance with the approved State program.

Comment: Another commenter disagrees with the proposed amendment, and stated that the State has not demonstrated that a proposed postmining land use of ''fish and wildlife habitat and recreation lands'' is consistent with SMCRA. The commenter asserted that the State's justification of the proposed amendment, which states that ''[b]ecause of the feral nature of wildlife the proposed program amendment conforms with CFR 824.11(a)(3) by providing enhanced recreational benefits in the form of additional wildlife for public hunting and observation,'' has no meaning. The commenter said that a public use is one that is available to the public permanently. The commenter stated that Congress did not intend to allow passive ''recreational areas'' which are maintained and controlled by private companies, instead of public authorities. Hence, the public would have to own the land for it to qualify as a public use. The commenter also stated that a public use must allow unimpeded public access, must be a higher and better use than the pre-mining use, and the permit application must demonstrate that there is a need for the use and that financing is available for public projects such as golf courses, public parks, or swimming pools with public facilities. The public facilities, the commenter asserted, would also have to be owned by the public; otherwise the public nature of the enterprise could be revoked at any time after mining is complete.

Response: In response, we agree with the commenter that ''fish and wildlife habitat'' is not, by itself, a public use. However, we disagree with the commenter's assertion that to qualify as a public facility the facility must be owned by the public. SMCRA section 515(c)(3) does not require public ownership to qualify as a ''public facility (including recreational facilities)'' postmining land use. Neither does SMCRA section 515(c)(3) specify that an approved postmining land use be continued permanently, or that the use be higher and better than the premining use. Rather, section 515(c)(3)(A) requires that the proposed postmining land use be an equal or better economic or public use, as compared with the premining use. SMCRA section 515(c)(3) does, however, require that the reclaimed site be capable of supporting the postmining land use in accordance with the requirements at subsection 515(c)(3). SMCRA also specifies minimum requirements such as consultation with land use planning agencies, and specific plans and assurances that the proposed postmining land use will be compatible with adjacent land uses; obtainable according to data regarding expected need and market; assured of investment in necessary public facilities; supported by commitments from public agencies where appropriate; practicable with respect to private financial capability for completion of the proposed use; and planned pursuant to a schedule attached to the reclamation plan so as to integrate the mining operation and reclamation with the postmining land use.

Comment: One commenter noted that SMCRA at section 515(c)(3) does not specifically authorize ''fish and wildlife habitat'' as a postmining land use for an AOC variance for mountaintop-removal operations. However, the commenter asserted, this is no impediment to those land uses falling within one of the general categories of land uses listed in the statute. This view is supported by another commenter who said that there is nothing which precludes a ''fish and wildlife habitat and recreation'' postmining land use from serving as the basis of an AOC variance ''so long as it can be viewed as a subset of one of the list of land uses set out in W.Va. Code § 22–3–13(c)(3).''

Moreover, the commenter said, the list of uses set forth in the Federal rules is not exhaustive or exclusive, but simply a ''minimum list that would meet the requirements of the Act.'' 44 FR at 14933.

Response: In response, and as discussed above in the Finding, the design of a ''public facility (including recreational facilities) use'' could include areas that are designed as fish and wildlife habitat. This is not to say that ''fish and wildlife habitat'' is the primary postmining land use. Rather, fish and wildlife habitat may be a component of the design of a ''public facility (including recreational facilities) use.'' And, it is the ''public facility (including recreational facilities) use'' that must be the focus of the applicant's demonstration, and the regulatory authority's determination that the proposed postmining land use meets the requirements for an AOC variance.

Comment: The commenter further stated that the specific land uses of ''fish and wildlife habitat and recreation lands'' comfortably fit within the general land use category of public facility/public use as set forth in both section 515(c)(3) and 515(e)(2) of SMCRA.

Response: In response, we disagree with this comment. As discussed above in the Finding, the proposed postmining land use of ''fish and wildlife habitat and recreation lands'' is not approvable under SMCRA section 515(c)(3). ''Fish and wildlife habitat'' is not a listed postmining land use at section 515(c)(3) of SMCRA and, therefore, cannot be approved. In addition, the State's proposed term ''recreation lands'' is not approved because, to the extent it refers to public recreational facilities, it is redundant with the term ''public use'' that is already part of the approved West Virginia program. To the extent that it creates a more expansive category, which would include undeveloped recreational areas or purely private developed recreational facilities, it is inconsistent with section 515(c)(3) of SMCRA. As discussed in the Finding, we have concluded that when OSM approved the term ''public use'' in the State program, it did so with the interpretation that the term ''public use'' is no less stringent than the Federal standard, which allows only a ''public facility (including recreational facilities) use.''

Comment: The commenter also asserted that there are public benefits from fish and wildlife habitat regardless of whether general access is provided.

Response: In response, and as discussed in the Finding above, ''fish and wildlife habitat'' is not an approvable postmining land use for mountaintop-removal operations with AOC variances. We believe that the approvable postmining land use of ''public facility (including recreation facility) use'' clearly contains a ''public'' component, and a requirement that the public's use of the land be facilitated. We believe that the term ''facility'' requires the inclusion of a structure or other man-made developments such as parking lots, rest rooms, or shelters that would facilitate the use of the land by the public. Some public facilities, such as water treatment plants, transmission lines, and solid waste disposal facilities that directly benefit the public, may not allow public access. However, recreational areas must be available for public access in order for the public to be able to use and benefit from them, and that access should be facilitated by the inclusion of necessary structures or developments.

5. Other Comments

Comment: One commenter suggested that fish and wildlife habitat should be accepted as valid. The commenter said this would be especially beneficial if that use could be used in conjunction with a postmining use of reservation for future economic development. In such a manner, the commenter said, the land could be reclaimed for wildlife habitat and used as such indefinitely or until such time as a need develops for some other qualified project.

Response: In response, and as noted in the Finding above, fish and wildlife habitat cannot be approved as a postmining land use under section 515(c)(3) of SMCRA. While SMCRA does not specify exactly when a postmining must actually be implemented, it does specify that the land must be capable of supporting the postmining land use, and also specifies the minimum criteria which must be met to qualify for a variance. SMCRA section 515(c)(3)(vi) provides that the proposed use must be planned pursuant to a schedule attached to the reclamation plan so as to integrate the mining operation and reclamation with the postmining land use. In addition, the Federal regulations at 30 CFR 785.14(c)(1)(ii), governing AOC variances for mountaintop-removal operations, specify that compliance with the Federal regulations at 30 CFR 816/817.133(a) through (c), concerning postmining land use, is required. 30 CFR 816/817.133(c)(3)(iii) provides that the proposed postmining land use will not involve unreasonable delay in implementation.

Comment: A commenter stated that SMCRA does not require the land to be actually put to the use proposed, but only that it be capable of supporting the postmining land use proposed. As the Supreme Court held, ''[t]he Act imposes no restrictions on post reclamation use of mined lands.'' *Hodel* v. *Indiana,* 452 U.S. 314, 330 n. 18 (1981).

Response: In response, we note that SMCRA at section 515(c)(2) specifies that the applicant for an AOC variance for mountaintop removal operations must create a postmining land that is ''capable of supporting postmining uses in accordance with the requirements of this subsection.'' However, SMCRA at section 515(c)(3) also provides that an applicant must present specific plans and appropriate assurances that the proposed postmining land use will be compatible with adjacent land uses; obtainable according to data regarding expected need and market; assured of investment in necessary public facilities; supported by commitments from public agencies where appropriate; practicable with respect to private financial capability for completion of the proposed use; and planned pursuant to a schedule attached to the reclamation plan so as to integrate the mining operation and reclamation with the postmining land use. These specific plans and assurances should be sufficiently detailed to allow the regulatory authority to determine if there is a reasonable likelihood for achievement of the proposed postmining land use, and the use will not be impractical or unreasonable, or involve unreasonable delay in implementation.

Comment: A commenter also stated, in comments directed against approval of the amendment, that if the proposed amendment is approved, regulators must approve postmining land use of any mountaintop removal permit application that proposes to flatten mountains and fill streams as long as that application proposes a ''fish and wildlife habitat and recreation lands'' variance.

Response: In response, and as explained in the Finding above, we are not approving the proposed amendment. In addition, we disagree that the regulatory authority must approve a variance from the requirements of AOC just because a permittee proposes one of the approvable postmining land uses listed at section 515(c)(3). SMCRA at section 515(c)(3) specifies that a regulatory authority ''may'' approve such a request if it finds that the permittee also demonstrates compliance with all the other criteria specified at section 515(c)(3). If all of the requirements of section 515(c)(3) of SMCRA are not met, the regulatory authority must reject the variance request.

Environmental Protection Agency (EPA)

According to 30 CFR 732.17(h)(11)(ii), OSM is required to obtain the written concurrence of the EPA with respect to those provisions of the proposed program amendment that relate to air or water quality standards promulgated under the authority of the Clean Water Act (33 U.S.C. 1251 *et seq.*) or the Clean Air Act (42 U.S.C. 7401 *et seq.*). We requested EPA concurrence on June 6, 1997 (Administrative Record Number WV–1059) and again on March 19, 1999 (Administrative Record Number WV–1118). In accordance with 30 CFR 732.17(h)(11)(i), we also solicited comments from the EPA on the proposed amendment on June 5, 1997. (Administrative Record Number WV–1060)

EPA responded to our June 5 and 6, 1997, requests for comments and concurrence by letter dated October 23, 1998 (Administrative Record Number WV–1108). EPA expressed concerns about the proposed provision at section 22–3–13(c)(3) of the WVSCMRA that would allow an exemption for mountaintop removal operations from restoring mined land to its approximate original contour (AOC) if the post-mining land use is fish and wildlife habitat and recreation lands. EPA stated that the proposed revision would allow excess overburden to be disposed in valley fills rather than on top of the mined area to achieve AOC. A use designation as fish and wildlife habitat and recreation lands would not appear to be necessary if the goal was just to provide wildlife habitat and recreation land, rather than avoid the expense of placing overburden back on top of mined areas. It is very likely, EPA stated, that wildlife habitat areas would occur naturally on post-mining lands, including areas restored to the approximate original contour, as a result of appropriate reclamation without any special use designation. In addition, it appears that the proposed designation as wildlife habitat and recreation lands is not intended for lands to be used by the public since an exemption for ''public use'' is already in the State statute. EPA said that its concern is that disposal of excess overburden in valley fills may harm aquatic life in headwater streams and possibly downstream reaches.

EPA noted OSM's intention to defer action on proposed revisions to section 22–3–13(c)(3) of the WVSCMRA regarding an exemption to approximate original contour for mountaintop removal operations until a later date, and that the comment period would be reopened on this provision. With this understanding, the EPA concurred with the other proposed WVDEP revisions under the condition that the EPA be given an opportunity to concur or not concur with the proposed amendment to section 22–3–13(c)(3) of the WVSCMRA.

By letter dated April 2, 1999 (Administrative Record Number WV–1120), EPA responded to OSM's request for concurrence dated March 19, 1999 (Administrative Record Number WV–1118), and stated that it does not concur with the proposed revision at section 22–3–13(c)(3). EPA stated that it is withholding concurrence because the amendment would result in degradation of stream quality and aquatic life and violate the Anti-Degradation Policy of the West Virginia Water Quality Standards (Section 46–1–4 of the Legislative Rules of the Environmental Quality Board). According to EPA, compliance with Water Quality Standards is a requirement of the Clean Water Act.

In its letter, the EPA stated that the proposed revision for exempting the restoration of mined lands to approximate original contour would result in an increase of excess spoil being placed in valley fills on stream beds rather than on top of mined areas. The reasons for allowing this exemption are not justified, since the lower and more level areas resulting from the exemption are not necessary to sustain ''fish and wildlife habitat and recreation lands.'' Wildlife habitat areas would occur naturally on postmining lands, including areas restored to the approximate original contour, as a result of appropriate reclamation without any special use designation. Increased disposal of excess spoil in valley fills resulting from the proposed exemption will unnecessarily harm aquatic life in headwater streams and possibly downstream reaches, the EPA said.

In response, and in accordance with EPA's non-concurrence stated above, we have not approved the proposed amendment.

V. Director's Decision

Based on the finding above, we are not approving the proposed language ''or fish and wildlife habitat and recreation lands'' at section 22–3–13(c)(3), as submitted on April 28, 1997. In addition, we are requiring that section 22–3–13(c)(3) of the West Virginia program be further amended to remove the phrase ''or fish and wildlife habitat and recreation lands.'' We are also requiring that the term ''public use'' at section 22–3–13(c)(3) be amended to include the term ''facility'' and to further clarify that the State term will be interpreted the same as ''public facility (including recreation facilities) use'' at SMCRA section 515(c)(3).

VI. Procedural Determinations

Executive Order 12866

This rule is exempted from review by the Office of Management and Budget (OMB) under Executive Order 12866 (Regulatory Planning and Review).

Executive Order 12988

The Department of the Interior has conducted the reviews required by section 3 of Executive Order 12988 (Civil Justice Reform) and has determined that, to the extent allowed by law, this rule meets the applicable standards of subsections (a) and (b) of that section. However, these standards are not applicable to the actual language of State regulatory programs and program amendments since each such program is drafted and promulgated by a specific State, not by OSM. Under sections 503 and 505 of SMCRA (30 U.S.C. 1253 and 1255) and 30 CFR 730.11, 732.15, and 732.17(h)(10), decisions on proposed State regulatory programs and program amendments submitted by the States must be based solely on a determination of whether the submittal is consistent with SMCRA and its implementing Federal regulations and whether the other requirements of 30 CFR Parts 730, 731, and 732 have been met.

National Environmental Policy Act

No environmental impact statement is required for this rule since section 702(d) of SMCRA (30 U.S.C. 1292(d)) provides that agency decisions on proposed State regulatory program provisions do not constitute major Federal actions within the meaning of section 102(2)(C) of the National Environmental Policy Act (42 U.S.C. 4332(2)(C)).

Paperwork Reduction Act

This rule does not contain information collection requirements that require approval by OMB under the Paperwork Reduction Act (44 U.S.C. 3507 *et seq.*).

Regulatory Flexibility Act

The Department of the Interior has determined that this rule will not have a significant economic impact on a substantial number of small entities under the Regulatory Flexibility Act (5 U.S.C. 601 *et seq.*). The State submittal which is the subject of this rule is based upon corresponding Federal regulations for which an economic analysis was prepared and certification made that such regulations would not have a significant economic effect upon a substantial number of small entities. Accordingly, this rule will ensure that existing requirements previously promulgated by OSM will be implemented by the State. In making the determination as to whether this rule would have a significant economic impact, the Department relied upon the data and assumptions for the corresponding Federal regulations.

Unfunded Mandates

This rule will not impose a cost of $100 million or more in any given year on any governmental entity or the private sector.

List of Subjects in 30 CFR Part 948

Intergovernmental relations, Surface mining, Underground mining.

Dated: May 4, 1999.

Allen D. Klein,

Regional Director, Appalachian Regional Coordinating Center.

For the reasons set out in the preamble, Title 30, Chapter VII, Subchapter T, of the Code of Federal Regulations is amended as set forth below:

PART 948—WEST VIRGINIA

1. The authority citation for part 948 continues to read as follows:

Authority: 30 U.S.C. 1201 *et seq.*

2. Section 948.15 is amended in the table by adding a new entry in chronological order by ''Date of Final Publication'' to read as follows:

§ 948.15 Approval of West Virginia regulatory program amendments.

* * * * *

Original amendment submission date	Date of final publication	Citation/description
*	*	*
April 28, 1997	May 14, 1999	W.Va. Code 22–3 Section 13(c)(3) [not approved].

3. Section 948.16 is amended by adding new paragraph (iiii) to read as follows:

§ 948.16 Required regulatory program amendments.

* * * * *

(iiii) By July 13, 1999, West Virginia must submit either a proposed amendment or a description of an amendment to be proposed, together with a timetable for adoption, to:

(1) Amend section 22–3–13(c)(3) of the West Virginia program to remove the phrase ''or fish and wildlife habitat and recreation lands''; and

(2) Amend ''public use'' at section 22–3–13(c)(3) to include the term ''facility'' and to further clarify that the term will be interpreted the same as ''public facility (including recreation facilities) use'' at SMCRA section 515(c)(3).

[FR Doc. 99–12212 Filed 5–13–99; 8:45 am]

BILLING CODE 4310–05–P

DEPARTMENT OF TRANSPORTATION

Coast Guard

33 CFR Part 117

[CGD 08–99–028]

Drawbridge Operating Regulation; Gulf Intracoastal Waterway, LA

AGENCY: Coast Guard, DOT.

ACTION: Notice of temporary deviation from regulations.

SUMMARY: The Commander, Eighth Coast Guard District, has issued a temporary deviation from the regulation in 33 CFR 117.451(e) governing the operation of the SR 27 drawbridge across the Gulf Intracoastal Waterway, mile 243.8, west of Harvey Canal Locks, near Hackberry, Calcasieu Parish, Louisiana. This deviation allows the Louisiana Department of Transportation and Development to maintain the bridge in the close-to-navigation position from 7 a.m. until 10 p.m. on Tuesday, June 1, 1999. This temporary deviation is issued to allow for the replacement of the emergency electrical-power supply.

DATES: This deviation is effective from 7 a.m. until 10 p.m. on Tuesday, June 1, 1999.

FOR FURTHER INFORMATION CONTACT: Mr. David Frank, Bridge Administration Branch, Commander (ob), Eighth Coast Guard District, 501 Magazine Street, New Orleans, Louisiana, 70130–3396, telephone number 504–589–2965.

SUPPLEMENTARY INFORMATION: The SR 27 drawbridge across the Gulf Intracoastal Waterway, mile 243.8 west of Harvey Canal Locks, near Hackberry, Calcasieu Parish, Louisiana, has a vertical clearance of 50 feet above high water in the closet-to-navigation position. Navigation on the waterway consists of tugs with tows, fishing vessels, sailing vessels, and other recreational craft. The Louisiana Department of Transportation and Development requested a temporary deviation from the normal operation of the bridge in order to accommodate the replacement of the emergency electrical-power supply and is essential for the continued operation of the draw span.

This deviation allows the draw of the SR 27 bridge across the Gulf Intracoastal Waterway. mile 243.8 west of Harvey Canal Locks, near Hackberry to remain in the closed-to-navigation position from 7 a.m. until 10 p.m. on Tuesday, June 1, 1999. Presently, the draw opens on signal when more than 50 feet of vertical clearance is required, if at least four hours' notice is given to the Louisiana Department of Transportation and Development, District Maintenance Engineer, at Lake Charles, Louisiana.

Dated: May 7, 1999.

A.L. Gerfin, Jr.,

Captain, U.S. Coast Guard, Acting Commander, 8th Coast Guard Dist.

[FR Doc. 99–12273 Filed 5–13–99; 8:45 am]

BILLING CODE 4910–15–M

DEPARTMENT OF TRANSPORTATION

Coast Guard

33 CFR Part 165

[CGD01–99–048]

RIN 2115–AA97

Safety Zone: Pepsi Gala Fireworks, New York Harbor, Upper Bay

AGENCY: Coast Guard, DOT.

ACTION: Temporary final rule.

SUMMARY: The Coast Guard is establishing a temporary safety zone for the Pepsi Gala Fireworks Display located in Federal Anchorage 20C, New York Harbor, Upper Bay. This action is intended to restrict vessel traffic in a portion of Federal Anchorage 20C; it is necessary to provide for the safety of life on navigable waters during the event.

DATES: This rule is effective from 9:30 p.m. until 11p.m. on Saturday, May 15, 1999. There is no rain date for this event.

ADDRESSES: Documents as indicated in this preamble are available for inspection or copying at Coast Guard Activities New York, 212 Coast Guard Drive, room 205, Staten Island, New York 10305, between 8 a.m. and 3 p.m., Monday through Friday, except Federal holidays. The telephone number is (718) 354–4193.

FOR FURTHER INFORMATION CONTACT: Lieutenant J. Lopez, Waterways Oversight Branch, Coast Guard Activities New York (718) 354–4193.

SUPPLEMENTARY INFORMATION:

Regulatory History

Pursuant to 5 U.S.C. 553, no notice of proposed rulemaking (NPRM) was published for this regulation. Good cause exists for not publishing an NPRM and for making this regulation effective less than 30 days after publication in the **Federal Register**. Because of the date

the Application for Approval of Marine Event was received, there was insufficient time to draft and publish an NPRM and publish the final rule 30 days before its effective date. Any delay encountered in this regulation's effective date would be contrary to public interest since immediate action is needed to close the waterway and protect the maritime public from the hazards associated with this fireworks display.

Background and Purpose

On April 21, 1999, Fireworks by Grucci Inc. submitted an application to hold a fireworks program on the waters of Upper New York Bay in Federal Anchorage 20C. The fireworks program is being sponsored by Overland Entertainment Co. This regulation establishes a safety zone in all waters of Upper New York Bay within a 360-yard radius of the fireworks barge in approximate position 40°41′16.5″N 074°02′23″W (NAD 1983), about 360 yards east of Liberty Island, New York. The safety zone is in effect from 9:30 p.m. until 11 p.m. on Saturday, May 15, 1999. There is no rain date for this event. The safety zone prevents vessels from transiting a portion of Federal Anchorage 20C and is needed to protect boaters from the hazards associated with fireworks launched from a barge in the area. Recreational and commercial vessel traffic will be able to anchor in the unaffected northern and southern portions of Federal Anchorage 20C. Federal Anchorages 20A and 20B, to the north, and Federal Anchorages 20D and 20E, to the south, are also available for vessels' use. Marine traffic will still be able to transit through Anchorage Channel, Upper Bay, during the event as the safety zone extends only 125 yards into the 925-yard wide channel. Public notifications will be made before the event by local Notices to Mariners and marine-information broadcasts.

Regulatory Evaluation

This final rule is not a significant regulatory action under section 3(f) of Executive Order 12866 and does not require an assessment of potential costs and benefits under section 6(a)(3) of that Order. It has not been reviewed by the Office of Management and Budget under that Order. It is not significant under the regulatory policies and procedures of the Department of Transportation (DOT) (44 FR 11040; February 26, 1979). The Coast Guard expects the economic impact of this rule to be so minimal that a full Regulatory Evaluation under paragraph 10e of the regulatory policies and procedures of DOT is unnecessary. This finding rests on four facts: (1) the minimal time that vessels will be restricted from the zone, (2) that vessels may safely anchor to the north and south of the zone, (3) that vessels may still transit through Anchorage Channel during the event, and (4) that we will make extensive advance notifications.

Small Entities

Under the Regulatory Flexibility Act (5 U.S.C. 601 *et seq.*), the Coast Guard considered whether this final rule will have a significant economic impact on a substantial number of small entities. ''Small entities'' include small businesses, not-for-profit organizations that are independently owned and operated and are not dominant in their fields, and governmental jurisdictions with populations of less than 50,000.

For reasons discussed in the Regulatory Evaluation above, the Coast Guard certifies under section 605(b) of the Regulatory Flexibility Act (5 U.S.C. 601*et seq.*) that this final rule will not have a significant economic impact on a substantial number of small entities.

Collection of Information

This final rule does not provide for a collection of information under the Paperwork Reduction Act of 1995 (44 U.S.C. 3501 *et seq.*).

Federalism

The Coast Guard has analyzed this final rule under the principles and criteria contained in Executive Order 12612 and has determined that it does not have sufficient implications for federalism to warrant the preparation of a Federalism Assessment.

Unfunded Mandates

Title II of the Unfunded Mandates Reform Act of 1995 (UMRA) (Pub. L. 104–4, 109 Stat. 48) requires Federal agencies to assess the effects of certain regulatory actions on State, local, and tribal governments, and the private sector. UMRA requires a written statement of economic and regulatory alternatives for rules that contain *Federal mandates.* A Federal mandate is a new or additional enforceable duty imposed on any State, local, or tribal government, or the private sector. If any Federal mandate causes those entities to spend, in the aggregate, $100 million or more in any one year, the UMRA analysis is required. This final rule does not impose Federal mandates on any State, local, or tribal governments, or the private sector.

Environment

The Coast Guard considered the environmental impact of this final rule and concluded that under figure 2–1, paragraph 34(g), of Commandant Instruction M16475.1C, this final rule is categorically excluded from further environmental documentation. A ''Categorical Exclusion Determination'' is available in the docket for inspection or copying where indicated under **ADDRESSES.**

Other Executive Orders on the Regulatory Process

In addition to the statutes and Executive Orders already addressed in this preamble, the Coast Guard considered the following executive orders in developing this final rule and reached the following conclusions:

E.O. 12630, Governmental Actions and Interference with Constitutionally Protected Property Rights. This rule will not effect a taking of private property or otherwise have taking implications under this Order.

E.O. 12875, Enhancing the Intergovernmental Partnership. This rule will not impose, on any State, local, or tribal government, a mandate that is not required by statute and that is not funded by the Federal government.

E.O. 12988, Civil Justice Reform. This rule meets applicable standards in sections 3(a) and 3(b)(2) of this Order to minimize litigation, eliminate ambiguity, and reduce burden.

E.O. 13045, Protection of Children from Environmental Health Risks and Safety Risks. This rule is not an economically significant rule and does not concern an environmental risk to safety disproportionately affecting children.

List of Subjects in 33 CFR Part 165

Harbors, Marine Safety, Navigation (water), Reports and recordkeeping requirements, Security measures, Waterways.

Regulation

For the reasons discussed in the preamble, the Coast Guard amends 33 CFR part 165 as follows:

PART 165—[AMENDED]

1. The authority citation for part 165 continues to read as follows:

Authority: 33 U.S.C. 1231; 50 U.S.C. 191; 33 CFR 1.05–1(g), 6.04–1, 6.04–6, and 160.5; 49 CFR 1.46. Section 165.100 is also issued under authority of Sec. 311, Pub. L. 105–383.

2. Add temporary § 165.T01–048 to read as follows:

§ 165.T01–048 Safety Zone: Pepsi Gala Fireworks, New York Harbor, Upper Bay.

(a) *Location.* The following area is a safety zone: All waters of New York Harbor, Upper Bay, within a 360-yard

radius of the fireworks barge in approximate position 40°41′16.5″N 074°02′23″W (NAD 1983), about 360 yards east of Liberty Island, New York.

(b) *Effective period.* This section is effective from 9:30 p.m. until 11 p.m. on Saturday, May 15, 1999. There is no rain date for this event.

(c) *Regulations.* (1) The general regulations contained in 33 CFR 165.23 apply.

(2) All persons and vessels shall comply with the instructions of the Coast Guard Captain of the Port or the designated on-scene-patrol personnel. These personnel comprise commissioned, warrant, and petty officers of the Coast Guard. Upon being hailed by a U.S. Coast Guard vessel by siren, radio, flashing light, or other means, the operator of a vessel shall proceed as directed.

R.E. Bennis,

Captain, U.S. Coast Guard,Captain of the Port, New York.

[FR Doc. 99–12272 Filed 5–13–99; 8:45 am]

BILLING CODE 4910–15–M

DEPARTMENT OF DEFENSE

DEPARTMENT OF TRANSPORTATION

Coast Guard

DEPARTMENT OF VETERANS AFFAIRS

38 CFR Part 21

RIN 2900–AJ38

Reservists' Education: Increase in Educational Assistance Rates

AGENCIES: Department of Defense, Department of Transportation (Coast Guard), and Department of Veterans Affairs.

ACTION: Final rule.

SUMMARY: By statute the monthly rates of basic educational assistance payable to reservists under the Montgomery GI Bill—Selected Reserve must be adjusted each fiscal year in accordance with a statutory formula. The Veterans Benefits Act of 1998 provides a rate increase of approximately 20% that supersedes the otherwise applicable statutory annual adjustment for Fiscal Year 1999 (October 1, 1998, through September 30, 1999). The regulations governing rates of basic educational assistance payable under the Montgomery GI Bill—Selected Reserve are changed to show the rates indicated in the Act for Fiscal Year 1999. By statute, regular annual adjustments to these rates will resume commencing with Fiscal Year 2000.

DATES: Effective Date: This final rule is effective May 14, 1999.

Applicability Date: The changes in rates are applicable October 1, 1998, to conform with statutory requirements. For more information concerning the dates of application, see the

SUPPLEMENTARY INFORMATION SECTION.

FOR FURTHER INFORMATION CONTACT: William G. Susling, Jr., Education Adviser, Education Service, Veterans Benefits Administration, (202) 273–7187.

SUPPLEMENTARY INFORMATION: As provided by the Veterans Benefits Act of 1998 (Pub. L. 105–178, Title VIII, Subtitle B), the rates of basic educational assistance under the Montgomery GI Bill—Selected Reserve payable to students pursuing a program of education full time must be increased by approximately 20% effective October 1, 1998. This final rule changes the regulations to reflect the statutory changes made by section 8203(b) of Pub. L. 105–178.

10 U.S.C. 16131(b) requires that the full-time, three-quarter-time, and half-time rates for institutional training be increased as noted above. These increased rates result in proportionate increases in the benefits payable for other types of training whose rates are based on the institutional training rates. For example, monthly rates payable to reservists in apprenticeship or other on-job training are set by statute at a given percentage of the full-time institutional rate.

10 U.S.C. 16131(b) requires that the Department of Veterans Affairs (VA) pay less-than-half-time students at appropriately reduced rates. Since payment for less-than-half-time training became available under the Montgomery GI Bill—Selected Reserve in Fiscal Year 1990, VA has paid less-than-half-time students at 25% of the full-time institutional rate for pursuit of a program of education. This final rule sets forth changes in rates consistent with the authority and formula described in this paragraph.

Nonsubstantive changes also are made for the purpose of clarity.

The changes set forth in this final rule are effective from the date of publication, but the changes in rates are applied retroactively from October 1, 1998, as set out in the regulations, in accordance with the applicable statutory provisions discussed above.

Substantive changes made by this final rule merely reflect statutory requirements and adjustments made based on previously established formulas. Accordingly, there is a basis for dispensing with prior notice and comment and delayed effective date provisions of 5 U.S.C. 552 and 553.

The Secretary of Defense, the Commandant of the Coast Guard, and the Secretary of Veterans Affairs hereby certify that this final rule will not have a significant economic impact on a substantial number of small entities as they are defined in the Regulatory Flexibility Act, 5 U.S.C. 601–612. This final rule directly affects only individuals and does not directly affect small entities. Pursuant to 5 U.S.C. 605(b), this final rule, therefore, is exempt from the initial and final regulatory flexibility analyses requirements of sections 603 and 604.

There is no Catalog of Federal Domestic Assistance number for the program affected by this final rule.

List of Subjects in 38 CFR Part 21

Administrative practice and procedure, Armed forces, Civil rights, Claims, Colleges and universities, Conflict of interests, Defense Department, Education, Employment, Grant programs-education, Grant programs-veterans, Health programs, Loan programs-education, Loan programs-veterans, Manpower training programs, Reporting and recordkeeping requirements, Schools, Travel and transportation expenses, Veterans, Vocational education, Vocational rehabilitation.

Approved: March 4, 1999.

Togo D. West, Jr.,

Secretary of Veterans Affairs.

Approved: March 26, 1999.

Charles L. Cragin,

Acting Assistant Secretary of Defense for Reserve Affairs.

Approved: April 6, 1999.

F.L. Ames,

Rear Admiral, U.S. Coast Guard Assistant Commandant for Human Resources.

For the reasons set out above, 38 CFR part 21, subpart L is amended as set forth below.

PART 21—VOCATIONAL REHABILITATION AND EDUCATION

Subpart L—Educational Assistance for Members of the Selected Reserve

1. The authority citation for part 21, subpart L is revised to read as follows:

Authority: 10 U.S.C. ch. 1606; 38 U.S.C. 501(a), 512, ch. 36, unless otherwise noted.

2. In § 21.7636, paragraphs (a)(1), (a)(2)(i), and (a)(3) are revised to read as follows:

§ 21.7636 Rates of payment.

(a) *Monthly rate of educational assistance.* (1) Except as otherwise provided in this section or in § 21.7639, the monthly rate of educational assistance payable for training that occurs after September 30, 1998, and before October 1, 1999, to a reservist pursuing a program of education is the amount stated in this table:

Training	Monthly rate
Full time	$251.00
¾ time	188.00
½ time	125.00
¼ time	62.75

(2) The monthly rate of basic educational assistance payable to a reservist for apprenticeship or other on-the-job training full time that occurs after September 30, 1998, and before October 1, 1999, is the rate stated in this table:

(i)

Training period	Monthly rate
First six months of pursuit of training	$188.25
Second six months of pursuit of training	136.05
Remaining pursuit of training	87.85

* * * * *

(3) The monthly rate of educational assistance payable to a reservist for pursuit of a cooperative course after September 30, 1998, and before October 1, 1999, is the rate stated in paragraph (a)(1) of this section for full-time training during that period of time.

(Authority: 10 U.S.C. 16131(b), (c); sec. 8203(b), Pub. L. 105–178, 112 Stat. 493–494)

* * * * *

[FR Doc. 99–12203 Filed 5–13–99; 8:45 am]

BILLING CODE 8320–01–P

ENVIRONMENTAL PROTECTION AGENCY

40 CFR Part 51

[FRL–6338–6]

RIN 2060–AH10

Technical Amendment to the Finding of Significant Contribution and Rulemaking for Certain States for Purposes of Reducing Regional Transport of Ozone

AGENCY: Environmental Protection Agency (EPA).

ACTION: Final rule; technical amendment.

SUMMARY: The EPA is revising the oxides of nitrogen (NO_X) statewide emissions budgets for the 22 States and the District of Columbia that are required to submit State implementation plan (SIP) revisions to address the regional transport of ozone (also referred to as the NO_X SIP call). These revisions are based on the comments received during the comment period for emissions inventory revisions to 2007 baseline sub-inventory information used to establish each State's budget in the NO_X SIP call.

DATES: This rule is effective June 14, 1999.

ADDRESSES: Dockets containing information relating to this rulemaking (Docket Nos. A–96–56, A–97–43, and A–98–12) are available for public inspection at the Office of Air and Radiation Docket and Information Center (6102), U.S. Environmental Protection Agency, 401 M St., SW, Room M–1500, Washington, DC 20460, telephone (202) 260–7548, between 8:00 a.m. and 5:30 p.m., Monday through Friday, excluding legal holidays. A reasonable fee may be charged for copying. Docket materials may be sent by electronic mail to A-and-R-Docket@epa.gov. Documents related to this notice are available on EPA's website at http://epa.gov/ttn/oarpg/otagsip.html.

FOR FURTHER INFORMATION CONTACT: General questions concerning today's technical amendment should be addressed to Kimber S. Scavo, Office of Air Quality Planning and Standards, Air Quality Strategies and Standards Division, MD–15, Research Triangle Park, NC 27711, telephone (919) 541–3354; e-mail: scavo.kimber@epa.gov. Specific questions on the revised NO_X emissions budgets should be directed to Greg Stella, Office of Air Quality Planning and Standards, Emissions Monitoring and Analysis Division, MD–14, Research Triangle Park, NC 27711, telephone (919) 541–3649; e-mail: stella.greg@epa.gov. Specific questions on the electric generating unit (EGU) sector should be directed to Kevin Culligan, Office of Atmospheric Programs, Acid Rain Division, 401 M Street SW, 6204J, Washington, D.C., 20460, telephone (202) 564–9172; e-mail; culligan.kevin@epa.gov.

SUPPLEMENTARY INFORMATION: By notice dated October 27, 1998, EPA published, ''Finding of Significant Contribution and Rulemaking for Certain States in the Ozone Transport Assessment Group Region for Purposes of Reducing Regional Transport of Ozone'' (63 FR 57356), which may be referred to as the NO_X SIP call. The final NO_X SIP call provided that the opportunity for comments on 2007 baseline sub-inventory revisions would be available for 60 days after signature of the NO_X SIP call.

The EPA received numerous requests to allow more time to accept revisions to source-specific inventory data used to establish each State's emissions baseline and budget in the NO_X SIP call and to also allow revisions to vehicle miles traveled (VMT) projections. Therefore, by notice dated December 24, 1998, EPA published, ''Correction and Clarification to the Finding of Significant Contribution and Rulemaking for Purposes of Reducing Regional Transport of Ozone'' (63 FR 71220), which may be referred to as the correction notice.

In these notices, EPA reopened and extended the comment period on emissions inventory revisions to 2007 baseline sub-inventory information used to establish each State's budget in the NO_X SIP call. This included source-specific emission inventory data, data on VMT and nonroad mobile growth rates, VMT distribution by vehicle class, average speed by roadway type, inspection and maintenance program parameters, and other input parameters used in the calculation of highway vehicle emissions. The EPA extended this time period for additional comment to February 22, 1999 in the correction notice.

The EPA is proceeding to final action now based on the comments received from the public in response to this extended comment period. To the extent the Administrative Procedure Act might require publication of a notice of proposed rulemaking for this action, EPA finds good cause to dispense with such proposal, because EPA has already provided an opportunity for public comment (5 U.S.C. 553(b)(B)).

I. Public Comments

The EPA stated in ''Correction and Clarification to the Finding of Significant Contribution and Rulemaking for Purposes of Reducing Regional Transport of Ozone'' that the Agency would evaluate the data submitted by commenters and, if it was determined to be technically justified, revise the State baseline inventory and budgets for the NO_X SIP call to reflect the new data by April 23, 1999. The Agency received approximately 300 comments. The Response to Comment Document (RTC) entitled ''Responses to the 2007 Baseline Sub-inventory Information and Significant Comments for the Final NO_X SIP Call,'' addresses EPA's response to the submitted comments in detail. The EPA also

developed a technical support document (TSD) entitled ''Development of Emission Budget Inventories for the Regional Transport NO_X SIP call.'' Upon promulgation of this technical amendment (i.e., signature), the TSD and RTC documents will be available in the dockets and the website listed above in **ADDRESSES.** All comments were considered in finalizing this technical amendment including numerous comments submitted after the February 22, 1999 deadline and those where the commenter did not adhere to the requests for data that were specified in the final NO_X SIP call and the correction notice. Individuals interested in the specific modifications requested by commenters may review the materials as they were submitted to the dockets.

II. Major Changes to the Statewide NO_X Emissions Budgets

Changes to the Statewide NO_X emissions budgets are mainly in response to the comments submitted during the reopened and extended comment periods indicated in the section above. Each of the sub-inventory sectors of EGU, non-EGU point, area, nonroad mobile, and highway mobile were commented on and affected by these comments and EPA action.

As a result of these revisions, EPA anticipates that full implementation of the NO_X SIP call will reduce total NO_X emissions by 1.142 million tons. This is a slight decrease from the 1.157 million tons in total NO_X reductions from the final NO_X SIP call. The total overall percent reduction decreased slightly from 28 percent to 25 percent as a result of an increase in the emissions inventory baseline. Even though there was a slight increase in the overall NO_X emissions inventory, EPA expects that the air quality benefits and the impacts on cost-effectiveness would remain virtually the same because the emissions change is so small.

The EGU source budgets increased by less than 1 percent. A number of EGU point source units were reclassified to the non-EGU source sector and some non-EGU sources were reclassified to the EGU source sector. Further, in response to comments, the EGU budget also adds previously unidentified EGUs. Overall, the emissions reductions from this sector are similar to the emissions reductions of the final NO_X SIP call.

The non-EGU source budgets increased by 14 percent for several reasons. First, many sources were reclassified from large non-EGUs to small non-EGUs, thereby removing them from the category of sources requiring budget level controls. Second, some non-EGU units for which EPA assumed controls were reclassified to categories for which controls were not assumed; this reclassification results in excluding them from budget level controls (e.g., large industrial boiler reclassified as a glass manufacturer). Many State and local agencies submitted revised non-EGU point source inventories which replaced their final NO_X SIP call inventory for non-EGUs. A number of non-EGU point source units were reclassified to the EGU source sector and a number of EGU sources were reclassified to the non-EGU source sector. The result of all of these reclassifications is that fewer non-EGUs would be subject to EPA's assumed control strategy. Consequently, the overall result of these changes increased the non-EGU budget by 14 percent. Because the 2007 base budget increased, but the total number of units that would be subject to controls under EPA's assumed control strategy decreased, these changes lower the amount of emissions expected to be reduced by the NO_X SIP call by 12,070 tons.

Changes in the stationary area source budgets resulted in an overall budget increase of 11 percent. Some State and local agencies submitted revised stationary area source inventories to replace their final NO_X SIP call inventory. In addition, EPA is applying a more consistent method for calculating ozone season emissions based on typical ozone season daily emissions. To retain consistency in State ozone season estimation methods, EPA is estimating seasonal emissions budgets by multiplying the typical ozone season day emission value by the number of days in the ozone season. Since EPA does not apply any controls to this source sector in calculating the reductions for the final NO_X SIP call, there is no expected effect on the overall reduction due to these changes.

Changes in the nonroad mobile source budget resulted in an overall increase of 19 percent. The EPA applied the same ozone season estimation methods change described above for stationary area sources to the nonroad mobile source budget. Several State and local agencies provided emissions growth and control data for use in estimating the nonroad sector of the budgets. Since EPA does not apply any controls to this source sector in calculating the reductions for the final NO_X SIP call, there is no expected affect on the overall reduction due to these changes.

Changes in the highway mobile source sector resulted in a 14 percent budget increase. Differences in the highway sector of the State emissions budgets are in response to State and local agency comments on VMT, VMT growth, vehicle mix throughout the State, State to county level VMT allocations, speed changes by vehicle and roadway type, and inspection and maintenance program application, as well as EPA's inclusion of excess NO_X emissions from the use of ''defeat devices'' on highway heavy-duty diesel engines. This latter effect is discussed more fully in the following section. Since EPA does not apply any controls to this source sector in calculating the reductions for the final NO_X SIP call, there is no expected effect on the overall reduction due to these changes.

III. Heavy-Duty Diesel Emission Estimates

The final NO_X budget numbers EPA is presenting today include the effects of excess NO_X emissions from highway heavy-duty diesel engines with ''defeat devices.'' These diesel engines use computer software that cause the effectiveness of the engines' emission control systems to be reduced. In essence, the computer software alters the fuel injection timing when the engine operates in certain modes (such as highway driving), causing the engine to emit higher levels of NO_X than indicated by their certification standards or by EPA's existing emission models.

In September of 1998, when EPA developed the budgets for the final NO_X SIP call, EPA had not yet completed its evaluation of the impact of these defeat devices on NO_X emissions. As a result, EPA did not include the added emissions in those NO_X budgets. Since that time, EPA has completed its evaluation and entered into proposed consent decrees with the manufacturers of diesel engines equipped with these devices. These consent decrees would commit the manufacturers to reduce emissions from their engines and cease equipping them with defeat devices according to an agreed-upon schedule, and to take steps to mitigate the emissions effects of existing engines equipped with defeat devices. These mitigation commitments include the early introduction of heavy-duty diesel engines that will meet the more stringent NO_X standards scheduled to take effect in 2004. Additional information regarding the defeat device consent decrees can be found in ''Notices of Filing of Consent Decree under the Clean Air Act'' (63 FR 59330–59334, November 3, 1998). Additional information about defeat devices and their emissions effects can be obtained from the U.S. EPA's Office of Mobile Sources by contacting the Engine Compliance Programs Group at (202) 564–9240 and requesting document

VPCD–98–13 (HD Engine), dated October 15, 1998.

The EPA believes that the emissions impact of defeat devices peaked in the late 1990s and subsequently will decline rapidly as newer engines replace defeat device-equipped engines and as manufacturers undertake the mitigation commitments required under the proposed consent decrees. The final baseline NO_X emission projections and NO_X budgets presented in this notice include the effects of defeat devices and the commitments made by diesel engine manufacturers in the settlement to introduce diesel engines meeting the 2004 standards prior to 2004. Including the emissions due to defeat devices in the statewide NO_X emissions budgets will not, by themselves, alter the emission reductions that will result from the final NO_X SIP call, because the change in baseline and budget amounts is identical. The increase in NO_X budgets varies from State to State but averages approximately 5.6 percent across the entire 37-State OTAG domain, which EPA believes approximates the increase in the States covered by the final NO_X SIP call. The EPA does not believe this increase is sufficiently large to alter the conclusions regarding significant contribution or estimates of the overall benefits of the rule, although it may alter the projected benefits of the rule in specific locations.

The EPA is including the effects of the defeat devices in this technical amendment even though they were not available at the time of proposal or for the final NO_X SIP call. The EPA finds good cause to use this information without prior proposal. Comment would be unnecessary since EPA will be including the effects of the defeat devices in both the calculation of the baseline inventories and the establishment of the SIP call budgets. Because the effects of the defeat devices will be included in both the baseline and the emission levels that must be achieved, inclusion of the effects will not alter the obligations that the affected States must meet to comply with the SIP call. The result of this change does not alter the tons of NO_X reductions that the States must achieve, nor does it change the type of controls States are expected to select to reduce NO_X emissions. This change will more accurately reflect EPA's current understanding of emissions from highway mobile sources. Therefore, EPA finds good cause to include these effects in this final action.

IV. Revised Statewide NO_X Emissions Budgets

The final percent reduction from the 2007 Base Case to the Revised May 3, 1999 Budget for electricity generating sources is shown in Table 1.

TABLE 1.—FINAL NO_X BUDGET COMPONENTS AND PERCENT REDUCTION FOR ELECTRICITY GENERATING UNITS

[Tons/season]

State	Final 2007 base	5/3/99 final budget	Percent reduction
Alabama	76,926	29,002	62
Connecticut	5,636	2,652	53
Delaware	5,838	5,250	10
District of Columbia	3	207	[1] n/a
Georgia	86,455	30,402	65
Illinois	119,311	32,373	73
Indiana	136,773	47,731	65
Kentucky	107,829	36,503	66
Maryland	32,603	14,656	55
Massachusetts	16,479	15,145	8
Michigan	86,600	32,467	63
Missouri	82,097	24,194	71
New Jersey	18,352	10,384	43
New York	39,199	31,009	21
North Carolina	84,815	31,840	62
Ohio	163,132	49,266	70
Pennsylvania	123,102	48,311	61
Rhode Island	1,082	997	8
South Carolina	36,299	16,772	54
Tennessee	70,908	25,814	64
Virginia	40,884	17,187	58
West Virginia	115,490	26,624	77
Wisconsin	51,962	17,375	67
Total	1,501,775	546,181	64

The final percent reduction from the 2007 Base Case to the May 3, 1999 Final Budget for non-electricity generating sources is shown in Table 2.

TABLE 2.—FINAL NO_X BUDGET COMPONENTS AND PERCENT REDUCTION FOR NON-ELECTRICITY GENERATING POINT SOURCES

[Tons/season]

State	Final 2007 base	5/3/99 final budget	Percent reduction
Alabama	58,791	41,865	29
Connecticut	5,124	4,970	3
Delaware	2,370	2,235	6
District of Columbia	300	282	6
Georgia	36,827	29,024	21

TABLE 2.—FINAL NO_X BUDGET COMPONENTS AND PERCENT REDUCTION FOR NON-ELECTRICITY GENERATING POINT SOURCES—Continued

[Tons/season]

State	Final 2007 base	5/3/99 final budget	Percent reduction
Illinois	72,183	58,670	19
Indiana	80,884	53,463	34
Kentucky	29,328	17,861	39
Maryland	15,554	11,568	26
Massachusetts	11,229	10,296	8
Michigan	62,988	53,703	15
Missouri	26,870	23,182	14
New Jersey	18,345	17,863	3
New York	28,281	22,935	19
North Carolina	34,888	27,635	21
Ohio	53,074	39,453	26
Pennsylvania	82,270	67,602	18
Rhode Island	2,031	2,031	0
South Carolina	37,495	27,768	26
Tennessee	53,198	37,994	29
Virginia	54,414	38,617	29
West Virginia	32,235	27,369	15
Wisconsin	22,886	18,584	19
Total	821,563	634,970	23

[1] The majority of D.C.'s capacity is projected to shut down by 2007. Thus the 2007 base tonnage is very low. The budget target for all States is based on current capacity.

The final percent reduction from the 2007 Base Case to the May 3, 1999 Final Budget for stationary area sources is shown in Table 3.

TABLE 3.—FINAL NO_X BUDGET COMPONENTS FOR STATIONARY AREA SOURCES

[Tons/season]

State	Final 2007 base	5/3/99 final budget	Percent reduction
Alabama	28,762	28,762	0
Connecticut	4,821	4,821	0
Delaware	1,129	1,129	0
District of Columbia	830	830	0
Georgia	13,212	13,212	0
Illinois	9,369	9,369	0
Indiana	29,070	29,070	0
Kentucky	31,807	31,807	0
Maryland	4,448	4,448	0
Massachusetts	11,048	11,048	0
Michigan	31,721	31,721	0
Missouri	7,341	7,341	0
New Jersey	12,431	12,431	0
New York	17,423	17,423	0
North Carolina	11,067	11,067	0
Ohio	21,860	21,860	0
Pennsylvania	17,842	17,842	0
Rhode Island	448	448	0
South Carolina	9,415	9,415	0
Tennessee	13,333	13,333	0
Virginia	27,738	27,738	0
West Virginia	5,459	5,459	0
Wisconsin	11,253	11,253	0
Total	321,826	321,826	0

The final percent reduction from the 2007 Base Case to the May 3, 1999 Final Budget for nonroad sources is shown in Table 4.

TABLE 4.—FINAL NO_X BUDGET COMPONENTS FOR NONROAD SOURCES

[Tons/season]

State	Final 2007 base	5/3/99 final budget	Percent reduction
Alabama	20,186	20,186	0

TABLE 4.—FINAL NO_X BUDGET COMPONENTS FOR NONROAD SOURCES—Continued

[Tons/season]

State	Final 2007 base	5/3/99 final budget	Percent reduction
Connecticut	10,736	10,736	0
Delaware	5,651	5,651	0
District of Columbia	3,138	3,138	0
Georgia	26,497	26,497	0
Illinois	57,033	57,033	0
Indiana	26,536	26,536	0
Kentucky	15,042	15,042	0
Maryland	20,121	20,121	0
Massachusetts	20,166	20,166	0
Michigan	26,940	26,940	0
Missouri	20,875	20,875	0
New Jersey	23,565	23,565	0
New York	42,091	42,091	0
North Carolina	22,045	22,045	0
Ohio	43,780	43,780	0
Pennsylvania	30,635	30,635	0
Rhode Island	2,455	2,455	0
South Carolina	14,670	14,670	0
Tennessee	52,985	52,985	0
Virginia	27,867	27,867	0
West Virginia	10,438	10,438	0
Wisconsin	17,975	17,975	0
Total	541,428	541,428	0

The final percent reduction from the 2007 Base Case to the May 3, 1999 Final Budget for highway sources is shown in Table 5.

Table 5.—Final NO_X BUDGET COMPONENTS FOR HIGHWAY VEHICLES

[Tons/season]

State	Final 2007 base	5/3/99 final budget	Percent reduction
Alabama	52,202	52,202	0
Connecticut	19,902	19,902	0
Delaware	8,524	8,524	0
District of Columbia	2,215	2,215	0
Georgia	90,499	90,499	0
Illinois	117,354	117,354	0
Indiana	82,170	82,170	0
Kentucky	54,406	54,406	0
Maryland	30,832	30,832	0
Massachusetts	28,641	28,641	0
Michigan	79,751	79,751	0
Missouri	52,554	52,554	0
New Jersey	35,890	35,890	0
New York	126,664	126,664	0
North Carolina	75,785	75,785	0
Ohio	96,572	96,572	0
Pennsylvania	93,052	93,052	0
Rhode Island	3,879	3,879	0
South Carolina	55,585	55,585	0
Tennessee	67,538	67,538	0
Virginia	73,619	73,619	0
West Virginia	21,325	21,325	0
Wisconsin	70,984	70,984	0
Total	1,339,944	1,339,944	0

The May 3, 1999 final statewide emissions budgets are shown in Table 6.

TABLE 6.—MAY 3, 1999 FINAL STATEWIDE NO_X BUDGETS AND PERCENT REDUCTION

[Tons/season]

State	Final 2007 base	5/3/99 final budget	Tons reduction	Percent reduction
Alabama	236,867	172,037	64,830	27

TABLE 6.—MAY 3, 1999 FINAL STATEWIDE NO_X BUDGETS AND PERCENT REDUCTION—Continued

[Tons/season]

State	Final 2007 base	5/3/99 final budget	Tons reduction	Percent reduction
Connecticut	46,220	43,081	3,138	7
Delaware	23,512	22,789	723	3
District of Columbia	6,485	6,672	(187)	−3
Georgia	253,489	189,634	63,856	25
Illinois	375,250	274,799	100,451	27
Indiana	355,433	238,970	116,463	33
Kentucky	238,412	155,619	82,793	35
Maryland	103,558	81,625	21,933	21
Massachusetts	87,563	85,296	2,267	3
Michigan	288,000	224,582	63,419	22
Missouri	189,737	128,146	61,591	32
New Jersey	108,584	100,133	8,450	8
New York	253,659	240,123	13,536	5
North Carolina	228,600	168,373	60,228	26
Ohio	378,418	250,930	127,487	34
Pennsylvania	346,900	257,441	89,459	26
Rhode Island	9,895	9,810	85	1
South Carolina	153,465	124,211	29,254	19
Tennessee	257,962	197,664	60,298	23
Virginia	224,521	185,027	39,494	18
West Virginia	184,947	91,216	93,731	51
Wisconsin	175,061	136,172	38,889	22
Total	4,526,538	3,384,350	1,142,188	25

Table 7 shows the percent change between the statewide NO_X emissions budgets promulgated on September 24, 1998 and the revised final statewide NO_X emissions budgets of May 3, 1999.

TABLE 7.—PERCENT CHANGES BETWEEN SEPTEMBER 24, 1998 BUDGETS AND MAY 3, 1999 BUDGETS

[Tons/season]

State	9/24/98 total 2007 budget	5/3/99 total 2007 budget	Percent change
Alabama	158,677	172,037	8
Connecticut	40,573	43,081	6
Delaware	18,523	22,789	23
District of Columbia	6,792	6,672	−2
Georgia	177,381	189,634	7
Illinois	210,210	274,799	31
Indiana	202,584	238,970	18
Kentucky	155,698	155,619	0
Maryland	71,388	81,625	14
Massachusetts	78,168	85,296	9
Michigan	212,199	224,582	6
Missouri	114,532	128,146	12
New Jersey	97,034	100,133	3
New York	179,769	240,123	34
North Carolina	151,847	168,373	11
Ohio	239,898	250,930	5
Pennsylvania	252,447	257,441	2
Rhode Island	8,313	9,810	18
South Carolina	109,425	124,211	14
Tennessee	182,476	197,664	8
Virginia	155,718	185,027	19
West Virginia	92,920	91,216	−2
Wisconsin	106,540	136,172	28
Total	3,023,113	3,384,350	12

Table 8 shows each State's final compliance supplement pool.

TABLE 8.—STATE COMPLIANCE SUPPLEMENT POOL

[Tons]

State	Base	Budget	Tonnage reduction	Compliance supplement pool
Alabama	236,867	172,037	64,830	11,350
Connecticut	46,220	43,081	3,138	549
Delaware	23,512	22,789	723	127
District of Columbia	6,485	6,672	−186	0
Georgia	253,489	189,634	63,856	11,179
Illinois	375,250	274,799	100,451	17,586
Indiana	355,433	238,970	116,463	20,390
Kentucky	238,412	155,619	82,793	14,495
Maryland	103,558	81,625	21,933	3,840
Massachusetts	87,563	85,296	2,267	397
Michigan	288,000	224,582	63,419	11,103
Missouri	189,737	128,146	61,591	10,783
New Jersey	108,584	100,133	8,450	1,479
New York	253,659	240,123	13,536	2,370
North Carolina	228,600	168,373	60,228	10,544
Ohio	378,418	250,930	127,487	22,320
Pennsylvania	346,900	257,441	89,459	15,662
Rhode Island	9,895	9,810	85	15
South Carolina	153,465	124,211	29,254	5,122
Tennessee	257,962	197,664	60,298	10,557
Virginia	224,521	185,027	39,494	6,914
West Virginia	184,947	91,216	93,731	16,410
Wisconsin	175,061	136,172	38,889	6,808
Total	4,526,538	3,384,350	1,142,188	200,000

V. Administrative Requirements

A. Congressional Review Act

The Congressional Review Act, 5 U.S.C. 804 *et seq.*, as added by the Small Business Regulatory Enforcement Fairness Act of 1996, generally provides that before a rule may take effect, the agency promulgating the rule must submit a rule report, which includes a copy of the rule, to each House of the Congress and to the Comptroller General of the United States. The EPA will submit a report containing this rule and other required information to the U.S. Senate, the U.S. House of Representatives, and the Comptroller General of the U.S. prior to publication of the rule in the **Federal Register**. This rule is not a ''major rule'' as defined by 5 U.S.C. 804(2).

B. Executive Order 12866

Under Executive Order (E.O.) 12866, (58 FR 51735, October 4, 1993), this technical amendment is not a ''significant regulatory action'' and is therefore not subject to review by the Office of Management and Budget (OMB) because this action simply revises the emissions budget numbers of the NO_X SIP call final rule. The final NO_X SIP call was submitted to OMB for review. The EPA prepared a regulatory impact analysis (RIA) for the final NO_X SIP call titled ''Regulatory Impact Analysis for the NO_X SIP Call, FIP, and Section 126 Petitions.'' The RIA and any written comments from OMB to EPA and any written EPA responses to those comments are included in the docket. The docket is available for public inspection at the EPA's Air Docket Section, which is listed in the **ADDRESSES** section of this preamble. This technical amendment does not create any additional impacts beyond what was promulgated in the final NO_X SIP call, therefore, no additional RIA is needed.

C. Unfunded Mandates Reform Act

This technical amendment also does not impose any enforceable duty, contain any unfunded mandate, or impose any significant or unique impact on small governments as described in the Unfunded Mandates Reform Act of 1995 (UMRA) (Pub. L. 104–4). The EPA did not reach a final conclusion as to the applicability of the requirements of the UMRA to the final NO_X SIP call. The EPA prepared a statement that would be required by UMRA if its statutory provisions applied and has consulted with governmental entities as would be required by UMRA. Because today's technical amendment does not create any additional mandates, no further UMRA analysis is needed.

D. Executive Order 12875

This technical amendment also does not require prior consultation with State, local, and tribal government officials as specified by Executive Order 12875 (58 FR 58093, October 28, 1993). The final NO_X SIP call did not create a mandate on State, local or tribal governments. As explained in the final NO_X SIP call in the discussion of UMRA and the Executive Order 12875, the final rule did not impose an enforceable duty on these entities. Therefore, the Executive Order 12875 does not apply to this technical amendment to the final NO_X SIP call.

E. Executive Order 13084

The EPA stated in the final NO_X SIP call that Executive Order 13084 (63 FR 27655, May 10, 1998) did not apply because the final rule does not significantly or uniquely affect the communities of Indian tribal governments or call on States to regulate NO_X sources located on tribal lands.

F. Executive Order 12898

In addition, since today's action is a technical amendment, this action does not involve special consideration of environmental justice related issues as required by E.O. 12898 (59 FR 7629, February 16, 1994). For the final NO_X SIP call, the Agency conducted a general analysis of the potential changes in ozone and particulate matter levels that may be experienced by minority and low-income populations as a result

of the requirements of the rule. These findings are presented in the RIA.

G. Regulatory Flexibility Act

This technical amendment is not subject to the regulatory flexibility provisions of the Regulatory Flexibility Act (5 U.S.C. 601 *et seq.*). Both the final NO_X SIP call and this technical amendment will not have a significant impact on a substantial number of small entities because this action does not establish requirements applicable to small entities.

H. Executive Order 13045

This technical amendment also is not subject to E.O. 13045 (Protection of Children from Environmental Health Risks and Safety Risks) (62 FR 19885, April 23, 1997) because EPA interprets E.O. 13045 as applying only to those regulatory actions that are based on health or safety risks, such that the analysis required under section 5–501 of the Order has the potential to influence the regulation. This technical amendment is not subject to E.O. 13045 because it does not establish an environmental standard intended to mitigate health or safety risks and is not economically significant under E.O. 12866.

I. National Technology Transfer and Advancement Act

In addition, the National Technology Transfer and Advancement Act of 1997 does not apply because today's technical amendment does not require the public to perform activities conducive to the use of voluntary consensus standards under that Act. The EPA's compliance with these statutes and Executive Orders for the underlying rule, the final NO_X SIP call, is discussed in more detail in 63 FR 57477–81 (October 27, 1998).

J. Judicial Review

Section 307(b)(1) of the Clean Air Act (CAA) indicates which Federal Courts of Appeal have venue for petitions of review of final actions by EPA. This section provides, in part, that petitions for review must be filed in the Court of Appeals for the District of Columbia Circuit if (i) the agency action consists of ''nationally applicable regulations promulgated, or final action taken, by the Administrator,'' or (ii) such action is locally or regionally applicable, if ''such action is based on a determination of nationwide scope or effect and if in taking such action the Administrator finds and publishes that such action is based on such a determination.''

Any final action related to the NO_X SIP call is ''nationally applicable'' within the meaning of section 307(b)(1). As an initial matter, through this rule, EPA interprets section 110 of the CAA in a way that could affect future actions regulating the transport of pollutants. In addition, the NO_X SIP call requires 22 States and the District of Columbia to decrease emissions of NO_X. The NO_X SIP call also is based on a common core of factual findings and analyses concerning the transport of ozone and its precursors between the different States subject to the NO_X SIP call. Finally, EPA has established uniform approvability criteria that would be applied to all States subject to the NO_X SIP call. For these reasons, the Administrator has also determined that any final action regarding the NO_X SIP call is of nationwide scope and effect for purposes of section 307(b)(1). Thus, any petitions for review of final actions regarding the NO_X SIP call must be filed in the Court of Appeals for the District of Columbia Circuit within 60 days from the date final action is published in the **Federal Register**.

H. Paperwork Reduction Act

The EPA stated in the final NO_X SIP call that an information collection request was pending. This action imposes no additional burdens beyond those imposed by the final NO_X SIP call. Any issues relevant to satisfaction of the requirements of the Paperwork Reduction Act will be resolved during review and approval of that information collection request.

List of Subjects in 40 CFR Part 51

Environmental protection, Air pollution control, Administrative practice and procedure, Carbon monoxide, Intergovernmental relations, Nitrogen dioxide, Ozone, Particulate matter, Reporting and recordkeeping requirements, Sulfur oxides, Transportation, Volatile organic compounds.

Dated: May 3, 1999.

Carol M. Browner,

Administrator.

40 CFR part 51 is amended as follows:

PART 51—REQUIREMENTS FOR PREPARATION, ADOPTION, AND SUBMITTAL OF IMPLEMENTATION PLANS

1. The authority citation for part 51 continues to read as follows:

Authority: 42 U.S.C. 7401–7671q.

Subpart G—Control Strategy

2. Section 51.121 is amended by revising paragraphs (e)(2),(e)(3)(iii), and (g)(2)(ii) to read as follows:

§ 51.121 Findings and requirements for submission of State implementation plan revisions relating to emissions of oxides of nitrogen.

* * * * *

(e) * * *

(2) The State-by-State amounts of the NO_X budget, expressed in tons, are as follows:

State	Budget
Alabama	172,037
Connecticut	43,081
Delaware	22,789
District of Columbia	6,672
Georgia	189,634
Illinois	274,799
Indiana	238,970
Kentucky	155,619
Maryland	81,625
Massachusetts	85,296
Michigan	224,582
Missouri	128,146
New Jersey	100,133
New York	240,123
North Carolina	168,373
Ohio	250,930
Pennsylvania	257,441
Rhode Island	9,810
South Carolina	124,211
Tennessee	197,664
Virginia	185,027
West Virginia	91,216
Wisconsin	136,172
Total	3,384,350

(3) * * *

(iii) The State-by-State amounts of the compliance supplement pool are as follows:

State	Compliance supplement pool (tons of NO_X)
Alabama	11,350
Connecticut	549
Delaware	127
District of Columbia	0
Georgia	11,179
Illinois	17,586
Indiana	20,390
Kentucky	14,495
Maryland	3,840
Massachusetts	397
Michigan	11,103
Missouri	10,783
New Jersey	1,479
New York	2,370
North Carolina	10,544
Ohio	22,320
Pennsylvania	15,662
Rhode Island	15
South Carolina	5,122
Tennessee	10,557
Virginia	6,914
West Virginia	16,410
Wisconsin	6,808
Total	200,000

* * * * *

(g) * * *

(2) * * *

(ii) The base year 2007 NO_X emissions sub-inventories for each State, expressed in tons per ozone season, are as follows:

State	EGU	Non-EGU	Area	Nonroad	Highway	Total
Alabama	76,926	58,791	28,762	20,186	52,202	236,867
Connecticut	5,636	5,124	4,821	10,736	19,902	46,220
Delaware	5,838	2,370	1,129	5,651	8,524	23,512
District of Columbia	3	300	830	3,138	2,215	6,485
Georgia	86,455	36,827	13,212	26,497	90,499	253,489
Illinois	119,311	72,183	9,369	57,033	117,354	375,250
Indiana	136,773	80,884	29,070	26,536	82,170	355,433
Kentucky	107,829	29,328	31,807	15,042	54,406	238,412
Maryland	32,603	15,554	4,448	20,121	30,832	103,558
Massachusetts	16,479	11,229	11,048	20,166	28,641	87,563
Michigan	86,600	62,988	31,721	26,940	79,751	288,000
Missouri	82,097	26,870	7,341	20,875	52,554	189,737
New Jersey	18,352	18,345	12,431	23,565	35,890	108,584
New York	39,199	28,281	17,423	42,091	126,664	253,659
North Carolina	84,815	34,888	11,067	22,045	75,785	228,600
Ohio	163,132	53,074	21,860	43,780	96,572	378,418
Pennsylvania	123,102	82,270	17,842	30,635	93,052	346,900
Rhode Island	1,082	2,031	448	2,455	3,879	9,895
South Carolina	36,299	37,495	9,415	14,670	55,585	153,465
Tennessee	70,908	53,198	13,333	52,985	67,538	257,962
Virginia	40,884	54,414	27,738	27,867	73,619	224,521
West Virginia	115,490	32,235	5,459	10,438	21,325	184,947
Wisconsin	51,962	22,886	11,253	17,975	70,984	175,061
Total	1,501,775	821,563	321,826	541,428	1,339,944	4,526,538

Note: Totals may not sum due to rounding.

* * * * *

[FR Doc. 99–11983 Filed 5–13–99; 8:45 am]

BILLING CODE 6560–50–P

ENVIRONMENTAL PROTECTION AGENCY

40 CFR Part 52

[ME61–7010A; A–1–FRL–6338–2]

Approval and Promulgation of Air Quality Implementation Plans; Maine; Approval of Fuel Control Program under Section 211(c)

AGENCY: Environmental Protection Agency (EPA).

ACTION: Direct final rule.

SUMMARY: EPA is approving a State Implementation Plan (SIP) revision submitted by the State of Maine on March 10, 1999, establishing a lower Reid Vapor Pressure (RVP) fuel requirement for gasoline distributed in southern Maine which includes York, Cumberland, Sagadahoc, Kennebec, Androscoggin, Knox, and Lincoln Counties. Maine has developed these fuel requirements to reduce emissions of volatile organic compounds (VOC) in accordance with the requirements of the Clean Air Act (CAA). EPA is approving Maine's fuel requirements into the Maine SIP because EPA has found that the requirements are necessary for southern Maine to achieve the national ambient air quality standard (NAAQS) for ozone.

DATES: This direct final rule is effective on July 13, 1999 without further notice, unless EPA receives adverse comment by June 14, 1999. If adverse comment is received, EPA will publish a timely withdrawal of the direct final rule in the **Federal Register** and inform the public that the rule will not take effect.

ADDRESSES: Comments may be mailed to Susan Studlien, Deputy Director, Office of Ecosystem Protection (mail code CAA), U.S. Government Protection Agency, Region I, One Congress Street, Boston MA 02203. Copies of the State submittal and EPA's technical support document are available for public inspection during normal business hours, by appointment, at the Office of Ecosystem Protection, U.S. Environmental Protection Agency, Region I, One Congress Street, 11th floor, Boston, MA, and Air and Radiation Docket and Information Center, U.S. Environmental Protection Agency, 401 M Street, S.W., (LE–131), Washington, D.C. 20460. In addition, the information is available at the Bureau of Air Quality Control, Department of Environmental Protection, 71 Hospital Street, Augusta, ME 04333.

FOR FURTHER INFORMATION CONTACT: Robert C. Judge, (617) 918–1045.

SUPPLEMENTARY INFORMATION:

I. Background

Under the Clean Air Act Amendments of 1990, southern Maine was divided into three separate ozone nonattainment areas: the Portland area which is comprised of York, Cumberland and Sagadahoc Counties; the Lewiston-Auburn area which is comprised of Androscoggin and Kennebec counties; and the Knox and Lincoln County area. Each of these areas was classified as moderate nonattainment for ozone. The ozone attainment deadline for these areas was initially November 15, 1996. Just downwind from these areas, the largely rural counties of Hancock and Waldo were designated nonattainment and classified as marginal.

To bring these areas into attainment, the State has adopted and implemented a broad range of ozone control measures including stage II vapor recovery on larger facilities, numerous stationary and area source VOC controls, an inspection and maintenance (I/M) program, and the California low emission vehicle program. In addition, the State participated in the federal reformulated gasoline (RFG) program from January 1, 1995 until March 10, 1999 in southern Maine. These measures resulted in significant air quality improvements in southern Maine.

Following adoption of the new ozone NAAQS (described below), EPA has determined that the 1-hour ozone standard no longer applies in certain

areas of the country that were meeting the 1-hour ozone NAAQS (63 FR 31014, 63 FR 39432). In Maine, EPA made this determination for all areas outside the Portland area (63 FR 31014). On December 17, 1998, EPA proposed to make this determination for the Portland area (63 FR 69598).

On July 18, 1997, EPA adopted a new 8-hour ozone standard (62 FR 38856). The new standard defines the new ozone air quality standard which all areas must meet to protect the public health. EPA is required to determine the attainment status of areas with respect to the new standard by July 18, 2000. Current monitoring data for Cumberland, Sagadahoc, York and Hancock counties indicate that these areas are not attaining the 8-hour ozone standard. Thus, despite significant progress toward attaining the 1-hour standard, EPA believes that additional reductions of ozone precursors will be required for these areas to meet the new standard.

On October 13, 1998, Maine's Governor requested that EPA allow the State to discontinue its participation in the federal RFG program, in accordance with the ''opt-out'' procedures set forth in 40 CFR 80.72. At the same time, the Governor committed to ensure that the State adopt a control program which achieved VOC reductions equivalent to those required under the RFG program, specifically identifying fuel controls as the primary replacement options. EPA approved the Governor's opt-out request effective March 10, 1999.

On February 24, 1999, the Maine Board of Environmental Protection (BEP), after a public hearing and comment period, adopted a low-RVP gasoline rule that set limits on the RVP of gasoline sold during the summer months in these seven counties in southern Maine. The rule establishes a phased approach with an ultimate RVP standard of 7.2 pounds per square inch (psi). Specifically, the rule provides that, beginning May 1, 1999 through September 15, 1999, regulated gasoline must have an RVP no greater than 7.8 psi. Beginning May 1, 2000 through September 15, 2000, and each May 1 through September 15 thereafter, no gasoline may be sold with an RVP greater than 7.2 psi. The State's low-RVP rule is codified in Chapter 119 of the Maine Department of Environmental Protection's regulations, entitled ''Motor Vehicle Fuel Volatility Limit.''

The Department of Environmental Protection, on behalf of the BEP, submitted its low-RVP rule to EPA as a revision to the SIP on March 10, 1999, the effective date of Maine's ''opt-out'' of the RFG program. On April 8, 1999, Maine submitted additional technical support for the SIP revision, including materials supporting the State's request to waive Clean Air Act preemption of state fuel controls pursuant to section 211(c)(4) of the Act.

By this low-RVP rule, Maine is ensuring that it replaces the VOC benefits that RFG had been required to achieve. These emission reductions were critical to Maine's attainment of the 1-hour ozone standard in several areas. Further, given currently available monitoring data demonstrating that some of these areas are not meeting the new 8-hour ozone standard, EPA believes that these reductions will help achieve that standard.

II. Reid Vapor Pressure

Reid Vapor Pressure is a measure of a gasoline's volatility at a certain temperature and is a measurement of the rate at which gasoline evaporates and emits VOC; the lower the RVP, the lower the rate of evaporation. The RVP of gasoline can be lowered by reducing the amount of its volatile components, such as butane. Lowering RVP in the summer months can offset the effect of summer temperature upon the volatility of gasoline, which, in turn, lowers emissions of VOC. Because VOC is a necessary component in the production of ground level ozone in hotsummer months, reduction of RVP will help areas achieve the NAAQS for ozone and thereby produce benefits for human health and the environment.

The primary emission benefits from low-RVP gasoline come from reductions in VOC evaporative emissions; exhaust emission reductions are much smaller. Because oxides of nitrogen (NO_X) are a product of combustion, they will not be found in evaporative emissions, and low-RVP gasoline will have little or no effect on NO_X.

III. State Submittal

The fuel program for southern Maine covering York, Cumberland, Sagadahoc, Kennebec, Androscoggin, Knox, and Lincoln Counties establishes limits on gasoline properties that reduce emissions of VOC. The rule controls the RVP of gasoline sold in this area in two steps. Beginning May 1, 1999 through September 15, 1999, the gasoline sold must have an RVP no greater than 7.8 psi, and from May 1, 2000 through September 15, 2000, and each May 1 through September 15 thereafter, no gasoline may be sold with an RVP greater than 7.2 psi. These same counties in Maine had previously participated in the federal RFG program.

IV. Clean Air Act Requirements

In determining the approvability of a SIP revision, EPA must evaluate the proposed revision for consistency with the requirements of the CAA and EPA regulations, as found in section 110 and part D of the CAA and 40 CFR part 51 (Requirements for Preparation, Adoption, and Submittal of Implementation Plans).

For SIP revisions addressing certain fuel measures, an additional statutory requirement applies. CAA section 211(c)(4)(A) prohibits state regulations respecting a fuel characteristic or component for which EPA has adopted a control or prohibition under section 211(c)(1), unless the state control is identical to the federal control. Section 211(c)(4)(C) provides an exception to this preemption if EPA approves the state requirements in a SIP. Section 211(c)(4)(C) states that the Administrator may approve preempted state fuel standards in a SIP:

> only if [s]he finds that the State control or prohibition is necessary to achieve the national primary or secondary ambient air quality standard which the plan implements. The Administrator may find that a State control or prohibition is necessary to achieve that standard if no other measures that would bring about timely attainment exist, or if other measures exist and are technically possible to implement, but are unreasonable or impracticable.

EPA's August, 1997 ''Guidance on Use of Opt-in to RFG and Low RVP Requirements in Ozone SIPS'' gives further guidance on what EPA is likely to consider in making a finding of necessity.

V. EPA Evaluation

A. General SIP Requirements

As discussed below, EPA has evaluated the submitted SIP revision and has determined that it is consistent with the requirements of the CAA and EPA regulations. EPA has found that the March 10, 1999, SIP revision, as supplemented by the additional technical support submitted on April 8, 1999, conforms to EPA's completeness criteria in 40 CFR part 51, appendix V.

The SIP submittal contains: (1) Chapter 119, Maine Department of Environmental Protection regulations, as adopted by the Maine Board of Environmental Protection on February 24, 1999 and effective on March 9, 1999; (2) documentation of the public notice dated December 22, 1998, and a transcript of the public hearing regarding the amendment of Chapter 119, dated January 20, 1999; (3) evidence of State legal authority; and (4) application for waiver of federal

preemption. Information regarding prohibitions on the sale of non-conforming gasoline, test procedures and sampling for the SIP revision can be found in Chapter 119 of the Maine Department of Environmental Protection regulations, and Maine statutes on enforcement and penalties can be found at Title 38 of Maine Revised Statutes Annotated (M.R.S.A.) Sections 348 and 349. EPA has concluded that these provisions confer on the State the requisite authority to enforce compliance with the 7.2 psi (and initial 7.8 psi) RVP limit.

B. Section 211(c)(4)(C)

1. Federal Preemption

CAA section 211(c)(4)(A) preempts certain state fuel regulations by prohibiting a state from prescribing or attempting to enforce any control or prohibition respecting any characteristic or component of a fuel or fuel additive for the purposes of motor vehicle emission control if theAdministrator has prescribed under section 211(c)(1) a control or prohibition applicable to such characteristic or component of the fuel or fuel additive, unless the state prohibition is identical to the prohibition or control prescribed by the Administrator.

EPA first proposed to regulate summertime gasoline RVP pursuant to 211(c)(1) of the Act in 1987 (52 FR 31274). EPA's gasoline RVP proposal resulted in a two-phased final regulation that Congress incorporated into the CAA at section 211(h). Phase I of the regulation took effect in 1990 (54 FR 11868) for the years 1990 and 1991. Phase II of the regulation became effective in 1992 (55 FR 23658). These regulations are found in 40 CFR 80.27. Under the regulations, the continental United States is divided into two control regions, Class B and Class C. Generally speaking, the Class B states are the warmer southern and western states, and Class C states are the cooler northern states. The Phase II regulation limits the volatility of gasoline sold during the high ozone season to 9.0 psi RVP for Class C areas and 7.8 psi RVP for Class B ozone nonattainment areas. Maine is a Class C state and is therefore required under the federal rule to meet the 9.0 psi RVP standard. *See* 40 CFR 80.27(a)(2).

Because Maine's fuel requirement for the southern Maine area limiting summertime RVP to 7.2 psi is not identical to the federal fuel standards applicable to the fuel characteristic RVP (i.e., federal phase II volatility limit of 9.0 psi), Maine's requirement is preempted unless it is approved into the Maine SIP.

2. Necessity

A state may prescribe and enforce an otherwise preempted low-RVP requirement only if the EPA approves the control into the state's SIP. In order to approve a preempted state fuel control into a SIP, EPA must find that the state control is necessary to achieve a NAAQS. In order to demonstrate the necessity of a fuel control, the state must show either that no other measures exist to bring about timely attainment, or that such measures, while technically possible, are unreasonable or impracticable. Thus, to determine whether Maine's low-RVP rule is necessary to meet the ozone NAAQS, EPA must consider whether there are other reasonable and practicable measures available to produce the needed emission reductions for ozone control.

With the State's decision to opt-out of the federal RFG program, additional VOC reductions are necessary to ensure that the Portland area continues to meet the 1-hour ozone standard and to help the entire area achieve the new 8-hour ozone standard. The Portland area has measured air quality meeting the 1-hour standard by a slim margin (i.e., the design value for the area was 0.124 ppm, just below the 0.125 ppm standard). Given the narrow margin of attainment, it is clear that the VOC reductions provided by participation of the seven counties of southern Maine in the federal RFG program were critical to the Portland area's achievement of the ozone NAAQS.

For purposes of demonstrating necessity, EPA has used the VOC reductions provided by RFG as an estimate of the emission reductions that are necessary for southern Maine to achieve the ozone NAAQS. EPA believes this estimate of necessary reductions is conservative in that it is based on the reductions needed for attainment of the 1-hour ozone standard rather than the reduction needed for the new 8-hour standard. Current monitoring data in Cumberland, Hancock, York and Sagadahoc counties suggest that additional reductions will be necessary for the state to achieve the new 8-hour standard.

In its 15-percent rate of progress plan for the Portland area, Maine had estimated that RFG would achieve 6.96 tons of VOC reduction per summer day. This figure was calculated using only vehicle miles traveled in the three-county Portland area. The sale of RFG in the surrounding four counties further benefitted the Portland area due to driving patterns into and around the Portland area and the geographic proximity of these surrounding counties.

With this estimate of the VOC reductions necessary to achieve the ozone NAAQS, the State evaluated an extensive list of non-fuel alternative controls to determine if reasonable and practicable controls could be implemented to provide sufficient VOC reductions in a timely manner. The State analyzed potential control measures by reviewing previously prepared emission inventories to determine if other non-fuel control measures could be adopted, and used to replace the VOC reductions that RFG had achieved. They reviewed all the source categories that comprised the emission inventory, and evaluated control measures on each source category. For a variety of reasons, most control measures were either already implemented, or were found to be unreasonable or impracticable for achieving reductions in advance of the 1999 and/or 2000 ozone season.

As one example, the State evaluated the possibility of further controlling gasoline refueling, or ''stage II,'' emissions. The State does have a stage II program for larger facilities, but expanding the geographic coverage, and requiring smaller facilities (i.e., gas stations) to comply would yield among the most additional VOC reductions of any control strategy that the State reviewed. The State concluded that first, a legislative change, as well as a regulatory change, would be necessary to further control emissions from this source category. Further, the actual installation of these controls would take a number of additional months, which would be beyond the time frame that Maine needed to secure the emission reductions. For these reasons, the State concluded that further stage II controls were not a practical measure for achieving VOC emission reductions in advance of the summer of 1999. EPA believes implementation of such controls would be difficult and impractical to achieve these reductions even by the summer of 2000. Other control measures were similarly evaluated, and determined to be either technically impossible or unreasonable and impracticable.

The State's analysis identified several non-fuel alternative controls that could conceivably be implemented by the summer of 2000 — the time frame for complete adoption of the phased low-RVP standard. At best, adoption of all available measures would result in about 4.5 tons per day (tpd) reduction (assuming stage II could be

implemented) which is 2.46 tpd less than the estimated necessary VOC reductions. Thus, even with implementation of all reasonable and practicable non-fuel control measures, additional VOC reductions are necessary.

Maine's low-RVP rule will achieve approximately 7 tpd of VOC reductions once fully implemented beginning the summer of 2000 (based on vehicle miles traveled in the Portland area). Due to the driving patterns and proximity of the surrounding four counties, EPA believes RVP controls in these areas will further benefit the Portland area. EPA believes these emission reductions are necessary to achieve the applicable ozone NAAQS in southern Maine. EPA is basing today's action on the information available to the Agency at this time, which indicates that adequate reasonable and practicable non-fuel measures are not available to the State that would achieve these needed emission reductions, and protect Maine's air quality in a timely manner. Hence, EPA is finding that the RVP standards are necessary for attainment of the applicable ozone NAAQS, and EPA is approving them as a revision to the Maine SIP.

Final Action

EPA has evaluated the submitted SIP revision and has determined that it is consistent with the CAA and EPA regulations. EPA has also found that this two-step low-RVP fuel control measure is necessary to achieve the ozone NAAQS in southern Maine pursuant to the CAA. Therefore, EPA is approving the Maine low-RVP rule as submitted on March 10, 1999 into the Maine SIP.

EPA is publishing this action without prior proposal because the Agency views this as a noncontroversial amendment and anticipates no adverse comments. Further, the State has requested approval of this action in advance of this summer season. However, in the proposed rules section of this **Federal Register** publication, EPA is publishing a separate document that will serve as the proposal to approve the SIP revision should relevant adverse comments be filed. This rule will be effective July 13, 1999 without further notice unless the Agency receives relevant adverse comments by June 14, 1999.

If EPA receives such comments, then EPA will publish a notice withdrawing the final rule and informing the public that the rule will not take effect. All public comments received will then be addressed in a subsequent final rule based on the proposed rule. EPA will not institute a second comment period on the proposed rule. All parties interested in commenting on this action should do so at this time. If no such comments are received, the public is advised that this rule will be effective on July 13, 1999 and no further action will be taken on the proposed rule.

Nothing in this action should be construed as permitting or allowing or establishing a precedent for any future request for revision to any State implementation plan. Each request for revision to the State implementation plan shall be considered separately in light of specific technical, economic, and environmental factors and in relation to relevant statutory and regulatory requirements.

VI. Administrative Requirements

A. Executive Order 12866

The Office of Management and Budget (OMB) has exempted this regulatory action from Executive Order (E.O.) 12866, entitled ''Regulatory Planning and Review.''

B. Executive Order 12875

Under E.O. 12875, EPA may not issue a regulation that is not required by statute and that creates a mandate upon a state, local, or tribal government, unless the Federal government provides the funds necessary to pay the direct compliance costs incurred by those governments, or EPA consults with those governments. If EPA complies by consulting, Executive Order 12875 requires EPA to provide to the Office of Management and Budget, a description of the extent of EPA's prior consultation with representatives of affected state, local, and tribal governments, the nature of their concerns, copies of written communications from the governments, and a statement supporting the need to issue the regulation. In addition, E.O. 12875 requires EPA to develop an effective process permitting elected officials and other representatives of state, local, and tribal governments ''to provide meaningful and timely input in the development of regulatory proposals containing significant unfunded mandates.''

Today's rule does not create a mandate on state, local or tribal governments that does not already exist as a matter of State law. EPA is simply approving a state regulation under the Clean Air Act. Accordingly, the requirements of section 1(a) of E.O. 12875 do not apply to this rule.

C. Executive Order 13045

Protection of Children from Environmental Health Risks and Safety Risks (62 FR 19885, April 23, 1997), applies to any rule that: (1) is determined to be ''economically significant'' as defined under E.O. 12866, and (2) concerns an environmental health or safety risk that EPA has reason to believe may have a disproportionate effect on children. If the regulatory action meets both criteria, the Agency must evaluate the environmental health or safety effects of the planned rule on children, and explain why the planned regulation is preferable to other potentially effective and reasonably feasible alternatives considered by the Agency.

This rule is not subject to E.O. 13045 because it is not ''economically significant'' as defined under E. O. 12866, and does not involve an action that addresses environmental or safety risks.

D. Executive Order 13084

Under E.O. 13084, EPA may not issue a regulation that is not required by statute, that significantly uniquely affects the communities of Indian tribal governments, and that imposes substantial direct compliance costs on those communities, unless the Federal government provides the funds necessary to pay the direct compliance costs incurred by the tribal governments, or EPA consults with those governments. If EPA complies by consulting, Executive Order 13084 requires EPA to provide to the Office of Management and Budget, in a separately identified section of the preamble to the rule, a description of the extent of EPA's prior consultation with representatives of affected tribal governments, a summary of the nature of their concerns, and a statement supporting the need to issue the regulation. In addition, Executive Order 13084 requires EPA to develop an effective process permitting elected officials and other representatives of Indian tribal governments ''to provide meaningful and timely input in the development of regulatory policies on matters that significantly or uniquely affect their communities.''

Today's rule does not significantly or uniquely affect the communities of Indian tribal governments. This action does not involve or impose any requirements that affect Indian Tribes. Accordingly, the requirements of section 3(b) of E.O. 13084 do not apply to this rule.

E. Regulatory Flexibility Act

The Regulatory Flexibility Act (RFA) generally requires an agency to conduct a regulatory flexibility analysis of any rule subject to notice and comment rulemaking requirements unless the

agency certifies that the rule will not have a significant economic impact on a substantial number of small entities. Small entities include small businesses, small not-for-profit enterprises, and small governmental jurisdictions. This final rule will not have a significant impact on a substantial number of small entities because SIP approvals under section 110 and subchapter I, part D of the Clean Air Act do not create any new requirements but simply approve requirements that the State is already imposing. Therefore, because the Federal SIP approval does not create any new requirements, I certify that this action will not have a significant economic impact on a substantial number of small entities. Moreover, due to the nature of the Federal-State relationship under the Clean Air Act, preparation of flexibility analysis would constitute Federal inquiry into the economic reasonableness of state action. The Clean Air Act forbids EPA to base its actions concerning SIPs on such grounds. *Union Electric Co.,* v. *U.S. EPA,* 427 U.S. 246, 255–66 (1976); 42 U.S.C. 7410(a)(2).

F. Unfunded Mandates

Under sections 202 of the Unfunded Mandates Reform Act of 1995 (''Unfunded Mandates Act''), signed into law on March 22, 1995, EPA must prepare a budgetary impact statement to accompany any proposed or final rule that includes a Federal mandate that may result in estimated costs to State, local, or tribal governments in the aggregate, or to the private sector, of $100 million or more. Under section 205, EPA must select the most cost-effective and least burdensome alternative that achieves the objectives of the rule and is consistent with statutory requirements. Section 203 requires EPA to establish a plan for informing and advising any small governments that may be significantly or uniquely impacted by the rule.

EPA has determined that this final approval action does not include a Federal mandate that may result in estimated costs of $100 million or more to either State, local, or tribal governments in the aggregate, or to the private sector. This Federal action approves pre-existing requirements under State or local law, and imposes no new requirements. Accordingly, no additional costs to State, local, or tribal governments, or to the private sector, result from this action.

G. Submission to Congress and the Comptroller General

The Congressional Review Act, 5 U.S.C. 801 *et seq.,* as added by the Small Business Regulatory Enforcement Fairness Act of 1996, generally provides that before a rule may take effect, the agency promulgating the rule must submit a rule report, which includes a copy of the rule, to each House of the Congress and to the Comptroller General of the United States. EPA will submit a report containing this rule and other required information to the U.S. Senate, the U.S. House of Representatives, and the Comptroller General of the United States prior to publication of the rule in the **Federal Register**. This rule is not a ''major rule'' as defined by 5 U.S.C. 804(2).

H. Petitions for Judicial Review

Under section 307(b)(1) of the Clean Air Act, petitions for judicial review of this action must be filed in the United States Court of Appeals for the appropriate circuit by July 13, 1999. Filing a petition for reconsideration by the Administrator of this final rule does not affect the finality of this rule for the purposes of judicial review nor does it extend the time within which a petition for judicial review may be filed, and shall not postpone the effectiveness of such rule or action. This action may not be challenged later in proceedings to enforce its requirements. (See section 307(b)(2).) EPA encourages interested parties to comment in response to the proposed rule rather than petition for judicial review, unless the objection arises after the comment period allowed for in the proposal.

List of Subjects in 40 CFR Part 52

Environmental protection, Air pollution control, Carbon monoxide, Hydrocarbons, Incorporation by reference, Intergovernmental relations, Nitrogen dioxide, Ozone, Reporting and recordkeeping requirements.

Authority: 42 U.S.C. 7401 *et seq.*

Dated: April 29, 1999.

John P. DeVillars,

Regional Administrator, Region I.

Part 52 of chapter I, title 40 of the Code of Federal Regulations is amended as follows:

PART 52—[AMENDED]

1. The authority citation for part 52 continues to read as follows:

Authority: 42 U.S.C. 7401 et seq.

Subpart U—Maine

2. Section 52.1020 is amended by adding paragraph (c)(49) to read as follows:

§ 52.1020 Identification of plan.

* * * * *

(c) * * *

(49) Revisions to the State Implementation Plan submitted by the Maine Department of Environmental Protection on March 10, 1999.

(i) Incorporation by reference.

Chapter 119 of the Maine Department of Environmental Protection rules entitled ''Motor Vehicle Fuel Volatility Limit,'' as dated as approved on March 9, 1999.

(ii) Additional material.

(A) Letter from the Maine Department of Environmental Protection dated March 10, 1999 submitting a revision to the Maine State Implementation Plan.

(B) Additional technical support for Section 211(c) waiver submitted by Maine DEP on April 8, 1999.

4. In § 52.1031, Table 52.1031 is amended by revising citation 119 for vehicle inspection and maintenance to read as follows:

§ 52.1031 EPA-approved Maine regulations.

* * * * *

TABLE 52.1031.—EPA-APPROVED RULES AND REGULATIONS

State citation	Title/Subject	Date adopted by State	Date approved by EPA	Federal Register citation	52.1020	
*	*	*	*	*	*	*
119	Motor Vehicle Fuel Volatility Limit.	March 9, 1999	May 14, 1999	[Insert FR citation from published date].	49	Maine Motor Vehicle Fuel Volatility Limit. Amends previously approved regulation to require that fuel with a further volatility controls be sold in York, Cumberland, Sagadahoc, Androscoggin, Kennebec, Knox and Lincoln Counties. The RVP limit during the summer will begin in 1999 with a 7.8 psi limit, and drop to 7.2 psi in each subsequent summer.
*	*	*	*	*	*	*

[FR Doc. 99–11827 Filed 5–13–99; 8:45 am]

BILLING CODE 6560–50–P

ENVIRONMENTAL PROTECTION AGENCY

40 CFR Part 63

[AD–FRL–6343–1]

RIN 2060–A128

Hazardous Air Pollutants: Regulations Governing Equivalent Emission Limitations by Permit

AGENCY: Environmental Protection Agency (EPA).

ACTION: Withdrawal of direct final rule.

SUMMARY: Due to receipt of an adverse comment, EPA is withdrawing an April 16, 1999 direct final rule (64 FR 18824) which would have amended the rule implementing Clean Air Act section 112(j) to extend the section 112(j) permit application deadline for sources in 7-year source categories until December 15, 1999. Having withdrawn the direct final rule, EPA is today taking final action to extend the section 112(j) permit application deadline based on the proposed rule which was also published on April 16, 1999 (64 FR 18862).

DATES: The direct final rule to amend the section 112(j) permit application deadline, which was published on April 16, 1999 (64 FR 18827), is hereby withdrawn as of May 14, 1999.

ADDRESSES: Docket No. A–93–32 containing information pertaining to this rulemaking is available for public inspection and copying between 8 a.m. and 5:30 p.m., Monday through Friday, excluding holidays. The docket is located in the EPA's Air and Radiation Docket and Information Center, Waterside Mall, Room M–1500, 401 M Street, SW, Washington, DC 20460, or by calling (202) 260–7548. A reasonable fee may be charged for copying docket materials.

FOR FURTHER INFORMATION CONTACT: Mr. James Szykman at (919) 541–2452, Emission Standards Division (MD–13), Environmental Protection Agency, Research Triangle Park, North Carolina 27711, electronic mail address is szykman.jim@epa.gov.

SUPPLEMENTARY INFORMATION: On April 16, 1999, EPA published a direct final rule (64 FR 18824) and a parallel proposal (64 FR 18862) to amend the section 112(j) permit application deadline in the Regulations Governing Equivalent Emission Limitations by Permit. This amendment would extend to December 15, 1999 the permit application deadline for major sources subject to 7-year MACT standards which were not promulgated in a timely manner.

The EPA stated in the direct final rule that if relevant, adverse comments were received by April 26, 1999, the EPA would publish a notice withdrawing the direct final rule before its effective date of May 17, 1999. The EPA received adverse comments on the direct final rule from one commenter on April 26, 1999 and is, therefore, withdrawing the direct final rule. The EPA will address these comments in a final rule extending the section 112(j) permit application deadline for major sources subject to 7-year MACT standards published elsewhere in today's **Federal Register**.

Dated: May 10, 1999.

Carol M. Browner,

Administrator.

[FR Doc. 99–12242 Filed 5–13–99; 8:45 am]

BILLING CODE 6560–50–P

ENVIRONMENTAL PROTECTION AGENCY

40 CFR Part 63

[AD–FRL–6343–2]

RIN 2060–A128

Hazardous Air Pollutants: Amendment to Regulations Governing Equivalent Emission Limitations by Permit

AGENCY: Environmental Protection Agency (EPA).

ACTION: Final rule.

SUMMARY: This final rule adopts an amendment to the Regulations Governing Equivalent Emission Limitation by Permit proposed in the **Federal Register** on April 16, 1999 (64 FR 18862). This action amends the rule implementing Clean Air Act section 112(j) to extend the section 112(j) permit application deadline for sources in 7-year source categories until December 15, 1999.

EFFECTIVE DATE: May 14, 1999.

ADDRESSES: *Docket.* The administrative record for this rulemaking may be found in Docket No. A–93–32. The docket is available for public inspection and copying between 8:00 a.m. and 5:30 p.m., Monday through Friday, at the EPA's Air and Radiation Docket and Information Center (6102), 401 M Street, SW, Washington, DC 20460, or by calling (202) 260–7548. A reasonable fee may be charged for copying. An electronic version of this rule is available for download through the EPA web site at: http://www.epa.gov/ttn/oarpg. For further information and general questions regarding the Technology Transfer Network (TTNWEB), call Mr. Hersch Rorex, (919) 541–5637 or Mr. Phil Dickerson, (919) 541–4814.

FOR FURTHER INFORMATION CONTACT: For information concerning this rule, contact Mr. James Szykman or Mr. David Markwordt, Emission Standards Division (MD–13), U.S. Environmental Protection Agency, Research Triangle Park, North Carolina 27711, telephone (919) 541–2452 (Szykman), or (919) 541–0837 (Markwordt), e-mail szykman.jim@epa.gov and markwordt.david@epa.gov.

SUPPLEMENTARY INFORMATION: Entities potentially affected by this action are owners or operators of major sources that fall into one of the following source categories:

Category	Affected source categories
Industry	hydrogen fluoride production; primary lead smelting; ferroalloys production; steelpickling—HCl processes; oil and natural gas production; butadiene-furfural cotrimer (R–11) production; 4-chloro-2-methyl phenoxyacetic acid production; 22, 4–D salts and esters production; 4, 6-dinitro-o-cresol production; captafol production; captan production; chloroneb production; chlorothalonil production; dacthal (tm) production; sodium pentachlorophenate production; tordon (tm) acid production; acrylic fibers/modacrylic fibers production; acetal resins production; mineral wool production; portland cement manufacturing; wool fiberglass manufacturing; polycarbonates production; polyether polyols production; phosphate fertilizer production; phosphoric acid manufacturing; publicly owned treatment works; amino resins production; phenolic resins production; secondary aluminum production; and pulp and paper (combustion).

The information presented in this preamble is organized as follows:

I. Background
II. Public Comment on the April 16, 1998 Proposal
III. Judicial Review
IV. Administrative Requirements
A. Docket
B. Paperwork Reduction Act
C. Executive Order 12866
D. Executive Order 12875
E. Executive Order 13045
F. Executive Order 13084
G. Submission to Congress and the General Accounting Office
H. National Technology Transfer and Advancement Act

I. Background

On May 20, 1994, the Agency promulgated a rule (59 FR 26429) governing the establishment of equivalent emission limitations by permit, pursuant to section 112(j) of the Clean Air Act (Act). After the effective date of a title V permit program in a State, each owner or operator of a major source in a source category for which the EPA was scheduled, but failed, to promulgate a section 112(d) emission standard will be required to obtain an equivalent emission limitation by permit. The permit application must be submitted to the title V permitting authority 18 months after the EPA's missed promulgation date.

On April 16, 1999, the Agency issued a direct final rule (64 FR 18824) and a parallel proposed rule (64 FR 18862) to amend the original Regulations Governing Equivalent Emission Limitations by Permit rule. This amendment would extend until December 15, 1999 the permit application deadline for major sources subject to 7-year maximum achievable control technology (MACT) standards which were not promulgated in a timely manner.

Due to receipt of an adverse comment, the EPA has withdrawn the direct final rule and is instead issuing this final rule extending the deadline pursuant to the proposal. This action is needed to alleviate unnecessary paperwork for both major source owners or operators and permitting agencies.

II. Public Comment on the April 16, 1999 Proposal

One timely adverse comment was submitted in response to the April 16, 1999 proposed rule. The commenter opposed the delay in the permit application deadline from May 15, 1999 to December 15, 1999, stating that EPA erroneously concluded that no environmental benefit would be lost by delaying the permit application deadline until December 15, 1999.

In his first argument, the commenter stated that the existence of a consent decree requiring promulgation of 25 source categories by May 15, 1999 is irrelevant. The commenter further stated that it is unreasonable to assume, based on EPA's current rate of promulgating the 7-year standards, that EPA will be able to promulgate the remaining 7-year standards in accordance with the consent decree, which requires 25 source categories by May 15, 1999.

The EPA does not agree that the deadlines established by the consent decree are ''irrelevant.'' Before agreeing to the schedule embodied in the proposed consent decree, The EPA assessed the current status of each 7-year source category standard in order to select realistic promulgation dates for each standard included in the consent decree. The EPA fully intends to meet the time frames established in the consent decree for promulgation of the standards.

Moreover, EPA believes that the commenter's stated concerns about the potential inability of EPA to meet every promulgation deadline in the consent decree actually are consistent with the Agency's stated rationale for extending the section 112(j) permit application deadline. One of the principal objectives of the extension is to minimize the necessity for preparation of precautionary applications by sources that cannot be completely certain whether EPA will promulgate a MACT standard by the dates specified in the consent decree. EPA believes that preparation of such contingent applications would be totally futile and represent an unnecessary waste of resources.

In his second argument, the commenter stated that even if EPA promulgates the standards for the 25 source categories by May 15, 1999, in accordance with the consent decree, that there is no assurance the standards

will be enforceable. The commenter also states that Federally Enforceable Equivalent Emissions by Permit will, in the absence of an enforceable MACT standard, provide environmental benefits in excess of the de minimis levels upon which the proposal was based.

The EPA does not agree that the commenter's second argument is relevant to the proposed action. The obligation to submit a section 112(j) permit application is based on the failure by EPA to promulgate a MACT standard governing the category or subcategory in question in a timely manner. Any alleged limitations on the enforceability of the promulgated standard are not germane. Moreover, EPA does not agree with the commenter's apparent premise that MACT emission limitations adopted on a case-by-case basis are more enforceable than a generally applicable MACT standard.

Nothing in the adverse comments which were submitted change in any way the prior determination by EPA that extension of the section 112(j) permit application deadline is warranted. Therefore, EPA affirms the rationale for extension of the deadline set forth in the April 16, 1999 **Federal Register** notices and is today promulgating the proposed extension in the form which was proposed on that date. In light of the notice of this change which EPA has provided previously, the final amendment will be effective immediately.

III. Judicial Review

Under section 307(b)(1) of the Act, judicial review of this final rule is available only by the filing of a petition for review in the U.S. Court of Appeals for the District of Columbia Circuit by July 13 1999. Any such judicial review is limited to only those objections which are raised with reasonable specificity in timely comments. Under section 307(b)(2) of the Act, the requirements that are the subject of this final rule may not be challenged later in civil or criminal proceedings brought by EPA to enforce these requirements.

IV. Administrative Requirements

A. Docket

The record supporting this final rule is included in Docket No. A–93–32, the same docket as the original final rule. This docket is available for public inspection at the EPA's Air and Radiation Docket and Information Center, the location of which is given in the **ADDRESSES** section of this notice.

B. Paperwork Reduction Act

The information collection requirements in this rule will be submitted for approval to the Office of Management and Budget (OMB) under the Paperwork Reduction Act, 44 U.S.C. 3501 *et seq.* An Information Collection Request (ICR) document will be prepared by EPA and a copy will be available from Sandy Farmer by mail at OP Regulatory Information Division; U.S. Environmental Protection Agency (2137); 401 M St., SW; Washington, DC 20460, by e-mail at farmer.sandy@epa.gov, or by calling (202) 260–2740. A copy may also be downloaded off the internet at http://www.epa.gov/icr. The information requirements are not effective until OMB approves them. Section 112(j) of the Act as amended in 1990 requires a source to submit a permit application if EPA fails to promulgate a MACT standard for a category or subcategory of major sources on schedule. The permit application is used by the permitting agency to issue permits containing MACT emission limitations on a case-by-case (source-by-source) basis, equivalent to what would have been promulgated by EPA. The requirement to submit the permit application is not voluntary. Section 112(j) of the Act contains the need and authority for this information collection (42 U.S.C. 7401 *et seq.* as amended by Pub. L. 101–549).

Any information submitted to a permitting authority with a claim of confidentiality is to be safeguarded according to policies in 40 CFR chapter 1, part 2, Subpart B—Confidentiality of Business Information.

The total estimated burden, which includes all activities associated with the respondents or government agencies, is $1,323,000 and 46,339 hours. This collection of information has an estimated reporting burden of 171 hours per respondent and 140 hours per permitting agency. The permit application is a one time occurrence along with the issuance of the permit by the permitting agency. This estimated cost per respondent is $4,600 and $4,300 per permitting agency.

Burden means the total time, effort, or financial resources expended by persons to generate, maintain, retain, or disclose or provide information to or for a Federal agency. This includes the time needed to review instructions; develop, acquire, install, and utilize technology and systems for the purposes of collecting, validating, and verifying information, processing and maintaining information, and disclosing and providing information; adjust the existing ways to comply with any previously applicable instructions and requirements; train personnel to be able to respond to a collection of information; search data sources; complete and review the collection of information; and transmit or otherwise disclose the information.

An agency may not conduct or sponsor, and a person is not required to respond to a collection of information unless it displays a currently valid OMB control number. The OMB control numbers for EPA's regulations are listed in 40 CFR part 9 and 48 CFR chapter 15.

C. Analysis Under E.O. 12866, the Unfunded Mandates Reform Act of 1995, the Regulatory Flexibility Act, and the Small Business Regulatory Enforcement Fairness Act of 1996

Because the regulatory revisions that are the subject of today's notice would delay an existing requirement, this action is not a ''significant'' regulatory action within the meaning of Executive Order 12866, and does not impose any Federal mandate on State, local and tribal governments or the private sector within the meaning of the Unfunded Mandates Reform Act of 1995. Further, the EPA has determined that it is not necessary to prepare a regulatory flexibility analysis in connection with this action under the Regulatory Flexibility Act and the Small Business Regulatory Enforcement Fairness Act of 1996. The regulatory change proposed here is expected to reduce regulatory burdens on small businesses, and will not have a significant impact on a substantial number of small entities.

D. National Technology Transfer and Advancement Act

Under Section 12 of the National Technology Transfer and Advancement Act (NTTAA) of 1995, the EPA must consider the use of ''voluntary consensus standards,'' if available and applicable, when implementing policies and programs, unless it would be ''inconsistent with applicable law or otherwise impractical.'' The intent of the NTTAA is to reduce the costs to the private and public sectors by requiring Federal agencies to draw upon any existing, suitable technical standards used in commerce or industry.

A ''voluntary consensus standard'' is a technical standard developed or adopted by a legitimate standards-developing organization. The Act defines ''technical standards'' as ''performance-based or design-specific technical specifications and related management systems practices.'' A legitimate standards-developing organization must produce standards by consensus and observe principles of due

process, openness, and balance of interests. Examples of organizations that are regarded as legitimate standards-developing organizations include the American Society for Testing and Materials (ASTM), International Organization for Standardization (ISO), International Electrotechnical Commission (IEC), American Petroleum Institute (API), National Fire Protection Association (NFPA) and Society of Automotive Engineers (SAE).

Since today's action does not involve the establishment or modification of technical standards, the requirements of the NTTAA do not apply.

E. Executive Order 13045—Protection of Children From Environmental Health Risks and Safety Risks

Executive Order 13045, entitled Protection of Children from Environmental Health Risks and Safety Risks (62 FR 19885, April 23, 1997), applies to any rule that (1) OMB determines is ''economically significant'' as defined under Executive Order 12866, and (2) EPA determines the environmental health or safety risk addressed by the rule has a disproportionate effect on children. If the regulatory action meets both criteria, the Agency must evaluate the environmental health or safety aspects of the planned rule on children, and explain why the planned regulation is preferable to other potentially effective and reasonably feasible alternatives considered by the Agency.

These regulatory revisions are not subject to the Executive Order because it is not economically significant as defined in E.O. 12866, and because the Agency does not have reason to believe the environmental health or safety risks addressed by this action present a disproportionate risk to children.

F. Executive Order 13084—Consultation and Coordination with Indian Tribal Governments

Under Executive Order 13084, EPA may not issue a regulation that is not required by statute, that significantly or uniquely affects the communities of Indian tribal governments, and that imposes substantial direct compliance costs on those communities, unless the Federal government provides the funds necessary to pay the direct compliance costs incurred by the tribal governments, or EPA consults with those governments. If EPA complies by consulting, Executive Order 13084 requires EPA to provide to OMB, in a separately identified section of the preamble to the rule, a description of the extent of EPA's prior consultation with representatives of affected tribal governments, a summary of the nature of their concerns, and a statement supporting the need to issue the regulation. In addition, Executive Order 13084 requires EPA to develop an effective process permitting elected officials and other representatives of Indian tribal governments ''to provide meaningful and timely input in the development of regulatory policies on matters that significantly or uniquely affect their communities.''

Today's rule does not significantly or uniquely affect the communities of Indian tribal governments. These rule revisions impose no enforceable duties on these entities. Rather, these rule revisions reduce burdens associated with certain regulatory requirements. Accordingly, the requirements of section 3(b) of Executive Order 13084 do not apply to this rule.

G. Executive Order 12875: Enhancing the Intergovernmental Partnership

Under Executive Order 12875, EPA may not issue a regulation that is not required by statute and that creates a mandate upon a State, local or tribal government, unless the Federal government provides the funds necessary to pay the direct compliance costs incurred by those governments, or EPA consults with those governments. If EPA complies by consulting, Executive Order 12875 requires EPA to provide to OMB a description of the extent of EPA's prior consultation with representatives of affected State, local and tribal governments, the nature of their concerns, copies of any written communications from the governments, and a statement supporting the need to issue the regulation. In addition, Executive Order 12875 requires EPA to develop an effective process permitting elected officials and other representatives of State, local and tribal governments to provide meaningful and timely input in the development of regulatory proposals containing significant unfunded mandates.

Today's rule revisions do not create a mandate on State, local or tribal governments. The rule revisions do not impose any enforceable duties on these entities. Rather, the rule revisions reduce burden for certain regulatory requirements. Accordingly, the requirements of section 1(a) of Executive Order 12875 do not apply to this rule.

H. Submission to Congress and the Comptroller General

The Congressional Review Act, 5 U.S.C. 801 *et seq.*, as added by the Small Business Regulatory Enforcement Fairness Act of 1996, generally provides that before a rule may take effect, the agency promulgating the rule must submit a rule report, which includes a copy of the rule, to each House of the Congress and to the Comptroller General of the United States. The EPA previously submitted a report containing the withdrawn direct final rule, and will also submit a report containing this rule and other required information, to the U.S. Senate, the U.S. House of Representatives, and the Comptroller General of the United States prior to publication of the rule in the **Federal Register**. This action is not a ''major rule'' as defined by 5 U.S.C. 804(2).

List of Subjects for 40 CFR Part 63

Environmental protection, Administrative practices and procedures, Air pollution control, Hazardous substances, Intergovernmental relations, Reporting and recordkeeping requirements.

Dated: May 10, 1999.

Carol M. Browner,

Administrator.

For the reasons set out in the preamble, 40 CFR part 63 is amended as follows:

PART 63—[AMENDED]

1. The authority citation for part 63 continues to read as follows:

Authority: 42 U.S.C. 7401 *et seq.*

2. In § 63.51, the definition of *Section 112(j) deadline* is revised to read as follows:

§ 63.51 Definitions.

* * * * *

Section 112(j) deadline means the date 18 months after the date by which a relevant standard is scheduled to be promulgated under this part, except that for all major sources listed in the source category schedule for which a relevant standard is scheduled to be promulgated by November 15, 1994, the section 112(j) deadline is November 15, 1996, and for all major sources listed in the source category schedule for which a relevant standard is scheduled to be promulgated by November 15, 1997, the section 112(j) deadline is December 15, 1999.

* * * * *

[FR Doc. 99–12243 Filed 5–13–99; 8:45 am]

BILLING CODE 6560–50–P

ENVIRONMENTAL PROTECTION AGENCY

40 CFR Parts 136 and 260

[FRL–6341–9]

RIN 2040–AC63

Guidelines Establishing Test Procedures for the Analysis of Oil and Grease and Non-Polar Material Under the Clean Water Act and Resource Conservation and Recovery Act; Final Rule

AGENCY: Environmental Protection Agency (EPA).

ACTION: Final rule.

SUMMARY: This action approves use of EPA Method 1664, Revision A: N-Hexane Extractable Material (HEM; Oil and Grease) and Silica Gel Treated N-Hexane Extractable Material (SGT-HEM; Non-polar Material) by Extraction and Gravimetry (hereafter Method 1664) for use in EPA's Clean Water Act (CWA) programs. This action also deletes Method 9070, adds revised Method 9071B, and incorporates Method 1664 by reference for use in EPA's Resource Conservation and Recovery Act (RCRA) programs. Method 1664 is also approved for determination of non-polar material (NPM) as silica gel treated n-hexane extractable material (SGT-HEM) to support phaseout of use of CFC–113 for determination of NPM in EPA's CWA and RCRA programs.

These actions are being taken as a part of EPA's effort to reduce dependency on use of chlorofluorocarbons (CFCs) to protect Earth's ozone layer and to meet the CFC phaseout agreed to in the Montreal Protocol and required by the Clean Air Act Amendments of 1990. Method 1664 uses normal hexane (n-hexane) as the extraction solvent in place of 1,1,2-trichloro-1,2,2-trifluoroethane (CFC–113; Freon-113), a Class 1 CFC.

DATES: This regulation is effective June 14, 1999. For judicial review purposes, this final rule is promulgated as of 1:00 p.m. Eastern Standard Time on May 28, 1999 in accordance with 40 CFR 23.7.

The incorporation by reference of Method 1664 is approved by the Director of the Federal Register May 14, 1999.

ADDRESSES: Copies of the public comments received, EPA responses, and all other supporting documents (including references included in this notice) are available for review at the U.S. Environmental Protection Agency, Water Docket, 401 M Street SW, Washington, DC 20460. For access to docket materials, call 202–260–3027 on Monday through Friday, excluding Federal holidays, between 9:00 a.m. and 3:30 p.m. Eastern Time for an appointment.

Copies of Method 1664 are available from the National Technical Information Service (NTIS), 5285 Port Royal Road, Springfield, VA 22161, (703) 605–6000 or (800) 553–6847. The NTIS publication number is PB99–121949.

Copies of the Third Edition of SW–846 and Updates I, II, IIA, IIB, and III (document number 955–001–00000–1) are available from the Superintendent of Documents, U.S. Government Printing Office, Washington, DC 20402, (202) 512–1800. Update IIIA is available through EPA's Methods Information Communication Exchange (MICE) Service. MICE can be contacted by phone at (703) 821–4690. Update IIIA can also be obtained by contacting the U.S. Environmental Protection Agency, Office of Solid Waste (5307W), OSW Methods Team, 401 M Street, SW, Washington, DC, 20460. Copies of the Third Edition and all of its updates are also available from the National Technical Information Service (NTIS), 5285 Port Royal Road, Springfield, VA 22161, (703) 605–6000 or (800) 553–6847. In addition, a CD-ROM version of SW–846, Third Edition, as amended by Updates I through III is available from NTIS (PB97–501928). In the future, the CD-ROM will be updated by NTIS to include additional updates, including Update IIIA.

An electronic version of Method 1664 and Method 9071B are also available via the Internet at http://www.epa.gov/OST.

FOR FURTHER INFORMATION CONTACT: For information regarding Method 1664 and its use in Clean Water Act programs, contact Maria Gomez-Taylor, Engineering and Analysis Division (4303), USEPA Office of Science and Technology, 401 M Street, SW, Washington, DC 20460, or call (202) 260–1639. For information regarding Update IIIA and the use of Method 1664 in the Resource Conservation And Recovery Act programs, contact Gail Hansen, Office of Solid Waste (5307W), USEPA, 401 M Street, SW, Washington, DC 20460, or call (703) 308–8855.

SUPPLEMENTARY INFORMATION:

Potentially Regulated Entities

EPA Regions, as well as States, Territories and Tribes authorized to implement the National Pollutant Discharge Elimination System (NPDES) program, issue permits that comply with the technology-based and water quality-based requirements of the Clean Water Act. In doing so, the NPDES permitting authority, including authorized States, Territories, and Tribes, make a number of discretionary choices associated with permit writing, including the selection of pollutants to be measured and, in many cases, limited in permits. If EPA has ''approved'' standardized testing procedures (i.e., promulgated through rulemaking) for a given pollutant, the NPDES permit must include one of the approved testing procedures or an approved alternate test procedure. Therefore, entities with NPDES permits could be affected by the standardization of testing procedures in this rulemaking. These entities may be affected because NPDES permits may incorporate the standardized testing procedure approved for use in today's rulemaking. In addition, when a State, Territory, or authorized Tribe provides certification of federal licenses under Clean Water Act section 401, States, Territories and Tribes are directed to use the standardized testing procedures. Under the RCRA program, this method may be required as part of a hazardous waste delisting petition. Categories and entities that may ultimately be affected include:

Category	Examples of potentially regulated entities
Regional, State and Territorial Governments and Indian Tribes.	States, Territories, and Tribes authorized to administer the NPDES permitting program; States, Territories, and Tribes providing certification under Clean Water Act section 401; Governmental NPDES permittees; Regional and State offices implementing delisting petitions.
Industry	Industrial NPDES permittees; delisting petitioners.
Municipalities.	Publicly-owned treatment works with NPDES permits.

This table is not intended to be exhaustive, but rather provides a guide for readers regarding entities likely to be affected by this action. This table lists the types of entities that EPA is now aware could potentially be affected by this action. Other types of entities not listed in the table could also be affected. If you have questions regarding the applicability of this action to a particular entity, consult the person listed in the preceding **FOR FURTHER INFORMATION CONTACT** section.

Outline of Preamble

I. Authorities
A. Clean Water Act
B. Resource Conservation and Recovery Act
C. Clean Air Act Amendments of 1990
II. Background and History

A. Regulatory Background
B. Data Gathering
1. EPA's Freon Replacement Studies
2. Water Pollution Performance Evaluation Data
3. Data Received from Commenters
III. Explanation of Today's Action
A. Application of Method 1664 in Clean Water Act Program
1. General Use
2. Search for Other Uses of CFCs in Clean Water Act Program
B. Application of Method 1664 in Resource Conservation and Recovery Act Program
C. Use of Solid-phase Extraction (SPE)
D. Differences in Results Produced by CFC–113 and n-Hexane and Determinations of Compliance
IV. Timing of Required Use of Method 1664 and Phaseout of Use of CFC–113
V. Improvements and Changes to Method 1664 Since Proposal
A. Names and Name Changes
1. Oil and Grease
2. Non-polar Material
B. Other Changes and Improvements
1. Changes to Quality Control
2. Miscellaneous Changes and Improvements
VI. Public Participation and Response to Comments
A. Regulatory Issues
B. Health and Safety Concerns
C. Economic Concerns
D. Solid-phase Extraction (SPE)
1. Comments Supporting Use of SPE
2. Comments Expressing Concern About the Use of SPE
E. Grace period for CFC–113
F. Use of Silica-gel Treated n-Hexane Extractable Material Procedure
G. Detection and Quantitation
H. Matrix Effects
I. Method Modifications
J. Matrix Spike/Matrix Spike Duplicate
K. Precision and Recovery
L. Differences in Results Produced by *n*-Hexane and CFC–113
M. Method Validation and QC Acceptance Criteria
N. Quality Control
O. Sample Collection and Preservation
P. Miscellaneous Issues
VII. Regulatory Requirements
A. Executive Order 12866
B. Unfunded Mandates Reform Act
C. Regulatory Flexibility Act
D. Paperwork Reduction Act
E. Submission to Congress and the General Accounting Office
F. National Technology Transfer and Advancement Act
G. Executive Order 13045
H. Executive Order 12805
I. Executive Order 13084

I. Authorities

A. Clean Water Act

These regulations are being promulgated under the authority of sections 301, 304, and 501(a) of the Clean Water Act (CWA), 33 U.S.C. 1311, 1314(h), 1361(a).

B. Resource Conservation and Recovery Act

These regulations are being promulgated under the authority of sections 1006, 2002(a), 3001–3007, 3010, 3013–3018, and 7004 of the Solid Waste Disposal Act (SWDA), as amended by the Resource Conservation and Recovery Act of 1976 (RCRA), as amended (42 U.S.C. 6905, 6912(a), 6921–6927, 6930, 6934–6930, and 6974).

C. Clean Air Act Amendments of 1990

These regulations are consistent with intent of sections 604, 606, and 608 of the 1990 Clean Air Act Amendments (CAAA) to phase out production of Class I CFCs and reduce use and emissions of Class I CFCs to the lowest achievable level, and with section 613 of CAAA to reduce the Federal procurement of products and services that employ CFCs.

II. Background and History

A. Regulatory Background

This final rule affects regulations implementing analytical methods under the Clean Water Act and the Resource Conservation and Recovery Act. This final rule supports, in part, EPA's Stratospheric Ozone Protection Program in the Office of Air and Radiation (OAR). The regulatory background for each of these programs is not given in detail in this rule; rather, pertinent proposals and rules are referenced, as follows:

EPA provided a history of analytical methods under 40 CFR part 136 on February 7, 1991 (56 FR 5090) in the proposal of EPA Method 1613. The Agency presented a brief background on the use of analytical methods as support for effluent limitations, permit applications, and compliance monitoring, and a brief description of the alternate test procedure program (ATP) in the proposal of several new 40 CFR part 136 methods on October 18, 1995 (60 FR 53988). The details of Method 1664 and issues surrounding its use were given at proposal on January 23, 1996 (61 FR 1730).

The EPA Office of Solid Waste gave a brief description of the regulatory framework for SW–846 methods in a final rule promulgating the third update to the SW–846 methods on June 13, 1997 (62 FR 32452). Method 1664 is approved as ''guidance'' under the RCRA programs (see Section III.B.). Other methods may be used under the conditions stated in the RCRA regulations (see 40 CFR part 268).

The regulatory background for development of effluent guidelines and standards is given in proposed and final rules for these guidelines and standards. See, for example, Section III of the final rule for the Coastal Subcategory of Oil and Gas Extraction promulgated on December 16, 1996 (61 FR 66086).

The background and history of applicability of EPA's Stratospheric Ozone Protection Program to analytical methods requiring use of CFCs in EPA's CWA programs was given in a proposal for an earlier EPA method for determination of oil and grease on July 3, 1991 (56 FR 30519). The Montreal Protocol and Section 604 of the Clean Air Act Amendments of 1990 impose limits on the production and consumption of certain ozone-depleting substances including CFC–113 (see 40 CFR part 82).

B. Data Gathering

Data gathered to support today's final rule were Freon replacement studies and other data gathered prior to proposal, data collected in EPA's Water Pollution (WP) Performance Evaluation (PE) Study 038, and data received from commenters.

1. EPA's Freon Replacement Studies

EPA summarized details of EPA studies that support today's final rule at proposal (see 61 FR 1730) and presented information in reports of EPA's Phase I Freon Replacement Study (EPA–821–R–93–011), Phase II Freon Replacement Study (EPA–820–R–95–003), and Method Validation Study (821–R–95–036). These reports are included in the Water Docket for the proposed rule.

2. Water Pollution Performance Evaluation Data

EPA has collected data on the performance of laboratories conducting routine analyses of wastewaters through water pollution performance evaluation (PE) studies. For water pollution PE study 038 conducted in late calendar year 1997, EPA accepted data from laboratories determining oil and grease using either CFC–113 or n-hexane. The results of this study are summarized in Table 1 and show that, for this study, CFC–113 and n-hexane extracted identical average amounts of oil and grease.

TABLE 1.—RESULTS OF PERFORMANCE EVALUATION STUDY 038 FOR DETERMINATION OF OIL AND GREASE

Solvent	Number of samples	Mean (mg/L)	Standard deviation
CFC–113	1,101	11.4	2.1
n-hexane	353	11.4	2.4

3. Data Received From Commenters

As detailed in other sections of this preamble and in the detailed comments and responses included in the Docket, EPA utilized data submitted in response to the proposal of Method 1664 for improvements included in the version of Method 1664 being approved for use today. All comments are included in the Water Docket.

III. Explanation of Today's Action

Today's final rule approves Method 1664 determination of n-hexane extractable material (HEM; oil and grease) and silica-gel treated n-hexane extractable material (SGT–HEM; non-polar material) in EPA's CWA and RCRA programs. Today's action has an economic benefit to regulated entities measuring oil and grease and non-polar material (NPM) in that the cost of CFC–113 is considerably greater than the cost of n-hexane as a result of the production phase-out of CFCs and increased tariffs on their use. The costs for CFCs being phased out can be expected to rise as production ceases and tariffs increase further. Because n-hexane is a product of oil refining on a large scale, the impact of the additional demand for n-hexane is expected to be insignificant. As pointed out by commenters, however, laboratory use of CFC–113 was small in comparison to other uses. Indeed, many commenters claimed that because of safety problems and the disparity in results produced by use of CFC–113 vs. n-hexane, use of CFC–113 should be continued indefinitely. Based on these comments and an extension of the laboratory use exemption to 2005, EPA has decided to allow continued use of methods that use CFC–113 and to approve use of Method 1664 for those regulated entities that desire to switch to use of n-hexane.

A. Application of Method 1664 in EPA's Clean Water Act Programs

1. General Use

Method 1664 will be used in EPA's wastewater program for regulation development, permit applications, and compliance monitoring. More than 600 industrial subcategories are regulated under Clean Water Act pollution control programs (see the rules for these industrial subcategories at 40 CFR parts 400–510). Nearly all of these regulations contain nationwide effluent guidelines and standards limiting the amount of oil and grease that may be discharged from facilities in these subcategories. EPA estimates that more that 10,000 National Pollutant Discharge Elimination System (NPDES) permits contain a limit for oil and grease, potentially necessitating an estimated minimum of 25,000 measurements annually.

2. Search for Other Uses of CFCs in Clean Water Act Program

EPA performed computerized string searches of 40 CFR parts 100–149, and of Subchapter N, ''Effluent Guidelines and Standards,'' at 40 CFR parts 400–500 for ''TPH'', ''Freon-113'', ''CFC–113'', ''chlorofluoro'', ''413.1'', and related terms in an attempt to locate references to CFC–113 and Method 413.1 for determination of oil and grease. EPA could find no references other than in 40 CFR part 136 and to the procedure for petroleum hydrocarbons in the Coil Coating standards at 40 CFR 465.03(c). EPA intends to consider allowing use of Method 1664 through subsequent rulemaking for the Coil Coating Point Source Category.

B. Application of Method 1664 in Resource Conservation and Recovery Act Program

Analytical methods found acceptable for testing under Subtitle C of RCRA are contained in OSW publication SW–846, Test Methods for Evaluating Solid Waste, Physical/Chemical Methods. Use of some of these methods is required by some of the hazardous waste regulations under Subtitle C of RCRA. In other situations, SW–846 functions as a guidance document setting forth acceptable, although not required, methods to be implemented by the user, as appropriate, in satisfying RCRA-related sampling and analysis requirements. As of Update III to SW–846, the two SW–846 methods for determination of oil and grease have been Method 9070 for waters and aqueous wastes, and Method 9071A for solid and semi-solid material such as soil, sediment, and sludge. Method 9070 is virtually identical to presently approved CWA methods for determination of oil and grease. Method 9071A employs drying of the sample with magnesium sulfate and Soxhlet extraction with CFC–113 for the determination. These methods are not specifically required by any RCRA regulation, although they can be required as part of a hazardous waste de-listing demonstration.

In today's final rule, SW–846 is being amended further to delete Method 9070 and to include revised Method 9071B as Update IIIA. Specifically, Method 9071B addresses the use of n-hexane instead of CFC–113 as the extraction solvent, in a manner consistent with the use of n-hexane in Method 1664. In addition, in place of Method 9070, which uses CFC–113 as the extraction solvent in the testing of waters and aqueous wastes, the Agency is incorporating by reference Method 1664 in the RCRA regulations. As part of Update IIIA, SW–846 refers the regulated community to Method 1664 for testing previously conducted using Method 9070.

EPA compared results of Soxhlet extraction of solids and sludges with various solvents, including CFC–113 and n-hexane, in the Phase I Freon Replacement Study (EPA–821–R–93–011). Results of this study showed that, as with testing of waters which was described in the Phase I study report that was included in the Docket at proposal, CFC–113 and n-hexane extract different amounts of material. However, for petroleum-based samples, the amount of material extracted by CFC–113 and n-hexane was not significantly different. This is the same conclusion that was reached regarding extraction of waters. As a result, and for the other reasons allowing use of Method 1664 detailed at proposal and in other sections of this preamble as supported by the information contained in the Water Docket, EPA believes that changes to SW–846 as a result of Update IIIA, i.e., the use of Method 1664 in place of Method 9070 and the addition of Method 9071B to SW–846, are appropriate and logical outgrowths of the Agency's efforts to reduce dependency on the use of CFCs.

C. Use of Solid-Phase Extraction (SPE)

SPE uses a cartridge or disk for removal of the oil and grease from the sample. A detailed description of the SPE technique was provided at proposal (61 FR 1730). Even prior to proposal of Method 1664, vendors of SPE devices had requested that SPE be an allowed technique in the Method. Proposed Method 1664 allowed use of SPE, but required a demonstration that SPE produced results equivalent to results produced by the separatory funnel liquid-liquid extraction technique (LLE) written in Method 1664. Vendors and other commenters objected to this requirement, claiming that SPE provided sufficient advantages in solvent reduction, reduced analysis time, reduced emulsion formation, and other advantages so that its use should be allowed without prior demonstration of equivalency. EPA discussed the issue extensively at proposal and in public workshops and meetings, and specifically solicited data demonstrating equivalency of results produced by SPE and LLE. Data received were mixed, with some data demonstrating that results produced are equivalent and other data demonstrating that results produced are significantly different. EPA reopened the comment period (61

FR 26149) to allow submission of further data, and EPA provided a notice of availability (62 FR 51621) of these and other data so that EPA could consider these data for today's final rule.

Discussions of the detailed issues on SPE are summarized in Section VI of this preamble and given in the detailed comments and responses included in the Docket. Based on comments received and supporting data, EPA is allowing the use of SPE in the version of Method 1664 being approved today without a prior demonstration of equivalency. However, EPA has added a note at the beginning of the extraction procedure (Section 11.3) in Method 1664 to indicate that it is the discharger/generator's responsibility to assure that the results produced are equivalent. If there is doubt about this equivalency, liquid/liquid extraction is definitive for the measurement.

EPA also acknowledges that if a Region, State, or other permitting authority has concerns about the difference in results produced by SPE and LLE, that authority may specify in the permit the use of one of the two techniques.

D. Differences in Results Produced by CFC–113 and n-Hexane and Determinations of Compliance

Since EPA announced results of the Phase I Freon Replacement Study in 1993, several commenters expressed concerns about the impact of differences resulting from substitution of CFC–113 with *n*-hexane on determinations of compliance under the NPDES program and pretreatment programs. EPA discussed this issue at proposal (61 FR 1730; January 23, 1996), and discussed the issue in workshops, conferences, and seminars between proposal and development of today's final rule.

After proposal, EPA received numerous requests from States and EPA Regions for guidance on implementation of Method 1664. On July 9, 1996, EPA issued guidance to Pretreatment Coordinators and Regional NPDES Contacts. A copy of the memorandum is included in the Docket for today's final rule. In part, this memorandum states the following:

''EPA acknowledges that, due to the diverse nature of discharges, there may be instances in which *n*-hexane will extract an amount of oil and grease greater or less than the amount extracted by Freon-113. If these instances affect compliance, the permitting authority may wish to consider establishing a conversion factor, multiplier, or divisor to account for these differences in the permit. EPA emphasizes that few, if any, instances will likely be found in which the differences affect compliance and, therefore, urges direct substitution of the presently approved methods with Method 1664 when the date of substitution is announced in the Federal Register.''

By today's final rule, EPA still believes that the approach outlined in the memorandum appropriately accommodates any significant discrepancies that could arise in determining compliance with limitations or standards for oil and grease using the new method. Based on the results from the Freon Replacement Studies, EPA found that, on average, *n*-hexane extracted approximately 96% of the material extracted using CFC–113. Therefore, while there may be some effluent matrices where *n*-hexane will extract more material than CFC–113, on the whole, most dischargers would have little risk of a determination of non-compliance with existing limits. The slightly smaller amount of oil and grease extracted by *n*-hexane (96% versus 100% by CFC–113) is not statistically significant because errors in oil and grease measurement are in the order of 10 percent relative standard deviation. A coarse estimate of 95% confidence limits around the 96% recovery by *n*-hexane is 96 plus or minus 20%, or the true difference lies somewhere between 76–116%. This encompasses 100% or no difference. Given the lack of significance of the 4% difference, the measurement error that would be encountered in the side-by-side comparison (estimated at 10% for each measurement), the potentially significant cost of a side-by-side comparison with each discharge and the low anticipated likelihood that a significant difference would be found (based on EPA's studies), EPA does not recommend a side-by-side comparison for each discharge. Instead, EPA continues to recommend a direct replacement of the approved Freon methods with Method 1664.

However, to accommodate regulated entities concerned about differences produced, EPA is not withdrawing approved use of methods employing CFC–113, a Class I ozone depleting substance. If a discharger/industrial user has concerns about measuring oil and grease, the discharger/industrial user may choose to perform a side-by-side comparison of Method 1664 and any of the approved methods that it previously used to measure compliance with the limitation or standard for oil and grease. For the side-by-side comparison, EPA suggests, at a minimum, analysis of three replicates of each sample by each method on any seven days over a minimum 30-day period, for a total of 42 analyses (21 by the previously used method and 21 by Method 1664). For this side-by-side comparison the laboratory should use the LLE procedure (not the optional SPE procedure) in Method 1664 because of the possible confounding of results that could occur when two variables (SPE and the solvent) are changed simultaneously. EPA suggests that all six results associated with any result less than the minimum level (<ML) not be used in the comparison because it is desirable to have actual measured values to test equivalency of results using the different methods. In the event that a test result less than the ML is obtained, the number of tests should be increased to provide a minimum of seven paired triplicate results for the comparison.

Statistical significance should be tested according to procedures for development of the root-mean-square deviation (RMSD) detailed in EPA's Freon Replacement Study reports using results obtained with CFC–113 as the reference. If the RMSD is within the acceptance limit, the results obtained using the different methods are equivalent.

IV. Timing of Required Use of Method 1664 and Phaseout of Use of CFC–113

EPA proposed to withdraw approved use of previously approved methods and require use of Method 1664 on a date exactly six months after the date of publication of a final rule. This time lag was to allow for existing supplies of CFC–113 to be used, for laboratories to become familiar with Method 1664, and for dischargers/generators/industrial users and regulatory authorities to determine if a conversion factor based on a difference in the amount of material extracted is appropriate. Commenters suggested alternate dates for withdrawal, ranging between ''immediate withdrawal of presently approved methods'' and ''continue use of CFC–113 methods indefinitely'' (see Section VI below and the detailed comments and responses in the Docket for today's final rule). To accommodate regulated entities' concern that the requirement to change from CFC-based methods to Method 1664 could result in non-compliance, and based on an extension of the time for laboratory use of CFC–113 to 2005, EPA has decided to approve use of Method 1664 but not withdraw approved use of the CFC-based methods.

EPA strongly encourages dischargers/generators/industrial users to substitute use of Method 1664 beginning on the effective date of today's rulemaking rather than awaiting reissuance of the existing permit that currently requires

use of a CFC–113 method. Also, instead of awaiting permit reissuance, EPA encourages prompt modification of the existing permit to specify the use of Method 1664. To accommodate those permittees wishing to use Method 1664 once today's rule becomes effective and to expedite reduction in CFC–113 use, EPA will exercise enforcement discretion with respect to the method used for compliance. This enforcement discretion does not extend, however, to liability for any violation of a permit limitation or condition, including the oil and grease limitation, only to a requirement to use a CFC–113 method to determine compliance or non-compliance. If non-compliance results from the use Method 1664, the permitting authority may establish a conversion factor, as detailed earlier in this preamble.

V. Improvements and Changes to Method 1664 Since Proposal

The Agency has revised Method 1664 (''Method 1664, Revision A'') to indicate that it is different from previous versions. The significant changes resulting in this revision are the change of name from ''total petroleum hydrocarbons'' to ''non-polar material,'' the change of the status of the matrix spike duplicate (MSD) from a requirement to a suggestion, the change of an analytical batch to a maximum of 20 samples, and the allowed use of solid-phase extraction (SPE) without a demonstration of equivalency.

A. Names and Name Changes

Confusion of the names used for the analytes determined by Method 1664 prompted EPA to examine these names. As a result, the name ''*n*-hexane extractable material'' (HEM) has been retained to be synonymous with ''oil and grease,'' but the name ''total petroleum hydrocarbons (TPH)'' has been dropped in favor of ''non-polar material'' (NPM) to indicate ''silica-gel treated *n*-hexane extractable material'' (SGT–HEM), as detailed below.

1. Oil and Grease′

The EPA Administrator designated ''oil and grease'' as a conventional pollutant under the Clean Water Act (see 40 CFR 401.16). Oil and grease consists of those chemical substances extracted from water or wastes using a solvent. The nature of the substances extracted are determined by the extracting solvent and the extraction technique. Both CFC–113 and n-hexane extract many pure materials at nearly 100 percent efficiency. When mixtures of substances that typically occur in complex wastewater discharges and in complex solid and semi-solid wastes are present, the two solvents may extract different amounts of material. For most wastes and wastewaters, materials commonly extracted are relatively non-volatile hydrocarbons, vegetable oils, animal fats, waxes, soaps, greases, and related materials. Because the nature and amount of material extracted is defined by the solvent and, to a lesser degree, by the details of the procedure used for extraction, EPA uses the term ''method-defined analyte'' to identify oil and grease.

Today's final rule approves use of Revision A of EPA Method 1664: n-Hexane Extractable Material (HEM; Oil and Grease) and Silica-gel Treated n-Hexane Extractable Material (SGT–HEM; Non-polar Material) by Extraction and Gravimetry, in which n-hexane is used as the extracting solvent, in addition to currently approved methods in which CFC–113 is used as the extracting solvent. The name ''n-hexane extractable material'' (HEM) reflects that it is the material extracted by normal hexane (n-hexane) that is being measured using Method 1664. The common name ''oil and grease'' is being retained because of its familiarity to the analytical community.

2. Non-Polar Material

At proposal, EPA used the term ''total petroleum hydrocarbons'' (TPH) to designate the substances that remain after n-hexane extractable material is exposed to silica gel. Use of the term ''total petroleum hydrocarbons'' and the abbreviation TPH was confusing to the analytical community because the term is used in other analytical methods that measure a different property or material, in some instances by a different analytical technique. For example, EPA Method 418.1 and Standard Method 5520 F measure polar materials termed ''petroleum hydrocarbons'' using infrared spectroscopy, and certain SW–846 and State methods measure TPH by gas chromatography. The term ''non-polar material'' (NPM) was chosen for use in today's version of Method 1664 to avoid confusion with these uses of the term TPH.

Silica gel has the property that it removes ''polar'' material. Polar material includes aromatic compounds (those containing one or more benzene rings), unsaturated compounds (those containing one or more double bonds), and compounds containing atoms other than carbon and hydrogen (e.g., chlorine, oxygen, nitrogen, sulfur), and other compounds. Polar material also includes aromatic, phenolic, and heterocyclic compounds in petroleum and petroleum products, soaps, and animal fats. Silica gel adsorbs these polar materials, so the material that remains is ''non-polar material.'' Non-polar material contains straight and branched chain hydrocarbons (aliphatic hydrocarbons) and other chemical substances in which there are either no mixture of atoms of different types (hetero-atoms; e.g., chlorine, oxygen, nitrogen, sulfur) or these mixtures are ''balanced'' in the molecule. For example, the pollutant hexachloroethane, although containing chlorine atoms, does not exhibit sufficient polarity to be adsorbed by silica gel. As with HEM, the exact nature and amount of substances that will be adsorbed by silica gel is defined by the adsorption process. Therefore, as with oil and grease (HEM), SGT–HEM (NPM) is a ''method-defined analyte.''

B. Other Changes and Improvements

1. Changes to Quality Control (QC)

EPA has made two changes to the QC in Method 1664 in response to comments that the QC was onerous to laboratories: (1) the requirement for a matrix spike duplicate (MSD) has been changed to a suggestion; and (2) the size of an analytical batch has been increased to a maximum of 20 samples. This QC is consistent with the QC in methods for use under the CWA that are published at 40 CFR part 136, Appendix A. These methods use a single matrix spike (termed a ''QC check sample'' in those methods) to evaluate matrix effects and require matrix spikes at a minimum frequency of five percent (1 in 20) of samples from a given discharge/waste stream. The on-going precision and recovery (OPR) sample and blank are also at a minimum frequency of five percent (1 in 20). For those laboratories wishing to evaluate precision with each analytical batch, an MSD is suggested but not required.

2. Miscellaneous Changes and Improvements

Nearly all of the other improvements to Method 1664 are minor technical improvements that correct or clarify language in the Method. Most improvements were incorporated in response to a comment or comments. EPA refers readers to the comments and responses detailed in the Docket for additional information. EPA believes that none of these changes or improvements or the other changes and improvements warrant re-proposal of Method 1664. Miscellaneous changes and improvements include:

- The hexadecane/stearic acid standard solution has been diluted by a factor of 2 and twice as much standard

is spiked to avoid reported precipitation problems with this standard.

- Instructions have been amplified to rinse all glassware surfaces with solvent after transfer of sample or standards from one container to another to avoid reported problems that sample and standards cannot be recovered quantitatively.
- Performance data from EPA's validation study have been added to Section 13.
- A procedure was added for drying the sample to constant weight. The procedure was provided by the American Petroleum Institute.
- The section on safety was expanded to address in greater detail personnel monitoring and the hazards of handling n-hexane.
- A requirement was added that certain pieces of equipment such as the hot plate, centrifuge, and fume hood be specified as explosion proof.
- The QC acceptance criteria have been widened based on EPA's validation study.
- A procedure for collecting four grab samples over the course of a day for laboratory compositing was added.
- The term ''discharge'' was defined to be consistent with the words ''discharge'' and ''matrix type'' in EPA's Streamlining Initiative proposed on March 28, 1997 (62 FR 14976).
- A suggestion for back-extraction was added to aid in removal of salt from extracts of produced water samples to address concerns expressed by the American Petroleum Institute.
- References to the solvent removal process were changed from ''evaporation'' to ''distillation'' to indicate that the process recovers the solvent. Similarly, the word ''waste'' was changed to ''distillate'' to preclude indications that the distillate may be hazardous waste.
- Use of a greater amount of silica gel is now allowed so that greater amounts of polar material can be adsorbed in the SGT–HEM procedure, and the ratio of amount of silica gel to the amount HEM has been clarified.
- The top-loading analytical balance and centrifuge are made optional because they may not be needed.
- A limit has been placed on the amount of spiking solution that may be added to a sample for the matrix spike and matrix spike duplicate. The purpose of adding this limit is to preclude adding large amounts of acetone to the sample, thus possibly allowing the spiking material to be dissolved in the aqueous phase and not recovered in the extraction.

VI. Public Participation and Response to Comments

The Agency proposed Method 1664 for use on January 23, 1996 (61 FR 1730). The comment period at proposal closed on March 25, 1996. On May 24, 1996 (61 FR 26149), EPA reopened the comment period for the purpose of accepting additional data and inviting comments. The reopened comment period closed on July 23, 1996. EPA continued to receive data and comments after the close of the reopened comment period. Because EPA desired to use some of these data to support the information and decisions in today's final rule, EPA issued a notice of data availability and request for comment on October 2, 1997 (62 FR 51621). The comment period on the notice closed on November 3, 1997.

In the proposal and for the reopened comment period, EPA solicited data comparing various extraction solvents, data comparing use of SPE with the LLE procedures in Method 1664, and comments on the other operational aspects of Method 1664. EPA is pleased with the content and nature of the comments received. Many contained analytical data and/or constructive comments for improvement of the Method. As a result, EPA has modified Method 1664, where appropriate, to respond to commenters' suggestions. Significant comments received are summarized below, along with EPA's response. To the extent practicable, the comments have been categorized by subject. Detailed comments and their accompanying responses are included in the Docket for today's final rule.

EPA thanks commenters for data and constructive suggestions and believes that the version of Method 1664 being promulgated today will provide reliable data for compliance monitoring.

A. Regulatory Issues

Comment: Oil and grease is not a viable parameter for National Pollutant Discharge Elimination System (NPDES) compliance and there is no objectivity in permitting with an empirically based method.

Response: Oil and grease is a conventional pollutant designated pursuant to section 304(a)(4) of the Federal Water Pollution Control Act (FWPCA) and codified at 40 CFR 401.16, and therefore must be monitored for NPDES compliance under an effluent guideline or when deemed appropriate by a regulatory authority.

Comment: As with Method 413.1, Method 1664 measures non-oil and grease substances such as surfactants, soaps, and emulsifiers that will unduly subject dischargers to continual permitting and compliance difficulties.

Response: EPA recognizes that it may be inappropriate to include certain substances in the determination of oil and grease. However, discharges of pollutants, including surfactants, soaps, emulsifiers, and other substances, is prohibited under the Clean Water Act unless in compliance with an NPDES permit. EPA has provided the SGT–HEM (NPM) procedure in Method 1664 to allow development of effluent guidelines and in permitting situations for those instances in which removal of these substances is appropriate, and to allow a regulatory authority to specify measurement of SGT–HEM for compliance monitoring.

B. Health and Safety Concerns

Comment: *n*-Hexane is a safety hazard compared to CFC–113. *n*-Hexane has a flash point of −23°C (−9 °F), has explosive limits in air in the range of 1.2–6.9 percent, and poses a serious fire risk when heated or exposed to flame. There are multiple ignition sources in a laboratory, including Bunsen burners and high temperature furnaces. Method 1664 should be performed in an explosion-proof hood.

Response: EPA agrees that *n*-hexane is comparatively more hazardous than CFC–113. Proposed EPA Method 1664 contained explicit precautions concerning the handling of *n*-hexane and the recommendation that material safety data sheets (MSDSs) be made available to laboratory personnel. EPA also included references to information on laboratory safety. EPA has expanded and re-emphasized these precautions in the version of Method 1664 being approved today.

Comment: EPA needs to modify Method 1664 to give information on the toxicity of *n*-hexane and on safety precautions required for safe handling and storage. *n*-Hexane is a known neurotoxin.

Response: EPA has expanded the section on safety and the health effects of *n*-hexane in the version of Method 1664 being approved for use in today's final rule.

C. Economic Concerns

Comment: Method 1664 is more complicated and more labor intensive, requires a greater analysis time, and will be more expensive to practice.

Response: EPA agrees that Method 1664 will require a somewhat longer analysis time because of the increase in time required for extraction, *n*-hexane evaporation, and QC. However, regulated entities and their laboratories will benefit from lower costs for the *n*-

hexane extraction solvent because CFC–113 is becoming difficult to obtain as well as expensive. EPA believes that any cost increases will be small and that the benefit outweighs the cost because it will reduce the use of ozone-depleting chlorofluorocarbons, thus protecting the Earth's ozone layer. Further, EPA is not withdrawing allowed use of methods that employ CFCs. If a regulated entity desires to continue use of a Freon-based method for economic reasons, the entity may continue to use that method.

Comment: Disadvantages of using *n*-hexane include: the lower density that causes *n*-hexane to float on the water sample making extraction more difficult and time consuming than with CFC–113 that sinks; the higher water solubility of *n*-hexane requiring more drying agent or use of phase-separation paper; the greater tendency to form emulsions than CFC–113; and the higher boiling point of *n*-hexane requiring an evaporation time longer than 30 minutes at 85 °C.

Response: EPA pointed out the disadvantages of the use of *n*-hexane, including some of the disadvantages above, when EPA Method 1664 was proposed. None of these disadvantages precludes *n*-hexane from being used as the extraction solvent in Method 1664. Indeed, and as pointed out by a commenter, *n*-hexane was used as the extraction solvent for oil and grease prior to the advent of CFC–113 in laboratories that were, undoubtedly, less well equipped to handle toxic and flammable substances. Tests performed to date using *n*-hexane in Method 1664 reveal that none of the disadvantages prevent use of this solvent. EPA agrees that the techniques in Method 1664 and the other methods that the Agency publishes must be performed carefully in order to ensure reliable results.

D. Solid-phase Extraction (SPE)

1. Comments Supporting Use of SPE

Comment: Many commenters stated that SPE should be a standard procedure in Method 1664. Some suggested that SPE should be the standard procedure and that LLE should be optional.

Response: EPA believes that LLE should remain the standard procedure because, except for a change necessitated by the change from CFC–113 to *n*-hexane, the procedures in Method 1664 are virtually identical to procedures in existing methods, the equipment used is the same, and because *n*-hexane with LLE produced results closest to results produced by CFC–113 in EPA's Freon replacement studies.

Comment: Method 1664, as proposed, requires a demonstration of equivalency of SPE and other method modifications on each and every discharge. This requirement is a barrier in the way of laboratories that receive samples from different sources and a barrier to use of innovative technologies on a national level. EPA should allow use of SPE and other modifications without this demonstration or should allow nationwide application to the matrices for which applicability has been demonstrated.

Response: EPA has allowed use of SPE without a required demonstration of equivalency in the version of Method 1664 approved today. However, EPA has added a note to Method 1664 that it is the discharger's responsibility to assure that results produced are equivalent. Nearly all permits were developed using LLE and CFC–113. Method 1664 allows the use of SPE. However, two things change when SPE is used: the solvent and the extraction technique. EPA is concerned that this double change may cause a discharger to violate a permit limit simply because the results obtained are not equivalent (i.e., SPE may produce different results). Therefore, if there is any doubt about SPE with *n*-hexane producing results significantly different from results produced by LLE with *n*-hexane, dischargers and laboratories should perform a side-by-side test to demonstrate that equivalent results are produced.

2. Comments Expressing Concerns about the Use of SPE

Comment: Results produced by SPE and LLE are not equivalent. Comparisons of results produced by LLE, SPE cartridge, and SPE disk in our laboratory showed statistically significant differences on 3 of 4 discharges tested. Further, infrared (IR) spectra and gas chromatography with a flame ionization detector (GC/FID) demonstrate that different material is being extracted by each of the extraction techniques.

Response: EPA has seen data that demonstrate differences and other data that demonstrate equivalence in results produced by LLE and SPE, and EPA has decided, based on comments and data received, that SPE should be allowed in the version of Method 1664 approved today. However, EPA has added the note to Method 1664 that, although SPE may be used, it is the discharger/industrial user's responsibility to assure that results produced using SPE are equivalent to results produced using liquid-liquid extraction (LLE).

E. Grace Period for CFC–113

Comments: Six months is too long to allow existing stocks of CFC–113 to be used up. Use should cease immediately. Use of CFC–113 should be allowed until existing stocks are used up, regardless of how long it takes. Six months is the correct period for stocks of CFC–113 to be used up. The date of the changeover should be the first day of the month to simplify compliance monitoring. NPDES permittees should be given 36 months to determine if they can be compliant with the new method. Use of Method 1664 should not be required for at least one year after the method is approved. Method 413.1 should not be withdrawn for at least two years after the effective date of Method 1664. The additional time should be used to generate data and establish new permit limits as needed.

Response: The comments on this issue are diverse but most commenters supported a grace period for switching to Method 1664. Based on comments received, on EPA's desire to allow existing stocks of CFC–113 to be used up, on EPA's desire not to mandate the use of Method 1664 if a CFC-based method is specified in the permit, and on extension of the laboratory exemption for use of CFCs until 2005, approved methods employing CFC–113 remain approved.

*F. Use of Silica-gel Treated, n-*Hexane Extractable Material (SGT–HEM) Procedure

Comment: Hexane-extractable material and silica-gel treated, *n*-hexane-extractable material (SGT–HEM) should be better defined.

Response: HEM and SGT–HEM are method-defined analytes, i.e., they are defined by the procedure used to measure them, in this case Method 1664.

Comment: When will it be necessary to perform the (SGT–HEM) procedure for total petroleum hydrocarbons (TPH)?

Response: Monitoring of TPH (now SGT–HEM or ''non-polar material;'' NPM) is presently required in the monitoring and reporting requirements under the Coil Coating point source category at 40 CFR 465.03(c). EPA intends to consider allowing use of Method 1664 through subsequent rulemaking for that category and in other categorical effluent guidelines. In today's rulemaking, EPA is also making the SGT–HEM procedure available to permitting authorities for instances in which only the non-polar material component of oil and grease needs to be monitored. The SGT–HEM procedure allows monitoring of these substances.

G. Detection and Quantitation

Comment: Many commenters provided MDL data.

Response: The MDLs that the commenters provided and the resulting MLs are consistent with the range of MDLs and MLs that EPA obtained in the Agency's MDL studies. The average (mean) of these MDLs is 2.1 mg/L and the median is 1.4 mg/L. The pooled single-operator MDL, using the 34 MDLs listed above plus the 5 MDLs EPA reported at proposal (61 FR 1736–1737, January 23, 1996), and calculated as the root-mean-square of the standard deviations multiplied by a student's t value of 2.33 for 234 degrees of freedom, is 2.0 mg/L. These MDLs are all equal or close to the value of 1.4 mg/L that EPA proposed and support an ML in the range of 5—10 mg/L. Based on EPA's data and data provided by commenters, EPA has retained the MDL at 1.4 mg/L and the ML at 5 mg/L for both HEM and for SGT–HEM in the version of Method 1664 approved for use in today's final rule.

Comment: Several commenters state that estimates of detection and quantitation in Method 1664 are one or more of the following: they cannot be achieved; are scientifically unsound; are neither realistic nor reproducible; are flawed; were developed in an arbitrary and capricious manner; use an inappropriate multiplication factor; are based on spikes into reagent water instead of wastewaters; do not consider effluent characteristics; were developed using analytical standards; are based on a protocol that has never been subjected to peer review and public comment; are not representative of expected performance by qualified laboratories; represent performance of ''expert'' or ''research-grade'' laboratories; are not a statistical predictor of laboratory performance; and were not validated on an interlaboratory basis.

Response: EPA disagrees that the MDLs and MLs in Method 1664 were developed inappropriately. EPA has received nearly identical sets of comments from many of the same industry organizations on many recent methods that EPA has proposed for use in its wastewater programs. (See, for examples, responses to comments in the final rules promulgating use of Method 1613 (57 FR 31805, 62 FR 48394) and use of Method 1650 and 1653 (63 FR 18503)). EPA responds to these comments briefly and collectively here with the same responses provided in those comments and responses. Responses to some of the individual issues raised by commenters are further amplified in other responses.

EPA has used the MDL successfully for estimating the lowest level at which a substance can be detected since 1984. The MDL procedure was subjected to peer review when the original article on the MDL was published in Environmental Science and Technology in 1981 (ES&T 15, 1426–1435). The MDL procedure is subjected to public comment with every MDL that EPA publishes in test methods proposed in the **Federal Register** for use in EPA programs. EPA believes that the MDL procedure is viable and provides an estimate of the lowest concentration of an analyte that can be detected. For Method 1664, EPA did not select the lowest or highest MDL from the five MDL studies that EPA performed prior to proposal; rather, the Agency selected the central value of the five MDLs determined, and provided the rationale for this selection process at proposal (61 FR 1736—1737). This MDL is supported by MDLs in comments received from laboratories that do not necessarily represent ''expert'' or ''research-grade'' laboratories.

With respect to the comment on lack of interlaboratory validation of the MDL and ML, EPA performed an interlaboratory validation of Method 1664 at levels consistent with historical interlaboratory method validation studies performed by EPA, ASTM, AOAC-International, the organizations that publish Standard Methods for the Examination of Water and Wastewater (Standard Methods), and by other organizations that validate methods. EPA and all of these organizations have not historically performed interlaboratory studies to estimate detection and quantitation limits. EPA used data from multiple single laboratory studies instead to support the MDL and ML. Commenters making this comment did not perform interlaboratory detection limit studies to demonstrate that EPA's estimates are flawed.

EPA will continue to examine the issues of detection and quantitation. The Agency initiated a study recently to evaluate these concepts and plans to involve the public on these issues.

H. Matrix Effects

Comment: Method 1664 produces severe emulsion problems. These emulsions were not formed when using Method 413.1. Breaking these emulsions requires additional handling, increasing the potential for inaccuracy. Bad emulsions can never be completely broken.

Response: Section 11.3.5 of Method 1664 contains the following suggestions for overcoming emulsions: ''stirring, filtration through glass wool, use of solvent phase separation paper, centrifugation, use of an ultrasonic bath with ice, addition of NaCl, or other physical methods. Alternatively, solid-phase, continuous, or other extraction techniques may be used to prevent emulsion formation, provided that the requirements in Section 9.1.2 are met.''

Comment: EPA must recognize the problems that the high salt content of produced water creates.

Response: A small amount of water may be soluble in the *n*-hexane used as the extracting solvent in Method 1664. In turn, a small amount of salt may be dissolved in the hexane/water mixture. However, after extraction, the solution is passed through granular, anhydrous sodium sulfate to remove all traces of water. In turn, this process should remove the residual salt. If not, the extract can be back-extracted with reagent water to remove all traces of residual salt. After back-extraction, the solution can be again filtered through sodium sulfate to remove residual traces of water.

I. Method Modifications

Comment: We endorse the concept of performance-based methods to allow for advances in technology and reductions in the cost of analyses and encourage EPA to continue to move in this direction.

Response: In response to this and similar requests, EPA proposed an implementation of a performance-based measurement system (PBMS) in the Streamlining Initiative on March 28, 1997 (62 FR 14976) and solicited comment on an alternative PBMS approach on October 6, 1997 (62 FR 52098). The Streamlining Initiative allows modification of a reference method so long as equivalent or superior performance can be demonstrated. The alternative PBMS approach allows modification of a method or use of any other method based on performance demonstrated equal or superior to a reference method (as with Streamlining) or to a set of data quality objectives (DQOs). The alternative PBMS approach does not allow modification of methods for method-defined analytes, such as oil and grease, because the analyte being measured is defined by the method used. EPA expects to make a final determination on PBMS for method-defined analytes in the future, as the Agency gains experience in dealing with any potential issues, and as comments from stakeholders on these and other PBMS approaches are received.

Comment: Please clarify the ''specific discharge'' as it relates to ''the

discharger must demonstrate that the modified method produces results equivalent to those produced by Method 1664 for each specific discharge.''

Response: Specific discharge is equivalent to ''matrix type'' defined in the regulatory language proposed in EPA's Streamlining Initiative (62 FR 14994, March 28, 1997) and means a sample medium with common characteristics across a given industrial subcategory. Examples include: C-stage effluents from chlorine bleach mills in the Pulp, Paper, and Paperboard industrial category; effluent from the continuous casting subcategory of the Iron and Steel industrial category; publicly owned treatment work (POTW) sludge; and in-process streams in the Atlantic and Gulf Coast Hand-shucked Oyster Processing subcategory. For further explanation of this definition, please see the proposed Streamlining Initiative.

Comment: Declaring that performance-based modifications can be made perpetuates the incorrect notion that empirically determined analytes are not affected when the practice and manner of determining them changes. When a protocol defines an analyte, deviation from that protocol should not be permitted.

Response: EPA agrees with this comment, but only in part. The commenter presumably would not argue that the result of the analysis will be affected by the size of the funnel that contains the sodium sulfate used for removal of residual water. In allowing modification of Method 1664, the Agency identified and distinguished changes that would not adversely affect method performance (and analyte measurement) from changes that would. As a result, laboratories may modify extraction and concentration procedures, but not allow changes to the determinative technique (gravimetry), provided that equivalent or superior performance of the modification is demonstrated on a reference matrix (reagent water) and on the discharge to which the modification will be applied. EPA believes that this middle ground is the best that can be done to allow modifications and protect the reliability of the data produced with a modification.

J. Matrix Spike/Matrix Spike Duplicate (MS/MSD)

Comment: The relative percent difference criteria for the MS/MSD are too stringent and do not account for natural variations in grab samples.

Response: EPA changed the requirement for an MSD to a suggestion but believes that the MS/MSD will work with flowing streams. In the Phase I and Phase II studies that EPA performed in support of development of EPA Method 1664, flowing streams were split using the procedures given in the note in Section 8.2 of EPA Method 1664 and provided reliable replicates for testing. For the Phase II study, the discharge streams sampled were adjusted to provide background concentrations of oil and grease. No difficulty was encountered recovering spikes into these samples or achieving precise results with replicates.

Comment: The requirement for an MS/MSD at a frequency of 10 percent and per sample batch is excessive and unnecessarily burdensome.

Response: EPA agrees that this requirement is unnecessarily restrictive and has reduced the frequency of the MS to 5 percent and has changed the requirement for the MSD to a suggestion.

K. Precision and Recovery

Comment: The precision and recovery criteria are unrealistic and will not be achievable by most laboratories.

Response: EPA believes that the difficulties in achieving the precision and recovery criteria in EPA Method 1664 are attributable to precipitation of hexadecane and stearic acid from the standard solution and to failure of laboratories to adequately rinse all traces of the standard from glassware. EPA has modified the version of EPA Method 1664 being approved today to halve the concentration of hexadecane and stearic acid in the standard solution and require spiking twice as much. EPA also has noted that the sample container and other surfaces that the sample contacts must be carefully rinsed with solvent to effect quantitative transfer of oil and grease and NPM from the sample to the extract.

L. Differences in Results Produced by n-Hexane and CFC–113

Comment: Changing to *n*-hexane may cause dischargers to exceed permit limitations because the new method may result in higher oil and grease values. EPA should provide guidance to permit writers and enforcement staff for dealing with this positive bias.

Response: EPA believes that the possibility that the change in solvent will result in non-compliance is minimal based on the results from the Freon Replacement Studies conducted prior to proposal. If a discharger believes that the change to *n*-hexane will cause false readings of noncompliance, the discharger should discuss the situation with the permitting authority. EPA cautions that to demonstrate that the noncompliance is the result of the change to *n*-hexane alone, comparative data must be obtained using CFC–113 and *n*-hexane on a sufficient number of real-world samples and the difference must be statistically significant. For guidance in this demonstration, the commenter is referred to Section III.D. of this preamble and the statistical tests for significance in reports for EPA's Phase I and Phase II Freon Replacement studies that were included in the Docket at proposal.

Comment: EPA's proposal to replace previously approved methods with EPA Method 1664 is arbitrary and capricious and will render obsolete all effluent limitation guidelines and permit limitations for oil and grease that were based on the Freon method.

Response: First, EPA is not withdrawing the previously approved methods in today's rulemaking. Second, as discussed earlier, EPA believes that the use of *n*-hexane will generally not affect the oil and grease results significantly and, therefore, the possibility that the change in solvent will result in non-compliance is minimal. Third, in studies comparing different extraction solvents for measurement of oil and grease, and in the proposal of Method 1664, EPA acknowledged and again acknowledges that no two extraction solvents will produce exactly the same results for a method-defined analyte such as oil and grease. By providing for recalculation of compliance targets based on side-by-side data, EPA believes that the Agency has taken reasonable steps to minimize the impact of using Method 1664 rather than the Freon method in those cases when the difference in results may cause a non-compliance with a permit limitation.

Comment: Two commenters stated that samples collected and analyzed under the previously approved methods are used to determine a discharger's compliance with local and Federal categorical limits and that it may be appropriate for EPA to re-evaluate all of these limits.

Response: There are more than 600 industrial subcategories and nearly all contain a limit for oil and grease. Extensive time and expense would be required for re-evaluation of all limits in all of these subcategories. EPA conducted side-by-side evaluations on 39 facilities in 24 industrial categories in the Phase I Freon Replacement Study and on 25 facilities in 16 industrial categories in the Phase II study. Based on the results from these studies, EPA does not believe that a re-evaluation of the categorical limits is neccesary at this

time and supports the use of Method 1664 instead of the Freon method to determine compliance with the categorical limits. However, EPA periodically re-evaluates categorical effluent limitations and plans to use Method 1664 to support this effort. Until each categorical standard is re-evaluated, EPA has decided to allowed the continued use of the CFC–113 methods. However, because compliance targets can be adjusted on a case-by-case basis, EPA encourages the replacement of CFC–113 with *n*-hexane consistent with EPA's efforts to reduce dependency on the use of chlorofluorocarbons.

M. Method Validation and QC Acceptance Criteria

Comment: EPA Method 1664 was not validated properly because inappropriate sample concentrations of 57 and 170 mg/L were used in the Twin Cities Round-robin study (TCRR).

Response: EPA disagrees that EPA Method 1664 was validated improperly. Laboratories that participated in the TCRR study validated the Method at concentrations of 40 mg/L for HEM and 20 mg/L for NPM in the initial precision and recovery (IPR) and ongoing precision and recovery (OPR) tests, and at concentrations of 57 and 170 mg/L for ''real-world'' samples from a petroleum and non-petroleum source, respectively. It is customary to validate analytical methods at concentrations in the middle of the concentration range to avoid attempting to compare results for which HEM is not detected and to allow lowered recoveries to be measured reliably, should lowered recoveries occur. For additional information on this issue, see the response to comments on the detection/quantitation issue.

N. Quality Control

Comment: The QC specified in Section 9 is excessive, especially for every discharge point.

Response: As stated elsewhere in these comment responses, the frequency requirement for an MSD has been changed to a suggestion and the frequency of the MS and OPR have been reduced to a minimum of 5 percent. EPA does not believe that a requirement to assess the precision and recovery on every 20th sample is excessive.

O. Sample Collection and Preservation

Comment: EPA should add a compositing procedure to EPA Method 1664. Samples can be composited in the laboratory by collecting individual 250-mL samples over the course of a day, pouring each 250-mL sample into the separatory funnel, rinsing each of the four bottles (and caps) sequentially with 30 mL of *n*-hexane, and using the 30 mL of *n*-hexane for the extraction.

Response: EPA has added the above compositing procedure to EPA Method 1664.

Comment: Change the temperature requirement to 4 ± 2 °C with the note that a lower storage temperature may be used so long as the sample is not frozen.

Response: EPA chose a temperature range of 0–4 °C to be consistent with holding time study data and to allow storage at 0 °C.

P. Miscellaneous Issues

Comment: The frequency of verification of balance calibration is excessive. One commenter suggests verification before and after every 20 samples. Another commenter suggests verification before and after daily measurements. A third commenter suggests that calibration verification is unnecessary. A fourth commenter suggests monthly verification.

Response: Calibration is verified prior to the first batch, between batches, and after the last batch. EPA does not believe that this is excessive. (An analytical batch is between 4 and 23 measurements.)

Comment: Method ruggedness has not been established, method validity has not been confirmed on a wide range of sample matrices, and the method is still empirical. The method needs further review and validation on real-world samples.

Response: Based on EPA's Phase II and method validation studies, and data supplied by commenters, EPA believes that Method 1664 has been adequately validated and is sufficiently rugged for its intended use. Method 1664 will always be empirical because oil and grease and NPM are method-defined analytes.

Comment: The flask used for collection of distillate should be referred to as a ''distillate collection flask'' rather than a ''waste collection flask'' because the word ''waste'' can imply hazardous waste.

Response: EPA agrees and has changed ''waste collection flask'' to ''distillate collection flask''.

Comment: Method 1664 requires that a smaller sample volume should be extracted when a sample contains >1000 mg/L of oil and grease. Should the smaller volume be diluted to one liter for extraction, or should the smaller volume be extracted without dilution?

Response: The smaller volume should be diluted to one liter so that changes to the Method are minimized. EPA has clarified this dilution in Method 1664.

Comment: The higher boiling point of n-hexane will cause loss of the more volatile constituents of oil and grease and therefore produce greater variability in results.

Response: The average amount of oil and grease determined when using *n*-hexane vs CFC–113 (96%), as detailed in other responses to comments, may be attributable to loss of some volatile constituents.

Comment: What is to be the fate of Method 418.1? Method 418.1 and SW–846 Method 9071 should not be used if continued use of Method 413.1 is disallowed.

Response: Method 418.1 is a CFC–113/infrared (IR) method for determination of oil and grease. Although listed in Methods for Chemical Analysis of Water and Wastes (EPA 600/4–79–020; NTIS PB84–128677), Method 418.1 has not been approved for use at 40 CFR Part 136. EPA plans a collaborative study with Canada for development of an IR method that does not use CFC–113 and may propose an IR method depending on the outcome of that study.

A solvent change from CFC–113 to n-hexane is being made in SW–846 Method 9071. Method 1664 replaces Method 9070 as the approved SW–846 method for determination of oil and grease in water, as detailed in section III.B of this preamble.

Comment: EPA should include a thorough discussion of oil and grease as a ''method-defined analyte'' in the final rule so that all stakeholders clearly understand the results generated by Method 1664.

Response: EPA explained in section V of the proposal (61 FR 1737, January 23, 1996) that determination of oil and grease is dependent on how the measurement is made and cited examples of biochemical oxygen demand and total suspended solids as other method-defined analytes. Method-defined analytes are those analytes that are defined by the procedure used to measure them. For oil and grease, the nature and the amount of the substances extracted from complex wastewater discharges and then measured is determined by the extracting solvent and technique.

Comment: Many commenters suggested that Section 11.4.4 be changed to require solvent evaporation and desiccation to constant weight. One commenter suggested specific wording for this change. Another commenter suggested a desiccation time of 24 hours.

Response: Section 11.4.4 has been changed to the specific wording suggested by the first commenter but

has not been modified to include a 24-hour time requirement so that constant weight achieved in a shorter time can be considered valid.

Comment: It should be EPA's responsibility to certify each laboratory and not the responsibility of each and every company that uses the laboratory.

Response: EPA does not certify laboratories under the Clean Water Act and RCRA analytical programs. The States have this responsibility. EPA is working with the States and other interested parties under the auspices of the National Environmental Laboratory Accreditation Program (NELAP) to accredit laboratory auditing organizations.

VII. Regulatory Requirements

A. Executive Order 12866

Under Executive Order 12866, (58 FR 51735 (October 4, 1993)) the Agency must determine whether a regulatory action is ''significant'' and therefore subject to OMB review and the requirements of the Executive Order. The Order defines ''significant regulatory action'' as one that is likely to result in a rule that may: (1) Have an annual effect on the economy of $100 million or more or adversely affect in a material way the economy, a sector of the economy, productivity, competition, jobs, the environment, public health or safety, or State, local, or tribal governments or communities; (2) create a serious inconsistency or otherwise interfere with an action taken or planned by another agency; (3) materially alter the budgetary impact of entitlements, grants, user fees, or loan programs or the rights and obligations of recipients thereof; or (4) raise novel legal or policy issues arising out of legal mandates, the President's priorities, or the principles set forth in the Executive Order.''

It has been determined that this rule is not a ''significant regulatory action'' under the terms of Executive Order 12866 and is therefore not subject to OMB review.

B. Unfunded Mandates Reform Act

Title II of the Unfunded Mandates Reform Act of 1995 (UMRA), Pub. L. 104–4, establishes requirements for Federal agencies to assess the effects of their regulatory actions on State, local, and tribal governments and the private sector. Under section 202 of the UMRA, EPA generally must prepare a written statement, including a cost-benefit analysis, for proposed and final rules with ''Federal mandates'' that may result in expenditures to State, local, and tribal governments, in the aggregate, or to the private sector, of $100 million or more in any one year. Before promulgating an EPA rule for which a written statement is needed, section 205 of the UMRA generally requires EPA to identify and consider a reasonable number of regulatory alternatives and adopt the least costly, most cost-effective or least burdensome alternative that achieves the objectives of the rule. The provisions of section 205 do not apply when they are inconsistent with applicable law. Moreover, section 205 allows EPA to adopt an alternative other than the least costly, most cost-effective or least burdensome alternative if the Administrator publishes with the final rule an explanation why that alternative was not adopted. Before EPA establishes any regulatory requirements that may significantly or uniquely affect small governments, including tribal governments, it must have developed under section 203 of UMRA a small government agency plan. The plan must provide for notifying potentially affected small governments, enabling officials of affected small governments to have meaningful and timely input in the development of EPA regulatory proposals with significant Federal intergovernmental mandates, and informing, educating, and advising small governments on compliance with the regulatory requirements.

Today's final rule contains no Federal mandates (under the regulatory provisions of Title II of UMRA) for State, local, or tribal governments or the private sector. EPA has determined that this rule contains no regulatory requirements that might significantly or uniquely affect small governments. This rule would impose no enforceable duty on any State, local or Tribal governments or the private sector, nor would it significantly or uniquely affect them. This rule makes available an additional testing procedure which would merely standardize the procedures when testing is otherwise required by a regulatory agency. Therefore, today's rule is not subject to the requirements of sections 202, 203 and 205 of UMRA.

C. Regulatory Flexibility Act

Under the Regulatory Flexibility Act (RFA), 5 U.S.C. 601 *et seq.*, as amended by the Small Business Regulatory Enforcement Fairness Act (SBREFA), EPA generally is required to conduct a regulatory flexibility analysis describing the impact of the regulatory action on small entities as part of rulemaking. However, under section 605(b) of the RFA, if EPA certifies that the rule will not have a significant economic impact on a substantial number of small entities, EPA is not required to prepare a regulatory flexibility analysis. Pursuant to section 605(b) of the Regulatory Flexibility Act, 5 U.S.C. 605(b), the Administrator certifies that this rule will not have a significant economic impact on a substantial number of small entities. This regulation merely approves an additional testing procedure for the measurement of oil and grease and non-polar material but does not require its use. The new approved method uses n-hexane which has a much lower cost than Freon-113, which is used in the currently approved methods.

D. Paperwork Reduction Act

This rule contains no information collection requirements. Therefore, no information collection request has been submitted to the Office of Management and Budget (OMB) for review and approval under the Paperwork Reduction Act of 1980, 44 U.S.C. 3501 *et seq.*

E. Submission to Congress and the General Accounting Office

The Congressional Review Act, 5 U.S.C. section 801 *et seq.*, as added by the Small Business Regulatory Enforcement Fairness Act of 1996, generally provides that before a rule may take effect, the agency promulgating the rule must submit a rule report, which includes a copy of the rule, to each House of the Congress and to the Comptroller General of the United States. EPA will submit a report containing this rule and other required information to the U.S. Senate, the U.S. House of Representatives and the Comptroller General of the United States prior to publication of the rule in the **Federal Register**. A major rule cannot take effect until 60 days after it is published in the **Federal Register**. This rule is not a ''major rule'' as defined by 5 U.S.C. section 804(2). This rule will take effect on the effective date shown at the beginning of this preamble.

F. National Technology Transfer and Advancement Act

Under Section 12(d) of the National Technology Transfer and Advancement Act (NTTAA), the Agency is required to use voluntary consensus standards in its regulatory activities unless to do so would be inconsistent with applicable law or otherwise impractical. Voluntary consensus standards are technical standards (e.g., materials specifications, test methods, sampling procedures, business practices, etc.) that are developed or adopted by voluntary consensus standards bodies. Where

available and potentially applicable consensus standards are not used by EPA, the Act requires the Agency to provide Congress, through the Office of Management and Budget (OMB), an explanation of the reasons for not using such standards. EPA's search of the technical literature has revealed that there are no consensus methods for determination of hexane extractable material (HEM) and silica gel treated hexane extractable material (SGT–HEM), although the American Society of Testing and Materials (ASTM) is in the process of developing an analytical method for the determination of HEM. If ASTM or another voluntary consensus standard body approves such a method and EPA believes that the method is suitable for compliance monitoring and other purposes, EPA will promulgate the method in a subsequent rule.

G. Executive Order 13045

The Executive Order, ''Protection of Children from Environmental Health Risks and Safety Risks,'' (62 FR 19885), applies to any rule initiated after April 21, 1997, or proposed after April 21, 1998, that: (1) is determined to be ''economically significant'' as defined under E.O. 12866, and (2) concerns an environmental health or safety risk that EPA has reason to believe may have a disproportionate effect on children. If the regulatory action meets both criteria, the Agency must evaluate the environmental health or safety effects of the planned rule on children, and explain why the planned regulation is preferable to other potentially effective and reasonably feasible alternatives considered by the Agency.

This regulation is not subject to the Executive Order because EPA published a notice of proposed rulemaking before April 21, 1998 and further because this is not an economically significant rule as defined under E.O. 12866. However, EPA's policy since November 1, 1995, has been to consistently and explicitly consider risks to infants and children in all risk assessments generated during its decision making process including the setting of standards to protect public health and the environment.

EPA's Office of Water has historically considered risks to sensitive populations (including fetuses, infants, and children) in establishing risk assessments for setting health or safety standards. This regulation does not involve the development of a standard to mitigate environmental health or safety risks. This regulation instead approves an additional analytical method for compliance monitoring. However, because the extraction solvent used in Method 1664, *n*-hexane, has been associated with neurotoxic effects, EPA investigated the available health information to determine whether the fetus may be adversely affected as a result of pregnant women being exposed to *n*-hexane in the laboratory environment. Based on animal studies, the available information on developmental effects does not indicate any potential risks to the fetus due to exposure to *n*-hexane.

H. Executive Order 12875

Under Executive Order 12875, ''Enhancing the Intergovernmental Partnership,'' EPA may not issue a regulation that is not required by statute and that creates a mandate upon a State, local or tribal government, unless the Federal government provides the funds necessary to pay the direct compliance costs incurred by those governments, or EPA consults with those governments. If EPA complies by consulting, E.O. 12875 requires EPA to provide to the Office of Management and Budget a description of the extent of EPA's prior consultation with representatives of affected State, local and tribal governments, the nature of their concerns, any written communications from the governments, and a statement supporting the need to issue the regulation. In addition, Executive Order 12875 requires EPA to develop an effective process permitting elected officials and other representatives of State, local and tribal governments ''to provide meaningful and timely input in the development of regulatory proposals containing significant unfunded mandates.''

Today's rule does not create a mandate on State, local or tribal governments. The rule does not impose any enforceable duties on these entities. This rule makes available an additional testing procedure that would merely standardize the procedures when testing is otherwise required by a regulatory agency. Accordingly, the requirements of section 1(a) of Executive Order 12875 do not apply to this rule.

I. Executive Order 13084

Under Executive Order 13084, ''Consultation and Coordination with Indian Tribal Governments,'' EPA may not issue a regulation that is not required by statute, that significantly or uniquely affects the communities of Indian tribal governments, and that imposes substantial direct compliance costs on those communities, unless the Federal government provides the funds necessary to pay the direct compliance costs incurred by the tribal governments, or EPA consults with those governments. If EPA complies by consulting, Executive Order 13084 requires EPA to provide to the Office of Management and Budget, in a separately identified section of the preamble to the rule, a description of the extent of EPA's prior consultation with representatives of affected tribal governments, a summary of the nature of their concerns, and a statement supporting the need to issue the regulation. In addition, E.O. 13084 requires EPA to develop an effective process permitting elected and other representatives of Indian tribal governments ''to provide meaningful and timely input in the development of regulatory policies on matters that significantly or uniquely affect their communities.''

Today's rule does not significantly or uniquely affect the communities of Indian tribal governments. Further, this rule does not impose substantial direct compliance costs on tribal governments. This rule makes available an additional testing procedure which would merely standardize the procedures when testing is otherwise required by a regulatory agency. Accordingly, the requirements of section 3(b) of Executive Order 13084 do not apply to this rule.

List of Subjects

40 CFR Part 136

Environmental protection, Analytical methods, Incorporation by reference, Monitoring, Reporting and recordkeeping requirements, Waste treatment and disposal, Water pollution control.

40 CFR Part 260

Environmental protection, Administrative practice and procedure, Analytical methods, Confidential business information, Hazardous waste, Incorporation by reference, Reporting and recordkeeping requirements.

Dated: May 7, 1999.

Carol M. Browner,

Administrator.

For the reasons set out in the preamble, title 40, chapter I of the Code of Federal Regulations, is amended as follows:

PART 136—GUIDELINES ESTABLISHING TEST PROCEDURES FOR THE ANALYSIS OF POLLUTANTS

1. The authority for part 136 continues to read as follows:

Authority: Secs. 301, 304(h), 307, and 501(a) Pub. L. 95–217, 91 Stat. 1566, *et seq.* (33 U.S.C. 1251, *et seq.*) (the Federal Water Pollution Control Act Amendments of 1972 as amended by the Clean Water Act of 1977.)

2. In § 136.3, paragraph (a), Table IB is amended by revising entry 41 to read as follows:

§ 136.3 Identification of test procedures.

(a) * * *

* * * * *

TABLE IB—LIST OF APPROVED INORGANIC TEST PROCEDURES

Parameter, units and method	Reference (method number or page)				
	EPA [1, 35]	STD methods 18th ed.	ASTM	USGS[2]	Other
* * *	*	*	*		*
41. Oil and grease—Total recoverable, mg/L: Gravimetric (extraction).	413.1	5520 B[38]			
Oil and grease and non-polar material, mg/L: Hexane extractable material (HEM): *n*-Hexane extraction and gravimetry[42].	1664, Rev. A.				
Silica gel treated HEM (SGT–HEM): Silica gel treatment and gravimetry[42].	1664, Rev. A.				
* * *	*	*	*		*

Table 1B Notes:

[1] ''Methods for Chemical Analysis of Water and Wastes'', Environmental Protection Agency, Environmental Monitoring Systems Laboratory-Cincinnati (EMSL–Ci), EPA–600/4–79–020, Revised March 1983 and 1979 where applicable.

[2] Fishman, M.J., et al, ''Methods for Analysis of Inorganic Substances in Water and Fluvial Sediments,'' U.S. Department of the Interior, Techniques of Water—Resource Investigations of the U.S. Geological Survey, Denver, CO, Revised 1989, unless otherwise stated.

* * * * * * *

[35] Precision and recovery statements for the atomic absorption direct aspiration and graphite furnace methods, and for the spectrophotometric SDDC method for arsenic are provided in Appendix D of the part titled, ''Precision and Recovery Statements for Methods for Measuring Metals.''

* * * * * * *

[38] Only the trichlorofluoromethane extraction solvent is approved.

* * * * * * *

[42] Method 1664, Revision A ''n-Hexane Extractable Material (HEM; Oil and Grease) and Silica Gel Treated n-Hexane Extractablke Material (SGT–HEM; Non-polar Material) by Extraction and Gravimetry'' EPA–821–R–98–002, February 1999. Available at NTIS, PB–121949, U.S. Department of Commerce, 5285 Port Royal, Springfield, Virginia 22161.

* * * * * * *

PART 260—HAZARDOUS WASTE MANAGEMENT SYSTEM: GENERAL

1. The authority for part 260 continues to read as follows:

Authority: 42 U.S.C. 6905, 6912(a), 6921–6927, 6930, 6934, 6935, 6937, 6939, and 6974.

Subpart B—Definitions

2. Section 260.11 is amended by revising paragraph (a)(11) and by adding paragraph (a)(16) to read as follows:

§ 260.11 References.

* * * * *

(a) * * *

(11) ''Test Methods for Evaluating Solid Waste, Physical/Chemical Methods,'' EPA Publication SW–846 [Third Edition (November 1986), as amended by Updates I (dated July 1992), II (dated September 1994), IIA (dated August 1993), IIB (dated January 1995), III (dated December 1996) and IIIA (dated April 1998)]. The Third Edition of SW–846 and Updates I, II, IIA, IIB, and III (document number 955–001–00000–1) are available from the Superintendent of Documents, U.S. Government Printing Office, Washington, DC 20402, (202) 512–1800. Update IIIA is available through EPA's Methods Information Communication Exchange (MICE) Service. MICE can be contacted by phone at (703) 821–4690. Update IIIA can also be obtained by contacting the U.S. Environmental Protection Agency, Office of Solid Waste (5307W), OSW Methods Team, 401 M Street, SW, Washington, DC, 20460. Copies of the Third Edition and all of its updates are also available from the National Technical Information Service (NTIS), 5285 Port Royal Road, Springfield, VA 22161, (703) 605–6000 or (800) 553–6847. Copies may be inspected at the Library, U.S. Environmental Protection Agency, 401 M Street, SW, Washington, DC 20460; or at the Office of the Federal Register, 800 North Capitol Street, NW, suite 700, Washington, DC.

* * * * *

(16) Method 1664, Revision A, *n*-Hexane Extractable Material (HEM; Oil and Grease) and Silica Gel Treated *n*-Hexane Extractable Material (SGT–HEM; Non-polar Material) by Extraction and Gravimetry. Available at NTIS, PB99–121949, U.S. Department of Commerce, 5285 Port Royal, Springfield, Virginia 22161.

* * * * *

[FR Doc. 99–12163 Filed 5–13–99; 8:45 am]

BILLING CODE 6560–50–P

FEDERAL COMMUNICATIONS COMMISSION

47 CFR Part 73

Radio Broadcast Services

CFR Correction

In Title 47 of the Code of Federal Regulations, parts 70 to 79, revised as of Oct. 1, 1998, page 193, § 73.624 (c) introductory text, last sentence, is corrected by adding ''not'' after ''shall'' and before ''be''.

[FR Doc. 99–55519 Filed 5–13–99; 8:45 am]

BILLING CODE 1505–01–D

DEPARTMENT OF COMMERCE

National Oceanic and Atmospheric Administration

50 CFR Part 660

[Docket No. 990219053–9114–02; I.D. 011999B]

RIN 0648–AK83

Fisheries off West Coast States and in the Western Pacific; West Coast Salmon Fisheries; Amendment 13

AGENCY: National Marine Fisheries Service (NMFS), National Oceanic and Atmospheric Administration (NOAA), Commerce.

ACTION: Final rule.

SUMMARY: NMFS issues this final rule to implement Amendment 13 to the Pacific Coast Salmon Plan (FMP) in accordance with the Magnuson-Stevens Fishery Conservation and Management Act (Magnuson-Stevens Act). Amendment 13 changes the management of Oregon coastal natural (OCN) coho salmon (coho), *Oncorhynchus kisutch*, by disaggregating the OCN stock into four components, restricting total harvest exploitation rates to a maximum of 35 percent, and linking increases in harvest rates to increases in marine survival and proven reproductive success of the present brood year. The only regulatory change that is required is a technical change to a provision regarding coho allocation south of Cape Falcon to make it consistent with the new OCN harvest levels. The intended effect of the final rule is to make the requisite technical change.

DATES: Effective June 14, 1999.

ADDRESSES: Copies of the amendment, including the environmental assessment and the regulatory impact review/regulatory flexibility analysis are available from Lawrence D. Six, Executive Director, Pacific Fishery Management Council, Metro Center, Suite 420, 2000 SW. First Avenue, Portland, OR 97201–5344.

FOR FURTHER INFORMATION CONTACT: William L. Robinson at 206– 526–6140, Svein Fougner at 562–980–4040, or Lawrence D. Six at 503–326–6352.

SUPPLEMENTARY INFORMATION:

Background

The Pacific Fishery Management Council (Council) developed the FMP, and the Secretary approved it under the Magnuson-Stevens Act, 16 U.S.C. 1801 *et seq.*, in 1978. Since then, the FMP has been amended 12 times, with implementing regulations codified at 50 CFR part 660, subpart H. From 1979 to 1983, the FMP was amended annually. In 1984, a framework amendment was implemented that provided the mechanism for making preseason and inseason adjustments in the regulations without annual amendments.

The Council prepared Amendment 13 to the FMP under the provisions of the Magnuson-Stevens Act and submitted it on January 15, 1999, for Secretarial review. NMFS published a notice of availability for Amendment 13 in the **Federal Register** on January 27, 1999 (64 FR 4065), announcing a public 60-day comment period. The proposed rule was published on March 4, 1999 (64 FR 10439). The public comment period for the proposed rule ended on April 5, 1999; one comment was received. Amendment 13 was approved on April 28, 1999.

The amendment resulted from an intensive effort by the State of Oregon, led by the Governor, to develop the Oregon Coastal Salmon Restoration Initiative (OCSRI). The OCSRI was intended to restore coastal coho populations and to prevent the need for listing the stock under the Endangered Species Act (ESA). While the OCN coho have since been listed as threatened, NMFS considers the OCSRI important for the recovery of the stock. The Oregon Department of Fish and Wildlife (ODFW) proposed Amendment 13 to the Council to implement the fisheries management provisions of the OCSRI throughout both state and Federal waters wherever OCN coho are harvested. The amendment changes the management basis for OCN coho from maintaining spawner objectives to meeting exploitation rates. The determination of appropriate exploitation rates is based on the habitat production potential, incorporating the effects on the stocks of the condition of both freshwater and marine environments. This determination relies heavily on habitat-based assessment and modeling of OCN coho production. One of the amendment's primary goals is to remove fishery-related impacts as a significant impediment to the recovery of depressed OCN coho and to allow rebuilding the component population subgroups to higher levels.

Although Amendment 13 changes the management goals for OCN coho, the major provisions of this amendment are not codified because the salmon escapement goals are in the FMP rather than in the codified regulations. Therefore, the modification of the OCN escapement goals required only a minor modification of the regulations that explain that the coho allocation provisions for south of Cape Falcon apply only when coho abundance allows a directed harvest of coho. The existing regulatory language is tied to the existing level of harvest allowed on OCN coho. Implementation of Amendment 13 requires minor changes to the regulatory language in 50 CFR part 660 to make it more generic and accurate.

Comments and Responses

NMFS received no comments on the proposed rule, but received one comment regarding the Amendment.

Comment: The National Audubon Society and Oregon Trout in a joint letter supported the overall direction of the Amendment, but commented that the Council should have adopted the alternative using the fishery impact limit and spawning rebuilding criteria of full seeding of spawning habitat. The comment also maintained that the estimated production potential parameters for freshwater habitat derived from the Habitat-Based Life Cycle Model developed by Nickelson and Lawson (1996) overestimates egg-to-spawner parr survival.

Response: NMFS has some of the same concerns. However, the framework of the Amendment was designed to be flexible so that when new information is produced from the various monitoring and data collection activities required under the Amendment, the results would be incorporated into the management regime. The whole process is scheduled for a comprehensive adaptive review in 2000.

Classification

The Administrator, Northwest Region, NMFS, determined that the FMP Amendment 13 is necessary for the conservation and management of the ocean salmon fisheries and that it is consistent with the Magnuson-Stevens Act and other applicable law.

This rule has been determined to be not significant for purposes of E.O. 12866.

The Assistant General Counsel for Legislation and Regulation of the Department of Commerce certified to the Chief Counsel for Advocacy of the Small Business Administration when this rule was proposed that it would not have a significant economic impact on a substantial number of small entities. No comments were received on that certification. The basis for certification has not changed.

A formal section 7 consultation under the Endangered Species Act was conducted on the effects of Amendment 13 and the Pacific Coast Salmon Plan on three distinct population segments, or evolutionarily significant units (ESU), of coho: The central California Coastal

(CCC) ESU, the Southern Oregon Northern California Coastal (SONCC) ESU, and the Oregon Coastal (OC) ESU (61 FR 56138, October 31, 1996; 62 FR 43937 August 18, 1997; 63 FR 42587, August 10, 1998). The biological opinion issued by NMFS dated April 28, 1999, states that fishing activities under the FMP and Amendment 13 and its implementing regulations are not likely to jeopardize the continued existence of the OC coho ESU, but because of the lack of specific conservation goals in the FMP for either SONCC coho or CCC coho, ocean salmon fisheries conducted in accordance with the FMP and Amendment 13 are likely to jeopardize the continued existence of SONCC and CCC coho ESUs. The biological opinion included Reasonable and Prudent Alternatives (RPAs) that would avoid jeopardy. The FMP requires that annual management measures must comply with NMFS jeopardy standards. Therefore, fisheries to be conducted under the Amendment will be crafted to meet the RPAs of the biological opinion, and thus will avoid jeopardy.

List of Subjects in 50 CFR Part 660

Administrative practice and procedure, American Samoa, Fisheries, Fishing, Guam, Hawaiian Natives, Indians, Northern Marianas Islands, Reporting and recordkeeping requirements.

Dated: May 10, 1999.

Penelope D. Dalton,

Assitant Adminstrator for Fisheries, National Marine Fisheries Service.

For the reasons set forth in the preamble, 50 CFR part 660 is amended as follows:

PART 660—FISHERIES OFF WEST COAST STATES AND IN THE WESTERN PACIFIC

1. The authority citation for part 660 continues to read as follows:

Authority: 16 U.S.C. 1801 *et seq.*

2. In § 660.408, paragraph (c)(2)(iv) is revised to read as follows:

§ 660.408 Annual actions.

* * * * *

(c) * * *

(2) * * *

(iv) *Oregon coastal natural coho*. The allocation provisions in paragraph (c)(2) of this section provide guidance only when coho abundance permits a directed coho harvest, not when the allowable harvest impacts are insufficient to allow coho retention south of Cape Falcon. At such low levels, allowable harvest impacts will be allocated during the Council's preseason process.

* * * * *

[FR Doc. 99–12270 Filed 5–13–99; 8:45 am]

BILLING CODE 3510–22–F

Proposed Rules

Federal Register
Vol. 64, No. 93
Friday, May 14, 1999

This section of the FEDERAL REGISTER contains notices to the public of the proposed issuance of rules and regulations. The purpose of these notices is to give interested persons an opportunity to participate in the rule making prior to the adoption of the final rules.

DEPARTMENT OF AGRICULTURE

Animal and Plant Health Inspection Service

9 CFR Part 3

[Docket No. 93–076–14]

Animal Welfare; Marine Mammals

AGENCY: Animal and Plant Health Inspection Service, USDA.

ACTION: Notice of reopening and extension of comment period.

SUMMARY: We are reopening and extending the comment period for our proposed rule to amend the Animal Welfare Act regulations concerning the humane handling, care, treatment, and transportation of marine mammals in captivity. This action will allow interested persons additional time to prepare and submit comments.

DATES: We invite you to comment on Docket No. 93–076–11. We will consider all comments that we receive by May 26, 1999.

ADDRESSES: Please send your comment and three copies to: Docket No. 93–076–11, Regulatory Analysis and Development, PPD, APHIS, Suite 3C03, 4700 River Road, Unit 118, Riverdale, MD 20737–1238.

Please state that your comment refers to Docket No. 93–076–11.

You may read any comments that we receive on this docket in our reading room. The reading room is located in room 1141 of the USDA South Building, 14th Street and Independence Avenue, SW., Washington, DC. Normal reading room hours are 8 a.m. to 4:30 p.m., Monday through Friday, except holidays. To be sure someone is there to help you, please call (202) 690–2817 before coming.

APHIS documents published in the **Federal Register**, and related information, including the names of organizations and individuals who have commented on APHIS rules, are available on the Internet at http://www.aphis.usda.gov/ppd/rad/webrepor.html.

FOR FURTHER INFORMATION CONTACT: Dr. Barbara Kohn, Senior Staff Veterinarian, Animal Care, APHIS, 4700 River Road Unit 84, Riverdale, MD 20737–1228, (301) 734–7833.

SUPPLEMENTARY INFORMATION:

Background

On February 23, 1999, we published in the **Federal Register** (64 FR 8735–8755, Docket No. 93–076–11) a proposal to amend the Animal Welfare Act regulations concerning the humane handling, care, treatment, and transportation of marine mammals in captivity. The proposed regulations were developed by the Marine Mammal Negotiated Rulemaking Advisory Committee.

Comments on the proposed rule were required to be received on or before April 26, 1999. We are reopening and extending the comment period on Docket No. 93–076–11 for 30 days to May 26, 1999. This action will allow interested persons additional time to prepare and submit comments.

Authority: 7 U.S.C. 2131–2159; 7 CFR 2.22, 2.80, and 371.2(d).

Done in Washington, DC, this 10th day of April 1999.

Joan M. Arnoldi,

Acting Administrator, Animal and Plant Health Inspection Service.

[FR Doc. 99–12236 Filed 5–13–99; 8:45 am]

BILLING CODE 3410–34–P

DEPARTMENT OF HEALTH AND HUMAN SERVICES

Food and Drug Administration

21 CFR Parts 207, 607, and 807

[Docket No. 98N–1215]

Foreign Establishment Registration and Listing

AGENCY: Food and Drug Administration, HHS.

ACTION: Proposed rule.

SUMMARY: The Food and Drug Administration (FDA) is proposing to amend its regulations pertaining to the registration of foreign establishments and the listing of human drugs, animal drugs, biological products, and devices. The proposal would require foreign establishments whose products are imported or offered for import into the United States to register with FDA. The proposal would also require foreign establishments to identify a United States agent and would describe some of the agent's responsibilities. The agency is proposing these changes to implement section 417 of the Food and Drug Administration Modernization Act of 1997 (FDAMA) as it pertains to foreign establishment registration.

DATES: Written comments by July 28, 1999. Written comments on the information collection requirements by June 14, 1999.

ADDRESSES: Submit written comments to the Dockets Management Branch (HFA–305), Food and Drug Administration, 5630 Fishers Lane, rm. 1061, Rockville, MD 20852. Submit written comments on the information collection requirements to the Office of Information and Regulatory Affairs, Office of Management and Budget (OMB), New Executive Office Bldg., 725 17th St. NW., rm. 10235, Washington, DC 20502, Attn: Wendy Taylor, Desk Officer for FDA.

FOR FURTHER INFORMATION CONTACT: Philip L. Chao, Office of Policy (HF–23), Food and Drug Administration, 5600 Fishers Lane, Rockville, MD 20857, 301–827–3380.

SUPPLEMENTARY INFORMATION:

I. Introduction

On November 21, 1997, the President signed FDAMA into law (Pub. L. 105–115). Section 417 of FDAMA amended section 510(i) of the Federal Food, Drug, and Cosmetic Act (the act) (21 U.S.C. 360(i)) to require, in part, that:

(1) Any establishment within any foreign country engaged in the manufacture, preparation, propagation, compounding, or processing of a drug or a device that is imported or offered for import into the United States shall register with the Secretary the name and place of business of the establishment and the name of the United States agent for the establishment.

(2) The establishment shall also provide the information required by subsection (j).

* * *

(Section 510(j) of the act pertains to product listing.)

Generally speaking, before FDAMA's enactment, foreign establishments could, but were not required to, register with FDA. Foreign establishments were required, however, to list their products regardless of whether the foreign establishment was registered (see, e.g.,

former section 510(i) of the act, § 207.40(a) (21 CFR 207.40(a)) (38 FR 6258 at 6267, March 7, 1973)). This generated confusion and resulted in foreign establishments not complying with the listing requirement. Moreover, in some cases, the lack of registration information on foreign establishments made it difficult to determine the source of specific imported products, particularly products that were impure, counterfeit products, or products whose safety or efficacy had not been established.

In contrast, before FDAMA was enacted, the act required—and continues to require—all domestic establishments to register unless they are specifically exempted from the registration requirement and to list their products.

FDAMA changed this situation by requiring all foreign establishments engaged in the manufacture, preparation, propagation, compounding, or processing of a drug or a device that is imported or offered for import into the United States to register. It also emphasized that foreign establishments must list their products. Thus, under the act, as revised by FDAMA, both foreign and domestic establishments must now register and list their products.

II. Description of the Proposed Rule

The proposed rule would amend the establishment registration and listing regulations in part 207 (21 CFR part 207) (human and animal drugs), part 607 (21 CFR part 607) (human blood and blood products), and part 807 (21 CFR part 807) (devices). In general, the proposal would remove the distinctions between domestic and foreign establishments where appropriate, would require foreign establishments to identify a United States agent, and would describe some of the United States agent's duties.

The proposal would also make minor technical amendments, such as updating addresses of FDA offices and the names of marketing applications, to be consistent with current FDA practices.

The proposed rule would not affect veterinary biologics because such products are regulated by the U.S. Department of Agriculture.

A. Proposed Changes to Part 207 (Human Drugs and Animal Drugs)

1. Section 207.3—Definitions

a. *Definition of ''commercial distribution''*. Section 207.3(a)(5) currently defines ''commercial distribution'' as:

> any distribution of a human drug except for investigational use under part 312 of this chapter, and any distribution of an animal drug or an animal feed bearing or containing an animal drug for noninvestigational uses, but the term does not include internal or interplant transfer of a bulk drug substance between registered domestic establishments within the same parent, subsidiary, and/or affiliate company.

The proposed rule would add a new sentence to this definition to clarify that, for foreign establishments, commercial distribution does not include distribution of a human or animal drug that is neither imported nor offered for import into the United States. This change is intended to reflect the statutory language limiting the registration requirement to those foreign establishments that are ''engaged in the manufacture, preparation, propagation, compounding, or processing of a drug or a device that is imported or offered for import *into the United States*'' (emphasis added), as well as the definition of ''interstate commerce'' in section 201(b) of the act (21 U.S.C. 321(b)).

b. *Definition of ''United States agent''*. The proposed rule would define ''United States agent,'' at new § 207.3(a)(11), as ''a person residing or maintaining a place of business in the United States whom a foreign establishment designates as its agent.'' *Black's Law Dictionary* defines ''reside'' as ''live, dwell, abide, sojourn, stay, remain, lodge'' and ''to settle oneself or a thing in a place, to be stationed, to remain or stay, to dwell permanently or continuously * * *'' (see *Black's Law Dictionary* 1308 (6th ed. 1990)) and defines ''place of business,'' in part, as ''The location at which one carries on his business or employment'' (*id*. at 1149). Thus, by using the term ''residing'' and referring to a ''place of business,'' proposed § 207.3(a)(11) would permit a foreign establishment to designate, as its United States agent, either an individual who lives in the United States or a firm or company in the United States where an individual or individuals conduct business or are employed. The definition of United States agent would exclude mailboxes, answering machines or services, or other places where an individual acting as the foreign establishment's agent is not physically present.

Additionally, FDA emphasizes that it interprets section 510(i)(1) of the act as allowing for only one United States agent for each foreign establishment, for purposes of section 510(i) of the act. This interpretation is both efficient (because FDA would communicate or interact with only one United States agent rather than multiple agents who represent or purport to represent the same foreign establishment) and consistent with section 510(i)(1) of the act because the act refers to the United States agent in singular, rather than plural, terms.

2. Section 207.7—Establishment Registration and Product Listing for Human Blood and Blood Products and for Medical Devices

Section 207.7(a) currently states, in part, that owners and operators of human blood and blood product establishments are to register and list their products in accordance with part 607.

The proposal would revise the address for the office in the Center for Biologics Evaluation and Research that receives the registration and listing information.

3. Section 207.10—Exemptions for Domestic Establishments

Currently, § 207.10 exempts various domestic entities or persons from the registration requirements. Some exemptions reflect the statutory language in section 510(g) of the act, whereas others were exempted by FDA because registering such persons would not be necessary to protect the public health.

The proposed rule would amend § 207.10 to delete the word ''domestic'' from its title, so that the provision pertains to exemptions for both foreign and domestic establishments. FDA is proposing this change because the establishment registration requirements now apply to both domestic and foreign establishments, so no further distinction is necessary in the heading of § 207.10.

However, the exemptions currently found in § 207.10(a) and (b) (pertaining to pharmacies operating under applicable local laws and to hospitals, clinics, and public health agencies that maintain establishments in conformance with local laws regulating the practice of pharmacy or medicine) would remain limited to establishments in the United States and its territories. FDA is not proposing to extend these exemptions to foreign pharmacies, hospitals, clinics, and public health agencies because the statutory exemption for pharmacies in section 510(g)(1) of the act does not extend to foreign pharmacies and because FDA has limited experience with or access to foreign laws on the practice of pharmacy or medicine and, therefore, cannot readily determine whether these foreign establishments are in compliance with such laws. The agency also lacks sufficient information to make a finding, under section 510(g)(5) of the act, that registration by such foreign establishments is not

necessary to protect the public health. However, it is unlikely that many foreign pharmacies, hospitals, clinics, or public health agencies export or offer to export drugs or devices to the United States, so few of these foreign establishments should be subject to the registration requirement. Those that do export to the United States should be in FDA's inventory of registered foreign establishments for the efficient administration and enforcement of the act.

4. Section 207.20—Who Must Register and Submit a Drug List

Section 207.20(a) currently requires ''owners and operators of all drug establishments, not exempt under section 510(g) of the act or subpart D of this part 207, that engage in the manufacture, preparation, propagation, compounding, or processing of a drug or drugs'' to register and list every drug in commercial distribution. The rule also states that owners and operators must register and list every drug in commercial distribution ''whether or not the output of such establishment or any particular drug so listed enters interstate commerce * * *.'' However, under the current rule, drug listing is not required ''at this time for the manufacturing, preparation, propagation, compounding, or processing of an animal feed (including a Type B and Type C medicated feed) bearing or containing an animal drug * * *.''

The proposed rule would amend § 207.20(a) to clarify that the exemptions are under section 510(g) of the act or subpart B (''Exemptions'') of part 207. The agency is making this change because the proposed rule would place all exemptions in subpart B of part 207 and would remove all exemptions from subpart D.

The proposal would also revise § 207.20(a) so that the language requiring owners and operators to register their establishments and to list drugs, whether or not the output of the establishment or any particular drug so listed enters interstate commerce, would apply only to domestic firms. FDA is proposing this change because the agency has no intent to require foreign establishments to list drugs that do not enter interstate commerce by being imported or offered for import into the United States.

The proposal would also make two minor amendments to § 207.20(a). The proposed rule would delete the phrase ''at this time'' because the phrase is unnecessary. The proposal would also move the parenthetical language referring to Type B and Type C medicated feed so that it refers accurately to animal feeds bearing or containing an animal drug rather than to animal feeds generally and revise the parenthetical language so that it refers to Type B ''or'' Type C medicated feed. This would eliminate any misconception that the product be both a Type B and Type C medicated feed.

Additionally, FDA notes that § 207.20(a), as currently written, permits a company to submit listing information on behalf of a parent, subsidiary, and/or affiliate company for all establishments when operations are conducted at more than one establishment and there exists joint ownership and control among all the establishments. FDA interprets this provision, and similar provisions at §§ 607.20(a) and 807.20(a), as including foreign establishments so long as operations are conducted at more than one establishment and there exists joint ownership and control among all the establishments.

The proposed rule would also add ''abbreviated new drug applications'' and ''abbreviated new animal drug applications'' to the list of marketing applications in § 207.20(c). FDA is proposing these actions because such applications, which were created by the Drug Price Competition and Patent Term Restoration Act and the Generic Animal Drug and Patent Term Restoration Act, are marketing applications that require a registered establishment. These applications were inadvertently omitted from previous rulemakings amending part 207. (The agency notes that, in the **Federal Register** of July 31, 1998 (63 FR 40858), it published a proposed rule that would eliminate establishment and product licenses and implement biologics licenses.)

5. Section 207.21—Times for Registration and Drug Listing

Section 207.21 currently describes when establishments should register and submit listing information and states that an owner or operator of an establishment that has just begun manufacturing or processing drugs should register within 5 days after submitting a new drug application, new animal drug application, medicated feed application, antibiotic application, or an establishment license application to manufacture a biological product. (The agency notes that, in the **Federal Register** of July 31, 1998 (63 FR 40858), it published a proposed rule that would eliminate establishment and product licenses and implement biologics licenses.)

The proposed rule would add ''abbreviated new drug applications'' and ''abbreviated new animal drug applications'' to the list of marketing applications in § 207.21. As stated earlier, these applications were inadvertently omitted from previous rulemakings amending part 207.

6. Section 207.25—Information Required in Registration and Drug Listing

Section 207.25(b)(2) currently requires the numbers for various marketing applications to be included in the drug listing information submitted to the agency. For example, if a new drug application were assigned number 20–570, the application number that would be included in the drug listing information would be NDA 20–570.

The proposed rule would add abbreviated new animal drug applications to the list of marketing applications in § 207.25. As stated earlier, this action is necessary because abbreviated new animal drug applications were inadvertently omitted from previous rulemakings amending part 207.

7. Section 207.37—Inspection of Registrations and Drug Listings

Section 207.37(a) currently states where copies of registration forms filed by establishments are available for inspection. In general, the forms are available at the Center for Drug Evaluation and Research and at FDA district offices.

The proposed rule would amend § 207.37(a) to update the addresses in the Center for Drug Evaluation and Research and would state that copies of registration forms submitted by foreign establishments are available for inspection at the Office of Compliance in the Center for Drug Evaluation and Research. Copies of forms submitted by domestic establishments would continue to be available for inspection at FDA district offices and at the Office of Compliance in the Center for Drug Evaluation and Research.

The proposal would also update the addresses in § 207.37(b).

8. Section 207.40—Drug Listing Requirements for Foreign Drug Establishments

Section 207.40 currently requires foreign drug establishments to comply with drug listing requirements and prohibits the importation of drugs that are not listed (except for investigational drugs). It also requires foreign establishments to submit drug listing information in English and to provide the name and address of the

establishment and the person responsible for submitting the drug listing information.

Proposed § 207.40(a) would revise the existing language to require foreign establishments whose drugs are imported or offered for import into the United States to comply with the establishment registration and listing requirements in subpart C (''Procedures for domestic drug establishments''), unless exempt under subpart B (''Exemptions''). The proposal would expressly require foreign establishments to register as required by section 510(i)(1) of the act.

Proposed § 207.40(b) would prohibit the importation of drugs from unregistered foreign establishments, in addition to prohibiting the importation of unlisted drugs. This action is consistent with several provisions of the act. Section 301(p) of the act (21 U.S.C. 331(p)) considers a foreign establishment's failure to register or to submit listing information to be a prohibited act. Section 501(a)(2)(B) of the act (21 U.S.C. 351(a)(2)(B)) considers a drug to be adulterated if the methods used in or the facilities or controls used for the drug's manufacture, processing, packing, or holding do not conform to current good manufacturing practice (CGMP). Additionally, under section 801(a) of the act (21 U.S.C. 381(a)), FDA may refuse to admit into the United States drugs that appear to be: (1) Manufactured, processed, or packed under insanitary conditions; (2) forbidden or restricted in sale in the country in which they are produced or from which they are exported; or (3) adulterated, misbranded, or in violation of section 505 of the act (21 U.S.C. 355). Here, if a foreign establishment fails to register (thereby engaging in a prohibited act), it is likely that FDA has not inspected the establishment. As a result, FDA would be unable to determine whether that foreign establishment meets CGMP. Consequently, drugs from such unregistered establishments would appear to be adulterated under section 801(a)(3) of the act. Therefore, to enforce sections 301(p), 501(a), and 801(a) of the act effectively, in conjunction with section 510(i) of the act as it pertains to foreign establishment registration, the agency is proposing to amend § 207.40(b) to prohibit the importation of drugs that are not manufactured, prepared, propagated, compounded, or processed at a registered foreign establishment.

Moreover, this interpretation is consistent with the purpose of the registration provision as originally enacted in 1962. While the FDAMA legislative history is virtually silent on the purpose of foreign registration, the Drug Amendments of 1962 make clear the connection between registration and factory inspection. The Drug Amendments amended the act to include, among other things, a registration provision requiring domestic drug establishments to register and authorizing foreign establishments to register, and a ''current good manufacturing practice'' provision which now appears at section 501(a)(2)(B) of the act. According to the Senate Report accompanying the amendments, the purpose of the registration provision is

> to assist the [FDA] to identify and inspect all places where drugs are being made, and to take appropriate action * * * against those who fail to register * * * The committee believes that drugs should not be on the market unless the [FDA] knows who is making them, and where they are being made, and is able to inspect the facilities in which they are being made. This will help to stop illicit and substandard manufacturers who do not follow the methods or establish the controls called for by good manufacturing practice. The registration system * * * is thus a facet of * * * the provisions on quality manufacturing controls * * *.''

S. Rept. 87–1744 (1962), reprinted in 1962 U.S.C.C.A.N., 2884, 2888–89. Therefore, the agency believes that the act supports a prohibition on importation of drugs manufactured by unregistered establishments.

FDA acknowledges that section 502(o) of the act (21 U.S.C. 352(o)) considers a drug to be misbranded if the drug was manufactured, prepared, propagated, compounded, or processed in an establishment that is not registered in any State and that FDAMA did not amend section 502(o) of the act to include language describing a similar restriction on drugs from unregistered foreign establishments. Nevertheless, as explained above, FDA has sufficient legal authority to prohibit the importation of drugs from unregistered foreign establishments, as a regulation for the efficient enforcement of the act under section 701(a) of the act (21 U.S.C. 371(a)), and such a prohibition would give foreign establishments, like their domestic counterparts, an incentive to register.

Proposed § 207.40(b) would also require foreign establishments to submit registration and listing information, including labels and labeling, in English. This would be consistent with the existing provision which requires that listing information be submitted in the English language.

Section 207.40(c) currently requires every foreign drug establishment to submit, as part of its drug listing, the establishment's name and address and the name of the individual responsible for submitting the listing information. It also directs the foreign establishment to report any changes at specified intervals.

The proposed rule would revise § 207.40(c) to require each foreign establishment to submit the name, address, and phone number of its United States agent as part of the establishment's initial and updated registration information. As stated earlier, FDA interprets section 510(i) of the act as allowing for only one United States agent for each foreign establishment and providing a foreign establishment the discretion to choose either an individual person or entity to serve as its United States agent. Some establishments may prefer to select a company or firm as the United States agent rather than depend on a single person, and so proposed § 207.40(c) would allow an entity to be the United States agent.

Proposed § 207.40(c) would also require a foreign establishment to report changes in the United States agent's name, address, or phone number to FDA within 5 days of the change and would require each foreign establishment to designate only one United States agent. In drafting this provision, FDA considered allowing such changes to be reported either by the foreign establishment or by the United States agent because, on rare occasions, the agency has contacted individuals whom establishments had identified as their agent or representative only to find that the individual had terminated its relationship with the establishment or was unaware that the establishment had designated the individual as its representative. Although the proposal would permit only establishments to report changes in the United States agent's name, address, or phone number, the agency invites comments as to whether the rule should permit the United States agent to report such changes as well.

Additionally, proposed § 207.40(c) would require the United States agent to reside or maintain a place of business in the United States, and, upon request from FDA, to assist FDA in communications with the foreign drug establishment, to respond to questions about the establishment's products that are imported or offered for import into the United States, and to assist FDA in scheduling inspections of the foreign drug establishment. For example, in the event of a product recall, the agency might ask the United States agent about the product's distribution in the United

States in order to facilitate the recall (although, in many instances, FDA will either have information on the imported product's distribution or be able to acquire such information from other government agencies so as to reduce the need to contact the United States agent on such matters). The agency is proposing these requirements because its experience indicates that communications with foreign establishments are much better and problems or concerns are resolved much faster when the agency can work with a person residing or maintaining a place of business in the United States.

FDA considered, but did not propose, a requirement that the United States agent possess sufficient knowledge of English to facilitate communications between FDA and the foreign establishment. The agency chose to omit such a requirement, in part, because the United States agent, by virtue of residing or maintaining a place of business in the United States, should be able to communicate in English or may be assumed to have sufficient knowledge of English. Should this assumption prove to be incorrect, FDA may revise the rule to require the United States agent to be able to communicate in English.

The proposal would also consider information or documents provided by FDA to the United States agent to be equivalent to providing the same information or documents to the foreign drug establishment. This provision would apply when the agency is unable to contact the foreign manufacturer directly or expeditiously, including (but not limited to) situations where FDA has been unsuccessful in contacting the foreign establishment directly because the establishment has moved, when FDA correspondence sent directly to the foreign establishment has been returned to the agency because the local postal authorities cannot locate the foreign establishment, or in emergencies. This proposed provision, however, suggests that foreign establishments should select their United States agent carefully. FDA is aware that some foreign establishments have multiple distributors in the United States, but sometimes select one distributor as the establishment's representative or agent. This may present a problem if FDA, under proposed § 207.40(c), sought to provide certain documents or information to a distributor-agent concerning products that might have been supplied to or actions taken by a different distributor. For example, foreign establishment ''A'' might have three distributors in the United States (distributors ''B,'' ''C,'' and ''D'') and have selected distributor B as its United States agent. If FDA, under proposed § 207.40(c), were to contact distributor B, in its capacity as the United States agent, about problems associated with a particular import, such contact might inadvertently present business concerns for the foreign establishment because distributor B might be unaware of other distributors in the United States or other products shipped to the United States, or FDA might be unaware that the information concerned a product that had not been shipped to distributor B. Distributor B also might not relay the information from FDA to the foreign establishment if the failure to relay the information would confer a competitive advantage to itself.

Contact between FDA and a United States agent might also present issues involving trade secrets or confidential commercial information. For example, section 301(j) of the act, with few exceptions, prohibits the agency from disclosing trade secrets. Yet there may be instances where the agency needs to discuss information which may involve trade secrets or confidential commercial information. If the agency is unable to contact the foreign manufacturer, it may not be permitted to discuss the information with the United States agent, even if a public health emergency exists.

Thus, FDA advises foreign establishments to choose their United States agents carefully in order to avoid any conflict of interest or confidentiality problems.

B. Proposed Changes to Part 607 (Human Blood and Blood Products)

1. Section 607.3—Definitions

a. *Definition of ''commercial distribution''.* Section 607.3(e) currently defines ''commercial distribution,'' in part, as ''any distribution of a blood product except pursuant to the investigational use provisions of part 312 of this chapter * * *.''

The proposal would add a new sentence to § 607.3(e) to state that, for foreign establishments, commercial distribution does not include distribution of any blood or blood product that is neither imported nor offered for import into the United States. This change is necessary because FDA does not intend to require foreign establishments to register or to list blood products that are not imported to or offered for import into the United States, consistent with the language of section 510(i)(1) of the act.

b. *Definition of ''United States agent''.* The proposed rule would define ''United States agent,'' in a new § 607.3(j), as ''any person residing or maintaining a place of business in the United States whom a foreign establishment designates as its agent.'' This definition, and FDA's interpretation of the definition, would be identical to those in proposed § 207.3(a)(11).

2. Section 607.7—Establishment Registration and Product Listing of Blood Banks and Other Firms Manufacturing Human Blood and Blood Products

Section 607.7(b) and (c) currently provide an address for the Center for Biologics Evaluation and Research from which registration forms may be obtained and to which they may be sent.

The proposed rule would amend § 607.7(b) and (c) to update the address.

3. Section 607.20—Who Must Register and Submit a Blood Product List

Section 607.20(a) currently states, in part, that an owner or operator of an establishment that engages in the manufacture of blood products must register and submit a list of every blood product in commercial distribution, ''whether or not the output of such blood product establishment or any particular blood product so listed enters interstate commerce.''

The proposal would revise § 607.20(a) so that the language requiring owners and operators to register their establishments and to list blood products whether or not the output of the establishment or any particular blood product so listed enters interstate commerce applies only to domestic firms. This change is consistent with proposed § 607.3(e).

4. Section 607.22—How and Where to Register Establishments and List Blood Products

Section 607.22 currently describes which forms should be used for registration and listing purposes and provides an address from which the forms may be obtained. Section 607.22(b) further states that listing information may be submitted on computer tapes.

The proposed rule would update FDA's addresses in § 607.22(a). The proposal would also amend § 607.22(b) to delete the language concerning tapes for computer input and the submission of proposed formats for FDA review and approval. FDA is proposing to delete this provision because it has never been used.

5. Section 607.25—Information Required for Establishment Registration and Blood Product Listing

Section 607.25(a), in describing FDA Form FD–2830, uses the words ''post office ZIP code.''

The proposal would revise § 607.25(a) to refer to a post office code. This change reflects the fact that many foreign countries do not use the term ''ZIP'' code.

6. Section 607.26—Amendments to Establishment Registration

Section 607.26 requires changes in individual ownership, ''corporate or partnership structure location or blood-product handling activity'' to be reported. This provision was intended to require, among other things, firms to report changes in corporate or partnership structure as well as changes in location, but was occasionally misinterpreted as applying solely to changes in location.

Consequently, the proposal would revise this language to read as ''Changes in individual ownership, corporate or partnership structure, location, or blood-product handling activity'' to clarify that changes in corporate or partnership structure or location or blood-product handling activity are to be reported.

7. Section 607.31—Additional Blood Product Listing Information

Section 607.31 describes additional information that FDA may require by letter, but states that the Commissioner will perform various actions, such as making a request or a finding, before requiring the additional information.

The proposal would substitute the ''Director of the Center for Biologics Evaluation and Research'' for the ''Commissioner'' throughout § 607.31(a) because the center director, rather than the Commissioner, performs those functions.

The proposal would also delete the text in § 607.31(b) pertaining to the voluntary reporting of information on the quantity of blood product distributed. FDA is proposing to delete the text in paragraph (b) because the form specified in the rule, Form FD–2831 (Blood Establishment Resource Summary), is obsolete, and the provision has not been used.

8. Section 607.35—Notification of Registrant; Blood Product Establishment Registration Number and NDC Labeler Code

Section 607.35(a) currently states that the Commissioner will provide a validated copy of form FD–2830 to the location shown for the registering establishment.

The proposal would amend § 607.35(a) to state that a copy will also be sent to the reporting official if that official is at another address. This would accommodate those employees or representatives who submit registration and listing information for an establishment but are not located at that establishment.

The proposal would also substitute the ''Director of the Center for Biologics Evaluation and Research'' for the ''Commissioner'' because the center director, rather than the Commissioner, performs that function.

9. Section 607.37—Inspection of Establishment Registrations and Blood Product Listings

Section 607.37 currently lists addresses where filed forms are available for inspection or where requests for information regarding blood establishment registration and listing should be sent.

The proposal would update the addresses.

10. Section 607.40—Establishment Registration and Blood Product Listing Requirements for Foreign Blood Product Establishments

Currently, § 607.40, entitled ''Blood product listing requirements for foreign blood product establishments,'' requires such establishments to comply with blood product listing requirements and prohibits the importation of most nonlisted blood products. The provision also requires foreign blood product establishments to submit listing information in English and, as part of their listing, to submit the name and address of the establishment and the name of the individual responsible for submitting the product listing information.

Proposed § 607.40(a) would require foreign establishments to comply with establishment registration requirements in addition to blood product listing requirements. To complement this change, the proposal would revise the title to § 607.40 to read as ''Establishment registration and blood product listing requirements for foreign blood product establishments.''

Proposed § 607.40(b) would enable FDA to prohibit the importation of blood products from unregistered foreign establishments, in addition to prohibiting the importation of unlisted blood products. This prohibition would be similar to proposed § 207.40(b) because blood and blood products are ''drugs'' within the meaning of section 201(g) of the act. As stated earlier, the prohibition is consistent with sections 301(p), 501(a), and 801(a) of the act because, if a foreign establishment fails to register, FDA will be unable to determine, through an establishment inspection, whether that foreign establishment meets CGMP. Consequently, blood and blood products from those establishments would appear to be adulterated under section 801(a)(3) of the act. Therefore, to enforce sections 301(p), 501(a), and 801(a) of the act effectively, in conjunction with section 510(i) of the act as it pertains to foreign establishment registration, proposed § 607.40(b) would prohibit the importation of blood products that are not manufactured, prepared, propagated, compounded, or processed at a registered foreign establishment.

Proposed § 607.40(b) would also add establishment registration information to types of information that must be submitted in the English language.

Proposed § 607.40(c) would require foreign blood product establishments to submit the name and address of the establishment and the name of the individual responsible for submitting the establishment registration and product listing information as part of the establishment registration and blood product listing. Proposed § 607.40(c) would also require foreign establishments to report any changes in their registration or listing information.

Proposed § 607.40(d) would require each foreign blood product establishment to submit the name, address, and phone number of its United States agent as part of its initial and updated registration information. Each foreign blood product establishment would be permitted to designate only one United States agent. Similar to proposed § 207.40(c), proposed § 607.40(d) would require the United States agent to reside or maintain a place of business in the United States, and, upon request from FDA, assist FDA in communications with the foreign establishment, respond to questions concerning imported products, and assist FDA in scheduling inspections. Proposed § 607.40(d) would also enable FDA, when it is unable to contact the foreign manufacturer directly or expeditiously, to provide information or documents to the United States agent and for that act to be considered equivalent to providing the same information or documents to the foreign establishment. Changes to the United States agent's name, address, or phone number would, under proposed § 607.40(d), be reported to FDA within 5 days of the change.

11. Section 607.65—Exemptions for Blood Product Establishments

Section 607.65 lists several classes of persons who are exempt from registration and blood product listing under part 607. These exemptions, which currently pertain only to domestic establishments, reflect the statutory exemptions in section 510(g) of the act or represent a finding by the agency that registration of such persons is not necessary for the protection of the public health. For example, § 607.65(c) exempts persons who manufacture blood products solely for use in research, teaching, or analysis. This exemption is consistent with section 510(g)(3) of the act. Section 607.65(d) exempts carriers who receive, carry, hold, or deliver blood products in their usual course of business, while § 607.65(e) exempts persons who engage solely in the manufacture of in vitro diagnostic blood products and reagents that are not subject to licensing under section 351 of the Public Health Service Act (42 U.S.C. 262). FDA created the exemption in § 607.65(d) because registering these persons was not necessary to protect the public health, whereas the exemption in § 607.65(e) exists because nonlicensed, in vitro diagnostic establishments are subject to registration under part 807 instead of part 607.

The proposed rule would amend § 607.65 so that paragraphs (c), (d), and (e) would apply to both foreign and domestic persons or establishments. Foreign persons or establishments would not be included in the remaining exemptions in § 607.65 because those exemptions depend on compliance with Federal, State, or local laws in the United States and its territories and because FDA has insufficient information to make a finding, under section 510(g)(5) of the act, that registration by such foreign establishments is not necessary to protect the public health. For example, § 607.65(a) pertains to pharmacies operating under applicable local laws, while § 607.65(b) pertains to practitioners licensed by law. Notwithstanding the proposed rule's limitation of these exemptions to pharmacies and practitioners in the United States and its territories, few foreign pharmacies or foreign practitioners are expected to be importing or offering for import blood and blood products into the United States, so they would not be subject to the foreign establishment registration requirement. As with the similar requirement in proposed § 207.10, those that do import or offer to import such products to the United States should register to allow FDA to carry out its oversight responsibilities in this area. Similarly, § 607.65(f) (transfusion services that are part of a facility approved for Medicare reimbursement) and § 607.65(g) (clinical laboratories approved for Medicare reimbursement) both involve establishments approved for Medicare reimbursement; the agency does not anticipate that many foreign establishments are approved for Medicare reimbursement. Consequently, FDA is not proposing to extend these exemptions to foreign establishments and does not anticipate that many foreign transfusion services or clinical laboratories will be subject to the statutory registration requirement.

C. Proposed Changes to Part 807 (Devices)

1. Section 807.3—Definitions

a. *Definition of ''commercial distribution''*. Section 807.3(b) currently defines ''commercial distribution,'' in part, as ''any distribution of a device intended for human use which is held or offered for sale * * *.''

Similar to the proposed changes to §§ 207.3 and 607.3, the proposed rule would create a new § 807.3(b)(4) to state that, for foreign establishments, commercial distribution does not include distribution of a device that is neither imported nor offered for import into the United States.

b. *Definition of ''United States agent''*. Currently, § 807.3(r) defines a ''U.S.-designated agent'' as a person, residing in the United States, who is ''designated and authorized by the owner or operator of a foreign manufacturer who exports devices into the United States'' and who is responsible for submitting medical device reports and annual certifications, acting as the official correspondent, and submitting registration and listing information and premarket notifications. In the **Federal Register** of July 23, 1996 (61 FR 38345), FDA stayed the effective date for this and other provisions in part 807 (and elsewhere) that mention a U.S.-designated agent.

The proposed rule would revise § 807.3(r) to define a ''United States agent'' as ''any person residing or maintaining a place of business in the United States whom a foreign establishment designates as its agent.'' As stated earlier, FDA interprets the statutory requirement of a United States agent as allowing for only one United States agent for each foreign establishment and providing a foreign establishment the discretion to choose either an individual person or entity to serve as its United States agent.

Additionally, unlike the existing provision, proposed § 807.3(r) would not prescribe any duties for the United States agent. Proposed § 807.40 would describe the United States agent's responsibilities and is discussed later in this document.

2. Section 807.20—Who Must Register and Submit a Device List

Section 807.20(a) currently requires an ''owner or operator of an establishment not exempt under section 510(g) of the act'' or subpart D of part 807 who is engaged in the manufacture, preparation, propagation, compounding, assembly, or processing of a device intended for human use to register and to submit listing information. It also states that an owner or operator shall register and list devices ''whether or not the output of the establishments or any particular device so listed enters interstate commerce.'' Section 807.20 also lists persons who are subject to the registration and listing requirements; one paragraph, at § 807.20(a)(6), refers to persons who act as the ''U.S.-designated agent.''

The proposal would amend § 807.20(a) to clarify that an owner or operator ''shall'' register and list (unless it is otherwise exempt from such requirements). The proposal would also clarify that the language requiring owners and operators to register their establishments and to list devices, even if the devices do not enter interstate commerce, applies only to domestic firms. FDA is proposing this change because the agency has no intent to require foreign establishments to list devices that are not imported or offered for import into the United States, consistent with the language in section 510(i)(1) of the act.

The proposal would also amend the heading of subpart B, ''Procedures for Domestic Device Establishments,'' to remove the word ''domestic.'' This would reflect the fact that the act's registration and listing requirements now apply both to domestic establishments and to foreign establishments whose devices are imported or offered for import into the United States.

The proposal would also delete § 807.20(a)(6) pertaining to persons acting as the U.S.-designated agent. This deletion would complement changes to §§ 807.3 and 807.40 (discussed below) which would give a foreign establishment discretion in defining most responsibilities of its United States agent.

3. Section 807.25—Information Required or Requested for Establishment Registration and Device Listing

Section 807.25 currently states that FDA Forms FD–2891 and 2891(a) are the approved forms for establishment registration and device listing and that the required information includes ''post office ZIP Code.''

The proposal would change this to read as ''post office code'' because the term ''ZIP Code'' is not used in many foreign countries.

4. Section 807.40—Establishment Registration and Device Listing for U.S. Agents of Foreign Establishments

Currently, § 807.40 requires foreign device manufacturers who export devices to the United States to designate a person as a ''U.S.-designated agent.'' The U.S.-designated agent is responsible for duties such as submitting medical device reports, submitting annual certifications, acting as the manufacturer's official correspondent, and submitting registration and listing information and premarket notifications. The rule also directs foreign manufacturers to provide a statement of authorization for the U.S.-designated agent to FDA. However, in the **Federal Register** of July 23, 1996 (61 FR 38345), FDA stayed the effective date of this provision.

The proposal would delete the existing language in § 807.40 entirely and replace it with general descriptions of the foreign establishment's obligations and the United States agent's role. The proposal would also use the term ''foreign establishment,'' rather than ''foreign manufacturer,'' and revise the heading of § 807.40 to be more consistent with section 510 of the act.

Proposed § 807.40(a) would require any foreign establishment engaged in the manufacture, preparation, propagation, compounding, or processing of a device that is imported or offered for import into the United States to register and list its devices in conformance with subpart B (''Procedures for Device Establishments''). This would have foreign establishments comply with the same procedures as domestic establishments.

The proposal would also require the official correspondent for the foreign establishment to facilitate communication between the establishment's management and FDA. This change complements the requirement for an official correspondent in § 807.25(d).

Proposed § 807.40(b) would require each registered foreign establishment to submit the name, address, and phone number of its United States agent as part of its registration information. Under the proposal, each foreign establishment would be able to designate only one United States agent. The proposal would also require the agent to reside or maintain a place of business in the United States, but would allow (rather than require) a foreign establishment to designate its United States agent as its official correspondent. Designating the United States agent as the official correspondent may be more efficient than having a separate United States agent and an official correspondent, but the proposed rule would give foreign establishments flexibility in deciding how to allocate their resources in this area and what the United States agent's responsibilities would be.

FDA notes that electronic product manufacturers, under § 1005.25 (21 CFR 1005.25), must designate a permanent resident of the United States as the manufacturer's agent upon whom service of process may be made for and on behalf of the manufacturer as provided in section 360(d) of the Radiation Control for Health and Safety Act of 1968. Manufacturers of products that are both medical devices and electronic products, therefore, may wish to consider whether their agents, under § 1005.25, can also serve as their United States agent under proposed § 807.40 and perform the duties expected of a United States agent.

Like proposed §§ 207.40 and 607.40, proposed § 807.40(b) also would require the United States agent, upon request from FDA, to assist the agency in communications with the foreign establishment, to respond to questions regarding devices imported or offered for import, and to assist FDA in scheduling inspections of the foreign establishment. Proposed § 807.40(b) would also enable FDA, when it is unable to contact the foreign manufacturer directly or expeditiously, to provide information or documents to the United States agent and for that act to be considered equivalent to providing the same information or documents to the foreign establishment, and would further require a foreign establishment to report to FDA changes in the United States agent's name, address, or phone number within 5 days of the change.

Proposed § 807.40(c), like proposed §§ 207.40(b) and 607.40(b), would prohibit the importation of devices that have not been listed or manufactured, prepared, propagated, compounded, or processed at a registered foreign establishment. This provision is consistent with the act in several respects. Under section 502(o) of the act, a device that is not included in a list is misbranded, and section 801(a)(3) of the act authorizes FDA to refuse admission of misbranded articles. Additionally, prohibiting imports from unregistered foreign establishments is consistent with sections 301(p), 501(h), and 801(a) of the act because, if a foreign establishment fails to register, FDA will be unable to determine whether that foreign establishment meets the requirements of the CGMP/quality systems regulation. (Section 501(h) of the act considers a device to be adulterated if the device and the methods used in, or the facilities or controls used for, the device's manufacture, packing, storage, or installation are not in conformity with CGMP.) Consequently, to enforce sections 301(p), 501(h), and 801(a) of the act effectively, in conjunction with section 510(i) of the act as it pertains to foreign establishment registration, proposed § 807.40(c) would prohibit the importation of devices that are not manufactured, prepared, propagated, compounded, or processed at a registered foreign establishment. Such a requirement is therefore authorized under section 701(a) of the act for the efficient enforcement of the act.

D. Other Rules Affecting Establishment Registration and Listing

The proposed rule would also revise the authority citations for parts 207 and 807 to be consistent with other regulations published by the agency in the **Federal Register** of May 13, 1998 (63 FR 26690) and May 14, 1998 (63 FR 26744). The former would amend various FDA regulations to delete references to the certification of insulin and to section 506 of the act (which was repealed by FDAMA), while the latter would require establishment registration and listing for manufacturers of human cellular and tissue-based products.

The proposal would also add sections 201, 801, and 903 of the act (21 U.S.C. 393) to the authority citation for parts 207, 607, and 807. Section 201 of the act contains definitions, such as the definition of a ''State,'' and some definitions are relevant to these regulations. Section 801 of the act provides authority over imports, whereas section 903 of the act establishes, among other things, FDA's mission and interagency collaboration obligations.

The proposal would further revise the authority citation for part 607 by deleting the citation for 42 U.S.C. 216, and adding 42 U.S.C. 264 and 271. The former provision concerns regulatory authority relating to commissioned corps members and is therefore

inapplicable to part 607, whereas the latter provisions provide authority to issue regulations to control communicable disease and establish penalties for violation of quarantine laws.

E. Registration Schedules

Because part 207 applies to human drugs, animal drugs, and some biologics, FDA intends to develop a staggered schedule for foreign establishment registration. In general, the registration schedule would be similar in concept to § 207.21 whereby firms whose name began with a particular letter of the alphabet would register within a specific month. For example, a firm whose name began with the letter ''a'' or ''b'' might be requested to register by January, whereas a firm whose name began with the letter ''c'' might be requested to register by February. The precise dates, however, may depend upon the date on which FDA publishes a final rule in the **Federal Register**. Therefore, FDA intends to announce the schedule for foreign establishment registration for firms subject to part 207 in the preamble to the final rule.

Comparatively fewer foreign manufacturers are subject to the registration requirements in parts 607 and 807. Consequently, the agency does not intend to develop any special registration schedules for parts 607 and 807.

III. Analysis of Impacts

FDA has examined the impacts of the proposed rule under Executive Order 12866 and the Regulatory Flexibility Act (5 U.S.C. 601–612). Executive Order 12866 directs agencies to assess all costs and benefits of available regulatory alternatives and, when regulation is necessary, to select regulatory approaches that maximize net benefits (including potential economic, environmental, public health and safety, and other advantages; distributive impacts; and equity). The agency believes that this proposed rule is consistent with the principles set out in the Executive Order. In addition, the proposed rule is a significant regulatory action as defined in Executive Order 12866.

The Regulatory Flexibility Act requires agencies to analyze regulatory options that would minimize any significant economic impact of a rule on small entities. FDA believes that the proposed rule will not have a significant economic impact on a substantial number of small entities, but has conducted an initial regulatory flexibility analysis to ensure that impacts on small entities were assessed and to alert any potentially impacted small entities to the opportunity to submit comments to FDA.

The proposed rule would require foreign establishments that import or offer for import human drugs, animal drugs, biologics, blood, blood products, and devices into the United States to register and to identify a United States agent. Before FDAMA amended section 510 of the act to require foreign establishment registration, many foreign establishments voluntarily registered their establishments, but all foreign establishments that imported or offered for import drugs, blood and blood products, and devices into the United States were required to list their products. The registration and listing activities used forms prepared by FDA. (FDA plans to revise these forms in the future to provide for the identification of a United States agent by foreign establishments.)

Because foreign establishments were (and still are) required to list their products, FDA can estimate the number of foreign establishments that would be required to register under the proposed rule. However, because all of these establishments are outside the United States, FDA is unable to estimate accurately the number of foreign establishments that would be considered small entities and the extent to which these foreign establishments conduct business in the United States.

Nevertheless, FDA is able to estimate the proposed rule's economic impact by using time and cost estimates for registration. FDA estimates the costs associated with establishment registration are small, ranging from $20 per hour for device establishments, $25 per hour for blood and blood product establishments, and $100 per hour for drug establishments. These costs are based on information obtained primarily from domestic establishments, and FDA is assuming that the average costs for foreign establishments will be similar. FDA also estimates that completing an establishment registration form will range from 15 minutes to 1 hour (depending on the form used). These estimates are derived from the estimated registration costs for domestic establishments and foreign establishments that voluntarily registered before FDAMA's enactment. Thus, the proposed rule, if finalized, should not have a significant economic impact on a substantial number of small entities.

The agency examined, but rejected, alternatives to the proposed rule. The registration information required by FDA in the proposal is minimal, consisting largely of the establishment's address, names of owners or responsible officials, and additional identifying information on the establishment (such as type of establishment, types of products at the establishment, type of ownership). Similarly, identification of the United States agent would require minimal information (name, address, phone number). An alternative that required less information from foreign establishments would not provide sufficient information to identify the foreign establishment's location, a responsible person at the foreign establishment, or the type of establishment, thereby complicating any effort to locate or contact the foreign establishment or to determine whether the foreign establishment complied with the appropriate statutory and regulatory requirements. An alternative that required less frequent reporting by foreign establishments was rejected because it would increase the likelihood that the information possessed by FDA would be incorrect or obsolete and hinder the conduct of regulatory actions involving foreign establishments.

The Unfunded Mandates Reform Act (Pub. L. 104–114) requires that agencies prepare an assessment of anticipated costs and benefits before proposing any rule that may result in an expenditure in any 1 year by State, local, and tribal governments, in the aggregate, or by the private sector, of $100 million or more (adjusted annually for inflation). FDA estimates that the reporting costs for industry under the proposed rule would total $809,820. This estimate is based on annual projections of 4,160.5 hours for drug industry reports, 108.5 hours for blood and blood product reports, and 15,664 hours for device reports, multiplied by hourly industry costs of $100, $20, and $25 per report respectively. The estimated recordkeeping cost to industry is $810,000, based on an estimated 32,400 records at $25 per hour. Thus, because the total expenditures under the proposal will not result in a 1-year expenditure of $100 million or more, FDA is not required to perform a cost-benefit analysis under the Unfunded Mandates Reform Act.

IV. Environmental Impact

The agency has determined, under 21 CFR 25.30(h), that this action is of a type that does not individually or cumulatively have a significant effect on the human environment. Therefore, neither an environmental assessment nor an environmental impact statement is required.

V. Paperwork Reduction Act of 1995

This proposed rule contains information collection provisions that are subject to public comment and review by OMB under the Paperwork Reduction Act of 1995 (44 U.S.C. 3501–3520). The title, description, and respondent description for the information collection requirements are shown below with an estimate of the annual reporting and recordkeeping burden. Included in the estimate is the time for reviewing instructions, searching existing data sources, gathering and maintaining the data needed, and completing and reviewing each collection of information.

FDA invites comments on: (1) Whether the proposed collection of information is necessary for the proper performance of FDA's functions, including whether the information will have practical utility; (2) the accuracy of FDA's estimate of the burden of the proposed collection of information, including the validity of the methodology and assumptions used; (3) ways to enhance the quality, utility, and clarity of the information to be collected; and (4) ways to minimize the burden of the collection of information on respondents, including through the use of automated collection techniques, when appropriate, and other forms of information technology.

Title: Foreign Establishment Registration and Listing.

Description: The proposed rule would require foreign establishments that import or offer to import human drugs, animal drugs, biologics, blood products, and devices into the United States to register and to name a United States agent. This information is required by section 510(i)(1) of the act, as amended by section 417 of FDAMA.

Although section 510(i)(2) of the act also requires foreign establishments to list their products at FDA, the proposed rule does not include such a requirement because FDA's existing regulations already require foreign manufacturers to submit such lists, and the agency has already obtained OMB approval for the information collection burden associated with product listing for parts 207 and 607 (for part 207, the OMB approval number is 0910–0045 and expires on April 30, 2001; for part 607, the OMB approval number is 0910–0052 and expires on April 30, 2000). Through this notice, FDA is also seeking approval for the device listing requirements insofar as they will be applied to foreign establishments.

Description of Respondents: Persons and businesses, including small businesses.

FDA estimates the burden of this collection of information as follows:

TABLE 1.—Estimated Annual Reporting Burden[1]

21 CFR Section	No. of Respondents	No. of Responses per Respondent	Total Annual Responses	Hours per Response	Total Hours
207.21(a)	2,463	1	2,463	0.5	1,231.5
207.22(a) and 207.40	5,630	1	5,630	0.5	2,815
207.25(b)	53	4.8	228	0.5	114
607.22(a) and 607.40	98	1	98	1	98
607.26	1	1	1	0.5	0.5
607.31	1	1	1	10	10
807.22(a) and 807.40	7,200	1	7,200	0.25	1,800
807.22(b)	27,720	1	27,720	0.5	13,860
807.31(e)	7	1	7	0.5	4
Total					19,933

[1]There are no capital costs or operating and maintenance costs associated with this collection of information.

TABLE 2.—Estimated Annual Recordkeeping Burden[1]

21 CFR Section	No. of Recordkeepers	No. of Records per Recordkeeper	Total Annual Records	Hours per Record	Total Hours
807.31	6,480	10	64,800	0.5	32,400
Total					32,400

[1]There are no capital costs or operating and maintenance costs associated with this collection of information.

In general, FDA based the above estimates on the number of foreign establishments that currently list drugs, blood products, or devices (as required by existing FDA regulations) and on comparable burden hour estimates for registration by domestic establishments. Accordingly, FDA's estimate of 30 minutes for each initial drug report (§ 207.22), 1 hour for each initial biologic report (§ 607.22), 45 minutes for each device report (§ 807.22), and 30 minutes for each additional report submitted (§ 807.31) is consistent with current practices.

For proposed §§ 207.21(a) and 207.25(b), the agency estimated the number of respondents submitting ANDA's or ANADA's from the number of establishments submitting listing information. For proposed § 207.21(a), FDA's drug listing records indicate that there are 2,410 firms submitting ANDA's and 53 firms submitting ANADA's, for a total of 2,463 respondents. The proposed rule would amend § 207.25(b) to include ANADA's, and FDA records indicate that 228 ANADA's were submitted; consequently, the total number of respondents is 53, with a total of 228 annual responses. The estimated total annual responses and hours per response are consistent with existing figures for other establishments subject to §§ 207.21 and 207.25.

For proposed §§ 607.26 and 607.31, FDA's experience reveals that only one establishment has reported information under these provisions in recent years. Therefore, the agency assigned an estimate of one respondent for each provision. The agency estimated the burden hours for these provisions by examining their complexity. Because proposed § 607.26 would require reporting changes in individual

ownership, corporate or partnership structure, location, or blood-product handling activity, the agency assigned 30 minutes as the reporting burden. In contrast, § 607.31 authorizes the agency to request additional information by letter. FDA has made no requests in recent years, but has assigned 10 hours as a reporting burden for this provision.

The estimated recordkeeping burden for proposed § 807.31 is based on FDA's experience with foreign device establishments. FDA's experience indicates that there are approximately 9 owners or operators for every 10 foreign device establishments. Consequently, the estimated number of recordkeepers is 6,480 (7,200 x 0.9 = 6,480), and the average frequency and average burden per record, based on comparable figures for domestic establishments, are 10 and 30 minutes respectively. This results in a total recordkeeping burden of 32,400 hours (6,480 recordkeepers x 10 records per recordkeeper x 0.5 hours per record = 32,400 hours).

In compliance with section 3507(d) of the Paperwork Reduction Act of 1995 (44 U.S.C. 3507(d)), the agency has submitted the information collection requirements of this proposed rule to OMB for review. Interested persons are requested to send comments regarding information collection by June 14, 1999, to the Office of Information and Regulatory Affairs, OMB, New Executive Office Bldg., 725 17th St. NW., Washington, DC 20503, Attn: Wendy Taylor, Desk Officer for FDA.

List of Subjects

21 CFR Part 207

Drugs, Reporting and recordkeeping requirements.

21 CFR Part 607

Blood.

21 CFR Part 807

Confidential business information, Imports, Medical devices, Reporting and recordkeeping requirements.

Therefore, under the Federal Food, Drug, and Cosmetic Act and under authority delegated to the Commissioner of Food and Drugs, it is proposed that 21 CFR parts 207, 607, and 807 be amended as follows:

PART 207—REGISTRATION OF PRODUCERS OF DRUGS AND LISTING OF DRUGS IN COMMERCIAL DISTRIBUTION

1. The authority citation for part 21 CFR part 207 is revised to read as follows:

Authority: 21 U.S.C. 321, 331, 351, 352, 355, 360, 360b, 371, 374, 381, 393; 42 U.S.C. 262, 264, 271.

2. Section 207.3 is amended by revising paragraph (a)(5) and by adding paragraph (a)(11) to read as follows:

§ 207.3 Definitions.

(a) * * *

(5) *Commercial distribution* means any distribution of a human drug except for investigational use under part 312 of this chapter, and any distribution of an animal drug or animal feed bearing or containing an animal drug for noninvestigational uses, but the term does not include internal or interplant transfer of a bulk drug substance between registered establishments within the same parent, subsidiary, and/or affiliate company. For foreign establishments, the term ''commercial distribution'' shall have the same meaning except that the term shall not include distribution of any drug that is neither imported nor offered for import into the United States.

* * * * *

(11) *United States agent* means a person residing or maintaining a place of business in the United States whom a foreign establishment designates as its agent.

* * * * *

3. Section 207.7 is amended by revising paragraph (a) to read as follows:

§ 207.7 Establishment registration and product listing for human blood and blood products and for medical devices.

(a) Owners and operators of human blood and blood product establishments shall register and list their products with the Center for Biologics Evaluation and Research (HFM–375), Food and Drug Administration, 1401 Rockville Pike, suite 200N, Rockville, MD 20852–1448, on Form FDA–2830 (Blood Establishment Registration and Product Listing), in accordance with part 607 of this chapter. Such owners and operators who also manufacture or process other drug products at the same establishment shall, in addition, register and list all such other drug products with the Drug Listing Branch in accordance with this part.

* * * * *

4. Section 207.10 is amended by revising the section heading and the introductory text to read as follows:

§ 207.10 Exemptions for establishments.

The following classes of persons are exempt from registration and drug listing in accordance with this part under section 510(g)(1), (g)(2), and (g)(3) of the act, or because FDA has found, under section 510(g)(5), that their registration is not necessary for the protection of the public health. The exemptions in paragraphs (a) and (b) of this section are limited to pharmacies, hospitals, clinics, and public health agencies located in any State as defined in section 201(a)(1) of the act.

* * * * *

5. Section 207.20 is amended by revising paragraphs (a) and (c) to read as follows:

§ 207.20 Who must register and submit a drug list.

(a) Owners or operators of all drug establishments, not exempt under section 510(g) of the act or subpart B of this part 207, that engage in the manufacture, preparation, propagation, compounding, or processing of a drug or drugs shall register and submit a list of every drug in commercial distribution (except that listing information may be submitted by the parent, subsidiary, and/or affiliate company for all establishments when operations are conducted at more than one establishment and there exists joint ownership and control among all the establishments). Drug listing is not required for the manufacturing, preparation, propagation, compounding, or processing of an animal feed bearing or containing an animal drug (i.e., a Type B or Type C medicated feed), nor is drug listing required for establishments engaged in drug product salvaging. Drug products manufactured, prepared, propagated, compounded, or processed in any State as defined in section 201(a)(1) of the act must be listed whether or not the output of such establishments or any particular drug so listed enters interstate commerce. No owner or operator may register an establishment if any part of the establishment is registered by any other owner or operator.

* * * * *

(c) Before beginning manufacture or processing of a drug subject to one of the following applications, an owner or operator of an establishment is required to register before the agency approves it: A new drug application, an abbreviated new drug application, a new animal drug application, an abbreviated new animal drug application, a medicated feed application, or a biologics license application.

* * * * *

§ 207.21 [Amended]

6. Section 207.21 *Times for registration and drug listing* is amended in the second sentence of paragraph (a) by adding the phrase ''abbreviated new drug application,'' after the phrase ''new drug application,'' and by adding the

phrase ''abbreviated new animal drug application,'' after the phrase ''new animal drug application,''.

§ 207.25 [Amended]

7. Section 207.25 *Information required in registration and drug listing* is amended in paragraph (b)(2) by adding the phrase ''abbreviated new animal drug application number,'' after the phrase ''new animal drug application number,''.

8. Section 207.37 is amended by revising the introductory text of paragraph (a) and by revising paragraph (b) to read as follows:

§ 207.37 Inspection of registrations and drug listings.

(a) A copy of the Form FDA–2656 (Registration of Drug Establishment) filed by the registrant will be available for inspection in accordance with section 510(f) of the act, at the Division of Labeling and Non-Prescription Drug Compliance (HFD–310), Office of Compliance, Center for Drug Evaluation and Research, Food and Drug Administration, 7520 Standish Pl., Rockville, MD 20855. In addition, copies of these forms for establishments located within a particular geographic area are available for inspection at FDA district offices responsible for that geographical area. Copies of forms submitted by foreign drug establishments are available for inspection at the Foreign Inspection Team (HFD–322), Office of Compliance, Center for Drug Evaluation and Research, Food and Drug Administration, 7520 Standish Pl., Rockville, MD 20855. Upon request and receipt of a stamped, self-addressed envelope, the Division of Labeling and Non-Prescription Drug Compliance, the Foreign Inspection Team, or the appropriate FDA district office will verify registration numbers or provide the location of a registered establishment.

* * * * *

(b) Requests for information about registrations and drug listings of an establishment should be directed to the Information Management Team (HFD–095), Office of Information Technology, Center for Drug Evaluation and Research, Food and Drug Administration, 5600 Fishers Lane, Rockville, MD 20857 or, with respect to the information described in paragraph (a) of this section, to the FDA district office responsible for the geographic area in which the establishment is located.

9. Section 207.40 is revised to read as follows:

§ 207.40 Establishment registration and drug listing requirements for foreign drug establishments.

(a) Foreign drug establishments whose drugs are imported or offered for import into the United States shall comply with the establishment registration and drug listing requirements in subpart C of this part, unless exempt under subpart B of this part.

(b) No drug, unless it is listed as required in subpart C of this part and manufactured, prepared, propagated, compounded, or processed at a registered foreign drug establishment, may be imported or offered for import into the United States except a drug imported or offered for import under the investigational use provisions in part 312 of this chapter. Foreign drug establishments shall submit all listing information, including labels and labeling, and registration information in the English language.

(c) Each foreign drug establishment required to register under paragraph (a) of this section shall submit the name, address, and phone number of its United States agent as part of its initial and updated registration information in accordance with subpart C of this part. Each foreign drug establishment shall designate only one United States agent.

(1) The United States agent shall reside or maintain a place of business in the United States.

(2) Upon request from FDA, the United States agent shall assist FDA in communications with the foreign drug establishment, respond to questions concerning the foreign drug establishment's products that are imported or offered for import into the United States, and assist FDA in scheduling inspections of the foreign drug establishment. If the agency is unable to contact the foreign drug establishment directly or expeditiously, FDA may provide information or documents to the United States agent, and such an action shall be considered to be equivalent to providing the same information or documents to the foreign drug establishment.

(3) The foreign drug establishment shall report changes in the United States agent's name, address, or phone number to FDA within 5 days of the change.

PART 607—ESTABLISHMENT REGISTRATION AND PRODUCT LISTING FOR MANUFACTURERS OF HUMAN BLOOD AND BLOOD PRODUCTS

10. The authority citation for 21 CFR part 607 is revised to read as follows:

Authority: 21 U.S.C. 321, 331, 351, 352, 355, 360, 371, 374, 381, 393; 42 U.S.C. 262, 264, 271.

11. Section 607.3 is amended by revising paragraph (e) and by adding paragraph (j) to read as follows:

§ 607.3 Definitions.

* * * * *

(e) *Commercial distribution* means any distribution of a blood product except pursuant to the investigational use provisions of part 312 of this chapter, but does not include internal or interplant transfer of a bulk product substance between registered establishments within the same parent, subsidiary, and/or affiliate company. For foreign establishments, the term ''commercial distribution'' shall have the same meaning except that the term shall not include distribution of any blood or blood product that is neither imported nor offered for import into the United States.

* * * * *

(j) *United States agent* means a person residing or maintaining a place of business in the United States whom a foreign establishment designates as its agent.

12. Section 607.7 is amended by revising paragraphs (b) and (c) to read as follows:

§ 607.7 Establishment registration and product listing of blood banks and other firms manufacturing human blood and blood products.

* * * * *

(b) Forms for registration of an establishment are obtainable on request from the Center for Biologics Evaluation and Research (HFM–375), Food and Drug Administration, 1401 Rockville Pike, suite 200N, Rockville, MD 20852–1448, or at any of the Food and Drug Administration district offices.

(c) The completed form should be mailed to the Center for Biologics Evaluation and Research (HFM–375), Food and Drug Administration, 1401 Rockville Pike, suite 200N, Rockville, MD 20852–1448.

13. Section 607.20 is amended by revising paragraph (a) to read as follows:

§ 607.20 Who must register and submit a blood product list.

(a) Owners or operators of all establishments, not exempt under section 510(g) of the act or subpart D of this part 607, that engage in the manufacture of blood products shall register and submit a list of every blood product in commercial distribution (except that listing information may be submitted by the parent, subsidiary, and/or affiliate company for all establishments when operations are conducted at more than one establishment and there exists joint

ownership and control among all the establishments). Blood products manufactured, prepared, propagated, compounded, or processed in any State as defined in section 201(a)(1) of the act must be listed whether or not the output of such blood product establishment or any particular blood product so listed enters interstate commerce.

* * * * *

14. Section 607.22 is revised to read as follows:

§ 607.22 How and where to register establishments and list blood products.

(a) The first registration of an establishment shall be on Form FD–2830 (Blood Establishment Registration and Product Listing) obtainable on request from the Center for Biologics Evaluation and Research (HFM–375), Food and Drug Administration, 1401 Rockville Pike, suite 200N, Rockville, MD 20852–1448, or from Food and Drug Administration district offices. Subsequent annual registration shall also be accomplished on Form FD–2830 which will be furnished by the Food and Drug Administration before November 15 of each year to establishments whose product registration for that year was validated pursuant to § 607.35. The completed form shall be mailed to the above address before December 31 of that year.

(b) The first list of blood products and subsequent June and December updatings shall be on Form FD–2830, obtainable upon request as described in paragraph (a) of this section.

§ 607.25 [Amended]

15. Section 607.25 *Information required for establishment registration and blood product listing* is amended in the second sentence of paragraph (a) by removing the word ''ZIP''.

16. Section 607.26 is amended by revising the first sentence to read as follows:

§ 607.26 Amendments to establishment registration.

Changes in individual ownership, corporate or partnership structure, location, or blood-product handling activity shall be submitted on Form FD–2830 (Blood Establishment Registration and Product Listing) as an amendment to registration within 5 days of such changes. * * *

17. Section 607.31 is amended by revising paragraph (a) and by removing and reserving paragraph (b) to read as follows:

§ 607.31 Additional blood product listing information.

(a) In addition to the information routinely required by §§ 607.25 and 607.30, the Director of the Center for Biologics Evaluation and Research may require submission of the following information by letter or by **Federal Register** notice:

(1) For a particular blood product so listed, upon request made by the Director of the Center for Biologics Evaluation and Research for good cause, a copy of all advertisements.

(2) For a particular blood product so listed, upon a finding by the Director of the Center for Biologics Evaluation and Research that it is necessary to carry out the purposes of the act, a quantitative listing of all ingredients.

(3) For each registrant, upon a finding by the Director of the Center for Biologics Evaluation and Research that it is necessary to carry out the purposes of the act, a list of each listed blood product containing a particular ingredient.

(b) [Reserved]

18. Section 607.35 is amended by revising paragraph (a) to read as follows:

§ 607.35 Notification of registrant; blood product establishment registration number and NDC Labeler Code

(a) The Director of the Center for Biologics Evaluation and Research will provide to the registrant a validated copy of Form FD–2830 (Blood Establishment Registration and Product Listing) as evidence of registration. This validated copy will be sent to the location shown for the registering establishment, and a copy will be sent to the reporting official if at another address. A permanent registration number will be assigned to each blood product establishment registered in accordance with the regulations of this subpart.

* * * * *

19. Section 607.37 is amended by revising the introductory text of paragraph (a) and by revising paragraph (b) to read as follows:

§ 607.37 Inspection of establishment registrations and blood product listings.

(a) A copy of the Form FD–2830 (Blood Establishment Registration and Product Listing) filed by the registrant will be available for inspection pursuant to section 510(f) of the act, at the Office of Communication, Training and Manufacturers' Assistance (HFM–40), Center for Biologics Evaluation and Research, Food and Drug Administration, 1401 Rockville Pike, suite 200N, Rockville, MD 20852–1448. In addition, for domestic firms, the same information will be available for inspection at each of the Food and Drug Administration district offices for firms within the geographical area of such district office. Upon request and receipt of a self-addressed stamped envelope, verification of registration number, or location of registered establishment will be provided. The following information submitted pursuant to the blood product listing requirements is illustrative of the type of information that will be available for public disclosure when it is compiled:

* * * * *

(b) Requests for information regarding blood establishment registrations and blood product listings should be directed to the Office of Communication, Training and Manufacturers' Assistance (HFM–40), Center for Biologics Evaluation and Research, Food and Drug Administration, 1401 Rockville Pike, suite 200N, Rockville, MD 20852–1448.

20. Section 607.40 is revised to read as follows:

§ 607.40 Establishment registration and blood product listing requirements for foreign blood product establishments.

(a) Every foreign establishment shall comply with the establishment registration and blood product listing requirements contained in subpart B of this part, unless exempt under subpart D of this part.

(b) No blood product may be imported or offered for import into the United States except a blood product imported or offered for import pursuant to the investigational use provisions of part 312 of this chapter, unless it is the subject of a blood product listing as required under subpart B of this part and is manufactured, prepared, propagated, compounded, or processed at a registered foreign establishment. The establishment registration and blood product listing information shall be in the English language.

(c) Each foreign establishment required to register under paragraph (a) of this section shall, as part of the establishment registration and blood product listing, submit the name and address of the establishment and the name of the individual responsible for submitting establishment registration and blood product listing information. Any changes in this information shall be reported to the Food and Drug Administration at the intervals specified for updating establishment registration information in § 607.26 and blood product listing information in § 607.30(a).

(d) Each foreign establishment required to register under paragraph (a) of this section shall submit the name, address, and phone number of its United States agent as part of its initial and updated registration information in

accordance with subpart B of this part. Each foreign establishment shall designate only one United States agent.

(1) The United States agent shall reside or maintain a place of business in the United States.

(2) Upon request from FDA, the United States agent shall assist FDA in communications with the foreign establishment, respond to questions concerning the foreign establishment's products that are imported or offered for import into the United States, and assist FDA in scheduling inspections of the foreign establishment. If the agency is unable to contact the foreign establishment directly or expeditiously, FDA may provide information or documents to the United States agent, and such an action shall be considered to be equivalent to providing the same information or documents to the foreign establishment.

(3) The foreign establishment shall report changes in the United States agent's name, address, or phone number to FDA within 5 days of the change.

21. Section 607.65 is amended by revising the introductory text to read as follows:

§ 607.65 Exemptions for blood product establishments.

The following classes of persons are exempt from registration and blood product listing in accordance with this part 607 under the provisions of section 510(g)(1), (g)(2), and (g)(3) of the act, or because the Commissioner has found, under section 510(g)(4), that such registration is not necessary for the protection of the public health. The exemptions in paragraphs (a), (b), (f), and (g) of this section are limited to those classes of persons located in any State as defined in section 201(a)(1) of the act.

* * * * *

PART 807—ESTABLISHMENT REGISTRATION AND DEVICE LISTING FOR MANUFACTURERS AND DISTRIBUTORS OF DEVICES

22. The authority citation for 21 CFR part 807 is revised to read as follows:

Authority: 21 U.S.C. 321, 331, 351, 352, 360, 360c, 360e, 360i, 360j, 371, 374, 381, 393; 42 U.S.C. 264, 271.

23. Section 807.3 is amended by revising paragraphs (b) and (r) to read as follows:

§ 807.3 Definitions.

* * * * *

(b) *Commercial distribution* means any distribution of a device intended for human use which is held or offered for sale but does not include the following:

(1) Internal or interplant transfer of a device between establishments within the same parent, subsidiary, and/or affiliate company;

(2) Any distribution of a device intended for human use which has in effect an approved exemption for investigational use pursuant to section 520(g) of the act and part 812 of this chapter;

(3) Any distribution of a device, before the effective date of part 812 of this chapter, that was not introduced or delivered for introduction into interstate commerce for commercial distribution before May 28, 1976, and that is classified into class III under section 513(f) of the act: *Provided,* That the device is intended solely for investigational use, and under section 501(f)(2)(A) of the act the device is not required to have an approved premarket approval application as provided in section 515 of the act; or

(4) For foreign establishments, the distribution of any device that is neither imported nor offered for import into the United States.

* * * * *

(r) *United States agent* means a person residing or maintaining a place of business in the United States whom a foreign establishment designates as its agent.

* * * * *

24. The heading to subpart B ''Procedures for Domestic Device Establishments'' is revised to read as follows:

Subpart B—Procedures for Device Establishments

25. Section 807.20 is amended by revising paragraph (a) to read as follows:

§ 807.20 Who must register and submit a device list.

(a) An owner or operator of an establishment not exempt under section 510(g) of the act or subpart D of this part who is engaged in the manufacture, preparation, propagation, compounding, assembly, or processing of a device intended for human use shall register and submit listing information for those devices in commercial distribution, except that listing information may be submitted by the parent, subsidiary, or affiliate company for all the domestic or foreign establishments under the control of one of these organizations when operations are conducted at more than one establishment and there exists joint ownership and control among all the establishments. The term ''device'' includes all in vitro diagnostic products and in vitro diagnostic biological products not subject to licensing under section 351 of the Public Health Service Act. An owner or operator of an establishment located in any State as defined in section 201(a)(1) of the act shall register its name, places of business, and all establishments and list the devices whether or not the output of the establishments or any particular device so listed enters interstate commerce. The registration and listing requirements shall pertain to any person who:

(1) Initiates or develops specifications for a device that is to be manufactured by a second party for commercial distribution by the person initiating specifications;

(2) Manufactures for commercial distribution a device either for itself or for another person. However, a person who only manufactures devices according to another person's specifications, for commercial distribution by the person initiating specifications, is not required to list those devices;

(3) Repackages or relabels a device;

(4) Acts as an initial importer; or

(5) Manufactures components or accessories which are ready to be used for any intended health-related purpose and are packaged or labeled for commercial distribution for such health-related purpose, e.g., blood filters, hemodialysis tubing, or devices which of necessity must be further processed by a licensed practitioner or other qualified person to meet the needs of a particular patient, e.g., a manufacturer of ophthalmic lens blanks.

* * * * *

§ 807.25 [Amended]

26. Section 807.25 *Information required or requested for establishment registration and device listing* is amended in the last sentence of paragraph (a) by removing the word ''ZIP''.

27. Section 807.40 is revised to read as follows:

§ 807.40 Establishment registration and device listing for foreign establishments importing or offering for import devices into the United States.

(a) Any establishment within any foreign country engaged in the manufacture, preparation, propagation, compounding, or processing of a device that is imported or offered for import into the United States shall register and list such devices in conformance with the requirements in subpart B of this part. The official correspondent for the foreign establishment shall facilitate communication between the foreign establishment's management and

representatives of the Food and Drug Administration.

(b) Each foreign establishment required to register under paragraph (a) of this section shall submit the name, address, and phone number of its United States agent as part of its initial and updated registration information in accordance with subpart B of this part. Each foreign establishment shall designate only one United States agent and may designate the United States agent to act as its official correspondent.

(1) The United States agent shall reside or maintain a place of business in the United States.

(2) Upon request from FDA, the United States agent shall assist FDA in communications with the foreign establishment, respond to questions concerning the foreign establishment's products that are imported or offered for import into the United States, and assist FDA in scheduling inspections of the foreign establishment. If the agency is unable to contact the foreign establishment directly or expeditiously, FDA may provide information or documents to the United States agent, and such an action shall be considered to be equivalent to providing the same information or documents to the foreign establishment.

(3) The foreign establishment shall report changes in the United States agent's name, address, or phone number to FDA within 5 days of the change.

(c) No device may be imported or offered for import into the United States except a device imported or offered for import pursuant to the investigational use provisions of part 812 of this chapter, unless it is the subject of a device listing as required under subpart B of this part and is manufactured, prepared, propagated, compounded, or processed at a registered foreign establishment. The establishment registration and device listing information shall be in the English language.

Dated: January 26, 1999.

William K. Hubbard,

Acting Deputy Commissioner for Policy.

[FR Doc. 99–12040 Filed 5–13–99; 8:45 am]

BILLING CODE 4160–01–F

DEPARTMENT OF HEALTH AND HUMAN SERVICES

Food and Drug Administration

21 CFR Part 640

[Docket No. 98N–0608]

Revision of Requirements Applicable to Albumin (Human), Plasma Protein Fraction (Human), and Immune Globulin (Human); Companion Document to Direct Final Rule

AGENCY: Food and Drug Administration, HHS.

ACTION: Proposed rule.

SUMMARY: The Food and Drug Administration (FDA) is proposing to amend the biologics regulations by removing, revising, or updating specific regulations applicable to blood derivative products to be more consistent with current practices and to remove unnecessary or outdated requirements. FDA is taking this action as part of the agency's ''Blood Initiative'' in which FDA is reviewing and revising, when appropriate, its regulations, policies, guidance, and procedures related to blood products, including blood derivatives. This proposed rule is a companion document to the direct final rule published elsewhere in this issue of the **Federal Register**. FDA is taking this action because the proposed changes are noncontroversial and FDA anticipates that it will receive no significant adverse comment.

DATES: Submit written comments on or before July 28, 1999. If FDA receives any significant adverse comment regarding this rule, FDA will publish a document withdrawing the direct final rule within 30 days after the comment period ends. FDA then and will proceed to respond to the comments under this proposed rule using the usual notice and comment procedures. Any parties interested in commenting on this document should do so at this time.

If FDA receives no significant adverse comments within the specified comment period, the agency intends to publish a document confirming the effective date of the final rule in the **Federal Register** within 30 days after the comment period on the direct final rule ends. The direct final rule will be effective September 27, 1999.

ADDRESSES: Submit written comments on the proposed rule to the Dockets Management Branch (HFA–305), Food and Drug Administration, 5630 Fishers Lane, rm. 1061, Rockville, MD 20852.

FOR FURTHER INFORMATION CONTACT: Sharon A. Carayiannis, Center for Biologics Evaluation and Research (HFM–17), Food and Drug Administration, 1401 Rockville Pike, Rockville, MD 20852–1448, 301–827–6210.

SUPPLEMENTARY INFORMATION:

I. Background

This proposed rule is a companion to the direct final rule published in the final rules section of this issue of the **Federal Register**. This companion proposed rule will provide the procedural framework to finalize the rule in the event that the direct final rule receives any adverse comment and is withdrawn. The comment period for this companion proposed rule runs concurrently with the comment period for the direct final rule. Any comments received under this companion rule will also be considered as comments regarding the direct final rule. FDA is publishing the direct final rule because the rule contains noncontroversial changes, and FDA anticipates that it will receive no significant adverse comment.

A significant comment is defined as a comment that explains why the rule would be inappropriate, including challenges to the rule's underlying premise or approach, or would be ineffective or unacceptable without a change. In determining whether a significant adverse comment is sufficient to terminate a direct final rulemaking, FDA will consider whether the comment raises an issue serious enough to warrant a substantive response in a notice-and-comment process. Comments that are frivolous, insubstantial, or outside the scope of the rule will not be considered significant or adverse under this procedure. A comment recommending a rule change in addition to the rule would not be considered a significant adverse comment, unless the comment states why the rule would be ineffective without additional change. In addition, if a significant adverse comment applies to an amendment, paragraph, or section of this rule and that provision can be severed from the remainder of the rule, FDA may adopt as final those provisions of the rule that are not subjects of significant adverse comments.

If no significant adverse comment is received in response to the direct final rule, no further action will be taken related to this proposed rule. Instead, FDA will publish a confirmation document within 30 days after the comment period ends confirming that the direct final rule will go into effect on September 27, 1999. Additional information about FDA's direct rulemaking procedures is set forth in a guidance published in the **Federal**

Register of November 21, 1997 (62 FR 62466).

For a variety of reasons, FDA has decided to comprehensively review and, as necessary, revise its regulations, policies, guidance and procedures related to the licensing and regulation of blood products. FDA is issuing this companion proposed rule and the direct final rule, published elsewhere in this issue of the **Federal Register**, as part of the agency's ''Blood Initiative'' in which FDA is reviewing and revising, when appropriate, its regulations, policies, guidance, and procedures related to blood products, including plasma derivatives. The ''Blood Initiative'' is discussed in detail in the preamble to the direct final rule.

FDA emphasizes that for many of the changes discussed below, additional issues related to the regulations now being amended continue to be under consideration by the agency. Further, more substantive changes may be proposed at a later date. Accordingly, any comment recommending an additional change to these regulations will not be considered to be an ''adverse comment'' unless the comment demonstrates that the change being made in the direct final rule represents a major departure from current regulations or accepted industry standards, or cannot be implemented without additional amendments to the regulations.

II. Legal Authority

FDA is proposing to promulgate this new rule under the biologics products and communicable disease provisions of the Public Health Service Act (PHS Act) (42 U.S.C. 262–264) and the drug, device, and general administrative provisions of the Federal Food, Drug, and Cosmetic Act (the act) (21 U.S.C. 321, 331, 351–353, 355, 360, 360j, 371, and 374). Under these provisions of the PHS Act and the act, FDA has the authority to promulgate and enforce regulations designed to ensure that biological products are safe, pure, potent, and properly labeled and to prevent the introduction, transmission, and spread of communicable disease.

III. Highlights of the Proposed Rule

FDA is proposing to amend the biologics regulations by removing, revising, or updating specific regulations applicable to blood derivative products to be more consistent with current practices and to remove unnecessary or outdated requirements. In addition, minor editorial changes, such as correction of punctuation, would be made. As previously discussed, FDA is also issuing these amendments directly as a final rule because the agency believes they are noncontroversial and that there is little likelihood that there will be comments opposing the rule. FDA is identifying each of the changes included in the proposed rule as follows.

A. Identification of Plasma as the Source Material for Derivative Products

Sections 640.80(a), 640.90(a), and 640.100(a) (21 CFR 640.80(a), 640.90(a), and 640.100(a)) state the proper name and definition for Albumin (Human), Plasma Protein Fraction (Human) and Immune Globulin (Human), respectively. With the ubiquitous use of modern anticoagulants, these products are prepared solely from human plasma. Under the proposal, §§ 640.80(a), 640.90(a), and 640.100(a) would be changed from ''a sterile solution * * * human blood'' to ''a sterile solution * * * derived from human plasma.''

Sections 640.80(b), 640.90(b), and 640.100(b) discuss source material of Albumin (Human), Plasma Protein Fraction (Human), and Immune Globulin (Human), respectively. With modern practice, these products are no longer prepared from Whole Blood, sera, or human placentas. FDA is proposing to change §§ 640.80(b), 640.90(b), and 640.100(b) to clarify and update the requirements for source material. Sections 640.80(b), 640.90(b), and 640.100(b) would be changed to read ''The source material of * * * shall be plasma recovered from Whole Blood prepared as prescribed in §§ 640.1 through 640.5, or Source Plasma prepared as prescribed in §§ 640.60 through 640.76.''

B. Clarification for Microbial Contamination During Processing

Sections 640.81(c) and 640.91(c) (21 CFR 640.81(c) and 640.91(c)) discuss microbial contamination of source material and would be amended to clarify that ''All processing steps shall be conducted in a manner to minimize the risk of contamination from microorganisms, pyrogens, or other impurities.''

C. Clarification of Process for Heat Treatment

Sections 640.81(e) and 640.91(e) discuss heat treatment and would be amended to clarify that the heating process shall be continuous for the time and at the temperature currently specified in the regulations. In addition, FDA is proposing to correct §§ 640.81(e) and 640.91(e) by removing a degree sign to read ''60±0.5 C''.

D. Clarification for Stabilizer Used in Albumin (Human) and Plasma Protein Fraction (Human)

Under the proposal, §§ 640.81(f) and 640.91(f), *Stabilizer*, would be amended by clarifying the range for acceptable amounts of stabilizer(s) that shall be present in Albumin (Human) and Plasma Protein Fraction (Human), respectively. Consistent with the amount of stabilizer(s) currently used in these products, the regulations are amended to require either 0.08±0.016 millimole sodium caprylate, or 0.08±0.016 millimole sodium acetyltryptophanate and 0.08±0.016 millimole sodium caprylate per gram (/g) of protein. FDA is proposing the word ''present'' be substituted for ''added'' in §§ 640.81(f) and 640.91(f) to clarify that the regulation pertains to the amount of stabilizer in the final product. In addition, §§ 640.81(f) and 640.91(f) would be amended to simplify calculations of stabilizer(s) content in Albumin (Human) and Plasma Protein Fraction (Human). Under the proposal, manufacturers may employ the labeled value for the protein concentration. For example, if the measured protein concentration of a lot of 5 percent Albumin (Human) is 5.15 percent, the calculations of stabilizer(s) content may use the labeled value of 5 percent. Thus, under this proposal, if the measured concentration of sodium caprylate is 0.35 millimole/deciliter (dL) and the measured protein concentration is 5.15 percent (i.e., 5.15 g/dL), the sodium caprylate concentration may be calculated as 0.35 divided by 5, or 0.07 millimole/g of protein.

E. Revision of Terminology

Under the proposal, §§ 640.82(a) and 640.82(d), *Protein content* and *Sodium content*, respectively, would be amended by replacing ''content'' with ''concentration'' to be more precise.

Sections 640.82(c), 640.92(c), and 640.101(b) would be amended by changing the term from ''hydrogen ion concentration'' to ''pH'' to reflect the more commonly used terminology.

Section 640.82(e), *Heme content*, is replaced by *Potassium concentration*, which describes the acceptable potassium concentration of the final product. Heme concentration is well controlled by the procedures currently used to prepare plasma, and all recent lots of Albumin (Human) have heme concentrations well below the maximum specified in the current regulation. FDA is proposing to update the regulations by deleting the requirement for the determination of heme content and replacing it with a

requirement that ''the potassium concentration of the final product shall not exceed 2 milliequivalents per liter.'' All licensed manufacturers are currently manufacturing Albumin (Human) with a potassium concentration that does not exceed 2 milliequivalents per liter. This proposed revision is also consistent with the current requirements in § 640.92(e) for the closely related product, Plasma Protein Fraction.

FDA is proposing that §§ 640.84(a)(1), 640.84(a)(4), 640.92(a), 640.92(d), 640.92(e), and 640.94(a), be amended by replacing ''content'' with 1''concentration'' to be more precise.Under the proposal, § 640.84(b) would be removed to be consistent with changes made to § 640.80(a) and (b). Sections 640.84(a)(1) through (a)(4) would be redesignated as § 640.84(a) through (d).

F. Correction of Spelling

Under the proposal, § 640.91(b)(2) and (c) would be amended by correcting the spelling of ''coefficient'' and ''contamination,'' respectively.

G. Revision of Range for Protein Concentration

Under the proposal, § 640.92(a), *Protein concentration*, would be corrected by changing ''5.0±0.3'' to ''5.0±0.30'' to reflect the precision of the value.

H. Revision of general requirements and sterilization and heating for Immune Globulin (Human).

Under the proposal, §§ 640.101(e)(3) and (e)(4) would be removed to be consistent with current practice. The use of the current attenuated strain of measles used in the manufacture of measles vaccines licensed in the United States results in products that do not require the concomitant administration of measles antibodies. Moreover, the labeling for measles vaccines contains appropriate precautions regarding the effect of Immune Globulin (Human). With the availability of a highly effective vaccine, passive prophylaxis for poliomyelitis with Immune Globulin (Human), which had only minimal effectiveness, was discontinued many years ago.

FDA is proposing to remove § 640.101(f), *Samples and protocols*, to be consistent with current policy. Current policy permits manufacturers of biological products, including plasma derivatives, to request exemption from lot release by the Center for Biologics Evaluation and Research (CBER). After review of the data submitted in support of such a request, the Director, CBER, may grant the request, thus decreasing the regulatory burden on the manufacturer and permitting distribution of the product as soon as the manufacturer has completed all necessary quality control procedures on a particular lot.

FDA is proposing to amend § 640.102(e), *Sterilization and heating*, by removing ''* * * 30 to * * *''. The effect of the regulation would be unchanged by this proposed revision.

I. Revision of Determination of Protein Composition of Final Product for Immune Globulin (Human)

Section 640.103(b) describes the protein composition of the Immune Globulin (Human) final product in terms of absolute electrophoretic mobility. This value was computed from measurements made by moving boundary electrophoresis. For at least 25 years, the instrumentation necessary for performing moving boundary electrophoresis has not been commercially available. Accordingly, as such equipment was becoming less available, all licensed manufacturers of Immune Globulin (Human) calibrated more modern methods against moving boundary electrophoresis and amended their product license applications for Immune Globulin (Human) to provide for the use of the more modern methods. In addition, using more modern methods of manufacturing and measurement, manufacturers are now routinely making a more highly purified product. Accordingly, FDA is proposing to amend § 640.103(b) to read ''At least 96 percent of the total protein shall be immunoglobulin G (IgG), as determined by a method that has been approved for each manufacturer by the Director, Center for Biologics Evaluation and Research, Food and Drug Administration.''

J. Revision of Minimum Levels for Measles Neutralizing Antibody and Poliomyelitis Neutralizing Antibody

FDA is proposing to revise § 640.104(b)(2), consistent with current accepted practice, by eliminating a specified numerical value for the measles neutralizing antibody level. This change would allow more flexibility for industry and FDA, in that the regulations will no longer become outdated each time a new reference standard is used. The regulation would be changed to read ''A measles neutralizing antibody level that, when compared with that of a reference material designated by the Center for Biologics Evaluation and Research (CBER), Food and Drug Administration, as indicated in paragraph (c) of this section, demonstrates adequate potency. The Director, CBER, shall notify manufacturers when a new reference material will be used and will advise manufacturers of an appropriate antibody level taking into account a comparison of the new reference material to the previous reference material.''

FDA is proposing to revise § 640.104(b)(3), consistent with current accepted practice, by eliminating a specified numerical value for the poliomyelitis neutralizing antibody level. This change allows more flexibility for industry and FDA, in that the regulations will no longer become outdated each time a new reference standard is used. The regulation is changed to read ''A poliomyelitis Type 1, Type 2, or Type 3 neutralizing antibody level that, when compared with that of a reference material designated by the Center for Biologics Evaluation and Research, Food and Drug Administration, as indicated in paragraph (c) of this section, demonstrates adequate potency. The Director, CBER, shall notify manufacturers when a new reference material will be used and will advise manufacturers of an appropriate antibody level taking into account a comparison of the new reference material to the previous reference material.''

K. Revision of Nomenclature for Reference Immune Globulin

FDA is proposing to amend § 640.104(c)(1) and (c)(2) by removing the word ''Serum'' to reflect the more precise nomenclature of ''Reference Immune Globulin * * *''

IV. Analysis of Impacts

A. Review Under Executive Order 12866 and the Regulatory Flexibility Act and the Unfunded Mandates Act of 1995.

FDA has examined the impact of the proposed rule under Executive Order 12866 and the Regulatory Flexibility Act (5 U. S. C. 601–612), and the Unfunded Mandates Reform Act of 1995 (Pub. L. 104–4). Executive Order 12866 directs agencies to assess all costs and benefits of available regulatory alternatives and, when regulation is necessary, to select regulatory approaches that maximize net benefits (including potential economic, environmental, public health and safety, and other advantages; distributive impact; and equity). The agency believes that this proposed rule is consistent with the regulatory philosophy and principles identified in the Executive Order.

The agency believes that this proposed rule is consistent with the

regulatory philosophy and principles identified in the Executive Order. This proposed rule is not a significant regulatory action as defined by the Executive Order and therefore is not subject to review under the Executive Order.

The Regulatory Flexibility Act requires agencies to analyze regulatory options that would minimize any significant impact of a rule on small business entities. Because the proposed rule amendments have no compliance costs and do not result in any new requirements, the agency certifies that the proposed rule will not have a significant negative economic impact on a substantial number of small entities. Therefore, under the Regulatory Flexibility Act, no further analysis is required. This proposed rule also does not trigger the requirement for a written statement under section 202(a) of the Unfunded Mandates Reform Act of 1995 because it does not impose a mandate that results in an expenditure of $100 million or more by State, local, and tribal governments in the aggregate, or by the private sector in any 1 year.

B. Environmental Impact

The agency has determined under 21 CFR 25.31(j) that this action is of a type that does not individually or cumulatively have a significant effect on the human environment. Therefore, neither an environmental assessment nor an environmental impact statement is required.

V. The Paperwork Reduction Act of 1995

FDA tentatively concludes that this proposed rule contains no collections of information. Therefore, clearance by the Office of Management and Budget under the Paperwork Reduction Act of 1995 is not required.

VI. Request for Comments

Interested persons may, on or before July 28, 1999, submit to the Docket Management Branch (address above) written comments regarding this proposal. Two copies of any comments are to be submitted, except that individuals may submit one copy. Comments are to be identified with the docket number found in brackets in the heading of this document. Received comments may be seen in the office above between 9 a.m. and 4 p.m., Monday through Friday.

List of Subjects in 21 CFR Part 640

Blood, Labeling, Reporting and recordkeeping requirements.

Therefore, under the Federal Food, Drug, and Cosmetic Act, the Public Health Service Act, and under authority delegated to the Commissioner of Food and Drugs, it is proposed that 21 CFR part 640 be amended as follows:

PART 640—ADDITIONAL STANDARDS FOR HUMAN BLOOD AND BLOOD PRODUCTS

1. The authority citation for 21 CFR part 640 continues to read as follows:

Authority: 21 U.S.C. 321, 351, 352, 353, 355, 360, 371; 42 U.S.C. 216, 262, 263, 263a, 264.

2. Section 640.80 is amended by revising the last sentence in paragraph (a) and by revising paragraph (b) to read as follows:

§ 640.80 Albumin (Human).

(a) * * * The product is defined as a sterile solution of the albumin derived from human plasma.

(b) *Source material.* The source material of Albumin (Human) shall be plasma recovered from Whole Blood prepared as prescribed in §§ 640.1 through 640.5, or Source Plasma prepared as prescribed in §§ 640.60 through 640.76.

* * * * *

3. Section 640.81 is amended by revising the first sentence of paragraph (c) and the last sentence in paragraph (e), and by revising paragraph (f) to read as follows:

§ 640.81 Processing.

* * * * *

(c) *Microbial contamination.* All processing steps shall be conducted in a manner to minimize the risk of contamination from microorganisms, pyrogens, or other impurities. * * *

* * * * *

(e) *Heat treatment.* * * * Heat treatment shall be conducted so that the solution is heated continuously for not less than 10 or more than 11 hours at an attained temperature of 60±0.5 °C.

(f) *Stabilizer.* Either 0.08±0.016 millimole sodium caprylate, or 0.08±0.016 millimole sodium acetyltryptophanate and 0.08±0.016 millimole sodium caprylate per gram of protein shall be present as a stabilizer(s). Calculations of the stabilizer concentration may employ the labeled value for the protein concentration of the product as referred to in § 640.84(d).

* * * * *

4. Section 640.82 is amended by revising the headings in paragraphs (a) and (c), and by revising paragraphs (d) and (e) to read as follows:

* * * * *

§ 640.82 Tests on final product.

* * * * *

(a) *Protein concentration.* * * *

* * * * *

(c) *pH.* * * *

(d) *Sodium concentration.* The sodium concentration of the final product shall be 130 to 160 milliequivalents per liter.

(e) *Potassium concentration.* The potassium concentration of the final product shall not exceed 2 milliequivalents per liter.

* * * * *

5. Section 640.84 is amended by revising the introductory paragraph, by removing paragraph (a) introductory text and paragraph (b), by redesignating paragraphs (a)(1) through (a)(4) as paragraphs (a) through (d), respectively, and by revising newly redesignated paragraphs (a) and (d) to read as follows:

§ 640.84 Labeling.

In addition to the labeling requirements of §§ 610.60, 610.61, and 610.62 of this chapter, the container and package labels shall contain the following information:

(a) The osmotic equivalent in terms of plasma, and the sodium concentration in terms of a value or a range in milliequivalents per liter;

* * * * *

(d) The protein concentration, expressed as a 4 percent, 5 percent, 20 percent, or 25 percent solution.

6. Section 640.90 is amended by revising the last sentence in paragraph (a) and by revising paragraph (b) to read as follows:

§ 640.90 Plasma Protein Fraction (Human).

(a) * * * The product is defined as a sterile solution of protein composed of albumin and globulin, derived from human plasma.

(b) *Source material.* The source material of Plasma Protein Fraction (Human) shall be plasma recovered from Whole Blood prepared as prescribed in §§ 640.1 through 640.5, or Source Plasma prepared as prescribed in §§ 640.60 through 640.76.

* * * * *

7. Section 640.91 is amended by revising paragraphs (b)(2) and (f), and by revising the first sentence in paragraph (c) and the last sentence in paragraph (e) to read as follows:

§ 640.91 Processing.

* * * * *

(b) * * *

(2) Contains less than 5 percent protein with a sedimentation coefficient greater than 7.0 S.

(c) *Microbial contamination*. All processing steps shall be conducted in a manner to minimize the risk of contamination from microorganisms, pyrogens, or other impurities. * * *

* * * * *

(e) * * * Heat treatment shall be conducted so that the solution is heated continuously for not less than 10 or more than 11 hours at an attained temperature of 60±0.5 °C.

(f) *Stabilizer*. Either 0.08±0.016 millimole sodium caprylate, or 0.08±0.016 millimole sodium acetyltryptophanate and 0.08±0.016 millimole sodium caprylate per gram of protein shall be present as a stabilizer(s). Calculations of the stabilizer concentration may employ the labeled value 5 percent for the protein concentration of the product.

* * * * *

8. Section 640.92 is amended by revising the headings of paragraphs (a) and (c), and by revising paragraphs (d) and (e) to read as follows:

§ 640.92 Tests on final product.

* * * * *

(a) *Protein concentration*. * * *

* * * * *

(c) *pH*. * * *

(d) *Sodium concentration*. The sodium concentration of the final product shall be 130 to 160 milliequivalents per liter.

(e) *Potassium concentration*. The potassium concentration of the final product shall not exceed 2 milliequivalents per liter.

* * * * *

9. Section 640.94 is amended by revising paragraph (a) to read as follows:

§ 640.94 Labeling.

* * * * *

(a) The osmotic equivalent in terms of plasma, and the sodium concentration in terms of a value or a range in milliequivalents per liter.

* * * * *

10. Section 640.100 is amended by revising the last sentence in paragraph (a), and by revising paragraphs (b) and (c) to read as follows:

§ 640.100 Immune Globulin (Human).

(a) * * * The product is defined as a sterile solution containing antibodies derived from human plasma.

(b) *Source material*. The source material of Immune Globulin (Human) shall be plasma recovered from Whole Blood prepared as prescribed in §§ 640.1 through 640.5, or Source Plasma prepared as prescribed in §§ 640.60 through 640.76.

(c) *Additives in source material*. The source material shall contain no additives other than citrate or acid citrate dextrose anticoagulant solution, unless it is shown that the processing method yields a product free of the additive to such an extent that the safety, purity, and potency of the product will not be affected adversely.

§ 640.101 [Amended]

11. Section 640.101 *General requirements* is amended by removing the heading of paragraph (b) ''*Hydrogen ion concentration*'' and by adding in its place ''*pH*'' and by removing paragraphs (e)(3), (e)(4), and (f).

12. Section 640.102 is amended by revising the last sentence of paragraph (e) to read as follows:

640.102 Manufacture of Immune Globulin (Human).

* * * * *

(e) * * * At no time during processing shall the product be exposed to temperatures above 45 °C and after sterilization the product shall not be exposed to temperatures above 32 °C for more than 72 hours.

13. Section 640.103 is amended by revising paragraph (b) to read as follows:

§ 640.103 The final product.

* * * * *

(b) *Protein composition*. At least 96 percent of the total protein shall be immunoglobulin G (IgG), as determined by a method that has been approved for each manufacturer by the Director, Center for Biologics Evaluation and Research, Food and Drug Administration.

14. Section 640.104 is amended by revising paragraphs (b)(2), (b)(3), (c)(1), and (c)(2) to read as follows:

§ 640.104 Potency.

* * * * *

(b) * * *

(2) A measles neutralizing antibody level that, when compared with that of a reference material designated by the Center for Biologics Evaluation and Research (CBER), Food and Drug Administration, as indicated in paragraph (c) of this section, demonstrates adequate potency. The Director, CBER, shall notify manufacturers when a new reference material will be used and will advise manufacturers of an appropriate antibody level taking into account a comparison of the new reference material to the previous reference material.

(3) A poliomyelitis Type 1, Type 2, or Type 3 neutralizing antibody level that, when compared with that of a reference material designated by the Center for Biologics Evaluation and Research, Food and Drug Administration, as indicated in paragraph (c) of this section, demonstrates adequate potency. The Director, CBER, shall notify manufacturers when a new reference material will be used and will advise manufacturers of an appropriate antibody level taking into account a comparison of the new reference material to the previous reference material.

(c) * * *

(1) Reference Immune Globulin for correlation of measles antibody titers.

(2) Reference Immune Globulin for correlation of poliomyelitis antibody titers, Types 1, 2, and 3.

Dated: April 20, 1999.

Jane E. Henney,

Commissioner of Food and Drugs.

Donna E. Shalala,

Secretary of Health and Human Services.

[FR Doc. 99–11898 Filed 5-13-99; 8:45 am]

BILLING CODE 4160–01–F

DEPARTMENT OF THE TREASURY

Internal Revenue Service

26 CFR Part 1

[REG–106905–98]

RIN 1545–AW09

Allocation of Loss With Respect to Stock and Other Personal Property; Hearing Cancellation

AGENCY: Internal Revenue Service (IRS), Treasury.

ACTION: Cancellation of notice of public hearing on proposed rulemaking.

SUMMARY: This document provides notice of cancellation of a public hearing on proposed regulations relating to the allocation of loss recognized on the disposition of stock and other personal property.

DATES: The public hearing originally scheduled for Wednesday, May 26, 1999, at 10 a.m., is cancelled.

FOR FURTHER INFORMATION CONTACT: Michael L. Slaughter of the Regulations Unit, Assistant Chief Counsel (Corporate), (202) 622–7180 (not a toll-free number).

SUPPLEMENTARY INFORMATION: A notice of proposed rulemaking; notice of proposed rulemaking by cross-reference to temporary regulations; and notice of public hearing that appeared in the **Federal Register** on Monday, January 11, 1999 (64 FR 1571), announced that a public hearing was scheduled for

Wednesday, May 26, 1999, at 10 a.m., in room 2615, Internal Revenue Building, 1111 Constitution Avenue, NW., Washington, DC. The subject of the public hearing is proposed regulations under sections 861 and 865 of the Internal Revenue Code. The public comment period for these proposed regulations expired on Wednesday, May 5, 1999. The outlines of topics to be addressed at the hearing were due on Wednesday, May 5, 1999.

The notice of proposed rulemaking and notice of public hearing, instructed those interested in testifying at the public hearing to submit a request to speak and an outline of the topics to be addressed. As of May 10, 1999, no one has requested to speak. Therefore, the public hearing scheduled for Wednesday, May 26, 1999, is cancelled.

Michael L. Slaughter,

Acting Chief, Regulations Unit, Assistant Chief Counsel (Corporate).

[FR Doc. 99–12167 Filed 5–13–99; 8:45 am]

BILLING CODE 4830–01–P

DEPARTMENT OF TRANSPORTATION

Coast Guard

33 CFR Part 117

[CGD05–99–006]

RIN 2115–AE47

Drawbridge Operation Regulations; Sassafras River, Georgetown, MD

AGENCY: Coast Guard, DOT.

ACTION: Notice of proposed rulemaking.

SUMMARY: At the request of the Maryland Department of Transportation (MDOT), the Coast Guard is proposing to change the regulations that govern the operation of the Maryland Route 213 drawbridge across the Sassafras River, Mile 10.0, at Georgetown, Maryland. The proposed rule would restrict drawbridge openings from November 1 through March 31, from midnight to 8 a.m., by requiring a six-hour advance notice for drawbridge openings. This change is intended to eliminate the need to have the bridge constantly manned during times of minimal use while still providing for the reasonable needs of navigation.

DATES: Comments must reach the Coast Guard on or before July 13, 1999.

ADDRESSES: Comments may be mailed to Commander (Aowb), Fifth Coast Guard District, Federal Building, 4th Floor, 431 Crawford Street, Portsmouth, Virginia 23704–5004, or may be hand delivered to the same address between 8 a.m. and 4:30 p.m., Monday through Friday, except Federal holidays. The telephone number is (757) 398–6222. Comments will become a part of this docket and will be available for inspection and copying at the above address.

FOR FURTHER INFORMATION CONTACT: Ann B. Deaton, Bridge Administrator, Fifth Coast Guard District, at 757–398–6222.

SUPPLEMENTARY INFORMATION:

Request for Comments

The Coast Guard encourages interested parties to participate in this rulemaking by submitting written data, views, or arguments. Persons submitting comments should include their names and addresses, identify this rulemaking (CGD05–99–006) and the specific section of this proposal to which each comment applies, and give the reason for each comment. Please submit two copies of all comments and attachments in an unbound format, no larger than 8½ by 11 inches, suitable for copying and electronic filing. If not practical, a second copy of any bound material is requested. Persons wanting acknowledgment of receipt of comments should enclose stamped, self-addressed postcards or envelopes.

The Coast Guard will consider all comments received during the comment period. It may change this proposal in view of the comments.

The Coast Guard plans no public hearing. Persons may request a public hearing by writing to the Commander, Fifth Coast Guard District, at the address under **ADDRESSES**. The request should include reasons why a hearing would be beneficial. If it determines that the opportunity for oral presentations will aid this rulemaking, the Coast Guard will hold a public hearing at a time and place announced by a later notice in the **Federal Register**.

Background and Purpose

The Maryland Route 213 drawbridge across the Sassafras River, Mile 10.0, at Georgetown, Maryland, is currently required to open on signal year-round. The Maryland Department of Transportation (MDOT) has requested that the Coast Guard change the operating schedule for the drawbridge by requiring a six-hour advance notice to open the bridge from November 1 to March 31, from midnight to 8 a.m. Review of MDOT's bridge logs from 1993 to 1997 reveals a total of 29 bridge openings for the five year period during the months from November 1 through March 31, an average of 1.2 openings per month. Considering the low number of openings that have occurred during the November through March time period, the Coast Guard believes that these proposed changes will not unduly restrict navigation.

Discussion of Proposed Amendment

The Coast Guard proposes a new regulation governing the operation of the Maryland Route 213 drawbridge across the Sassafras River, mile 10.0, at Georgetown, Maryland. The proposed regulation would restrict openings of the Sassafras River drawbridge from November 1 through March 31, from midnight to 8 a.m. During this period, the bridge need only open if a six-hour notice is given to MDOT. A sign would be posted at the bridge to provide MDOT's 24-hour telephone number.

Regulatory Evaluation

This proposed rule is not a significant regulatory action under section 3(f) of Executive Order 12866 and does not require an assessment of potential costs and benefits under section 6(a)(3) of that Order. It has not been reviewed by the Office of Management and Budget under that Order. It is not significant under the regulatory policies and procedures of the Department of Transportation (DOT) (44 FR 11040; February 26, 1979). The Coast Guard reached this conclusion based on the fact that the proposed changes will not prevent mariners from transiting the bridge, but merely require mariners to adhere to the proposed new operation procedures during times of minimal use of the bridge. The Coast Guard expects the economic impact of this proposed rule to be so minimal that a full Regulatory Evaluation under paragraph 10e of the regulatory policies and procedures of DOT is unnecessary.

Small Entities

Under the Regulatory Flexibility Act (5 U.S.C. 601 *et seq.*), the Coast Guard considered whether this proposed rule, if adopted, will have a significant economic impact on a substantial number of small entities. ''Small entities'' include small businesses, not-for-profit organizations that are independently owned and operated and are not dominant in their fields, and governmental jurisdictions with populations of less than 50,000. Because it expects the impact of this proposal to be minimal, the Coast Guard certifies under 5 U.S.C. 605(b) that this proposed rule, if adopted, will not have a significant economic impact on a substantial number of small entities. If, however, you think that your business or organization qualifies as a small entity and that this proposed rule will have a significant economic impact on your business or organization, please submit a comment (see **ADDRESSES**) explaining why you think it qualified

and in what way and to what degree this proposed rule will economically affect it.

Assistance for Small Entities

In accordance with section 213(a) of the Small Business Regulatory Enforcement Fairness Act of 1996 (Pub. L. 104–121), the Coast Guard wants to assist small entities in understanding this proposed rule so that they can better evaluate its effects on them and participate in the rulemaking process. If your small business or organization is affected by this rule and you have questions concerning its provisions or options for compliance, please contact the Commander, Fifth Coast Guard District, at the address under **ADDRESSES.**

Unfunded Mandates

Under section 201 of the Unfunded Mandates Reform Act (UMRA) (2 U.S.C. 1531), the Coast Guard assessed the effects of this proposed rule on State, local, and tribal governments, in the aggregate, and the private sector. The Coast Guard determined that this regulatory action requires no written statement under section 202 of the UMRA (2 U.S.C. 1532) because it will not result in the expenditure of $100,000,000 in any one year by State, local, or tribal governments, in the aggregate, or the private sector.

Collection of Information

This proposed rule does not provide for a collection of information under the Paperwork Reduction Act of 1995 (14 U.S.C. 3501 *et seq.*).

Federalism

The Coast Guard has analyzed this proposed rule under the principles and criteria contained in Executive Order 12612, and has determined that this proposed rule does not have sufficient federalism implications to warrant the preparation of a Federalism Assessment.

Environment

The Coast Guard considered the environmental impact of this proposal and concluded that under figure 2–1, paragraph (32)(e) of Commandant Instruction M16475.1C, this proposed rule is categorically excluded from further environmental documentation because it is a drawbridge operating regulation. A ''Categorical Exclusion Determination'' is available in the docket for inspection or copying where indicated under **ADDRESSES**.

List of Subjects in 33 CFR Part 117

Bridges.

Regulation

For the reasons discussed in the preamble, the Coast Guard proposes to amend 33 CFR part 117 as follows:

PART 117—[AMENDED]

1. The authority citation for part 117 continues to read as follows:

Authority: 33 U.S.C. 499; 49 CFR 1.46; 33 CFR 1.05–1(g); Section 117.255 also issued under the authority of Pub. L. 102–587, 106 Stat. 5039.

2. A new § 117.570 is added to read as follows:

§ 117.570 Sassafras River.

The draw of the Sassafras River (Route 213) bridge, mile 10.0, at Georgetown, Maryland shall open on signal; except that from November 1 through March 31, from midnight to 8 a.m., the draw need only open if at least a six-hour advance notice is given.

Dated: May 4, 1999.

Roger T. Rufe, Jr.,

Vice Admiral, U.S. Coast Guard, Commander, Fifth Coast Guard District.

[FR Doc. 99–12275 Filed 5–13–99; 8:45 am]

BILLING CODE 4910–15–M

DEPARTMENT OF TRANSPORTATION

Coast Guard

33 CFR Part 117

[CGD05–99–003]

RIN 2115–AE47

Drawbridge Operation Regulations; Miles River, Easton, MD

AGENCY: Coast Guard, DOT.

ACTION: Notice of proposed rulemaking.

SUMMARY: At the request of the Maryland Department of Transportation (MDOT), the Coast Guard is proposing to change the regulations that govern the operation of the Maryland Route S370 drawbridge across Miles River, Mile 10.0, at Easton, Maryland. The proposed rule would restrict drawbridge openings from November 1 through March 31, 24 hours a day, and from April 1 through October 31, from 6 p.m. to 6 a.m., by requiring a six-hour advance notice for drawbridge openings. At all other times the bridge would open on signal. This change is intended to eliminate the need to have the bridge constantly manned during times of minimal use while still providing for the reasonable needs of navigation.

DATES: Comments must reach the Coast Guard on or before July 13, 1999.

ADDRESSES: Comments may be mailed to Commander (Aowb), Fifth Coast Guard District, Federal Building, 4th Floor, 431 Crawford Street, Portsmouth, Virginia 23704–5004, or may be hand delivered to the same address between 8 a.m. and 4:30 p.m., Monday through Friday, except Federal holidays. The telephone number is (757) 398–6222. Comments will become a part of this docket and will be available for inspection and copying at the above address.

FOR FURTHER INFORMATION CONTACT: Ann B. Deaton, Bridge Administrator, Fifth Coast Guard District, at 757–398–6222.

SUPPLEMENTARY INFORMATION:

Request for Comments

The Coast Guard encourages interested parties to participate in this rulemaking by submitting written data, views, or arguments. Persons submitting comments should include their names and addresses, identify this rulemaking (CGD05–99–003) and the specific section of this proposal to which each comment applies, and give the reason for each comment. Please submit two copies of all comments and attachments in an unbound format, no larger than 8½ by 11 inches, suitable for copying and electronic filing. if not practical, a second copy of any bound material is requested. Persons wanting acknowledgment of receipt of comments should enclose stamped, self-addressed postcards or envelopes.

The Coast Guard will consider all comments received during the comment period. It may change this proposal in view of the comments.

The Coast Guard plans no public hearing. Persons may request a public hearing by writing to the Commander, Fifth Coast Guard District, as the address under **ADDRESSES**. The request should include reasons why a hearing would be beneficial. If it determines that the opportunity for oral presentations will aid this rulemaking, the Coast Guard will hold a public hearing at a time and place announced by a later notice in the **Federal Register.**

Background and Purpose

The Maryland Route S370 drawbridge across the Miles River, Mile 10.0, at Easton, Maryland, is currently required to open on signal from sunrise to sunset. A vessel wishing to pass through the draw between sunset to sunrise shall notify the drawtender of the time at which it is desired to pass and the draw shall open as close to the time requested as practicable.

The Maryland Department of Transportation (MDOT) has requested that the Coast Guard change the

operating schedule of the S370 Miles River Bridge, from November 1 through March 31, 24 hours a day, and from April 1 through October 31, from 6 p.m. to 6 a.m., by requiring a six-hour advance notice for drawbridge openings. At all other times the bridge will open on signal. This change is requested to eliminate the need for a drawtender to be present when there are a minimal number or no bridge openings. Review of MDOT's bridge logs from 1997 to 1998 revealed a total of 4 bridge openings for the two-year period during the months from November 1 through March 31. The review also clearly revealed a reduced number of drawbridge openings during the months from April 1 through October 31 between the hours of 6 p.m. and 6 a.m. The Coast Guard conducted a field study of the local marinas and waterway users. No adverse comments were received during the field study. This bridge is located in a rural upriver location with little or not nighttime navigation. The Coast Guard believes that these proposed changes will not unduly restrict navigation.

Discussion of Proposed Amendment

The Coast Guard proposes to amend 33 CFR 117.565, which governs the S370 Miles River Bridge, across Miles River, Mile 10.0, at Easton, Maryland, to restrict openings of the bridge from November 1 through March 31, 24 hours a day, and from April 1 through October 31, 6 p.m. to 6 a.m. During these periods, the bridge need only open if a six-hour notice is given to MDOT. A sign would be posted at the bridge to provide MDOT's 24-hour telephone number. At all other times the bridge will open on signal.

Regulatory Evaluation

This proposed rule is not a significant regulatory action under section 3(f) of Executive Order 12866 and does not require an assessment of potential costs and benefits under section 6(a)(3) of that Order. It has not been reviewed by the Office of Management and Budget under that Order. It is not significant under the regulatory policies and procedures of the Department of Transportation (DOT) (44 FR 11040; February 26, 1979). The Coast Guard reached this conclusion based on the fact that the proposed changes will not prevent mariners from transiting the bridge, but merely require mariners to adhere to the proposed new operation procedures during times of minimal use of the bridge. The Coast Guard expects the economic impact of this proposed rule to be so minimal that a full Regulatory Evaluation under paragraph 10e of the regulatory policies and procedures of DOT is unnecessary.

Small Entities

Under the Regulatory Flexibility Act (5 U.S.C. 601 *et seq.*), the Coast Guard considered whether this proposed rule, if adopted, will have a significant economic impact on a substantial number of small entities. ''Small entities'' include small businesses, not-for-profit organizations that are independently owned and operated and are not dominant in their fields, and governmental jurisdictions with populations of less than 50,000. Because it expects the impact of this proposal to be minimal, the Coast Guard certifies under 5 U.S.C. 605(b) that this proposed rule, if adopted, will not have a significant economic impact on a substantial number of small entities. If, however, you think that your business or organization qualifies as a small entity and that this proposed rule will have a significant economic impact on your business or organization, please submit a comment (see **ADDRESSES**) explaining why you think it qualifies and in what way and to what degree this proposed rule will economically affect it.

Assistance for Small Entities

In accordance with section 213(a) of the Small Business Regulatory Enforcement Fairness Act of 1996 (Pub. L. 104–121), the Coast Guard wants to assist small entities in understanding this proposed rule so that they can better evaluate its effects on them and participate in the rulemaking process. If your small business or organization is affected by this rule and you have questions concerning its provisions or options for compliance, please contact the Commander, Fifth Coast Guard District, at the address under **ADDRESSES**.

Unfunded Mandates

Under section 201 of the Unfunded Mandates Reform Act (UMRA) (2 U.S.C. 1531), the Coast Guard assessed the effects of this proposed rule on State, local, and tribal governments, in the aggregate, and the private sector. The Coast Guard determined that this regulatory action requires no written statement under section 202 of the UMRA (2 U.S.C. 1532) because it will not result in the expenditure of $100,000,000 in any one year by State, local, or tribal governments, in the aggregate, or the private sector.

Collection of Information

This proposed rule does not provide for a collection of information under the Paperwork Reduction Act of 1995 (44 U.S.C. 3501 *et se.*).

Federalism

The Coast Guard has analyzed this proposed rule under the principles and criteria contained in Executive Order 12612, and has determined that this proposed rule does not have sufficient federalism implications to warrant the preparation of a Federalism Assessment.

Environment

The Coast Guard considered the environmental impact of this proposal and concluded that under figure 2–1, paragraph (32)(e) of Commandant Instruction M16475.1C, this proposed rule is categorically excluded from further environmental documentation because it is a drawbridge operating regulation. A ''Categorical Exclusion Determination'' is available in the docket for inspection or copying where indicated under **ADDRESSES**.

List of Subjects in 33 CFR Part 117

Bridges.

Regulation

For the reasons discussed in the preamble, the Coast Guard proposes to amend 33 CFR part 117 as follows:

PART 117—[AMENDED]

1. The authority citation part 117 continues to read as follows:

Authority: 33 U.S.C. 499; 49 CFR 1.46; 33 CFR 1.05–1(g); section 117.255 also issued under the authority of Pub. L. 102–587, 106 Stat. 5039.

2. Section 117.565 is revised to read as follows:

§ 117.565 Miles River.

The draw of the Route S370 bridge, mile 10.0 at Easton, Maryland shall open on signal; except that from November 1 through March 31, 24 hours a day, and from April 1 through October 31, from 6 p.m. to 6 a.m., a six-hour advance notice to the drawtender is required for bridge openings.

Dated: May 4, 1999.

Roger T. Rufe, Jr.,

Vice Admiral, U.S. Coast Guard Commander, Fifth Coast Guard District.

[FR Doc 99–12274 Filed 5–13–99; 8:45 am]

BILLING CODE 4910–15–M

ENVIRONMENTAL PROTECTION AGENCY

40 CFR Part 52

[ME61–7010b; A–1–FRL–6338–1]

Approval and Promulgation of Air Quality Implementation Plans; Maine; Approval of Fuel Control Program Under Section 211(c)

AGENCY: Environmental Protection Agency. (EPA).

ACTION: Proposed rule.

SUMMARY: The EPA is proposing to approve a State Implementation Plan (SIP)— revision submitted by the State of Maine. This revision establishes and requires that all gasoline sold in York, Cumberland, Sagadahoc, Androscoggin, Kennebec, Knox and Lincoln counties meet certain summertime volatility limits, as measured by the Reid Vapor Pressure (RVP). In the Final Rules section of this **Federal Register**, EPA is approving the State's SIP submittal as a direct final rule without prior proposal because the Agency views this as a noncontroversial submittal and anticipates no adverse comments. Further, the State has requested approval of this action in advance of this summer season. A detailed rationale for the approval is set forth in the direct final rule. If no adverse comments are received in response to this action, no further activity is contemplated. If EPA receives adverse comments, the direct final rule will be withdrawn and all public comments received will be addressed in a subsequent final rule based on this proposed rule. EPA will not institute a second comment period. Any parties interested in commenting on this action should do so at this time.

DATES: Written comments must be received on or before June 14, 1999.

ADDRESSES: Comments may be mailed to Susan Studlien, Deputy Director, Office of Ecosystem Protection (mail code CAA), U.S. Environmental Protection Agency, Region I, One Congress Street, Boston, MA 02203. Copies of the State submittal and EPA's technical support document are available for public inspection during normal business hours, by appointment at the Office of Ecosystem Protection, U.S. Environmental Protection Agency, Region I, One Congress Street, 11th floor, Boston, MA and the Bureau of Air Quality Control, Department of Environmental Protection, 71 Hospital Street, Augusta, MEW 04333.

FOR FURTHER INFORMATION CONTACT: Robert C. Judge, (617) 918–1045.

SUPPLEMENTARY INFORMATION: For additional information, see the direct final rule which is located in the Rules section of this **Federal Register.**

Dated: April 29, 1999.

John P. DeVillars,

Regional Administrator, Region I.

[FR Doc. 99–11828 Filed 5–13–99; 8:45 am]

BILLING CODE 6560–50–P

DEPARTMENT OF TRANSPORTATION

National Highway Traffic Safety Administration

49 CFR Part 544

[Docket No.: 99–001; Notice 01]

RIN 2127–AH62

Insurer Reporting Requirements; List of Insurers Required To File Reports

AGENCY: National Highway Traffic Safety Administration (NHTSA), Department of Transportation (DOT).

ACTION: Notice of proposed rulemaking.

SUMMARY: NHTSA proposes to update its lists of passenger motor vehicle insurers that are required to file reports on their motor vehicle theft loss experiences. If these revised appendices are adopted in a final rule, each insurer included in any of these appendices must file a report for the 1996 calendar year not later than October 25, 1999. Further, as long as they remain listed, they must submit reports by each subsequent October 25.

DATES: Comments on this proposed rule must be received by this agency not later than July 13, 1999. If this rule is made final, insurers listed in the appendices would be required to submit reports beginning with the one due October 25, 1999.

ADDRESSES: Comments on this proposed rule must refer to the docket number referenced in the heading of this notice, and be submitted to: Docket Section, NHTSA, Room 5109, 400 Seventh Street, SW, Washington, DC 20590. Docket hours are 9:30 a.m. to 4 p.m., Monday through Friday.

FOR FURTHER INFORMATION CONTACT: Ms. Rosalind Proctor, Office of Planning and Consumer Programs, NHTSA, 400 Seventh Street, SW, Washington, DC 20590. Ms. Proctor's telephone number is (202) 366–0846. Her fax number is (202) 493–2739.

SUPPLEMENTARY INFORMATION:

Background

Pursuant to 49 U.S.C. 33112, Insurer reports and information, NHTSA requires certain passenger motor vehicle insurers to file an annual report. Each insurer's report includes information about thefts and recoveries of motor vehicles, the rating rules used by the insurer to establish premiums for comprehensive coverage, the actions taken by the insurer to reduce such premiums, and the actions taken by the insurer to reduce or deter theft. Under the agency's implementing regulation, 49 CFR part 544, the following insurers are subject to the reporting requirements: (1) Those issuers of motor vehicle insurance policies whose total premiums account for 1 percent or more of the total premiums of motor vehicle insurance issued within the United States; (2) those issuers of motor vehicle insurance policies whose premiums account for 10 percent or more of total premiums written within any one state; and (3) rental and leasing companies with a fleet of 20 or more vehicles not covered by theft insurance policies issued by insurers of motor vehicles, other than any governmental entity.

Pursuant to its statutory exemption authority, the agency has exempted smaller passenger motor vehicle insurers from the reporting requirements.

A. Small Insurers of Passenger Motor Vehicles

Section 33112(f)(2) provides that the agency shall exempt small insurers of passenger motor vehicles if NHTSA finds that such exemptions will not significantly affect the validity or usefulness of the information in the reports, either nationally or on a state-by-state basis. The term ''small insurer'' is defined, in section 33112(f)(1)(A) and (B), as an insurer whose premiums for motor vehicle insurance issued directly or through an affiliate, including pooling arrangements established under state law or regulation for the issuance of motor vehicle insurance, account for less than 1 percent of the total premiums for all forms of motor vehicle insurance issued by insurers within the United States. However, that section also stipulates that if an insurance company satisfies this definition of a ''small insurer,'' but accounts for 10 percent or more of the total premiums for all motor vehicle insurance issued in a particular state, the insurer must report about its operations in that state.

As described in the final rule establishing the requirement for insurer reports (52 FR 59; January 2, 1987), in 49 CFR Part 544, NHTSA exercises its exemption authority by listing in appendix A each insurer that must report because it had at least 1 percent of the motor vehicle insurance

premiums nationally. Listing the insurers subject to reporting instead of each insurer exempted from reporting because it had less than 1 percent of the premiums nationally is administratively simpler since the former group is much smaller than the latter. In Appendix B, NHTSA lists those insurers that are required to report for particular states because each insurer had a 10 percent or a greater market share of motor vehicle premiums in those states. In the January 1987 final rule, the agency stated that appendices A and B would be updated annually. NHTSA updates the appendices based on data voluntarily provided by insurance companies to A.M. Best, and made available for the agency each spring. The agency uses its *State/Line Report* data to determine the insurers' market shares nationally and in each state.

B. Self-insured Rental and Leasing Companies

In addition, upon making certain determinations, NHTSA is authorized to grant exemptions to self-insurers, i.e., any person who has a fleet of 20 or more motor vehicles (other than any governmental entity) which are used primarily for rental or lease and are not covered by theft insurance policies issued by insurers of passenger motor vehicles, 49 U.S.C. 33112(b)(1) and (f). NHTSA may exempt a self-insurer from reporting, if the agency determines:

(1) The cost of preparing and furnishing such reports is excessive in relation to the size of the business of the insurer; and

(2) The insurer's report will not significantly contribute to carrying out the purposes of Chapter 331.

In a final rule published June 22, 1990 (55 FR 25606), the agency granted a class exemption to all companies that rent or lease fewer than 50,000 vehicles because it believed that reports from only the largest companies would sufficiently represent the theft experience of rental and leasing companies. NHTSA concluded those reports by the many smaller rental and leasing companies do not significantly contribute to carrying out NHTSA's statutory obligations and that exempting such companies will relieve an unnecessary burden on most companies that potentially must report. As a result of the June 1990 final rule, the agency added a new appendix C which consists of an annually updated list of the self-insurers that are subject to part 544. Following the same approach, as in the case of appendix A, NHTSA included, in appendix C, each of the relatively few self-insurers which are subject to reporting instead of relatively numerous self-insurers which are exempted. NHTSA updates appendix C based primarily on information from the publications *Automotive Fleet Magazine and Business Travel News.*

C. When a Listed Insurer Must File a Report

Under part 544, as long as an insurer is listed, it must file reports on or before each October 25. Thus, any insurer listed in the appendices, as of the date of the most recent final rule, must file a report by the following October 25, and by each succeeding October 25, absent a further amendment removing the insurer's name from the appendices.

Notice of Proposed Rulemaking

1. Insurers of Passenger Motor Vehicles

Based on the 1996 calendar year A.M. Best's data for market shares, NHTSA proposes to amend the list in appendix A of insurers which must report because each had at least 1 percent of the motor vehicle insurance premiums on a national basis. The list was last amended in a notice published on December 18, 1998 (See 63 FR 70051). Three companies, Aetna Life & Casualty Group, Safeco Insurance Companies, and Travelers Insurance Group, are proposed to be removed from appendix A. One company, Travelers PC Group, is proposed to be added. ITT Hartford Insurance Company was renamed Hartford Insurance Company.

Each of the 18 insurers listed in appendix A would be required to file a report not later than October 25, 1999, setting forth the information required by part 544 for each state in which it did business in the 1996 calendar year. As long as those 18 insurers remain listed, they would be required to submit reports by each subsequent October 25 for the calendar year ending slightly less than 3 years before.

Appendix B lists those insurers that would be required to report for particular states for calendar year 1996, because each insurer had a 10 percent or a greater market share of motor vehicle premiums in those states. Based on the 1996 calendar year A.M. Best's data for market shares, it is proposed that Island Insurance Group, reporting on its activities in the state of Hawaii, be removed from appendix B.

The 11 insurers listed in appendix B of this notice would be required to report on their calendar year 1996 activities in every state in which they had a 10 percent or a greater market share. These reports must be filed no later than October 25, 1999, and set forth the information required by part 544. As long as those 11 insurers remain listed, they would be required to submit reports on or before each subsequent October 25 for the calendar year ending slightly less than 3 years before.

2. Rental and Leasing Companies

Based on information in *Automotive Fleet Magazine and Business Travel News* for 1996, the most recent year for which data are available, NHTSA proposes one change in appendix C. As indicated above, that appendix lists rental and leasing companies required to file reports. Based on the data reported in the above mentioned publications, it is proposed that one rental and leasing company, Citicorp Bankers Leasing Corporation, be removed from appendix C. Accordingly, each of the 19 companies (including franchisees and licensees) listed in this notice in appendix C would be required to file reports for calendar year 1996 no later than October 25, 1999, and set forth the information required by part 544. As long as those 19 companies remain listed, they would be required to submit reports on or before each subsequent October 25 for the calendar year ending slightly less than 3 years before.

Regulatory Impacts

1. Costs and Other Impacts

This notice has not been reviewed under Executive Order 12866. NHTSA has considered the impact of this proposed rule and has determined the action not to be ''significant'' within the meaning of the Department of Transportation's regulatory policies and procedures. This proposed rule implements the agency's policy of ensuring that all insurance companies that are statutorily eligible for exemption from the insurer reporting requirements are in fact exempted from those requirements. Only those companies that are not statutorily eligible for an exemption are required to file reports.

NHTSA does not believe that this proposed rule, reflecting more current data, affects the impacts described in the final regulatory evaluation prepared for the final rule establishing part 544 (52 FR 59, January 2, 1987). Accordingly, a separate regulatory evaluation has not been prepared for this rulemaking action. Using the cost estimates in the 1987 final regulatory evaluation, the agency estimates that the cost of compliance will be about $50,000 for any insurer that is added to appendix A, about $20,000 for any insurer added to appendix B, and about $5,770 for any insurer added to appendix C. If this proposed rule is

made final, for appendix A, the agency would add one insurer and remove three insurers; for appendix B, the agency would remove one insurer; and for appendix C, the agency would remove one company. The agency estimates that the net effect of this proposal, if made final, would be a cost decrease to insurers, as a group, of approximately $125,770.

Interested persons may wish to examine the 1987 final regulatory evaluation. Copies of that evaluation have been placed in Docket No. T86–01; Notice 2. Any interested person may obtain a copy of this evaluation by writing to NHTSA, Docket Section, Room 5109, 400 Seventh Street, SW, Washington, DC 20590, or by calling (202) 366–4949.

2. Paperwork Reduction Act

The information collection requirements in this proposed rule have been submitted to and approved by the Office of Management and Budget (OMB) pursuant to the requirements of the Paperwork Reduction Act (44 U.S.C. 3501 *et seq.*). This collection of information was assigned OMB Control Number 2127–0547 (''Insurer Reporting Requirements'') and was approved for use through July 31, 2000.

3. Regulatory Flexibility Act

The agency has also considered the effects of this rulemaking under the Regulatory Flexibility Act (RFA) (5 U.S.C. 601 *et seq.*). I certify that this proposed rule would not have a significant economic impact on a substantial number of small entities. The rationale for the certification is that none of the companies proposed to be included on appendices A, B, or C would be construed to be a small entity within the definition of the RFA. ''Small insurer'' is defined, in part under 49 U.S.C. 33112, as any insurer whose premiums for all forms of motor vehicle insurance account for less than 1 percent of the total premiums for all forms of motor vehicle insurance issued by insurers within the United States, or any insurer whose premiums within any state, account for less than 10 percent of the total premiums for all forms of motor vehicle insurance issued by insurers within the state. This notice would exempt all insurers meeting those criteria. Any insurer too large to meet those criteria is not a small entity. In addition, in this rulemaking, the agency proposes to exempt all ''self insured rental and leasing companies'' that have fleets of fewer than 50,000 vehicles. Any self insured rental and leasing company too large to meet that criterion is not a small entity.

4. Federalism

This action has been analyzed according to the principles and criteria contained in Executive Order 12612, and it has been determined that the proposed rule does not have sufficient federalism implications to warrant the preparation of a Federalism Assessment.

5. Environmental Impacts

In accordance with the National Environmental Policy Act, NHTSA has considered the environmental impacts of this proposed rule and determined that it would not have a significant impact on the quality of the human environment.

Interested persons are invited to submit comments on the proposal. It is requested but not required that two copies of the comments be submitted. All comments must not exceed 15 pages in length. (49 CFR 553.21). Necessary attachments may be appended to these submissions without regard to the 15 page limit. This limitation is intended to encourage commenters to detail their primary arguments in a concise fashion.

If a commenter wishes to submit certain information under a claim of confidentiality, two copies of the complete submission, including purportedly confidential business information, should be submitted to the Chief Counsel, NHTSA, at the street address given above, and one copy from which the purportedly confidential information has been deleted should be accompanied by a cover letter setting forth the information specified in the agency's confidential business information regulation. (49 CFR part 512).

All comments received before the close of business on the comment closing date indicated above for the proposal will be considered, and will be available for examination in the docket at the above address both before and after the date. To the extent possible, comments filed after the closing date will also be considered. Comments received too late for consideration regarding the final rule will be considered as suggestions for further rulemaking action. Comments on the proposal will be available for inspection in the docket. NHTSA will continue to file relevant information, as it becomes available in the docket after the closing date. It is recommended that interested persons continue to examine the docket for new material.

Those persons desiring to be notified upon receipt of their comments in the rules docket should enclose a self-addressed, stamped postcard in the envelope with their comments. Upon receiving the comments, the docket supervisor will return the postcard by mail.

List of Subjects in 49 CFR Part 544

Crime insurance, Insurance, Insurance companies, Motor vehicles, Reporting and recordkeeping requirements.

In consideration of the foregoing, 49 CFR part 544 is proposed to be amended as follows:

PART 544—[AMENDED]

1. The authority citation for part 544 would continue to read as follows:

Authority: 49 U.S.C. 33112; delegation of authority at 49 CFR 1.50.

2. Paragraph (a) of § 544.5 would be revised to read as follows:

§ 544.5 General requirements for reports.

(a) Each insurer to which this part applies shall submit a report annually not later than October 25, beginning on October 25, 1986. This report shall contain the information required by § 544.6 of this part for the calendar year three years previous to the year in which the report is filed (e.g., the report due by October 25, 1999 would contain the required information for the 1996 calendar year).

* * * * *

3. Appendix A to Part 544 would be revised to read as follows:

Appendix A—Insurers of Motor Vehicle Insurance Policies Subject to the Reporting Requirements in Each State in Which They Do Business

Allstate Insurance Group
American Family Insurance Group
American Financial Group
American International Group
California State Auto Association
CNA Insurance Group
Erie Insurance Group
Farmers Insurance Group
GEICO Corporation Group/Berkshire Hathaway
Hartford Insurance Group
Liberty Mutual Group
Nationwide Group
Progressive Group
Prudential of America Group
State Farm Group
Travelers PC Group[1]
USAA Group
Zurich Insurance Group-U.S.

4. Appendix B to part 544 would be revised to read as follows:

Appendix B—Insurers of Motor Vehicle Insurance Policies Subject to the Reporting Requirements Only in Designated States

Alfa Insurance Group (Alabama)
Allmerica P & C Companies (Michigan)

[1] Indicates a newly listed company which must file a report beginning with the report due on October 25, 1999.

Arbella Mutual Insurance (Massachusetts)
Auto Club of Michigan Group (Michigan)
Commerce Group, Inc. (Massachusetts)
Commercial Union Insurance Companies (Maine)
Concord Group Insurance Companies (Vermont)
Kentucky Farm Bureau Group (Kentucky)
Nodak Mutual Insurance Company (North Dakota)
Southern Farm Bureau Group (Arkansas, Mississippi)
Tennessee Farmers Companies (Tennessee)

5. Appendix C to part 544 would be revised to read as follows:

Appendix C—Motor Vehicle Rental and Leasing Companies (Including Licensees and Franchisees) Subject to the Reporting Requirements of Part 544

Alamo Rent-A-Car, Inc.
ARI (Automotive Rentals, Inc.)
Associates Leasing Inc.
AT&T Automotive Services, Inc.
Avis, Inc.
Budget Rent-A-Car Corporation
Dollar Rent-A-Car Systems, Inc.
Donlen Corporation
Enterprise Rent-A-Car
GE Capital Fleet Services
Hertz Rent-A-Car Division (subsidiary of Hertz Corporation)
Lease Plan USA, Inc.
National Car Rental System, Inc.
Penske Truck Leasing Company
PHH Vehicle Management Services
Ryder System, Inc. (Both rental and leasing operations)
U-Haul International, Inc. (Subsidiary of AMERCO)
USL Capital Fleet Services
Wheels Inc.

Issued on: May 10, 1999.

L. Robert Shelton,

Associate Administrator for Safety Performance Standards.

[FR Doc. 99–12234 Filed 5–13–99; 8:45 am]

BILLING CODE 4910–59–P

DEPARTMENT OF COMMERCE

National Oceanic and Atmospheric Administration

50 CFR Parts 223, 224, and 226

[Docket No. 990504118–9118–01; I.D. 031199F]

RIN 0648–XA25

Endangered and Threatened Species; Notification of Finding on a Petition to List Summer Steelhead Trout in the Middle Fork of the Eel River, California

AGENCY: National Marine Fisheries Service (NMFS), National Oceanic and Atmospheric Administration (NOAA), Commerce.

ACTION: Notification of petition finding.

SUMMARY: NMFS announces a finding for a petition to list summer steelhead trout (*Oncorhynchus mykiss*) and designate critical habitat in the Middle Fork of the Eel River, California, pursuant to the Endangered Species Act (ESA) of 1973. NMFS finds that the petitioner has not presented any new, substantial scientific or commercial information indicating that the petitioned action may be warranted. NMFS previously reviewed the data which was submitted by the petitioner for this population and has published its findings in a west coast status review for steelhead trout and subsequent **Federal Register** documents (see ''Previous Federal ESA Actions Related to West Coast Steelhead'').

DATES: The finding announced in this document was made on April 29, 1999.

ADDRESSES: Requests for information concerning this petition should be sent to Chief, Endangered Species Division, Office of Protected Resources, National Marine Fisheries Service, 1315 East West Highway, Silver Spring, MD 20910; telephone: (301)713–1401.

FOR FURTHER INFORMATION CONTACT: Craig Wingert at (562) 980–4021 or Chris Mobley at (301)713–1401.

SUPPLEMENTARY INFORMATION:

Background

Section 4(b)(3)(A) of the ESA of 1973, as amended (16 U.S.C *et seq.*), requires that NMFS make a finding on whether a petition to list a species presents substantial scientific or commercial information to demonstrate that the petitioned action may be warranted. NMFS' standard for substantial information is stated at 50 CFR 424.14(b) as ''that amount of information that would lead a reasonable person to believe that the measure proposed in the petition may be warranted.'' This finding is to be based on all information available to NMFS at the time. To the maximum extent practicable, this finding is to be made within 90 days of the receipt of the petition, and the finding is to be published promptly in the **Federal Register**. If the finding is positive, NMFS is also required to promptly commence a review of the status of the involved species.

NMFS has made a 90-day finding on a petition to list summer steelhead trout (*O. mykiss*) in the Middle Fork of the Eel River, California, and designate critical habitat pursuant to the ESA. The petition, dated December 10, 1998, was submitted by Mr. David Drell, representing the Willits Environmental Center, and received by NMFS on December 15, 1998. The petitioner requested that NMFS list summer steelhead trout in the Middle Fork of the Eel River, California, as endangered on an emergency basis, and also designate critical habitat for that population under the ESA.

Previous Federal ESA Actions Related to West Coast Steelhead

On May 20, 1993, NMFS announced its intent to conduct a status review to identify all coastal steelhead Evolutionarily Significant Units (ESUs) within California, Oregon, and Washington and to determine whether any identified ESUs warranted listing under the ESA. Subsequently, on February 16, 1994, NMFS received a petition from the Oregon Natural Resources Council and 15 co-petitioners to list all steelhead (or specific ESUs, races, or stocks) within the states of California, Oregon, Washington, and Idaho. In response to this petition, NMFS announced the expansion of its status review to include inland steelhead populations occurring in eastern Washington and Oregon and the State of Idaho (59 FR 27527, May 27, 1994).

In August 1996, NMFS published the results of its status review for west coast steelhead (Busby *et al.*, 1996; NOAA Technical Memorandum NMFS-NWFSC–27). Based on a review of the available information on steelhead genetics, phylogeny and life history, and environmental features that may affect steelhead, NMFS identified a total of 15 ESUs of west coast steelhead, including 12 ESUs for the coastal form and 3 for the inland form. One of the coastal ESUs, the Northern California coast steelhead ESU, includes the summer steelhead population in the Middle Fork Eel River which is the subject of the petitioned action.

On August 9, 1996, NMFS published a proposed rule to list 10 of these steelhead ESUs as threatened or endangered under the ESA and solicited comments on the proposal (61 FR 41541, August 9, 1996). In the proposed rule, NMFS determined that the Northern California coast ESU, which includes all summer- and winter-run steelhead populations from Redwood Creek in Humboldt County through the Gualala River, inclusive, warranted listing as a threatened species.

On August 18, 1997, NMFS published a final rule listing five steelhead ESUs as threatened or endangered under the ESA (62 FR 43937). In a separate document also published on August 18, 1997, NMFS determined that substantial scientific disagreement remained for five proposed steelhead ESUs, including the Northern California coast steelhead

ESU (62 FR 43974, August 18, 1997). In accordance with section 4(b)(6)(B)(i) of the ESA, NMFS deferred its decision on these five remaining steelhead ESUs for 6 months, until February 9, 1998, for the purpose of soliciting and analyzing additional data. By court order, NMFS' deadline for issuing final determinations on these five remaining steelhead ESUs was extended to March 13, 1998.

During the 6-month period of deferral, NMFS received new scientific information concerning the status of the proposed ESUs. This new information was considered by NMFS' Biological Review Team (BRT) and incorporated into an updated status review that analyzed and summarized the new information [Memorandum to William Stelle and William Hogarth from M. Schiewe, December 18, 1997, Status of Deferred and Candidate ESUs of West Coast Steelhead]. In the update, NMFS re-examined and addressed several issues relating to ESU definitions and risk assessment for the deferred ESUs, which included the Northern California coast steelhead ESU. In addition to other issues, the re-examination included the issue of including both summer and winter steelhead populations in the same ESU. Also during this period, NMFS assessed the status of existing hatchery stocks to determine their ESU status [Memorandum to William Stelle and William Hogarth from Michael Schiewe, January 13, 1998, Status Review Update for Deferred ESUs of West Coast Steelhead: Hatchery Populations]. Copies of these memoranda are available upon request (see **ADDRESSES**).

On March 19, 1998, NMFS published a final rule to list the previously deferred Lower Columbia River and Central Valley steelhead ESUs as threatened species (63 FR 13347). In the same document, NMFS determined that the three other deferred steelhead ESUs, which included the Oregon Coast, Klamath Mountains Province (KMP), and Northern California coast ESUs, did not warrant listing, based on the best available scientific information and a review of conservation efforts being made. However, NMFS indicated that it remained concerned about the status of steelhead trout in these three ESUs, and, therefore, classified them as candidate species. In addition, NMFS committed to re-evaluate the status of these three ESUs within 4 years to determine whether listing was warranted at that time.

Analysis of Petition

The petitioner requested that NMFS list summer steelhead trout in the Middle Fork of the Eel River, California, as endangered on an emergency basis and also designate critical habitat for that population under the ESA. In support of the petition, the petitioner submitted various documents and information to NMFS. The petitioner requested that the population be listed on an emergency basis due to a large landslide that was identified as severely impacting the ability of the population to reproduce, as well as habitat degradation from historic and continuing land use activities (i.e. agriculture and associated activities) occurring in the basin. The petitioner also cited continuing low returns of adults, severe poaching, and genetic differences between summer and winter steelhead trout as additional reasons to list this population.

As noted in the preceding section of this document, NMFS has previously identified a coastal steelhead ESU (i.e. the Northern California coast steelhead ESU) which includes the Middle Fork Eel River summer steelhead population (Busby *et al.*, 1996; 61 FR 41541, August 9, 1996; and 63 FR 13347, March 19, 1998). NMFS used its existing policies on how it would define ''species'' or ''distinct population segments'' under the ESA in reaching its determination that the Northern California coast steelhead ESU was the proper population unit to consider for listing under the ESA. These policies include NMFS' original November 20, 1991, policy describing how it would apply the ESA definition of ''species'' to anadromous salmonid species (56 FR 58612), and a more recent joint NMFS and Fish and Wildlife Service policy regarding the definition of ''distinct population segments'' (61 FR 4722, February 7, 1996).

Under these policies, NMFS considers one or more naturally reproducing salmonid populations to be distinct, and therefore, a ''species'' under the ESA, if they represent an ESU of the biological species. To be considered an ESU, a population must satisfy two criteria: (1) It must be reproductively isolated from other population units of the same species, and (2) it must represent an important component in the evolutionary legacy of the biological species. The first criterion, reproductive isolation, need not be absolute but must have been strong enough to permit evolutionarily important differences to occur in different population units. The second criterion is met if the population contributes substantially to the ecological or genetic diversity of the species as a whole. Guidance on applying this policy is contained in a NOAA Technical Memorandum entitled ''Definition of 'Species' Under the Endangered Species Act: Application to Pacific Salmon'' (Waples, 1991). Copies of the policies and the Technical Memorandum are available upon request (see **ADDRESSES**).

The Northern California coast steelhead ESU, which includes the Middle Fork Eel River summer steelhead population, is comprised of all steelhead populations that occupy coastal river basins ranging from Redwood Creek in Humboldt County to the Gualala River, inclusive. Dominant vegetation along the coast is redwood forest, while some interior basins are much drier than surrounding areas and are characterized by many endemic species. This area includes the extreme southern end of the contiguous portion of the Coast Range Ecoregion (Omernick, 1987). Elevated stream temperatures are a factor in some of the larger river basins (greater than 20° C), but not to the extent that they are in river basins farther south. Precipitation is generally higher in this geographic area than in regions to the south, averaging 100 to 200 centimeters of rainfall annually (Donley *et al.*, 1979). With the exception of major river basins such as the Eel, most rivers in this region have peak flows of short duration. Strong and consistent coastal upwelling begins at about Cape Blanco and continues south into central California, resulting in a relatively productive near-shore marine environment.

The Northern California coast ESU includes both winter and summer steelhead populations, including the Middle Fork Eel River summer steelhead population, which is presently considered to be the southernmost population of summer steelhead. Half-pounder juveniles also occur in this ESU, specifically in the Mad and Eel Rivers. Snyder (1925) first described the half-pounder from the Eel River; however, Cramer *et al.* (1995) suggested that adults with the half-pounder juvenile life history may not spawn south of the Klamath River Basin. As with the Rogue and Klamath Rivers, some of the larger rivers in this area have migrating steelhead year-round, and seasonal runs have been named. River entry ranges from August through June and spawning from December through April, with peak spawning in January in the larger basins and late February and March in the smaller coastal basins.

The petitioner cited genetic differences between summer and winter run steelhead as a key factor for requesting that NMFS list the Middle Fork Eel River summer steelhead

population. While NMFS considers both life history forms of steelhead (winter and summer) to be important components of diversity within the species and individual ESUs, the best and most recently available genetic data reinforces previous conclusions that within a given geographic area, summer and winter steelhead typically are more genetically similar to one another than either is to populations with similar run timing in different geographic areas or ESUs (Busby *et al*, 1996; Memorandum from M. Schiewe dated December 18, 1997, Status of Deferred and Candidate ESUs of West Coast Steelhead). These genetic relationships suggest that an ESU which included only summer-run populations (or conversely only winter-run populations) from different geographic areas would be an inappropriate population unit to consider for listing. The only biologically meaningful way to have summer and winter steelhead populations in separate ESUs would be to have a very large number of very small ESUs, most consisting of just one or a very few populations. This would be inconsistent with the conservative approach NMFS has taken in defining ESUs (i.e. distinct population segments) for other anadromous Pacific salmonids. Taking these factors into consideration, NMFS has previously determined that summer and winter steelhead should be considered part of the same ESU in geographic areas where they co-occur (Busby *et al*., 1996; 61 FR 41541, August 9, 1996; and 63 FR 13347, March 19, 1998), including the Northern California coast steelhead ESU.

NMFS agrees with the petitioner that many factors, past and present, have contributed to the decline of steelhead in the Northern California coast ESU and elsewhere on the west coast. NMFS also recognizes that natural environmental fluctuations have likely played a role in the species' recent declines. For listed or candidate steelhead trout ESUs, the present condition of the population is a result of long-standing, human-induced conditions (i.e., harvest, habitat degradation, and artificial propagation) that serve to exacerbate the negative effects of adverse environmental conditions (i.e., drought and poor ocean conditions). These human-induced impacts have likely reduced the species' resiliency to such natural factors for decline as drought and poor ocean conditions (NMFS, 1996). Relative to west coast steelhead, NMFS has prepared a supporting document that addresses the factors leading to the decline of this species entitled ''Factors for Decline: A Supplement to the Notice of Determination for West Coast Steelhead'' (NMFS, 1996). This report, which is available upon request (see ADDRESSES), concludes that all of the factors identified in section 4(a)(1) of the ESA have played a role in the decline of the species. The report identifies destruction and modification of habitat, overutilization for recreational purposes, and natural and human-made factors as being the primary reasons for the decline of west coast steelhead.

Determination

NMFS previously reviewed the information submitted by the petitioner and has published its findings in a west coast status review for steelhead trout and subsequent **Federal Register** documents (see ''Previous Federal ESA Actions Related to West Coast Steelhead''). NMFS believes that information contained in its status review (Busby *et al*., 1996) and other reports (NMFS, 1996; and NMFS, 1996b) for west coast steelhead, together with more recent information obtained in response to the proposed and final rules (see ''Previous Federal ESA Actions Related to West Coast Steelhead''), represent the best scientific information presently available for northern California coast steelhead. NMFS has conducted an exhaustive review of all available information relevant to the status of this species. NMFS has also solicited information and opinion from all interested parties, including peer reviewers.

NMFS has reviewed the petition, the literature cited in the petition, and other available literature and information. Based on this review, NMFS finds that the petitioned action does not present substantial new information indicating that listing summer steelhead in the Middle Fork Eel River, California, may be warranted.

Authority: 16 U.S.C. 1531 *et seq*.

Dated: May 10, 1999.

Penelope D. Dalton,

Assistant Administrator for Fisheries, National Marine Fisheries Service.

[FR Doc. 99–12271 Filed 5–13–99; 8:45 am]

BILLING CODE 3510–22–F

Notices

Federal Register
Vol. 64, No. 93
Friday, May 14, 1999

This section of the FEDERAL REGISTER contains documents other than rules or proposed rules that are applicable to the public. Notices of hearings and investigations, committee meetings, agency decisions and rulings, delegations of authority, filing of petitions and applications and agency statements of organization and functions are examples of documents appearing in this section.

DEPARTMENT OF AGRICULTURE

Agricultural Marketing Service

[Docket No. TB–99–05]

Burley Tobacco Advisory Committee; Meeting

In accordance with the Federal Advisory Committee Act (5 U.S.C. App.) announcement is made of the following committee meeting:

Name: Burley Tobacco Advisory Committee.

Date: June 10, 1999.

Time: 9:00 a.m.

Place: Campbell House Inn, South Colonial Hall, 1375 Harrodsburg Road, Lexington, Kentucky 40504.

Purpose: To elect officers, recommend opening dates, discuss selling schedules, review the 1999 policies and procedures, and other related matters for the 1999 burley tobacco marketing season.

The meeting is open to the public. Persons, other than members, who wish to address the Committee at the meeting should contact John P. Duncan III, Deputy Administrator, Tobacco Programs, AMS, U.S. Department of Agriculture, Room 502 Annex Building, P.O. Box 96456, Washington, D.C. 20090–6456, (202) 205–0567, prior to the meeting. Written statements may be submitted to the Committee before, at, or after the meeting. If you need any accommodations to participate in the meeting, please contact the Tobacco Programs at (202) 205–0567 by May 26, 1999, and inform us of your needs.

Dated: May 10, 1999.

John P. Duncan III,

Deputy Administrator, Tobacco Programs.

[FR Doc. 99–12237 Filed 5–13–99; 8:45 am]

BILLING CODE 3410–02–P

DEPARTMENT OF AGRICULTURE

Agricultural Research Service

Center for Nutrition Policy and Promotion

DEPARTMENT OF HEALTH AND HUMAN SERVICES

Office of Disease Prevention and Health Promotion

Dietary Guidelines Advisory Committee: Meeting Notice

AGENCIES: U.S. Department of Agriculture and U.S. Department of Health and Human Services.

ACTION: Dietary Guidelines Advisory Committee: Notice of the third meeting, and opportunity to provide written comments.

SUMMARY: The Department of Agriculture (USDA) and the Department of Health and Human Services (HHS) (a) provide notice of the third meeting of the Committee, and (b) solicit written comments.

DATES: (1) The Committee will meet on June 16 to 18, 1999, from 9:00 a.m. to 5:30 p.m. on the first day, from 9:00 a.m. to 3:00 p.m. on the second day, and from 9:00 a.m to 4:00 p.m. on the third day. (2) Written comments on the guidelines may be submitted by 5 p.m. e.d.t. on June 2, 1999, to ensure transmission to the Committee prior to this meeting.

FOR FURTHER INFORMATION CONTACT: Shanthy Bowman, Ph.D., USDA, Agricultural Research Service, Nutrient Data Laboratory, 4700 River Road, Unit 89, Riverdale, MD 20737, (301) 734–5640; Carole Davis, M.S., R.D., USDA Center for Nutrition Policy and Promotion, 1120 20th St., NW, Suite 200 North Lobby, Washington, DC 20036, (202) 418–2312; or Kathryn McMurry, M.S. or Linda Meyers, Ph.D., HHS, Office of Disease Prevention and Health Promotion, Office of Public Health and Science, Room 738-G, 200 Independence Ave., SW, Washington, DC 20201, (202) 205–4872.

SUPPLEMENTARY INFORMATION:

Dietary Guidelines Advisory Committee

The eleven-member Committee appointed by the Secretaries of the two Departments is chaired by Cutberto Garza, M.D., Ph.D., Cornell University, Ithaca, New York. Other members are Richard J. Deckelbaum, M.D., Columbia University, New York, New York; Johanna T. Dwyer, D.Sc., R.D., Tufts University, Boston, Massachusetts; Scott M. Grundy, M.D., Ph.D., University of Texas, Dallas, Texas; Rachel K. Johnson, Ph.D., R.D., University of Vermont, Burlington, Vermont; Shiriki K. Kumanyika, Ph.D., M.P.H., R.D., University of Illinois at Chicago, Chicago, Illinois; Alice H. Lichtenstein, D.Sc., Tufts University, Boston, Massachusetts; Suzanne P. Murphy, Ph.D., R.D., University of Hawaii, Honolulu, Hawaii; Meir J. Stampfer, M.D., Dr.P.H., Harvard School of Public Health, Boston, Massachusetts; Lesley Fels Tinker, Ph.D., R.D., University of Washington, Seattle, Washington; and Roland L. Weinsier, M.D., Dr.P.H., University of Alabama at Birmingham, Birmingham, Alabama.

Announcement of Meeting

The Committee's third meeting will be June 16–18, 1999 from 9:00 a.m. to 5:30 p.m. on the first day, from 9:00 a.m. to 3:00 p.m. on the second day, and from 9:00 a.m to 4:00 p.m. on the third day. The meeting is open to the public. However, space is limited for all sessions. Please call Shanthy Bowman at (301) 734–5640 by 5:00 p.m. e.d.t. June 2, 1999, should you require a sign language interpreter.

Location of Meeting

The meeting will be held at the Waugh Auditorium located on the third floor of USDA's Economic Research Service, 1800 M Street NW, Washington DC, one block from Farragut North metro station and three blocks from the Farragut West metro station. Parking is available at local garages. Entry to the building is through the South Lobby Tower. The agenda will include (a) presentations from invited experts, (b) discussion of drafts prepared by members, and (c) formulation of plans for future work of the Committee.

Written Comment

By this notice, the Committee is soliciting submission of written comments, views, information and data pertinent to review of the Dietary Guidelines for Americans. Written comments will be accepted throughout the process. To be considered for the third meeting, comments should be submitted by 5:00 p.m. e.d.t. June 2, 1999. Comments should be sent to

Shanthy Bowman Ph.D., at Department of Agriculture, Agricultural Research Service, Nutrient Data Laboratory, 4700 River Road, Unit 89, Riverdale, MD 20737.

Dated: May 10, 1999.

Edward Knipling,

Associate Administrator, Agricultural Research Service, Department of Agriculture.

Rajen Anand,

Executive Director, Center for Nutrition Policy and Promotion, Department of Agriculture.

Linda Meyers,

Acting Director, Office of Disease Prevention and Health Promotion, U.S. Department of Health and Human Services.

[FR Doc. 99–12201 Filed 5–13–99; 8:45 am]

BILLING CODE 3410–03–P

DEPARTMENT OF AGRICULTURE

Forest Service

Range Standards and Guidelines To Amend the Land and Resource Management Plans of the Eldorado and Tahoe National Forests, California

AGENCY: Forest Service, USDA.

ACTION: Revised notice of intent to prepare an environmental impact statement.

SUMMARY: The Department of Agriculture, Forest Service, Eldorado and Tahote National Forests, are preparing an environmental impact statement (EIS) for amendments to each Forest's Land and Resource Management Plan (LRMP). The amendments will modify existing LRMP grazing standards and guidelines for management, with the objective to maintain and improve rangeland ecosystems on both Forests. The Notice of Intent to prepare an Environmental Impact Statement was published in the **Federal Register** on Wednesday, August 13, 1997 (62 FR 43312–43314). The Notice announced that a draft environmental impact statement (draft EIS) would be available for review in November 1997. The draft EIS is now expected to be available by June 1999, and a final EIS should be available by November 1999.

FOR FURTHER INFORMATION CONTACT: Questions about the proposed action and environmental impact statement should be directed to Susan A. Rodman, ID Team Leader, Land Management Planning, Eldorado National Forest, 100 Forni Road, Placerville, CA 95667, or at (530) 621–5298.

Dated: May 4, 1999.

Gary A. Bilyeu,

Acting Forest Supervisor, Eldorado National Forest.

[FR Doc. 99–12125 Filed 5–13–99; 8:45 am]

BILLING CODE 3410–11–M

DEPARTMENT OF AGRICULTURE

National Agricultural Statistics Service

Notice of Reopening of Invitation for Nominations to the Advisory Committee on Agriculture Statistics

AGENCY: National Agricultural Statistics Service, USDA.

ACTION: Solicitation of nominations for Advisory Committee on Agriculture Statistics Membership.

SUMMARY: In accordance with the Federal Advisory Committee Act, 5 U.S.C. App. 2, this notice announces the reopening of the period for an invitation from the Office of the Secretary of Agriculture for nominations to the Advisory Committee on Agriculture Statistics. The April 6, 1999, **Federal Register** Notice (Volume 64, Number 65) stated that nominations must be received by May 6, 1999, for nominees to be assured of consideration. This Notice extends the date that nominations must be received to May 28, 1999.

There were several typographical errors in the April 6, 1999, **Federal Register** Notice. The following are sentences that should be corrected: Under SUMMARY, paragraph 6; change ''the first Advisory Committed on Agriculture selection process, will service a 1-year term'' to ''the first Advisory Committee on Agriculture selection process, will serve a 1-year term.'' Also, in the same paragraph change ''Chairperson of the Committed'' to ''Chairperson of the Committee.'' Under NOMINATIONS, ADDITIONAL INFORMATION, OR COMMENTS, paragraph 1, change ''e-mailed directly from the Internet side'' to ''e-mailed directly from the Internet site.''

Signed at Washington, D.C., May 7, 1999.

Donald M. Bay,

Administrator, National Agricultural Statistics Service.

[FR Doc. 99–12202 Filed 5–13–99; 8:45 am]

BILLING CODE 3410–20–P

COMMITTEE FOR PURCHASE FROM PEOPLE WHO ARE BLIND OR SEVERELY DISABLED

Procurement List; Additions

AGENCY: Committee for Purchase From People Who Are Blind or Severely Disabled.

ACTION: Additions to the procurement List.

SUMMARY: This action adds to the Procurement List commodities and a service to be furnished by nonprofit agencies employing persons who are blind or have other severe disabilities.

EFFECTIVE DATE: June 14, 1999.

ADDRESSES: Committee for Purchase From People Who Are Blind or Severely Disabled, Crystal Gateway 3, Suite 310, 1215 Jefferson Davis Highway, Arlington, Virginia 22202–4302.

FOR FURTHER INFORMATION CONTACT: Beverly Milkman (703) 603–7740.

SUPPLEMENTARY INFORMATION: On November 30, 1998, February 12 and March 5, 1999, the Committee for Purchase From People Who Are Blind or Severely Disabled published notices (63 FR 65746, 64 FR 7166 and 10620) of proposed additions to the Procurement List.

After consideration of the material presented to it concerning capability of qualified nonprofit agencies to provide the commodities and service and impact of the additions on the current or most recent contractors, the Committee has determined that the commodities and service listed below are suitable for procurement by the Federal Government under 41 U.S.C. 46–48c and 41 CFR 51–2.4.

I certify that the following action will not have a significant impact on a substantial number of small entities. The major factors considered for this certification were:

1. The action will not result in any additional reporting, recordkeeping or other compliance requirements for small entities other than the small organizations that will furnish the commodities and service to the Government.

2. The action will not have a severe economic impact on current contractors for the commodities and service.

3. The action will result in authorizing small entities to furnish the commodities and service to the Government.

4. There are no known regulatory alternatives which would accomplish the objectives of the Javits-Wagner-O'Day Act (41 U.S.C. 46–48c) in connection with the commodities and

service proposed for addition to the Procurement List.

Accordingly, the following commodities and service are hereby added to the Procurement List:

Commodities

Cushion, Seat Back
2540–00–737–3311
Cover, Folding Cot
7105–00–935–1845
Badge, Qualification
8455–01–113–0066

Service

Base Supply Center, Fort Lewis, Washington

This action does not affect current contracts awarded prior to the effective date of this addition or options that may be exercised under those contracts.

Beverly L. Milkman,

Executive Director.

[FR Doc. 99–12253 Filed 5–13–99; 8:45 am]

BILLING CODE 6353–01–P

COMMITTEE FOR PURCHASE FROM PEOPLE WHO ARE BLIND OR SEVERELY DISABLED

Procurement List; Proposed Additions

AGENCY: Committee for Purchase From People Who Are Blind or Severely Disabled.

ACTION: Proposed additions to Procurement List.

SUMMARY: The Committee has received proposals to add to the Procurement List commodities and services to be furnished by nonprofit agencies employing persons who are blind or have other severe disabilities.

COMMENTS MUST BE RECEIVED ON OR BEFORE: June 14, 1999.

ADDRESSES: Committee for Purchase From People Who Are Blind or Severely Disabled, Crystal Gateway 3, Suite 310, 1215 Jefferson Davis Highway, Arlington, Virginia 22202–4302.

FOR FURTHER INFORMATION CONTACT: Beverly Milkman (703) 603–7740.

SUPPLEMENTARY INFORMATION: This notice is published pursuant to 41 U.S.C. 47(a)(2) and 41 CFR 51–2.3. Its purpose is to provide interested persons an opportunity to submit comments on the possible impact of the proposed actions. If the Committee approves the proposed additions, all entities of the Federal Government (except as otherwise indicated) will be required to procure the commodities and services listed below from nonprofit agencies employing persons who are blind or have other severe disabilities.

I certify that the following action will not have a significant impact on a substantial number of small entities. The major factors considered for this certification were:

1. The action will not result in any additional reporting, recordkeeping or other compliance requirements for small entities other than the small organizations that will furnish the commodities and services to the Government.

2. The action will result in authorizing small entities to furnish the commodities and services to the Government.

3. There are no known regulatory alternatives which would accomplish the objectives of the Javits-Wagner-O'Day Act (41 U.S.C. 46–48c) in connection with the commodities and services proposed for addition to the Procurement List. Comments on this certification are invited.

Commenters should identify the statement(s) underlying the certification on which they are providing additional information.

The following commodities and services have been proposed for addition to Procurement List for production by the nonprofit agencies listed:

Commodities

Office Furniture
7110–00–194–1613
7110–00–281–5689
7195–00–242–3503
7110–00–151–6485
7110–00–177–4901
7110–00–177–4902
NPA: AFH Enterprises, Inc., Phoenix, Arizona
Computer Screen (CRT) Wipes
7930–01–454–1138
Phone Wipes, Sanitary
7930–01–454–1139
Hand Cleaner, Heavy Duty Wipes
8520–01–454–1144
NPA: Winston-Salem Industries for the Blind, Winston-Salem, North Carolina

Services

Janitorial/Custodial

U.S. Army Reserve Center, Lincoln, Rhode Island
NPA: Greater Providence Chapter, Rhode Island Association for Retarded Citizens, North Providence, Rhode Island

Administrative Services

Air Force Personnel Center, Randolph Air Force Base, Texas
NPA: Goodwill Industries of San Antonio, San Antonio, Texas

Beverly L. Milkman,

Executive Director.

[FR Doc. 99–12254 Filed 5–13–99; 8:45 am]

BILLING CODE 6353–01–U

COMMISSION ON CIVIL RIGHTS

Agenda and Notice of Public Meeting of the Illinois Advisory Committee

Notice is hereby given, pursuant to the provisions of the rules and regulations of the U.S. Commission on Civil Rights, that a meeting of the Illinois Advisory Committee to the Commission will convene at 9 a.m. and adjourn at 1 p.m. on Thursday, June 3, 1999, at the Crowne Plaza Hotel, Ten South Wabash, Chicago, Illinois 60603. The purpose of the meeting is to hold a press conference to release the Committees's reports, (1) Police Protection of the African American Community in Chicago: An Update, and (2) Civil Rights Issues Facing the Blind and Visually Impaired in Illinois. Also, the Committee will discuss current events and plan future activities.

Persons desiring additional information, or planning a presentation to the Committee, should contact Committee Chairperson Joseph Mathewson, 312–360–1110, or Constance M. Davis, Director of the Midwestern Regional Office, 312–353–8311 (TDD 312–353–8362). Hearing-impaired persons who will attend the meeting and require the services of a sign language interpreter should contact the Regional Office at least ten (10) working days before the scheduled date of the meeting.

The meeting will be conducted pursuant to the provisions of the rules and regulations of the Commission.

Dated at Washington, DC, May 4, 1999.

Carol-Lee Hurley,

Chief, Regional Programs Coordination Unit.

[FR Doc. 99–12182 Filed 5–13–99; 8:45 am]

BILLING CODE 6335–01–P

DEPARTMENT OF COMMERCE

Bureau of the Census

Service Annual Survey

ACTION: Proposed collection; comment request.

SUMMARY: The Department of Commerce, as part of its continuing effort to reduce paperwork and respondent burden, invites the general public and other Federal agencies to take this opportunity to comment on proposed and/or continuing information collections, as required by the Paperwork Reduction Act of 1995, Pub. L. 104–13 (44 U.S.C. 3506(c)(2)(A)).

DATES: Written comments must be submitted on or before July 13, 1999.

ADDRESSES: Direct all written comments to Linda Engelmeier, Departmental Forms Clearance Officer, Department of Commerce, Room 5033, 14th and Constitution Avenue, NW, Washington, DC 20230.

FOR FURTHER INFORMATION CONTACT: Requests for additional information or copies of the information collection instrument(s) and instructions should be directed to Ruth Bramblett, Bureau of the Census, Room 2775–FOB 3, Washington, DC 20233–6500, (301) 457–2766.

SUPPLEMENTARY INFORMATION:

I. Abstract

The services annual program consists of three separate surveys: the Service Annual Survey (SAS), OMB No. 0607–0422; the Transportation Annual Survey (TAS), OMB No. 0607–0798; and the Annual Survey of Communication Services (ASCS), OMB No. 0607–0706.

SAS provides, for selected personal, business, entertainment, health, social and other professional industries, total receipt estimates for taxable firms and total revenue and expense estimates for tax-exempt firms. TAS and ASCS provide total revenue and total expense estimates for trucking and warehousing; and telephone, broadcasting, cable television and other communication services, respectively. These data are needed to provide a sound statistical basis for the formation of policy by various governmental agencies. The Census Bureau is authorized to conduct surveys necessary to furnish current data on subjects covered by the major censuses authorized by Title 13, United States Code. These surveys provide continuing and timely national statistical data for the period between economic censuses.

The Bureau of Economic Analysis (BEA), the primary Federal user of our annual program statistics, uses the information in developing the national income and product accounts, compiling benchmark and annual input-output tables, and computing gross domestic product (GDP) by industry. Agencies of the U.S. Department of Transportation (DOT) use the data for policy development and program management and evaluation. The Bureau of Labor Statistics (BLS) uses the data as inputs to its Producer Price Indexes and in developing productivity measurements. The Health Care Financing Administration (HCFA) uses the data for the development for the National Health Expenditure Accounts. The Federal Communication Commission (FCC) uses the data as a means for assessing FCC policy. The Census Bureau uses the data to provide new insight into changing structural and cost conditions that will impact the planning and design of future economic census questionnaires. Private industry also uses the data as a tool for marketing analysis.

Data are collected from all of the largest firms and from a sample of small- and medium-sized businesses selected using a stratified sampling procedure. The samples are reselected periodically, generally at 5-year intervals. The largest firms continue to be canvassed when the sample is re-drawn, while nearly all of the small- and medium-sized firms from the prior sample are replaced. We collect these data by using a mail-out/mail-back survey questionnaire.

The services annual program currently publishes estimates on a Standard Industrial Classification (SIC) basis. Beginning with survey year 1999, we will publish using the North American Industry Classification System (NAICS). The structure of NAICS was developed in a series of meetings among the United States, Canada, and Mexico in the early to mid-1990's. Due to the rapid changes in both the U.S. and the world economies, NAICS was constructed on a production-oriented, or supply based, conceptual framework. The system provides an updated way to classify new and emerging industries.

Due to the many changes caused by NAICS, the vehicles for which we will collect this information will change. The three separate surveys will be replaced with sectoral coverage under the SAS. This revision to SAS will incorporate the TAS and ASCS surveys, and increase industry coverage. Whereas before, a single report was produced for each of the three surveys, now this program will produce multiple data products.

Our goal in NAICS is to maximize industry coverage with our available resources. The SAS will provide dollar volume estimates for specific industries in the following NAICS sectors:

- Transportation and Warehousing (48–49).
- Information (51).
- Finance and Insurance (52).
- Real Estate and Rental and Leasing (53).
- Professional, Scientific, and Technical Services (54).
- Administrative and Support, Waste Management and Remediation Services (56).
- Educational Services (61).
- Health Care and Social Assistance (62).
- Arts, Entertainment and Recreation (71).
- Other Services (81).

Changes From an SIC to a NAICS Basis

Conversion from the SIC to a NAICS basis will dramatically affect the data collection program. The most significant changes are:

- There will be an additional 149 new and emerging industries added to the SAS, including Air Couriers, Publishing, Sound Recording, Waste Management and Remediation Services, and selected Financial Services.
- An Information sector is created. It brings together industries that produce, manipulate and distribute information and cultural products; those that provide the means to transmit or distribute these products; and those that process data or communications. Included in this sector are telecommunications and broadcasting; motion pictures and sound recording; information and data processing services; and publishers, including newspaper, book, and periodical publishing previously covered in our Manufacturing program.
- Hotels, Motels, Lodging and Boarding Houses will now be a part of the Accommodations and Food Services sector (72), and surveyed along with the Retail Sector in other programs.
- Non-employers will be included for all sectors.
- Use of administrative receipts data in lieu of surveying small single establishment employer businesses and for all nonemployers.
- With the implementation of NAICS, we are expanding the number of form types. We have developed these forms to be more tailored to the industries surveyed. The report numbering system will change as follows as a result of this migration:

Old	New	Description
B–514, B–515	SA–484	Transportation and Warehousing.
B–514, B–515	SA–492	Couriers and Messengers.
B–524, B–525	SA–493	Warehousing and Storage.
MA–1000(L)	SA–511	Newspaper Publishers.

Old	New	Description
MA–1000(L)	SA–511	Periodical Publishers.
MA–1000(L)	SA–511	Book Publishers.
MA–1000(L)	SA–511	Database and Directory Publishers.
MA–1000(L)	SA–511	Greeting Cards.
MA–1000(L)	SA–511	All Other Publishers.
B–500T3	SA–511	Software Publishers.
B–500T	SA–512	Motion Picture and Sound Recording Industries.
B–518, B–519	SA–513	Radio and Television Broadcasting.
B–520, B–521	SA–513	Cable Distribution and Program Distribution.
B–516, B–517	SA–513	Telecommunications.
B–500T3	SA–514	Information Services.
B–500M	SA–514	Libraries and Archives.
B–500T3	SA–514	On-Line Information Services.
N/A	SA–523	Securities, Commodity Contracts, and Other Financial Investments and Related Activities.
N/A	SA–524	Insurance Carriers and Related Activities.
B–500T	SA–532	Rental and Leasing Services.
B–500M	SA–541	Professional, Scientific, and Technical Services.
B–500T3	SA–541	Computer Systems Design and Related Services.
B–500T, B–500M	SA–560	Administrative and Support Waste Management and Remediation Services.
B–500M	SA–610	Educational Services.
B–500M3	SA–621	Offices of Physicians.
B–500M3	SA–621	Offices of Dentists.
B–500M3	SA–621	Offices of Chiropractors.
B–500M3	SA–621	Offices of Optometrists.
B–500M3	SA–621	Offices of Mental Health Practitioners.
B–500M3	SA–621	Offices of Physical, Occupational and Speech Therapists and Audiologists.
B–500M3	SA–621	Offices of Health Practitioners.
B–500M	SA–621	Outpatient Care Centers.
B–500T	SA–621	Medical Laboratories.
B–500M	SA–621	Home Health Care Services.
B–500M	SA–621	Other Ambulatory Health Care Services.
B–500M	SA–622	Hospitals.
B–500M1	SA–623	Nursing and Residential Care Facilities.
B–500M	SA–624	Social Assistance.
B–500M, B–500T	SA–711	Performing Arts and Related Industries.
B–500T	SA–712	Spectator Sports.
B–500T	SA–713	Amusement, Gambling, and Recreation Industries.
B–500T	SA–811	Repair and Maintenance.
B–500T	SA–812	Personal and Laundry Services.
B–500M	SA–813	Religious, Grantmaking, Civic, Professional, and Similar Organizations.

Through our established base of contacts, we will informally contact firms by telephone to ensure that the data being requested are available from existing company records or can be easily estimated, that reporting instructions are clear and helpful, and that terminology used on the questionnaires conforms to industry usage. Through these informal consultations, we will also be able to establish an estimate of the number of hours necessary for a company to complete the survey.

II. Method of Collection

We collect this information by mail, fax, and telephone follow-up.

III. Data

OMB Number: This revision to the Service Annual Survey (OMB No. 0607–0422) will now include Transportation Annual Survey (OMB No. 0607–0798) and Annual Survey of Communications (OMB No. 0607–0706).

Form Number: Refer to Abstract.

Type of Review: Regular Submission.

Affected Public: Businesses or other for-profit organizations, not-for-profit institutions, Government hospitals and Federal Government.

Estimated Number of Respondents: 50,000 under NAICS.

Estimated Time Per Response: On average, we expect 1 hour and 12 minutes as an estimate.

Estimated Total Annual Burden Hours: 60,000 hours under NAICS.

Estimated Total Annual Cost: The cost to the respondents for fiscal year 2000 is estimated to be $1,059,600 based on the median hourly salary of $17.66 for accountants and auditors. (Occupational Employment Statistics-Bureau of Labor Statistics ''1997 National Occupational Employment and Wage Estimates'') http://stats.bls.gov/oes/national/oes__prof.htm.

Respondent's Obligation: Mandatory.

Legal Authority: Title 13, United States Code; Sections 182, 224, and 225.

IV. Request for Comments

Comments are invited on: (a) Whether the proposed collection of information is necessary for the proper performance of the functions of the agency, including whether the information shall have practical utility; (b) the accuracy of the agency's estimate of the burden (including hours and cost) of the proposed collection of information; (c) ways to enhance the quality, utility, and clarity of the information to be collected; and (d) ways to minimize the burden of the collection of information on respondents, including through the use of automated collection techniques or other forms of information technology.

Comments submitted in response to this notice will be summarized and/or included in the request for OMB approval of this information collection; they also will become a matter of public record.

Dated: May 7, 1999.

Linda Engelmeier,

Departmental Forms Clearance Officer, Office of the Chief Information Officer.

[FR Doc. 99–12195 Filed 5–13–99; 8:45 am]

BILLING CODE 3510–07–P

DEPARTMENT OF COMMERCE

International Trade Administration

[C–533–063]

Certain Iron-Metal Castings From India: Amended Final Results of Countervailing Duty Administrative Review Pursuant to Settlement

AGENCY: Import Administration, International Trade Administration, Department of Commerce.

ACTION: Notice of amendment to final results of countervailing duty administrative review.

SUMMARY: On October 21, 1991, the Department of Commerce (''the Department'') published in the **Federal Register** its final results of administrative review of the countervailing duty order on certain iron-metal castings from India for the period 1988 (56 FR 52515). Pursuant to a settlement agreement, the Department has recalculated the countervailing duty rates. The final countervailing duty rates for this review period are listed below in the *Final Results of Review* section of this notice.

EFFECTIVE DATE: May 14, 1999.

FOR FURTHER INFORMATION CONTACT: Robert Copyak, Office of AD/CVD Enforcement VI, Import Administration, International Trade Administration, U.S. Department of Commerce, 14th Street and Constitution Avenue, N.W. Washington, D.C. 20230; telephone: (202) 482–2786.

SUPPLEMENTARY INFORMATION: On October 21, 1991, the Department published the final results of its administrative review of the countervailing duty order on certain iron-metal castings from India for the period January 1, 1988 through December 31, 1988. *See Final Results of Countervailing Duty Administrative Review: Certain Iron-Metal Castings from India,* 56 FR 52515. Subsequently, respondents challenged the final results before the Court of International Trade (CIT). The primary complaint of their challenge involved the calculation of the program rates for the subsidies provided under India's International Price Reimbursement Scheme (IPRS). The IPRS is a program through which the Government of India (GOI) provided rebates to castings exporters that purchased domestically-produced pig iron at prices set by the GOI. According to the GOI, the amounts of these rebates were calculated to equal the differences between the higher domestic prices actually paid and lower alternative prices available from sources outside of India.

As the IPRS was also the subject of litigation for the review period 1985 in *Creswell* v. *United States,* Consolidated Court No. 91–01–00012 (*Creswell*), litigation for the review period 1988 was stayed pending finalization of *Creswell.* After the CIT affirmed the Department's remand determination for the 1985 administrative review (*see Creswell,* Slip Op. 98–139 (CIT Sept. 29, 1998)), the Department published a notice of amended final results in accordance with that opinion. *See Certain Iron-metal Castings from India: Amended Final Results of Countervailing Duty Administrative Review In Accordance With Decision Upon Remand* (63 FR 67858, December 9, 1998.) In lieu of pursuing further litigation with respect to the administrative review of the review period 1988, the parties have entered into a settlement agreement. The parties agreed to countervailing duty rates that were calculated based on the methodology approved by the CIT in *Creswell.* On April 1, 1999, the CIT approved the settlement agreement and dismissed the lawsuit. *See Uma Iron & Steel Co.* v. *United States,* Slip. Op. 99–30, Consol. Ct. No., 91–11–00825 (CIT Apr. 1, 1999).

Final Results of Review

Pursuant to the settlement agreement, we recalculated the company-specific and all-other subsidy rates for the period January 1, 1988, through December 31, 1988. The amended final countervailing duty rates are:

Manufacturer/exporter	Revised rates (percent)
Uma Iron & Steel Co.	10.03
Govind Steel	14.08
All Others	4.10

The Department will instruct the U.S. Customs Service (Customs) to assess countervailing duties on all appropriate entries. The Department will issue liquidation instructions directly to Customs. The above rates will not affect the cash deposit requirements currently in effect, which will continue to be based on the rates found to exist in the most recently completed review.

This amendment to the final results of countervailing duty administrative review notice is in accordance with section 751(a)(1) of the Tariff Act, as amended, (19 U.S.C. 1675(a)(1), 19 CFR 351.213, and 19 CFR 351.221(b)(5)).

Date: May 5, 1999.

Robert S. LaRussa,

Assistant Secretary for Import Administration.

[FR Doc. 99–12279 Filed 5–13–99; 8:45 am]

BILLING CODE 3510–DS–P

DEPARTMENT OF COMMERCE

International Trade Administration

[C–533–063]

Certain Iron-Metal Castings From India: Amended Final Results of Countervailing Duty Administrative Review Pursuant to Settlement

AGENCY: Import Administration, International Trade Administration, Department of Commerce.

ACTION: Notice of amendment to final results of countervailing duty administrative review.

SUMMARY: On October 21, 1991, the Department of Commerce (''the Department'') published in the **Federal Register** its final results of administrative review of the countervailing duty order on certain iron-metal castings from India for the period 1989 (56 FR 52521). Pursuant to a settlement agreement, the Department has recalculated the countervailing duty rates. The final countervailing duty rates for this review period are listed below in the *Final Results of Review* section of this notice.

EFFECTIVE DATE: May 14, 1999.

FOR FURTHER INFORMATION CONTACT: Robert Copyak, Office of AD/CVD Enforcement VI, Import Administration, International Trade Administration, U.S. Department of Commerce, 14th Street and Constitution Avenue, NW Washington, DC 20230; telephone: (202) 482–2786.

SUPPLEMENTARY INFORMATION: On October 21, 1991, the Department published the final results of its administrative review of the countervailing duty order on certain iron-metal castings from India for the period January 1, 1989 through December 31, 1989. *See Final Results of Countervailing Duty Administrative Review: Certain Iron-Metal Castings from India,* 56 FR 52521. Subsequently, respondents challenged the final results before the Court of International Trade (CIT). The primary complaint of their challenge involved the calculation of the program rates for the subsidies provided under India's International Price Reimbursement Scheme (IPRS). The IPRS is a program through which the Government of India (GOI) provided

rebates to castings exporters that purchased domestically-produced pig iron at prices set by the GOI. According to the GOI, the amounts of these rebates were calculated to equal the differences between the higher domestic prices actually paid and lower alternative prices available from sources outside of India.

As the IPRS was also the subject of litigation for the review period 1985 in *Creswell* v. *United States,* Consolidated Court No. 91–01–00012 (*Creswell*), litigation for the review period 1989 was stayed pending finalization of *Creswell.* After the CIT affirmed the Department's remand determination for the 1985 administrative review (*see Creswell,* slip op. 98–139 (CIT Sept. 29, 1998)), the Department published a notice of amended final results in accordance with that opinion. *See Certain Iron-metal Castings from India: Amended Final Results of Countervailing Duty Administrative Review In Accordance With Decision Upon Remand* (63 FR 67858, December 9, 1998.) In lieu of pursuing further litigation with respect to the administrative review of the review period 1989, the parties have entered into a settlement agreement. The parties agreed to countervailing duty rates that were calculated based on the methodology approved by the CIT in *Creswell.* On April 1, 1999, the CIT approved the settlement agreement and dismissed the lawsuit. *See Carnation Enterprises P. Ltd., Et. Al.,* v. *United States,* Slip Op. 99–31, Consol. Ct. No., 91–11–00826 (CIT Apr. 1, 1999).

Final Results of Review

Pursuant to the settlement agreement, we recalculated the company-specific and all-other subsidy rates for the period January 1, 1989, through December 31, 1989. The amended final countervailing duty rates are:

Manufacturer/exporter	Revised rates (percent)
Carnation Enterprises Pvt. Ltd.	16.10
Uma Iron & Steel Co.	16.22
Govind Steel	20.36
Tirupati	20.36
Ragunath Prasad Phoolchand	20.36
All Others	2.50

The Department will instruct the U.S. Customs Service (Customs) to assess countervailing duties on all appropriate entries. The Department will issue liquidation instructions directly to Customs. The above rates will not affect the cash deposit requirements currently in effect, which will continue to be based on the rates found to exist in the most recently completed review.

This amendment to the final results of countervailing duty administrative review notice is in accordance with section 751(a)(1) of the Tariff Act, as amended, (19 U.S.C. 1675(a)(1), 19 CFR 351.213, and 19 CFR 351.221(b)(5)).

Dated: May 5, 1999.

Robert S. LaRussa,

Assistant Secretary for Import Administration.

[FR Doc. 99–12280 Filed 5–13–99; 8:45 am]

BILLING CODE 3510–DS–P

DEPARTMENT OF COMMERCE

International Trade Administration

United States-Canada Free-Trade Agreement, Article 1904 Binational Panel Reviews; Notice of Decision of Panel

AGENCY: NAFTA Secretariat, United States Section, International Trade Administration, Department of Commerce.

ACTION: Notice of decision of Panel.

SUMMARY: On May 3, 1999 the binational panel issued its decision in the review of the final results of the ninth antidumping duty administrative review made by the International Trade Administration (ITA) respecting Porcelain-on-Steel Cookware from Mexico (Secretariat File No. USA–97–1904–07) affirmed the determination of the Department of Commerce in all respects, except that, it remanded to the Department the use of the global ratio in calculating Yamaka's indirect selling expenses. The Department will return the determination on remand no later than June 4, 1999. A copy of the complete panel decision is available from the NAFTA Secretariat.

FOR FURTHER INFORMATION CONTACT: Caratina L. Alston, Acting United States Secretary, NAFTA Secretariat, Suite 2061, 14th and Constitution Avenue, Washington, D.C. 20230, (202) 482–5438.

SUPPLEMENTARY INFORMATION: Chapter 19 of the United States-Canada Free-Trade Agreement (''Agreement'') establishes a mechanism to replace domestic judicial review of final determinations in antidumping and countervailing duty cases involving imports from the other country with review by independent binational panels. When a Request for Panel Review is filed, a panel is established to act in place of national courts to review expeditiously the final determination to determine whether it conforms with the antidumping or countervailing duty law of the country that made the determination.

Under Article 1904 of the Agreement, which came into force on January 1, 1989, the Government of the United States and the Government of Canada established *Rules of Procedure for Article 1904 Binational Panel Reviews* (''Rules''). The Rules were published in the **Federal Register** on December 30, 1988 (53 FR 53212). The Rules were amended by Amendments to the Rules of Procedure for Article 1904 Binational Panel Reviews, published in the **Federal Register** on December 27, 1989 (54 FR 53165). A consolidated version of the amended Rules was published in the **Federal Register** on June 15, 1992 (57 FR 26698). The Rules were further amended and published in the **Federal Register** on February 8, 1994 (59 FR 5892). The panel review in this matter was conducted in accordance with the Rules, as amended.

Panel Decision

On May 4, 1999, the Binational Panel affirmed the Department of Commerce in all respects, except that, it remanded to the Department the use of the global ratio in calculating Yamaka's indirect selling expenses to determine whether its calculation was in fact a clerical error and, if so, to correct the error and explain the basis for the correction in detail, specifically addressing comments on the proper calculation.

The Department will return the determination on remand no later than June 4, 1999.

Dated: May 7, 1999.

Caratina L. Alston,

Acting United States Secretary, NAFTA Secretariat

[FR Doc. 99–12256 Filed 5–13–99; 8:45 am]

BILLING CODE 3510–GT–P

DEPARTMENT OF COMMERCE

International Trade Administration

North American Free Trade Agreement (NAFTA), Article 1904 Binational Panel Reviews: Notice of Termination of Panel Review

AGENCY: North American Free Trade Agreement, NAFTA Secretariat, United States Section, International Trade Administration, Department of Commerce.

ACTION: Notice of termination of panel review of the final countervailing duty determination made by the International Trade Administration, respecting steel wire rod from Canada. (Secretariat File No. USA–97–1904–08).

SUMMARY: Pursuant to the Consent Motion to Terminate the Panel Review, the panel review is terminated as of May 6, 1999. Complaints were filed pursuant to Rule 39, Notices of Appearance were filed pursuant to Rule 40, however no panel has been appointed. Pursuant to Rule 73(2) of the *Rules of Procedure for Article 1904 Binational Panel Review*, this panel review is terminated.

FOR FURTHER INFORMATION CONTACT: Caratina L. Alston, Acting United States Secretary, NAFTA Secretariat, Suite 2061, 14th and Constitution Avenue, Washington, D.C. 20230, (202) 482–5438.

SUPPLEMENTARY INFORMATION: Chapter 19 of the North American Free-Trade Agreement (''Agreement'') establishes a mechanism to replace domestic judicial review of final determinations in antidumping and countervailing duty cases involving imports from a NAFTA country with review by independent binational panel. When a request for Panel Review is filed, a panel is established to act in place of national courts to review expeditiously the final determination to determine whether it conforms with the antidumping or countervailing duty law of the country that made the determination.

Under Article 1904 of the Agreement, which came into force on January 1, 1994, the Government of the United States, the Government of Canada and the Government of Mexico established *Rules of Procedure for Article 1904 Binational Panel Reviews* (''Rules''). These Rules were published in the **Federal Register** on February 23, 1994 (59 FR 8686). The panel review in this matter was requested and terminated pursuant to these Rules.

Dated: May 7, 1999.

Caratina L. Alston,

Acting United States Secretary, FTA Binational Secretariat.

[FR Doc. 99–12257 Filed 5–13–99; 8:45 am]

BILLING CODE 3510–GT–P

DEPARTMENT OF COMMERCE

National Telecommunications and Information Administration

[Docket No. 980212036–9125–05]

Enhancement of the .us Domain Space, Notification of Open Electronic Mailing List for Public Discussions Regarding the Future Management and Administration of the .us Domain Space

AGENCY: National Telecommunications and Information Administration, Department of Commerce.

ACTION: Notice.

SUMMARY: Notification is hereby given that the National Telecommunications and Information Administration (NTIA) has established an open electronic mailing list for public discussions regarding the future management and administration of the .us domain space. Participation in the mailing list is open to all members of the public interested in discussing the issue.

DATES: The mailing list[1] will remain open until August 12, 1999.

ADDRESSES: To subscribe to the mailing list, send an electronic mail to *us-list-request@ntiant1.ntia.doc.gov* and in the body of the message type: join us-list.

FOR FURTHER INFORMATION CONTACT: Karen Rose, NTIA/OIA, (202) 482–1866. For technical inquires, contact *webmaster@ntia.doc.gov*.

SUPPLEMENTARY INFORMATION: On August 4, 1998, NTIA published ''Request for Comments on the Enhancement of the .us Domain Space,'' 63 FR 41547 (1988) (also posted at http://www.ntia.doc.gov/ntiahome/domainname/usrfc/dotusrfc.htm). The RFC sought comments regarding the future administration and management of the .us domain space. That comment period was extended on August 24 to afford interested parties a full opportunity to address the issues on which NTIA solicited public comment. See 63 FR 45800 (1998).

On March 9, 1999, NTIA hosted a public meeting regarding the future management and administration of the .us domain. See 64 FR 6633 (1999). Approximately 60 participants attended the meeting, including the current .us administrator, current .us registrars, educators, representatives of the technical, public interest and business communities, state government officials, officials from Federal Government and representatives of foreign governments. The discussions focused on four main topics: (1) the current administration of the .us domain space, (2) issues and opportunities facing the current and future management of .us, (3) possible models for future .us management, and (4) possible next steps for going forward. See http://www.ntia.doc.gov/ntiahome/domainname/dotusagenda.htm. The meeting resulted in a thoughtful and constructive exchange of ideas about range of issues regarding current and future .us management. Meeting participants were strongly in favor of engaging in further discussions and requested that NTIA establish an electronic mailing list to help facilitate the interchange. This notice announces that NTIA has set up the electronic mailing list.

In an effort to afford the public an open forum in which to freely discuss the broad range of issues regarding the .us domain space, NTIA will not actively moderate the mailing list, but staff will follow the discussions. NTIA requests, however, that participants keep discussions focused on issues related to the future management and administration of the .us domain space. Digest archives of mailing list discussions may be posted periodically on the NTIA web site at http://www.ntia.doc.gov/ntiahome/domainname/domainhome.htm. The views expressed in the mailing list are not necessarily endorsed by the Department of Commerce or NTIA. Moreover, the Department of Commerce and NTIA reserve the right not to post comments that the Department of Commerce or NTIA deems inappropriate.

Kathy Smith,

Acting Chief Counsel.

[FR Doc. 99–12229 Filed 5–13–99; 8:45 am]

BILLING CODE 3510–60–P

[1] Routine maintenance of NTIA computer systems may render the list inactive for short periods of time.

COMMODITY FUTURES TRADING COMMISSION

Applications of the Chicago Mercantile Exchange for Designation as a Contract Market in Futures and Options on Three Month Eurodallar FRAs

AGENCY: Commodity Futures Trading Commission.

ACTION: Notice of availability of amended terms and conditions of proposed commodity futures and option contracts.

SUMMARY: The Chicago Mercantile Exchange (CME or Exchange) has applied for designation as a contract market in futures and options on three-month Eurodallar FRAs (forward rate agreements). Following Commission receipt of the applications in July 1998, the Director of the Division of Economic Analysis (Division) of the Commission, acting pursuant to the authority delegated by Commission Regulation 140.96, published those proposals for public comment (63 FR 42617). That comment period ended on September 9, 1998. In a supplemental submission dated October 2, 1998, the CME proposed to amend the original application to provide that positions in the proposed three-month Eurodallar FRA futures contract would not be

offset. The Commission has determined that an additional period for public comment on the proposals will assist the Commission in considering the views of interested persons, and is consistent with the purposes of the Commodity Exchange Act.

DATES: Comments must be received on or before June 14, 1999.

ADDRESSES: Interested persons should submit their views and comments to Jean A. Webb, Secretary, Commodity Futures Trading Commission, Three Lafayette Center, 1155 21st Street, NW, Washington, DC 20581. In addition, comments may be sent by facsimile transmission to facsimile number (202) 418–5521, or by electronic mail to secretary@cftc.gov. Reference should be made to the CME three-month Eurodallar FRA futures and option contracts.

FOR FURTHER INFORMATION CONTACT: Please contact David Van Wagner of the Division of Trading and Markets, telephone (202) 418–5481. Facsimile number (202) 418–5547. Electronic Mail: dvanwagner@aftc.gov. With respect to the individual contract terms and conditions, please contact Michael Penick of the Division of Economic Analysis, Commodity Futures Trading Commission, Three Lafayette Center, 1155 21st Street NW, Washington, DC 20581, telephone (202) 418–5279. Facsimile number: (202) 418–5527. Electronic mail: mpenick@cftc.gov.

SUPPLEMENTARY INFORMATION: In the original application, the terms and conditions of the proposed futures contract provided that the contract would be cash settled using procedures substantially identical to those of the existing CME Eurodollar futures contract. Other features of the proposed contract were also comparable to those approved for existing markets.

In a supplemental filing, the CME has clarified which exchange procedures specifically would apply to the trading, clearing and settlement of the proposed three-month Eurodollar FRA futures contract. As proposed, CME Rule ____.00, Scope of Chapter, would be modified to state that the procedures for trading, clearing and settlement of the three-month Eurodollar FRA futures are governed by the rules of the Exchange except for Rule 806.[1] Procedures requiring the posting of collateral to cover daily pays and collects would remain the same.

Under the proposed revision, positions in the proposed three-month Eurodallar FRA futures contract would not be liquidated by offset. Rather, positions must be held to contract expiration once opened. As the CME explained in its supplemental filing:

> . . . the value of a price change in the Eurodollar FRA futures contract is not known until the final settlement date when the value of a tick is determined. Therefore, the Clearinghouse cannot determine accurately the pays and collects on Eurodollar FRA futures positions until the final settlement. . . Hence, as the Eurodollar FRA futures rules already reflect, the Eurodollar FRA futures contract is not subject to Rule 814 regarding daily pays and collects between the contract holder and the Clearinghouse. Similarly, because the Eurodollar FRA futures contract is not settled daily and because pays and collects do not occur daily as the Eurodollar futures contracts, the Clearinghouse cannot offset Eurodollar FRA futures contracts. Rather, pays and collects will be netted out across the settling Eurodollar FRA contracts on the settlement date.[2]

The Commission is requesting comment on the proposed contract provisions with respect to exchange financial integrity, futures industry practices, and the application of any provisions of the Commodity Exchange Act or of any specific Commission policy or interpretation.

Copies of the amended terms and conditions will be available for inspection at the Office of the Secretariat, Commodity Futures Trading Commission, Three Lafayette Center, 1155 21st Street NW, Washington, DC 20581. Copies of the terms and conditions can be obtained through the Office of the Secretariat by mail at the above address or by phone at (202) 418–5100.

Other materials submitted by the CME in support of the applications for contract market designation may be available upon request pursuant to the Freedom of Information Act (5 U.S.C. 552) and the Commission's regulations thereunder (17 CFR Part 145 (1997)), except to the extent they are entitled to confidential treatment as set forth in 17 CFR 145.5 ad 145.9. Requests for copies of such materials should be made to the FOI, Privacy and Sunshine Act Compliance Staff of the Office of Secretariat at the Commission's headquarters in accordance with 17 CFR 145.7 and 145.8.

Any person interested in submitting written data, views, or arguments on the proposed terms and conditions, or with respect to other materials submitted by the CME should send such comments to Jean A. Webb, Secretary, Commodity Futures Trading Commission, Three Lafayette Central, 1155 21st Street NW, Washington, DC 20581 by the specified date.

Issued in Washington, DC, on May 5, 1999.

Jean A. Webb,

Secretary of the Commission.

[FR Doc. 99–11785 Filed 5–12–99; 9:17 am]

BILLING CODE 6351–01M–M

[1] CME Rule 806 states that ''a clearing member long or short any commodity to the Clearing House as a result of substitution may liquidate the position by acquiring an opposite position for its principal.''

[2] As mentioned, the Clearinghouse would require the posting of collateral to cover pays and collects on the final settlement date.

DEPARTMENT OF DEFENSE

GENERAL SERVICES ADMINISTRATION

NATIONAL AERONAUTICS AND SPACE ADMINISTRATION

[OMB Control No. 9000–0080]

Proposed Collection; Comment Request Entitled Integrity of Unit Prices

AGENCIES: Department of Defense (DOD), General Services Administration (GSA), and National Aeronautics and Space Administration (NASA).

ACTION: Notice of request for public comments regarding an extension to an existing OMB clearance (9000–0080).

SUMMARY: Under the provisions of the Paperwork Reduction Act of 1995 (44 U.S.C. Chapter 35), the Federal Acquisition Regulation (FAR) Secretariat will be submitting to the Office of Management and Budget (OMB) a request to review and approve an extension of a currently approved information collection requirement concerning Integrity of Unit Prices. This OMB clearance currently expires on August 31, 1999.

DATES: Comments may be submitted on or before July 13, 1999.

ADDRESSES: Comments regarding this burden estimate or any other aspect of this collection of information, including suggestions for reducing this burden, should be submitted to: FAR Desk Officer, OMB, Room 10102, NEOB, Washington, DC 20503, and a copy to the General Services Administration, FAR Secretariat (MVRS), 1800 F Street, NW, Room 4035, Washington, DC 20405.

FOR FURTHER INFORMATION CONTACT: Jeremy F. Olson, Federal Acquisition Policy Division, GSA (202) 501–3221.

SUPPLEMENTARY INFORMATION:

A. Purpose

FAR 15.408(f) and the clause at FAR 52.215–14, Integrity of Unit Prices, require offerors and contractors under Federal contracts that are to be awarded

without adequate price competition to identify in their proposals those supplies which they will not manufacture or to which they will not contribute significant value. The policies included in the FAR are required by section 501 of Public Law 98–577 (for the civilian agencies) and section 927 of Public Law 99–500 (for DOD and NASA). The rule contains no reporting requirements on contracts with commercial items.

B. Annual Reporting Burden

Public reporting burden for this collection of information is estimated to average 1 hour per response including the time for reviewing instructions, searching existing data sources, gathering and maintaining the data needed, and completing and reviewing the collection of information.

The annual reporting burden is estimated as follows: Respondents, *1,000*; responses per respondent, *10*; total annual responses, *10,000*; preparation hours per response, *1* hour; and total response burden hours, *10,000*.

Obtaining Copies of Proposals

Requester may obtain a copy of the justification from the General Services Administration, FAR Secretariat (MVRS), Room 4035, 1800 F Street, NW, Washington, DC 20405, telephone (202) 208–7312. Please cite OMB Control No. 9000–0080, Integrity of Unit Prices, in all correspondence.

Dated: May 10, 1999.

Edward C. Loeb,

Director, Federal Acquisition Policy Division.

[FR Doc. 99–12150 Filed 5–13–99; 8:45 am]

BILLING CODE 6820–34–P

DEPARTMENT OF DEFENSE

GENERAL SERVICES ADMINISTRATION

NATIONAL AERONAUTICS AND SPACE ADMINISTRATION

[OMB Control No. 9000–0082]

Proposed Collection; Comment Request Entitled Economic Purchase Quantities—Supplies

AGENCIES: Department of Defense (DOD), General Services Administration (GSA), and National Aeronautics and Space Administration (NASA).

ACTION: Notice of request for public comments regarding an extension to an existing OMB clearance (9000–0082).

SUMMARY: Under the provisions of the Paperwork Reduction Act of 1995 (44 U.S.C. Chapter 35), the Federal Acquisition Regulation (FAR) Secretariat will be submitting to the Office of Management and Budget (OMB) a request to review and approve an extension of a currently approved information collection requirement concerning Economic Purchase Quantities—Supplies. This OMB clearance currently expires on August 31, 1999.

DATES: Comments may be submitted on or before July 13, 1999.

ADDRESSES: Comments regarding this burden estimate or any other aspect of this collection of information, including suggestions for reducing this burden, should be submitted to: FAR Desk Officer, OMB, Room 10102, NEOB, Washington, DC 20503, and a copy to the General Services Administration, FAR Secretariat (MVRS), 1800 F Street, NW, Room 4035, Washington, DC 20405.

FOR FURTHER INFORMATION CONTACT: Jeremy F. Olson, Federal Acquisition Policy Division, GSA (202) 501–3221.

SUPPLEMENTARY INFORMATION:

A. Purpose

The provision at 52.207–4, Economic Purchase Quantities—Supplies, invites offerors to state an opinion on whether the quantity of supplies on which bids, proposals, or quotes are requested in solicitations is economically advantageous to the Government. Each offeror who believes that acquisitions in different quantities would be more advantageous is invited to (1) recommend an economic purchase quantity, showing a recommended unit and total price, and (2) identify the different quantity points where significant price breaks occur. This information is required by Pub. L. 98–577 and Pub. L. 98–525.

B. Annual Reporting Burden

Public reporting burden for this collection of information is estimated to average *50* minutes per response, including the time for reviewing instructions, searching existing data sources, gathering and maintaining the data needed, and completing and reviewing the collection of information.

The annual reporting burden is estimated as follows: Respondents, *1,524*; responses per respondent, *25*; total annual responses, *38,100*; preparation hours per response, *.83*; and total response burden hours, *31,623*.

Obtaining Copies of Proposals

Requester may obtain a copy of the justification from the General Services Administration, FAR Secretariat (MVRS), Room 4035, 1800 F Street, NW, Washington, DC 20405, telephone (202) 208–7312. Please cite OMB Control No. 9000–0082, Economic Purchase Quantities-Supplies, in all correspondence.

Dated: May 10, 1999.

Edward C. Loeb,

Director, Federal Acquisition Policy Division.

[FR Doc. 99–12151 Filed 5–13–99; 8:45 am]

BILLING CODE 6820–34–P 3

DEPARTMENT OF DEFENSE

GENERAL SERVICES ADMINISTRATION

NATIONAL AERONAUTICS AND SPACE ADMINISTRATION

[OMB Control No. 9000–0144]

Proposed Collection; Comment Request Entitled Payment by Electronic Fund Transfer

AGENCIES: Department of Defense (DOD), General Services Administration (GSA), and National Aeronautics and Space Administration (NASA).

ACTION: Notice of request for public comments regarding an extension to an existing OMB clearance (9000–0144).

SUMMARY: Under the provisions of the Paperwork Reduction Act of 1995 (44 U.S.C. Chapter 35), the Federal Acquisition Regulation (FAR) Secretariat will be submitting to the Office of Management and Budget (OMB) a request to review and approve an extension of a currently approved information collection requirement concerning Payment by Electronic Fund Transfer. This OMB clearance currently expires on August 31, 1999.

DATES: Comments may be submitted on or before July 13, 1999.

ADDRESSES: Comments regarding this burden estimate or any other aspect of this collection of information, including suggestions for reducing this burden should be submitted to: FAR Desk Officer, OMB, Room 10102, NEOB, Washington, DC 20503, and a copy to the General Services Administration, FAR Secretariat, 1800 F Street, NW, Room 4035, Washington, DC 20405.

FOR FURTHER INFORMATION CONTACT: Jeremy F. Olson, Federal Acquisition Policy Division, GSA (202) 501–3221.

SUPPLEMENTARY INFORMATION:

A. Purpose

The FAR requires certain information to be provided by contractors which would enable the Government to make payments under the contract by

electronic fund transfer (EFT). The information necessary to make the EFT transaction is specified in clause 52.232–33, Payment by Electronic Fund Transfer-Central Contractor Registration, which the contractor is required to provide prior to award, and clause 52.232–34, Payment by Electronic Fund Transfer-Other Than Central Contractor Registration, which requires EFT information to be provided as specified by the agency to enable payment by EFT.

B. Annual Reporting Burden

Public reporting burden for this collection of information is estimated to average *30* minutes per response including the time for reviewing instructions, searching existing data sources, gathering and maintaining the data needed, and completing and reviewing the collection of information.

The annual reporting burden is estimated as follows: Respondents, *14,000*; responses per respondent, *10*; total annual responses, *140,000*; preparation hours per response, *.5*; and total response burden hours, *70,000*.

Obtaining Copies of Proposals

Requester may obtain a copy of the justification from the General Services Administration, FAR Secretariat (MVRS), Room 4035, 1800 F Street, NW, Washington, DC 20405, telephone (202) 208–7312. Please cite OMB Control No. 9000–0144, Payment by Electronic Fund Transfer, in all correspondence.

Dated: May 10, 1999.

Edward C. Loeb,

Director, Federal Acquisition Policy Division.

[FR Doc. 99–12152 Filed 5–13–99; 8:45 am]

BILLING CODE 6820–34–P

DEPARTMENT OF DEFENSE

GENERAL SERVICES ADMINISTRATION

NATIONAL AERONAUTICS AND SPACE ADMINISTRATION

[OMB Control No. 9000–0010]

Proposed Collection; Comment Request Entitled Progress Payments

AGENCIES: Department of Defense (DOD), General Services Administration (GSA), and National Aeronautics and Space Administration (NASA).

ACTION: Notice of request for public comments regarding an extension to an existing OMB clearance (9000–0010).

SUMMARY: Under the provisions of the Paperwork Reduction Act of 1995 (44 U.S.C. Chapter 35), the Federal Acquisition Regulation (FAR) Secretariat will be submitting to the Office of Management and Budget (OMB) a request to review and approve an extension of a currently approved information collection requirement concerning Progress Payments. This OMB clearance currently expires on August 31, 1999.

DATES: Comments may be submitted on or before July 13, 1999.

ADDRESSES: Comments regarding this burden estimate or any other aspect of this collection of information, including suggestions for reducing this burden, should be submitted to: FAR Desk Officer, OMB, Room 10102, NEOB, Washington, DC 20503, and a copy to the General Services Administration, FAR Secretariat (MVRS), 1800 F Street, NW, Room 4035, Washington, DC 20405.

FOR FURTHER INFORMATION CONTACT: Jeremy F. Olson, Federal Acquisition Policy Division, GSA (202) 501–3221.

SUPPLEMENTARY INFORMATION:

A. Purpose

Certain Federal contracts provide for progress payments to be made to the contractor during performance of the contract. The requirement for certification and supporting information are necessary for the administration of statutory and regulatory limitation on the amount of progress payments under a contract. The submission of supporting cost schedules is an optional procedure that, when the contractor elects to have a group of individual orders treated as a single contract for progress payments purposes, is necessary for the administration of statutory and regulatory requirements concerning progress payments.

B. Annual Reporting Burden

Public reporting burden for this collection of information is estimated to average *.55* hours per response, including the time for reviewing instructions, searching existing data sources, gathering and maintaining the data needed, and completing and reviewing the collection of information.

The annual reporting burden is estimated as follows: Respondents, *18,000*; responses per respondent, *32*; total annual responses, *576,000*; preparation hours per response, *.55*; and total response burden hours, *316,800*.

Obtaining Copies of Proposals

Requester may obtain a copy of the justification from the General Services Administration, FAR Secretariat (MVRS), Room 4035, 1800 F Street, NW, Washington, DC 20405, telephone (202) 208–7312. Please cite OMB Control No. 9000–0010, Progress Payment, in all correspondence.

Dated: May 10, 1999.

Edward C. Loeb,

Director, Federal Acquisition Policy Division.

[FR Doc. 99–12153 Filed 5–13–99; 8:45 am]

BILLING CODE 6820–34–P

DEPARTMENT OF DEFENSE

Department of the Navy

Notice of Proposed Information Collection; United States Naval Academy

AGENCY: Department of the Navy, DOD.

ACTION: Notice.

SUMMARY: The United States Naval Academy announces a proposed reinstatement of a previously approved public information collection and seeks public comment on the provisions thereof. Comments are invited on: (a) Whether the proposed collection of information is necessary for the proper performance of the functions of the agency, including whether the information shall have practical utility; (b) the accuracy of the agency's estimate of the burden of the proposed information collection; (c) ways to enhance the quality, utility, and clarity of the information to be collected; and (d) ways to minimize the burden of the information collection on respondents, including through the use of automated collection techniques or other forms of information technology.

DATES: Consideration will be given to all comments received by July 13, 1999.

ADDRESSES: Send written comments and recommendations on the proposed information collection to Admissions Office, United States Naval Academy, 117 Decatur Road, Annapolis, Maryland 21402–5017.

FOR FURTHER INFORMATION CONTACT: To request additional information or to obtain a copy of the proposal and associated collection instruments, contact Mr. Nick Pantelides, telephone (410) 293–1803.

SUPPLEMENTARY INFORMATION:

Form Title and OMB Number: Application Procedures for United States Naval Academy; OMB Control Number 0703–0036. Needs and Uses: This collection of information is necessary to determine the eligibility and evaluate overall competitive standing of candidates for appointment to the United States Naval Academy. An analysis of the information collected is made by the Admissions Board during

the process in order to gauge the qualifications of individual candidates.

Affected Public: Individuals or households, Federal agencies or employees.

Annual Burden Hours: 30,000.

Number of Respondents: 10,000.

Responses per Respondent: 1.

Average Burden per Response: 3 hours.

Frequency: On occasion.

Authority: 44 U.S.C. 3506(c)(2)(A).

Dated: May 4, 1999.

Pamela A. Holden,

Lieutenant Commander, Judge Advocate General's Corps, U.S. Navy, Federal Register Liaison Officer.

[FR Doc. 99–12183 Filed 5–13–99; 8:45 am]

BILLING CODE 3810–FF–P

DEPARTMENT OF ENERGY

Consolidated Record of Decision for Tritium Supply and Recycling

AGENCY: U.S. Department of Energy.

ACTION: Consolidated Record of decision for tritium supply and recycling.

SUMMARY: The U.S. Department of Energy (DOE) completed the Tritium Supply and Recycling Final Programmatic Environmental Impact Statement (PEIS) (DOE/EIS–0161) in October 1995. The Tritium Supply and Recycling PEIS assessed the potential environmental impacts of technology and siting alternatives for the production of tritium for national security purposes as well as the impacts of constructing a new Tritium Extraction Facility (TEF) at the Department's Savannah River Site near Aiken, SC.

On December 5, 1995, DOE issued a Tritium Supply and Recycling Record of Decision (ROD) [60 FR 63878] that selected the two most promising alternative technologies for tritium production and established a dual-track strategy that would, within 3 years, select one of those technologies to become the primary tritium supply technology. The other technology, if feasible, would be developed as a backup tritium source. Under the dual-track strategy, DOE would: (1) Initiate the purchase of an existing commercial reactor (operating or partially complete) or irradiation services with an option to purchase the reactor for conversion to a defense facility; and (2) design, build, and test critical components of an accelerator system for tritium production. Any new facilities that might be required, the production-scale accelerator and a Tritium Extraction Facility to support the commercial reactor alternative, would be constructed at DOE's Savannah River Site. Subsequent to the PEIS and the December 5, 1995 ROD, DOE prepared three site-specific EISs: the Accelerator Production of Tritium at the Savannah River Site (APT) (DOE/EIS–0270), the Production of Tritium in a Commercial Light Water Reactor (CLWR) (DOE/EIS–0288), and the Tritium Extraction Facility at Savannah River Site (TEF) (DOE/EIS–0271). The December 1995 ROD also stated that, although it was rejected as a reasonable long-term supply alternative in the PEIS, DOE's Fast Flux Test Facility (FFTF) at the Hanford Reservation in Washington would be re-examined to determine whether it should play any tritium production role.

On December 22, 1998, the Secretary of Energy announced his selection of the commercial light water reactor alternative as the primary tritium supply. This consolidated Record of Decision documents that decision and announces a series of three tiered decisions which, taken together, comprise the Department's plans for establishing a new domestic source of tritium to support the nuclear weapons stockpile. Each decision results from the preparation of a related environmental impact statement. In the order presented, this consolidated record of decision makes the following decisions based on their associated environmental impact statements (EIS):

1. Supplemental Programmatic Decision for Tritium Supply and Recycling: Documents the Secretary of Energy announcement of December 22, 1998; selects the purchase of irradiation services using commercial light water reactors as the primary tritium supply technology; and designates the accelerator system at the Savannah River Site as the backup technology. This ROD supplements the December 1995 ROD described above. Environmental analysis is contained in the Tritium Supply and Recycling PEIS (DOE/EIS–01621, October 1995).

2. Site-specific Decision for the Production of Tritium in a Commercial Light Water Reactor. Selects the Tennessee Valley Authority's (TVA) Watts Bar Unit 1, Sequoyah Unit 1, and Sequoyah Unit 2 reactors for use in irradiating tritium-producing burnable absorber rods (TPBARs). This decision is tiered from and implements the supplemental programmatic decision described above. Environmental analysis is contained in the Final EIS for the Production of Tritium in a Commercial Light Water Reactor (DOE/EIS–0288, March 1999). This EIS is tiered from the Tritium Supply and Recycling PEIS.

3. Site-specific Decision for Construction and Operation of a Tritium Extraction Facility at the Savannah River Site. Selects the alternative that would design, construct, test, and operate a new TEF in the H–Area immediately adjacent to and west of Building 233–H at the Savannah River Site. This facility is an essential element of the system for producing tritium using commercial reactors. This decision is tiered from and implements the supplemental programmatic decision described above. Environmental analysis is contained in the Final EIS for Construction and Operation of a TEF at the Savannah River Site (DOE/EIS–0271, March 1999) which is tiered from the Tritium Supply and Recycling PEIS.

4. Site-specific Decision for the Accelerator Production of Tritium (APT). Selects the specific location at the Savannah River Site and the technologies to be used for the backup tritium supply technology, should its construction be required. This decision is tiered from and implements the supplemental programmatic decision described above. Environmental analysis is contained in the Final EIS for Accelerator Production of Tritium (DOE/EIS–0270, March 1999) which is tiered from the PEIS.

FOR FURTHER INFORMATION CONTACT: For further information on the commercial reactor program and the Tritium Extraction Facility, contact Stephen M. Sohinki, DP–62, 1000 Independence Avenue SW, Washington, DC 20585, by phone (202–586–0838), or electronically (Tritium web site: www.dp.doe.gov and click on ''Tritium Project Office Home Page'') For further information on accelerator production of tritium, contact William P. Bishop, DP–61, 1000 Independence Avenue SW, Washington, DC 20585, by phone (202–586–0046).

For general information on the DOE National Environmental Policy Act process, please contact: Carol M. Borgstrom, Director, Office of NEPA Policy and Assistance, EH–42, U.S. Department of Energy, 1000 Independence Avenue, SW, Washington, DC 20585, (202) 586–4600 or leave a message at (800) 472–2756.

SUPPLEMENTARY INFORMATION:

I. Background

DOE has prepared this consolidated ROD pursuant to the Council on Environmental Quality (CEQ) regulations for implementing the procedural provisions of the National Environmental Policy Act (NEPA)(40

CFR 1500–1508) and the DOE NEPA regulations (10 CFR part 1021). This ROD is based on the Tritium Supply and Recycling Programmatic Environmental Impact Statement (PEIS), and the three site-specific EISs identified above. Non-environmental considerations such as cost, technical maturity, and policy issues are also discussed in this ROD.

The Department of Energy is responsible for supplying nuclear materials for national security needs and for ensuring that the nuclear weapons stockpile remains safe and reliable. Tritium, a radioactive isotope of hydrogen, is an essential component of every nuclear weapon in the current and projected U.S. stockpile. Unlike other materials used in nuclear weapons, tritium decays at a rate of 5.5 percent per year. Accordingly, as long as the Nation relies on nuclear weapons, tritium in each weapon must be replenished periodically. Currently, the U.S. nuclear weapons complex does not have the capability to produce tritium to support the Nation's stockpile.

The President's Nuclear Weapons Stockpile Plan sets forth national security requirements for the current and projected nuclear weapons stockpile. At present, this plan is based on the Strategic Arms Reduction Treaty (START I) between the U.S. and former Soviet Republics. START I, which was signed in July 1991 and became effective in December 1994, reduces the number of strategic nuclear weapons in each side's stockpile. Under the Presidential guidance, new tritium would be needed by about fiscal year (FY) 2005 to offset the decay of tritium in the stockpile, in the required 5-year reserve, and in various operating inventories. Although the actual requirement is classified, the unclassified representation of the steady-state production rate to offset decay would be about 2.5 kilograms per year. If needed to replenish the tritium inventory, the new tritium source should be able to achieve a maximum production rate of around 3 kilograms per year. The START II agreement, which further reduces nuclear stockpiles, was signed in July 1991, but has not been ratified by Russia and is, therefore, not in force. If Russia ratifies START II, the date when new tritium is needed may be as late as 2011 and the steady-state production rate may be as low as about 1.5 kilograms per year.

The Department has not produced any new tritium since the shutdown of the last of its nuclear materials production reactors in 1988. Since that time the Department has examined various methods of producing new tritium. The Department announced on November 11, 1991, that analyses of tritium production alternatives would be incorporated into a programmatic environmental impact statement for the Reconfiguration of the Nuclear Weapons Complex. On October 28, 1994, the Department announced that a separate PEIS for Tritium Supply and Recycling would be prepared (59 FR 54175). On October 27, 1995, the Notice of Availability of the Final PEIS was published (60 FR 55020). Following publication of the Final PEIS, a Record of Decision was issued on December 5, 1995, which stated that the Department would pursue a dual track on the two most promising tritium supply alternatives: (1) to initiate the purchase of an existing commercial reactor (operating or partially complete) or irradiation services with an option to purchase the reactor for conversion to a defense facility; and (2) to design, build, and test critical components of an accelerator system. Within a three-year period, the Department would select one of the tracks to serve as the primary source of tritium. The other alternative, if feasible, would be developed as a backup tritium source. The ROD further stated that the Savannah River Site is selected as the location for an accelerator, should one be built. The ROD also stated that a tritium extraction facility will be constructed at the Savannah River Site if a commercial reactor alternative becomes the primary tritium source. Finally, the ROD stated that the existing tritium recycling facility at the Savannah River Site would be consolidated and upgraded.

In the December 1995 ROD, the Department indicated that the FFTF, which had been rejected as a reasonable long-term production alternative, would be re-evaluated to determine whether it could reasonably play any role in meeting future tritium requirements. In January 1997, the reactor was placed in a stand-by status while additional evaluations were conducted. At the time, placing the reactor in a stand-by condition was thought to provide near-term insurance while the study of the two dual-track options continued.

On December 22, 1998, the Department announced that commercial light water reactors would be used for the production of new tritium and the accelerator would be developed, but not constructed, as the backup technology. Selection of the commercial light water reactor confirms the prior plan to construct a new TEF, an element of the system to produce tritium using reactors. The use of existing commercial reactors was chosen as the preferred alternative. In addition, the Department decided that the FFTF would have no role in tritium supply plans because the Department has high confidence that the primary and back-up roles assigned to the commercial light water reactor and accelerator technologies, respectively, would assure that future tritium requirements are met.

During the 30-day waiting period following publication of the three project-specific EISs in March 1999, DOE received four letters. One from the Department of Human Health and Services regarding the Final EIS for the Tritium Extraction Facility. That letter stated that the potential concerns of the Department of Human Health and Services were addressed in the Final EIS, and that there were no additional comments. The second letter was received from the Department of the Interior regarding the Final EIS for Accelerator Production of Tritium at the Savannah River Site and expressed a number of concerns relating to the biota. Since the APT has been designated as the backup, none of these impacts to biota are expected. However, if a decision is made to pursue the APT at a later date, these concerns would be addressed. The third and four letters, which were from the Environmental Protection Agency's (EPA) Region 4 Office in Atlanta, Georgia, concerned the APT and TEF EISs. The letters stated that DOE adequately responded to all EPA comments, but that EPA continues to have environmental concerns related to the wetlands, surface water, and groundwater impacts for the APT project, and the response to, and potential environmental impacts, associated with accidental releases for the TEF project. If a decision is made to pursue the APT, these concerns would be addressed. The concerns regarding the TEF project will be addressed in further detail during the design and permitting process. No other comments or letters were received.

II. Supplemental Programmatic Decision for Tritium Supply and Recycling

A. Tritium Supply and Recycling Alternatives

The dual-track strategy established in the December 1995 Programmatic Record of Decision defined the alternatives that would remain under consideration: (1) the purchase of an existing commercial reactor (operating or partially complete) or irradiation services with an option to purchase the reactor for conversion to a defense facility; and (2) design and construction of an accelerator system for tritium production. New construction of an

accelerator and/or a new tritium extraction facility would be located at DOE's Savannah River Site near Aiken, SC. No new tritium recycling capabilities or facilities are required or contemplated. This decision was based on the Final Tritium Supply and Recycling Programmatic Environmental Impact Statement (PEIS) (DOE/EIS—0161, October 1995).

This supplemental programmatic ROD makes a choice between the two programmatic alternatives. It compares the alternatives with regard to their ability to meet military requirements in terms of technical maturity, capacity, and schedule risk; regulatory and licensing issues; cost; nonproliferation policy issues; flexibility to meet changing requirements, and environmental impacts.

The commercial reactor alternative has narrowed somewhat since 1995. DOE sought proposals from electrical utilities that operate commercial light water reactors (CLWR). No proposals were submitted to sell a reactor (operating or partially complete) to DOE. The Tennessee Valley Authority (TVA) offered to provide irradiation services using an incomplete reactor, for which DOE would provide funds to finish, plus use of its currently operating reactors as needed. TVA also offered the use of its currently operating reactors alone.

1. Description of Tritium Production Using Commercial Reactors

This section describes the process of producing tritium in a CLWR. Current tritium requirements dictate that two CLWRs would be utilized at any given time. DOE-designed Tritium Producing Burnable Absorber Rods (TPBARs) would be placed in the reactors. DOE would have TPBARs manufactured commercially under contract. A maximum of approximately 3400 TPBARs would be inserted in any one reactor for one fuel cycle. TPBARs perform the same functions as burnable absorber rods, which are used or have been used in commercial reactors to absorb excess neutrons to control local power levels and fuel burnup rates. Commercial burnable absorber rods absorb excess neutrons using the isotope Boron-10 in ceramic form. TPBARs would also use a ceramic but substitute the isotope Lithium-6 for Boron-10. Lithium-6 changes to tritium when neutrons are absorbed. TPBARs would be placed in the reactors during normal refueling outages. The TPBARs would remain in the reactors throughout their normal operating cycle, usually a 15–18 month period. The irradiated TPBARs would be replaced in the reactors with new ones during refueling operations. Reactors potentially engaged in tritium production must have their operating licenses amended by the Nuclear Regulatory Commission (NRC). To meet current requirements, DOE plans for the first irradiation cycle to begin in early FY 2004.

After irradiation, TPBARs would be transported in approved shipping casks to a new TEF which would be constructed at DOE's Savannah River Site and ready for operation no later than February 2006. The tritium in each TPBAR is not gaseous, but is held in a solid matrix by several internal structures. These structures are so effective in retaining the tritium that a high-temperature furnace must be used to remove the tritium as a gas. The TEF would use remotely operated handling equipment and the furnaces that would heat the irradiated TPBARs to around 1,000 degrees Celsius. The gases removed from the TPBARs would be partially purified and pumped to the existing Tritium Recycle Facility at the Savannah River Site for further processing and delivery to the nuclear weapons stockpile. Following extraction, TPBARs, classified as low-level radioactive waste, would then be sent to a low-level radioactive waste disposal facility at the Savannah River Site.

2. Description of Accelerator Production of Tritium

The production of tritium in the proposed Accelerator Production of Tritium facility may be viewed as a four-step process. First, protons are accelerated to high energies. Second the protons strike tungsten to produce neutrons through a nuclear process called spallation. Tritium is produced in the third step, when the neutrons are captured by a helium-3 feedstock (He-3) causing a nuclear reaction which produces tritium and other isotopes of hydrogen. The final step is to separate the tritium from the feedstock and purify it for use in the stockpile.

The APT would use radiofrequency waves to accelerate protons (positively charged atomic particles). Electrical power would be converted to radiofrequency waves outside the accelerator beam, and waveguides (hollow metal conduits) would transmit the waves to cells along the beam path. The accelerator design would enable the proton beam to intersect with the radiofrequency waves in the proper orientation to cause the protons to accelerate; in other words, the radiofrequecy waves would push the protons down the beam tube faster and faster.

Once the protons reached the desired energy, they would be directed toward a target/blanket assembly of tungsten surrounded by lead. The high energy of the protons striking the tungsten target would cause the nuclei of the tungsten atoms to break into fragments, ejecting neutrons and secondary particles in all directions (spallation). These neutrons and some protons would be scattered to surrounding lead blanket modules where more neutrons would be produced through additional nuclear reactions. The neutrons freed during spallation would strike and be absorbed by the feedstock material (i.e., He–30) in the target/blanket. This absorption of neutrons would result in the production of tritium and byproduct atoms. The tritium would then be separated from the feedstock and purified. The purified tritium would be transported to the Tritium Loading Facility at the Savannah River Site where it would be used to refill tritium reservoirs in nuclear weapons.

B. Comparison of Non-Environmental Impacts of Tritium Supply Alternatives

DOE is responsible to the President and its primary customer, the Department of Defense, for establishing an assured source of tritium on a schedule that meets the requirements discussed in the background section above. Several factors, not directly related to environmental impacts, are important in assessing the probability that each tritium supply alternative will meet that responsibility. The factors discussed below are: ability to meet military requirements; regulatory and licensing issues; cost; nonproliferation issues; and flexibility to meet changing requirements.

1. Ability To Meet Military Requirements

To meet military requirements, a tritium source must have low technical risk, must have the capacity to produce tritium at required rates, and must meet schedule deadlines. The tritium supply options are assessed in these terms below:

Technology Maturity/Risk

Since its inception, the APT Project has sought to develop and demonstrate critical components of a tritium production system and to reach a level of maturity in the design of a full-scale production system so that its technical risks, costs, and schedule can be fully understood. At this point a majority of the accelerator system's preliminary design has been completed and a low-energy demonstration accelerator at the Los Alamos National Laboratory in New

Mexico has undergone construction and successful operational testing. Several external reviews have revealed no technical ''showstoppers.'' However, accelerators have never made tritium on a continuous production scale, and the APT would be a first-of-a-kind facility.

Tritium production in reactors has been demonstrated to be safe and technically straightforward. Although there are variations in the technical details, in the past the only method used to produce tritium has been with reactors and tritium-producing ''targets'' containing lithium. DOE began considering commercial reactor target designs for tritium production in the 1960s. The TPBAR to be used in commercial reactors was designed and extensive development and testing done during DOE's previous New Production Reactor Program (1988–1992). Commercial nuclear power is supported by a well developed, mature industrial infrastructure. During that program, rods of essentially the same design as those to be used in commercial reactors were irradiated in DOE's Advanced Test Reactor at the Idaho National Environmental and Engineering Laboratory. Post-irradiation non-destructive and destructive examinations have shown that the rods performed even better than predicted. Various laboratory tests have consistently shown TPBAR component performance to be as good or better than expectations.

Following two extensive technical reviews by the Nuclear Regulatory Commission (NRC) and the approval of an amendment for its operating license issued in September 1997, the Tennessee Valley Authority's (TVA) Watts Bar reactor irradiated 32 TPBARs over a normal operating cycle for a confirmatory demonstration. Frequent monitoring of the reactor coolant and neutron flux indicated no problems with the rods. Following irradiation, the rods were removed from the reactor's spent fuel on March 19, 1999, and visually inspected. The inspection of the 32 TPBARs showed no indications of any kind of problem. In February 1999, DOE submitted the Tritium Production Core Topical Report to the NRC. NRC's review of the report has raised no significant concerns and a Safety Evaluation Report to this effect is now being finalized by the NRC.

Conclusion: While much progress has been made in addressing the technical issues that existed regarding the APT at the time of the 1995 Record of Decision, tritium production technology for light water reactors is more technically mature, and carries with it less technical risk than the APT.

Capacity

The commercial reactor alternative and the APT alternative would both have a maximum production capacity of about 3 kilograms of tritium per year. Commercial reactors routinely operate at full power for extended periods of time. The national average capacity factor for commercial reactors is in excess of 75 percent, including all refueling shutdown periods. The Watts Bar reactor, while irradiating 32 of DOE's TPBARs, recently shut down for refueling, having been in continuous high-power operation for 353 consecutive days. The availability of multiple candidate reactors for irradiating TPBARs also provides high confidence that tritium production capacity requirements can be met. Although much progress has been made, the APT project has not yet demonstrated its tritium production capacity.

Conclusion: Although either alternative should be able to meet capacity requirements, the availability of multiple commercial reactors and their demonstrated capacity factors provides a greater degree of confidence that production goals can be met consistently.

Schedule

The commercial reactor alternative could begin producing its first batch of tritium in October 2003 when one of the candidate reactors is scheduled to complete a refueling outage. Because many technical and regulatory issues have been addressed already, there is a high degree of confidence that this initial irradiation schedule can be met. The first batch could be delivered to the stockpile as tritium gas as soon as the TEF is operational. Selection of the incomplete reactor approach would not impact the schedule because an existing reactor would be used to irradiate the initial batch of TPBARs. Under both reactor alternatives, current START I requirements would be met without the use of the 5-year tritium reserve. The APT alternative would be operational around 2008 and would begin continuous tritium production at that time. This would require that 3 years of the 5-year reserve be utilized for stockpile support. The APT would need to operate at its maximum capacity for a number of years to replace the depleted reserve.

Conclusion: There is a high likelihood that, with adequate funding, the reactor alternatives can meet the schedule and the tritium reserve would not be impacted. The APT would require that at least 3 years of the reserve be consumed and that the machine operate at maximum capacity until the reserve has been restored. Any schedule delay beyond 2008 would potentially utilize the balance of the reserve and thus potentially impact the stockpile. If START II is ratified and implemented, any schedule risk would be eliminated. However, for current stockpile requirements, the commercial reactor alternative has the best chance for meeting schedule requirements.

2. Regulatory and Licensing Issues

Both the reactor and accelerator alternatives would be overseen by bodies external to DOE. The potential for oversight/regulatory issues to impact the tritium alternatives is discussed below.

The NRC would have to amend the operating licenses of existing commercial reactors to permit production-scale irradiation of tritium-producing rods. Requests for license amendments would be submitted in the middle of calendar year 2000. It is expected that the NRC would be in a position to act upon the amendment requests well in advance of the planned October 2003 start of irradiation. Some experience has already been gained in this area because the Watts Bar reactor's operating license was amended in September 1997 to permit the confirmatory test irradiation of 32 TPBARs. That licensing process was completed in a few months. The NRC has completed two reviews of technical reports on the TPBAR submitted by DOE and a third review of a reactor-specific request to amend the Watts Bar reactor's operating license for the confirmatory irradiation demonstration. No significant safety issues were identified.

If a partially complete reactor were finished and brought on line, the facility would have to be licensed as a new nuclear power plant. The licensing process is likely to take up to 5 years. As discussed above, this would not impact national security because initial tritium production would begin with an existing reactor. However, delays in getting the incomplete plant into operation could delay and possibly reduce DOE's receipt of revenues from the plant's power sales. Thus, the only potential regulatory impact would be financial in nature.

The APT design, construction, and operation would be overseen by the Defense Nuclear Facilities Safety Board (DNFSB). To date, the DNFSB has not identified any issues that would affect the availability of this facility. The APT would not require a license for its construction or operation.

Conclusion: The APT option appears to have no regulatory and licensing issues. The existing-reactor sub-option is not likely to be impacted by regulatory and licensing issues. The incomplete reactor sub-option has potential for these issues to impact its schedule, but is not likely to affect tritium production because initial irradiation would be with an existing reactor.

3. Cost

Cost is determined in terms of investment cost and life-cycle cost. Investment cost is defined as the total of all remaining up-front costs necessary to design, develop, construct, startup, or otherwise establish tritium production capacity. Investment costs are generally the same as project costs. Life-cycle cost is defined as the total amount of money spent to produce 100 kilograms of tritium over the life of the alternative to meet current START I requirements. Life-cycle cost includes investment cost, all operating costs, and decontamination and decommissioning (D&D) costs. All cost discussions refer to constant FY 1999 dollars.

The investment cost remaining (FY 1999–2008) to develop, design, construct, and startup the APT facility, sized to meet START I tritium requirements, would be $3.4 billion. The investment cost remaining to establish capabilities to produce tritium through irradiation services with existing commercial reactors and to design, construct, and startup the TEF would be $580 million. This investment cost would increase by $1.2–1.8 billion if finishing an incomplete reactor is included.

The annual operating cost of the APT would be $135 million when meeting START I tritium requirements. The annual operating cost to produce START I quantities of tritium using existing reactors would be $20–60 million. At the high end of this range DOE would pay for the incremental increase in the enrichment of the host reactors' fuel as needed to accommodate TPBARs for tritium production. At the low end of the range DOE would provide blended-down highly enriched uranium from its national security stocks, and the host utility would reimburse DOE for that portion not directly attributable to tritium production. If DOE provides funds to finish an incomplete reactor, under some scenarios, the Government would share in the power sales revenue of that reactor. These revenues would depend on the amount of investment money provided and whether the funds were provided over a short period or an extended period. Large ''block'' investment payments would result in the highest revenue share. Reduced, extended payments would provide no revenue share. Depending on the investment, the annual operating cost to DOE would range from around $30 million of net income to around $25 million of net outlay.

D&D costs for the APT would be $260 million. For the reactor alternative, DOE would be liable only for D&D of the TEF at $8 million. DOE would have no liability for reactor D&D costs.

The APT and TEF would be designed for a 40-year life. Although the NRC licenses of currently operating reactors would expire before then, extension of the reactors' operating licenses is possible, either to meet power demand or tritium requirements or both. For purposes of this cost analysis, it is assumed that suitable reactors will be available throughout the 40-year period.. Thus, all alternatives were compared on the same life-span basis. Life-cycle cost for the APT is estimated to be $9.2 billion. Life-cycle cost for the use of commercial reactors is estimated to be $1.2 billion to $2.9 billion, depending on the investment-revenue combination discussed above.

The present discount value of the APT alternative, using a 3.6 percent discount rate, would be $5.2 billion. The present discount value of the commercial reactor alternative would range from $880 million to $2.0 billion, depending on the investment and fuel enrichment strategies, as discussed above.

Conclusion: Under current requirements, the commercial reactor alternative would cost significantly less than the APT alternative in terms of investment costs, operating costs, D&D costs, life-cycle costs, and present discount value.

Cost To Meet Reduced START II Requirements

If START II comes into force, the tritium need date could be around 2011 and the maximum tritium production rate may be reduced to about 1.5 kilograms per year. If so, a smaller accelerator could be constructed, reducing its investment cost to $2.8 billion. The existing commercial reactor alternative's investment cost remains about the same as the START I case. The accelerator alternative's life-cycle cost under this reduced-requirement scenario would be $7.5 billion. Life-cycle cost for the commercial reactor alternative, using existing reactors would be $2.2 billion or less, depending on the fuel enrichment strategy. Adding completion of an unfinished reactor could drive the life-cycle costs up or down, depending on the investment strategy.

Conclusion: Under START II requirements, the commercial reactor alternative would cost significantly less than the APT alternative in terms of investment cost, operating costs, D&D costs, and life-cycle costs.

4. Nonproliferation Issues

Concerns have been expressed by members of Congress and other individuals and groups regarding the use of a civilian reactor to assist a defense mission. As a result of these concerns, the Congress requested the Department to facilitate a high-level interagency review of the nonproliferation implications of the various tritium production technologies. Participants in the review included the National Security Council, the Department of Defense, the Department of State, the Arms Control and Disarmament Agency, the White House Office of Science and Technology Policy, the Office of the Vice President, and the NRC. The report, Interagency Review of the Nonproliferation Implications of Alternative Tritium Production Technologies Under Consideration by the Department of Energy, was provided to the Congress in July 1998. A summary of conclusions of the report follows:

The interagency report noted that tritium is not a fissionable material, and thus there is no legal prohibition on the production of tritium in a commercial reactor to support the stockpile. The report concluded that ''the nonproliferation policy issues associated with the use of a commercial light water reactor are manageable, and that the Department should continue to pursue the reactor option as a viable source for future tritium production.'' This conclusion was based on a number of factors, including the following:

- Use of commercial reactors for tritium production is not prohibited by statute or international treaty;
- There have been several exceptions over the past several decades to the practice of distinguishing between the civilian and military uses of nuclear power.
- Commercial reactors engaged in tritium production would remain eligible for the application of International Atomic Energy Agency safeguards.
- The commercial reactor option would be operated in compliance with international agreements imposing restrictions on use of transferred materials for peaceful purposes only, e.g., no reactor fuel or component

transferred under these agreements would be used by any reactor making tritium; and

• Further mitigation is offered if the existing reactors are operated by TVA. TVA's statutory charter assigns it a national security mission. TVA's reactors are already government facilities. TVA has made contributions to national security in the past including production of munitions and providing power for the enrichment of uranium for civilian and military purposes. It would, therefore, be entirely appropriate for TVA to be assigned the tritium production mission.

The interagency review concluded that the accelerator option would raise no significant nonproliferation policy issues, assuming that export control measures are maintained. Subsequent to the issuance of the report, concerns have been expressed, applicable to both the APT and to the completion of an unfinished reactor, that the commitment to a major new weapons facility would be inconsistent, either in fact or in appearance, with our commitment to further stockpile reductions and thus to our obligations under the Nuclear Nonproliferation Treaty. These concerns were considered in the tritium technology decision process.

Conclusion: Although concerns have been expressed about each of the tritium production alternatives, nonproliferation policy issues would not preclude the selection of any alternative.

5. Flexibility To Meet Changing Requirements

Since tritium production stopped in 1988, the U.S. tritium requirements have been reduced by almost 75 percent, primarily because of the stockpile reductions resulting from bilateral arms control agreements. The current tritium production requirement is based on supporting a stockpile sized for START I. If START II is ratified by the Russian Duma (legislature), the U.S. may decide to reduce its tritium production requirements, thus moving the need date to 2011 and reducing tritium production requirements. Stockpile reductions beyond START II are possible and would hopefully occur, potentially resulting in further extension of the tritium need date and reductions in tritium production requirements.

The APT has significant flexibility to change its rate of tritium production and therefore its operating costs. It is less flexible in its avoidance of capital investment costs. The APT project plan calls for construction of a ''modular'' accelerator sized to produce about 1.5 kilograms per year, the capacity sufficient for a START II stockpile. According to the plan, if current tritium requirements are not reduced by early FY 2000, accelerator construction would proceed with a full-size machine having a capacity of 3 kilograms per year with a $500 million increase in investment cost. If tritium requirements are reduced after early FY 2000 much of the investment cost of the APT would be ''sunk.''

The use of the existing, operating reactors is the most flexible option with respect to changing stockpile levels. If the tritium need date is extended during FY 1999–2000, most investment for this alternative could be suspended indefinitely and then restarted later. A substantial portion of DOE's operating costs would be based on tritium demand on a pay-as-you-go basis. Except for minimal standby costs, DOE would pay for irradiation services, TPBAR manufacturing, and transportation operations only during those years when tritium is actually required. The amount spent for irradiation services would, to a great degree, depend on the amount of tritium produced. If the tritium need date is extended before the TEF handles its first increment of radioactive material, that facility could remain in standby indefinitely for less than $1 million per year.

If completion of an unfinished reactor is considered, the reactor alternative's flexibility characteristics become much like those of the APT. While there is great flexibility in amounts of tritium that can be produced, the large up-front investment cost would have no relation to tritium requirements. Once DOE committed itself to completion of the reactor, there would be no opportunity to reduce investment costs if stockpile tritium requirements were reduced. Revenues would be returned to DOE whether tritium is needed or not, but the cost per kilogram would obviously be higher if tritium requirements were substantially reduced as a result of further arms reduction agreements. The annual net operating cost (positive or negative) of this alternative would vary somewhat with tritium demand because of reductions in the cost for TPBAR manufacturing and transportation, thus reducing the total-life cycle cost.

Conclusion: The use of existing reactors potentially results in the greatest degree of flexibility to meet changing requirements, especially in view of the potential for future reductions in the nuclear weapons stockpile.

C. Comparison of Environmental Impacts of Tritium Supply Alternatives

Since the December 1995 Tritium Supply and Recycling PEIS ROD, a substantial amount of work has been accomplished on both the CLWR tritium production alternative and the APT alternative, including the issuance of project-specific Environmental Impact Statements. In the course of preparing this supplement to the December 1995 ROD for the tritium supply technology decision, in order to select between the two technologies, DOE reviewed the Tritium Supply and Recycling Final PEIS to ensure that the information contained there is still valid. The conclusion of that review is that the Tritium Supply and Recycling PEIS remains a valid basis for the programmatic portion of this consolidated ROD.

In the December 5, 1995 ROD for the Tritium Supply and Recycling PEIS, environmental impacts of the various tritium supply technologies were compared and a general conclusion was reached that ''[for all of the reasonable tritium supply technology alternatives] the environmental impacts are generally small and, except for the commercial reactor options to purchase an existing reactor or irradiation services, the impacts are within the same range. The Department considers the commercial reactor options of purchasing an existing reactor or irradiation services to be the environmentally preferred alternative.'' [60 FR 63889] As discussed below, these conclusions remain true.

Described below are the relative differences in environmental impacts between tritium production in operating CLWRs (TVA's Watts Bar Unit 1 and Sequoyah Units 1 and 2 are used in the analysis) and an incomplete CLWR (TVA's Bellefonte Unit 1 is used in the analysis), and construction and operation of the APT at the Savannah River Site. For an incomplete CLWR, the environmental analysis attributes all of the impacts from completing construction and operating the plant to the tritium production mission. Additionally, because any tritium produced by a CLWR would need to be extracted from TPBARs prior to delivery to the nuclear weapons stockpile, the impacts associated with operation of a TEF are included in the discussion below, as appropriate. DOE has decided previously that a TEF capability would be constructed regardless of whether the CLWR option is selected as the primary or the backup tritium supply [60 FR 63890]. In the latter case the TEF would be needed as part of a viable backup system and could have been

incorporated as part of the APT facility. Therefore, construction impacts of TEF apply if either the CLWR or APT option is chosen, but TEF operating impacts apply only to the CLWR. Because of the availability of data in the tiered, final EISs for use of commercial reactors for tritium production, the TEF, and the APT, the discussion below is based upon the best available information and analyses that have been developed to date.

1. Construction Impacts

For tritium production in a CLWR, construction impacts would range from none (for operating CLWRs) to minor (for a CLWR which is currently approximately 90 percent complete, and would only require internal modifications). The predominant construction impact associated with an incomplete CLWR would be on socioeconomics, as approximately 4,500 direct jobs and 4,500 indirect jobs could be created during the peak year of construction. The creation of approximately 9,000 total jobs would have a significant positive impact on the economic area surrounding the incomplete reactor. For the APT at the Savannah River Site, construction impacts would consist of: land disturbance of approximately 250 acres; water use of less than 1 percent of current use; and socioeconomic impacts associated with a peak-year construction workforce of approximately 1,400 direct jobs and approximately 900 indirect jobs. The creation of approximately 2,300 total jobs would have a significant positive impact on the economic area surrounding the Savannah River Site. Construction impacts associated with a TEF at SRS would be minimal. Land disturbance would occur in a densely developed industrial area. Water use would be less than 1 percent of current site use. Socioeconomic impacts associated with a peak-year workforce would be about 740 direct jobs which would have a positive stabilizing influence on SRS employment but an insignificant impact on regional employment.

Conclusion: With respect to construction impacts associated with tritium production, use of an existing CLWR would have the least impact on the natural environment. Completion of an unfinished reactor would have positive socioeconomic impacts, as would the APT at SRS. Using an existing CLWR would have no socioeconomic impacts. For all alternatives, the environmental impacts associated with construction are considered small.

2. Operating Impacts

For an operating CLWR, there would either be no impacts, or negligible impacts, to resources such as: land, infrastructure, noise, visual, air quality, water resources (use and quality), geology and soils, archeological and historic, and socioeconomics. Tritium production and extraction could cause additional impacts in the following resources: spent fuel generation; human health (normal operations and accidents); low-level radioactive waste (LLW) generation; and transportation.

For the alternative that would complete, start up, and operate an incomplete reactor, the operating impacts include those impacts associated with a new commercial nuclear power plant. The following resources would be affected: infrastructure (including visual resources); water resources; spent fuel generation; human health (normal operations and accidents); LLW generation; transportation; and socioeconomics.

Operation of a TEF at the Savannah River Site would affect the following resources: infrastructure; water resources; human health (normal operations and accidents); LLW generation; and socioeconomics.

For the APT, tritium production could cause impacts in the following resources: infrastructure; surface water; human health (normal operations and accidents); LLW generation; and socioeconomics. For the resources potentially affected during operation of any tritium supply technology, the most significant discriminators between alternatives are: infrastructure, spent fuel, human health (including impacts from accidents), low-level waste generation, and socioeconomics. These resources are discussed below for the tritium production alternatives, as appropriate.

Infrastructure

The production of tritium in an operating CLWR would have no impact on the local infrastructure. The impacts of operating a newly completed reactor would produce more than 1,200 megawatts of usable electric power. In an area such as the Tennessee Valley, this beneficial impact would tend to reduce the need for operation of coal-fired or gas-fired power plants, or could offset the need for additional power plants in the future, potentially reducing future air emissions. Although visual resources surrounding the incomplete reactor site would be negatively impacted by a cooling tower plume, this would not be significant enough to change the plant's existing visual resource classification. For the operation of the TEF, estimates for base load electricity use are approximately 2.4 megawatts of electric power, which would be provided through the existing infrastructure at SRS.

For the APT, estimates for base load electricity use are up to 350 megawatts of electric power. Environmental impacts associated with production of electricity by a coal-fired or gas-fired power plant would consist mainly of increased air emissions; however, no air quality standards are expected to be exceeded. The visual impacts of the APT are not deemed significant because the facility would not be visible from the Savannah River Site boundaries to ground-level observers.

Conclusion: Operation of a newly completed reactor would produce a positive impact on the local infrastructure by producing more than 1,200 megawatts of electric power. An operating CLWR used for tritium production would have no additional impact on the local infrastructure. The TEF would have a negligible impact on the local infrastructure at the Savannah River Site. The APT would have a minor negative environmental impact on the local infrastructure by requiring approximately 350 megawatts of electric power.

Spent Fuel

The reactors considered here each use 193 fuel assemblies when operating. At each refueling a percentage of these assemblies are removed from the reactor and placed in the reactor's spent fuel storage pool. The number of assemblies of spent fuel generated by an existing reactor could increase as a result of tritium production. Increases could range from approximately 60 spent fuel assemblies per cycle if a CLWR is loaded with a maximum of 3,400 TPBARs, to no increase in spent fuel if a CLWR is loaded with less than approximately 2,000 TPBARs. The environmental impacts associated with long-term, on-site, dry-cask storage of spent fuel are not significant. For a newly completed CLWR, approximately 72 spent fuel assemblies would be generated during reactor operations without tritium production. For nominal tritium production, the amount of spent fuel generated would not increase as long as less than approximately 2,000 TPBARs are loaded into the reactor. If maximum tritium production is needed, up to 3,400 TPBARs would be used and approximately 69 additional spent fuel assemblies would be generated per cycle. In this regard, it is DOE's

intention to minimize, if not eliminate, the generation of additional spent fuel by limiting the number of TPBARs inserted in a single reactor. Neither the TEF, nor the APT, would generate spent fuel.

Conclusion: Operation of a newly completed reactor would generate the most additional spent fuel. Use of currently operating reactors could lead to a limited incremental increase in spent fuel. The APT would generate no spent fuel.

Human Health (Normal Operations)

By adding tritium production to the currently operating reactors, there would be additional radiation doses to workers and the public from tritium production. The incremental increase in annual average worker dose is estimated at approximately 1.1 millirem, while the total population dose within 50 miles is estimated to increase by approximately 2.0 person-rem per year during normal operations. In terms of potential impacts, these values are not significant. For example, a 2.0 person-rem dose translates into a latent cancer fatality risk of 1 in 1,000 years. For the average worker, a 1.1 millirem annual dose translates to a risk to that worker of a latent cancer fatality every 2.3 million years.

By finishing the incomplete reactor and operating it to produce electricity and tritium, there would be radiation doses to workers and the public that do not currently occur. The average annual worker dose is estimated at a maximum of approximately 105 millirem, of which 104 millirem would result from operation of the reactor to produce electricity, and 1.1 millirem would be from tritium operations. The annual total population dose within 50 miles is estimated to be a maximum of approximately 2.3 person-rem. In terms of potential impacts, these values are not significant. For example, a 2.3 person-rem dose translates into a latent cancer fatality risk of 1 in 870 years. A 105 millirem annual dose translates to a risk to an average worker of a latent cancer fatality every 23,000 years.

Operation of the TEF at the Savannah River Site would result in small radiological impacts to workers and the public from tritium production. The average annual worker dose is estimated at approximately 40 millirem, while the total population dose within 50 miles is estimated to increase by approximately 0.77 person-rem per year. In terms of potential impacts, these values are not significant. For example, a 0.77 person-rem dose translates into a latent cancer fatality risk of 1 in 2600 years. For the average exposed worker, a 40 millirem annual dose translates to a risk to that worker of a latent cancer fatality every 62,500 years.

Operation of the APT would result in small radiological impacts to workers and the public from tritium production. The average annual worker dose is estimated at a maximum of approximately 144 millirem, while the total population dose within 50 miles is estimated to be approximately 2.0 person-rem. In terms of potential impacts, these values are not significant. For example, a 2.0 person-rem dose translates into a latent cancer fatality of 1 in approximately 1,000 years. A 144 millirem annual dose translates to a risk to an average worker of a latent cancer fatality approximately every 17,600 years.

Conclusion: Radiological impacts for normal operations are considered small for all alternatives. The APT and commercial reactor options would have comparable impacts to the population. Use of an operating CLWR would have the smallest impact to workers.

Human Health (Accidents)

Based upon tests and analyses that had been performed previously as part of the DOE's New Production Reactor program, the Tritium Supply and Recycling PEIS concluded that ''it appears that no new significant safety hazard is introduced as a result of a decision to produce tritium in an existing CLWR.'' [PEIS, page 4–524] Nonetheless, the PEIS also acknowledged that a complete reactor-specific evaluation remained to be completed. The CLWR EIS provides a detailed evaluation of impacts from accidents on a site-specific basis for the CLWR reactor alternatives. Based upon the CLWR EIS evaluation, the conclusion in the PEIS is further supported. The CLWR EIS documents that the potential impacts from tritium production on accident impacts is small. For design-basis accidents at operating reactors, the risk of a latent cancer fatality to an average individual from tritium production in the 50-mile population surrounding a CLWR would be approximately 1 in 490 million years. At the incomplete reactor site, this risk would be approximately 1 in 1.3 billion years. For beyond design-basis accidents, tritium production would result in very small changes in the consequences of an accident. This is due to the fact that the potential consequences of such an accident would be dominated by radionuclides other than tritium. At the operating reactors, the additional risks to the 50-mile population from adding tritium production would be less than one additional cancer per every 100,000 years from a beyond design-basis accident. At the incomplete reactor site, the total risk of the new reactor and the added tritium mission to the 50-mile population would be approximately 11 latent cancer fatalities per 100,000 years from a beyond design-basis accident.

The potential impacts to the public from accidents associated with operation of the TEF at the Savannah River Site are extremely small. For the design-basis accident, the risks to the 50-mile population would be approximately 7 latent cancer fatalities per 100,000 years.

The potential impacts to the public from either a design-basis or beyond design-basis accident from the APT are small. For a design-basis accident, the risk of a latent cancer fatality to an average individual in the 50-mile population would be approximately 1 in 470 million years. For beyond design-basis accidents, the risks to the 50-mile population would be approximately 3 latent cancer fatalities per 100,000 years.

Conclusion: The risks associated with accidents are small for all the tritium production alternatives. Differences between the CLWR and APT are not deemed to be significant.

Low-Level Radioactive Wastes

LLW generation at the operating reactors could increase by 0.43 cubic meters annually as a result of tritium production. The impact of disposing of the additional LLW at the Barnwell commercial disposal facility at Barnwell, South Carolina would represent much less than 1 percent of the total LLW that is currently disposed of at that facility. The newly completed reactor would generate approximately 40 cubic meters of LLW annually, which would also be less than 1 percent of the total LLW that is disposed of annually at the Barnwell LLW commercial disposal facility. Operation of the TEF would generate approximately 232 cubic meters of LLW annually. These wastes would be manageable using existing waste management treatment, storage, and disposal facilities at the Savannah River Site.

The APT would generate approximately 1,400 cubic meters of LLW annually. These wastes would be manageable using existing waste management treatment, storage, and disposal facilities at the Savannah River Site. The environmental impacts of all waste types for all alternatives, including LLW, would be small and manageable with existing facilities.

Conclusion: Although all of the waste generation impacts are acceptable, the

use of currently operating reactors would generate the smallest amount of low-level wastes from tritium production. For all alternatives, the environmental impacts of all waste types, including low-level waste would be small and manageable with existing facilities.

Socioeconomics

Little or no socioeconomic impact is expected by adding the tritium production mission at an operating CLWR. Operation of a newly completed CLWR would add approximately 800 direct and 800 indirect jobs. The socioeconomic impacts of the 1,600 total jobs would have a positive impact on the economic area surrounding the reactor site. Operation of the TEF would add approximately 108 direct jobs. This would not have any significant impact on the local socioeconomic area. Operation of the APT would add approximately 500 direct jobs and 335 indirect jobs. The socioeconomic impacts of the 885 total jobs would have a positive impact on the economic area surrounding SRS.

Conclusion: Operation of a newly completed reactor and the APT would have the greatest positive socioeconomic impacts, while use of currently operating CLWRs to produce tritium would involve insignificant socioeconomic impacts.

Transportation

There will be impacts associated with transporting irradiated TPBARs from the reactor sites to the TEF at the Savannah River Site. There would be approximately 13 shipments of TPBARs annually to SRS which would result in an annual human health risk, over the entire route of the shipments, of less than 1 latent cancer fatality every 100,000 years. The impact on any one individual would be less than that. Because the Tritium Loading Facility and the APT would be located at SRS, there are no impacts directly associated with transportation.

Conclusion: Although all the transportation impacts are negligible, the APT has the least impact.

3. Overall Environmental Conclusion

As described above, and as documented in the environmental analyses that have been developed, it is expected that the overall environmental impacts associated with tritium production in either a CLWR or the APT would be small. Consequently, the environmental impacts associated with the two alternatives are not considered a major discriminating factor in this tritium technology decision. The December 1995 Programmatic ROD stated that the use of existing CLWRs for tritium production would be the environmentally preferred alternative. Subsequent analyses, discussed here, confirm this still to be true.

D. Programmatic Decision

Both technology alternatives are feasible. Consistent with the Department's December 22, 1998, announcement, and based on the above analysis, DOE selects the use of existing commercial light water reactors as the primary technology to produce tritium for national security purposes. In implementing this decision, DOE will construct a new Tritium Extraction Facility on the Savannah River Site.

The use of commercial light water reactors is selected to be the primary tritium supply technology because analysis leads to the conclusion that this technology:

- Would have the best chance of meeting all military requirements due to:
- Lowest technical risk.
- Lowest schedule risk.
- Highest confidence for meeting capacity requirements.
- Would have the lowest investment and life-cycle costs.
- Offers potential to be the most flexible in meeting changing requirement.
- Offers potential to have the least environmental impact.

The Accelerator Production of Tritium (APT) is designated as the backup tritium production technology. The APT Project will complete Engineering Development and Demonstration (ED&D) activities and final design for a few key elements of the accelerator system. Completion of these activities would permit expedient initiation of facility construction if the accelerator is called upon.

In January 1997, the Fast Flux Test Facility (FFTF) was placed in a safe standby condition as near-term ''insurance'' given the uncertainties at that time with the dual-track technologies for tritium production. Because it could not produce enough tritium to meet production requirements, it could not serve as a potential primary long-term tritium supply source. The Department's evaluation of FFTF has focused on whether it can or should play any role as an interim source of tritium until one of the other technologies is implemented. The Department is fully confident that the tritium supply strategy embodied in this decision can meet any current or future tritium requirements. Consequently, the Department's FFTF will have no tritium production role. A separate study is being conducted to determine if that reactor should be restarted and operated for other purposes.

III. Site-specific Decision for the Production of Tritium Using Commercial Light Water Reactors (CLWR)

A. CLWR EIS Alternatives

In conformance with the Department's December 22 announcement, the preferred alternative identified in the CLWR Final EIS is to produce tritium in the Watts Bar and Sequoyah reactors. As a result of the programmatic decision in this ROD (see section II), DOE will produce tritium in a CLWR, and the APT is designated as the back-up technology. Consequently, the comparisons described in this section are focused solely on the TVA reactor alternatives, and not the APT.

The CLWR EIS evaluates the following alternatives: (1) No Action Alternative (which would result in the production of tritium in an accelerator at the SRS); and (2) Tritium production at one or more of the following Tennessee Valley Authority (TVA) CLWRs: Watts Bar Nuclear Plant Unit 1 (Spring City, TN); Sequoyah Nuclear Plants Units 1 and 2 (Soddy Daisy, TN); and Bellefonte Nuclear Plants Units 1 and 2 (Hollywood, AL). The Watts Bar and Sequoyah reactors are existing, operating CLWRs that produce electricity. Tritium production could be performed in these reactors without any significant modifications to these facilities and would not affect electricity production. The Bellefonte units are unfinished nuclear reactors. Bellefonte Unit 1 is approximately 90% complete, and Unit 2 is approximately 58% complete. In order to produce tritium in a Bellefonte reactor, construction would have to be completed and an operating license would have to be received from the NRC.

B. Non-Environmental Comparison of CLWR Reactor Alternatives

1. Cost and Flexibility Factors

Investment cost is defined as the total of all remaining up-front costs necessary to design, develop, construct, startup, or otherwise establish tritium production capacity at each of the CLWRs. Investment costs are generally the same as project costs. Life-cycle cost is defined as the total amount of money spent to produce about 100 kilograms of tritium over the life of the alternative. Life-cycle cost includes investment cost, all operating costs, and decontamination and decommissioning (D&D) costs.

Cost to Meet Current Requirements (cost comparisons are expressed in constant FY 1999 dollars).

The investment cost for the tritium-supply system that would use the Watts Bar and Sequoyah reactors is estimated to be about $580 million, of which approximately $350 million are associated with designing, constructing, and starting up the new TEF. Total investment costs for the tritium-supply system that includes the Bellefonte alternative are estimated to be $1.8 billion to $2.4 billion, depending on the plan selected for payments to TVA to complete the reactor. The Watts Bar/Sequoyah alternative could be accommodated within the DOE Defense Programs budget but the Bellefonte alternative cannot.

The life-cycle cost for the Watts Bar and Sequoyah reactors ranges from $1.4 billion to $2.9 billion, based on the letter agreement between DOE and TVA signed on February 25, 1999. This includes $8 million for D&D of the TEF. The upper end of the life-cycle cost range assumes that DOE would pay cash for the incremental increase in reactor fuel enrichment needed for a reactor to accommodate TPBARs. The lower end of the range assumes that highly enriched uranium, drawn from DOE's defense stocks, would be blended down to provide all the fuel for the host reactors. TVA would reimburse DOE at a market-based rate for that portion of the fuel cost not directly attributable to tritium production. Present discount value for the Watts Bar/Sequoyah option would be in the range of $880 million to $1.6 billion.

Life-cycle cost of the Bellefonte alternative would be $1.2 billion to $2.8 billion, depending on the plan for payments to TVA and DOE's share of Bellefonte's power sales revenues. Because annual budget limitations would likely prevent DOE from making large up-front payments to TVA to complete Bellefonte, the lower-revenue-share/higher-life-cycle-cost scenario is far more likely than the high revenue/low life-cycle cost scenario. For the Bellefonte alternative, no fuel transactions are assumed. Present discount value would be in the range of $1.6–2.0 billion. D&D of the TEF, but no other facility, is included.

Conclusion: The Watts Bar/Sequoyah alternative has the lowest investment cost which can be accommodated within the DOE national security programs budget. There is also strong potential for the Watts Bar/Sequoyah option to have the lowest life-cycle cost because of the likelihood that Bellefonte life-cycle costs would be near the high end of the range. In addition, the Watts Bar/Sequoyah alternative has a significantly lower financial risk because DOE would not pay until tritium is produced. With the Bellefonte alternative there is a degree of risk that, having paid for the plant, DOE would not receive any return from net power revenues because of changes in the power market or failure of the reactor to go into operation.

Cost To Meet Reduced START II Requirements

If START II comes into force, the tritium need date could be around 2011 and the maximum tritium production rate may be reduced to about 1.5 kilograms per year. If so, the existing commercial reactor alternative's investment cost would remain about the same as the current case. Life-cycle cost for the commercial reactor alternative, using the existing TVA reactors would be in the range of $2.2–2.5 billion, based on the DOE-TVA letter of agreement of February 25, 1999. The upper end of this range assumes DOE pays cash for incremental increases in reactor fuel enrichment. The low end of this range assumes DOE fuel stocks are blended to provide for the incremental increase in fuel enrichment. The range could be lower still if TVA purchased all its fuel from DOE. The Bellefonte alternative's relatively high investment costs would not change under a START II scenario and the life-cycle cost would be reduced by $100 million or less.

Conclusion: Under a START II scenario, investment and life-cycle costs would be lowest for the Watts Bar/Sequoyah alternative.

Flexibility To Meet Changing Requirements

If START II is ratified, the U.S. may decide to reduce its tritium production requirements, thus moving the need date to around FY 2011 and reducing tritium production requirements. Stockpile reductions beyond START II are also possible and would result in further extension of the tritium need date and reductions in tritium production requirements.

The Bellefonte reactor alternative's flexibility characteristics are limited. While there is great flexibility in amounts of tritium that can be produced, the large up-front investment cost would have no relation to tritium requirements. Once DOE committed itself to completion of the reactor, there would be no opportunity to reduce investment costs if stockpile tritium requirements were reduced. The annual net operating costs of this alternative would vary slightly with tritium demand only because of reductions in the cost for TPBAR manufacturing and transportation, thus reducing the total life-cycle cost.

The use of the existing Watts Bar and Sequoyah reactors is the most flexible with respect to changing stockpile levels. If the tritium need date is extended, most investment for this alternative could be suspended indefinitely and then restarted later. A substantial portion of DOE's operating costs would be based on tritium demand on a pay-as-you-go basis. Except for minimal standby costs, DOE would pay for irradiation services, TPBAR manufacturing, and transportation operations only during those years when tritium is actually produced. The amount spent for irradiation services would be dependent on the amount of tritium produced. If the tritium need date is extended before the TEF handles its first increment of radioactive material, that facility could remain in standby indefinitely for less than $1 million per year.

Conclusion: The use of the existing Watts Bar and Sequoyah reactors results in the greatest degree of flexibility to meet changing requirements, especially in view of the potential for future reductions in the nuclear weapons stockpile.

Arms Control/Nonproliferation

The use of the currently operating Watts Bar and Sequoyah reactors has unique advantages not available with any other alternative, including the Bellefonte option, which serve to offset the nonproliferation implications of using these reactors. It is the only option that does not require a very large up-front capital expenditure. It is the only option that allows the nation to pursue the goal of further arms reductions without commitment to a major new weapons facility. By selecting Watts Bar and Sequoyah, the nation is assured of a long-term option to make tritium, which may not have to be exercised for many years if arms reduction efforts are successful, as DOE hopes they would be.

By not committing itself to the construction of a major new weapons facility, the U.S. can underscore to other nations, especially would-be proliferant nations, its continuing pursuit of smaller nuclear weapons stockpiles. This would be consistent with recent U.S. actions, including cessation of underground nuclear testing, the stoppage of plutonium production, and closure or withdrawal of defense missions from several sites in the nuclear weapons complex. Commitment to a major new weapons facility could be seen as building up U.S. nuclear

weapons production capabilities at a time when the U.S. is seeking to reassure other nations of its commitment to nuclear arms reductions.

These factors offset the fact that the use of the three reactors for tritium production would depart from the general practice of maintaining a distinction between U.S. defense and civilian nuclear activities. Moreover, the Department has determined that the impact of this issue on U.S. nonproliferation policy is manageable, given the surrounding circumstances enumerated above.

Conclusion: The use of the currently operating Watts Bar and Sequoyah reactors is most consistent with stated U.S. nuclear weapons stockpile reduction and nonproliferation goals.

2. Technical Factors

Capacity and Schedule

The Bellefonte alternative and the Watts Bar/Sequoyah alternative could both achieve a production capacity of about 3 kilograms of tritium per year. No matter which alternative is selected, the first batch of tritium could begin production in early FY 2004 when the Watts Bar reactor is scheduled to complete a refueling outage. Because many technical and regulatory issues have been addressed already, there is a high degree of confidence that this initial irradiation schedule can be met. The first batch of tritium gas could be delivered to the stockpile as soon as the TEF is operational. Because the Watts Bar and Sequoyah reactors would be used to irradiate the initial batches of TPBARs, delays in completing the Bellefonte reactor would not be expected to impact the tritium production schedule. Under current START I requirements, neither reactor alternative would require the use of the tritium reserve.

Conclusion: Each reactor alternative can achieve capacity requirements. There is a high likelihood that, with adequate funding, each of the reactor alternatives can meet the schedule and the tritium reserve would not be affected.

Regulatory and Licensing Issues

The Bellefonte alternative would have to be licensed as a new nuclear power plant. The plant's initial NRC operating license would also permit tritium production. This process is likely to take up to 5 years. This would not affect national security because initial tritium production would begin with the Watts Bar reactor. Delays in getting Bellefonte in operation would, however, delay and possibly reduce DOE's receipt of revenues from Bellefonte power sales, if any.

The NRC would have to amend the operating licenses of the Watts Bar and Sequoyah reactors to permit production-scale irradiation of tritium-producing rods. DOE expects that NRC would be in a position to act upon the amendment requests well in advance of the planned October 2003 start of irradiation. Some experience has already been gained in this area because the Watts Bar reactor's operating license was amended to permit the confirmatory test irradiation of 32 TPBARs.

Conclusion: The Bellefonte alternative has potential for these issues to impact its schedule, but is not likely to affect tritium production. However, delays in getting Bellefonte on line would reduce the Government's receipts from its share of Bellefonte revenues, if any. The Watts Bar/Sequoyah option is not likely to be affected by regulatory issues. Watts Bar and Sequoyah are preferred over Bellefonte because the completion and initial licensing of a new nuclear facility entails greater technical and financial risk than obtaining a license amendment for existing facilities.

C. Comparison of Environmental Impacts of CLWR Alternatives

The relative differences in environmental impacts between tritium production in operating CLWRs (Watts Bar and Sequoyah) and the completion and operation of the incomplete Bellefonte Unit 1 reactor are described in the Supplemental Programmatic Record of Decision, Section II.C, above. As described in that section and as documented in the CLWR EIS, DOE expects that the overall environmental impacts associated with tritium production in a CLWR would be small. Consequently, the environmental impacts associated with the CLWR alternatives are not considered a major discriminating factor in this decision. Based on all of the environmental factors considered, the use of the Watts Bar and Sequoyah reactors is the environmentally preferred alternative.

D. CLWR Decision

DOE selects the Watts Bar Unit 1 and the Sequoyah Unit 1 and 2 reactors as the specific CLWRs to produce tritium for national security purposes. Compared to completing the Bellefonte reactor, the use of the currently operating Watts Bar and Sequoyah reactors for tritium production would have the:

- Lowest investment cost and lowest life-cycle cost under most-likely scenarios.
- Lowest financial risk.
- Greatest flexibility to meet changing requirements.
- Most consistency with stated arms reduction goals.
- Lowest overall incremental environmental impact.

By selecting the Watts Bar and Sequoyah reactors, highly enriched uranium, drawn from DOE's defense stocks, would be blended down to provide for the enrichment increase.

IV. Site-Specific Decision for Construction and Operation of a Tritium Extraction Facility (TEF) at the Savannah River Site

A. TEF Alternatives

The proposed action addressed in the Final EIS for the Construction and Operation of a TEF at the Savannah River Site (SRS) is to design, construct, test, and operate TEF at SRS to provide tritium extraction capability to support tritium production technology. The purpose of TEF is to extract tritium-containing gases from TPBARs irradiated in a CLWR or from targets of similar design, and deliver the tritium-containing gases to Building 233–H, the existing Tritium Loading Facility, for final purification. As described below, DOE evaluated two reasonable alternatives and a no-action alternative in the TEF Final EIS.

1. Construct a New Facility in the H-Area (Preferred Alternative)

As identified in the TEF Final EIS, the preferred alternative is to locate TEF in H-Area, immediately adjacent to and west of Building 233-H within the boundaries of SRS. The reasons for co-locating TEF close to Building 233-H are: (1) To share common support facilities, services, and some personnel; (2) to facilitate the transfer of tritium between the two facilities; and (3) to use certain gas-handling processes located in H-Area. TEF would consist of a concrete industrial facility constructed partly below grade. The facility would be divided into two major areas: (1) A remote handling area (RHA) and (2) a tritium processing building. The tritium processing building would be entirely aboveground; the floor of the RHA would be below grade. Construction of the proposed facility would require approximately 4 to 5 years. Major process and operation systems included within the proposed TEF would be: (1) The Receiving, Handling, and Storage System that would support all functions related to the receipt, handling, preparation, and storage of incoming radioactive sources and outgoing radioactive waste materials; (2) the Tritium Extraction System that would

get tritium and other gases from irradiated TPBARs, remove contaminants from the gas stream, and store the hydrogen isotope/helium mixture; (3) the Tritium/Product Processing Systems that would separate and purify process gases from the irradiated TPBAR materials; (4) the Tritium Analysis and Accountability Systems that would support monitoring and tritium accountability; (5) the Solid Waste Management System that would receive solid waste generated by TEF for management and storage prior to disposal in the SRS E-Area vaults; and (6) the Heating, Ventilation, and Air Conditioning System that would provide and distribute conditioned supply air to the underground RHA and the aboveground tritium processing area and also discharge exhaust air to the environment via a 100-foot stack.

2. Upgrading the Existing Allied General Nuclear Services (AGNS) Facility

An alternative to constructing a new TEF within H-Area is to refurbish and use the existing Allied General Nuclear Services (AGNS) facility located in Barnwell County, adjacent to the eastern boundary of SRS. AGNS was completed in 1976, and portions of the facility were tested with natural uranium in anticipation of obtaining an operating license to process commercial spent nuclear fuel. However, due to a change in government policy on reprocessing commercial spent nuclear fuel, the facility never opened. It was cleaned up and placed in standby in 1977 and shut down in 1983. The AGNS facility was designed and built to NRC standards. It would not meet all applicable DOE Orders without major modifications as discussed below. Utilization of AGNS would necessitate some new construction and some modifications. Extraction furnaces would have to be designed, built, and installed. A drying oven to remove pool water from CLWR TPBAR bundles or bundles of targets of similar design unloaded in the wet basin would be required (at AGNS, TPBARs would be stored in existing fuel storage basins). A process gas stripper would have to be added to reduce stack tritium releases. Although rail lines to the existing facility have been removed, the tracks within the facility staging area and into the cask unloading bays are still in place. Roads on the AGNS property need moderate repair; and a short connecting road tying AGNS into the SRS road system would have to be constructed. Other requirements include refurbishing the heating, ventilation, air conditioning (HVAC) fans, motors, high-efficiency particulate air (HEPA) filters and dampers; and replacing the chiller water, fire protection, electrical, security, and personnel protection systems.

3. No Action Alternative

Under the no-action alternative, DOE would not construct and operate a TEF either at the preferred location in H-Area or at the alternate location at AGNS. Under the no-action alternative, DOE could incorporate tritium extraction capability into the APT facility at SRS. However, because the use of existing commercial light water reactors has been chosen as the primary tritium supply, selection of no action for the TEF would result in the inability to extract tritium from the irradiated TPBARs because an APT (with extraction capabilities) would not be built. In that case, DOE would not be able to fulfill the purpose and need for the proposed action. Such a decision would be inconsistent with the December 5, 1995 ROD for the Tritium Supply Programmatic EIS, as well as the programmatic decision documented in this Consolidated ROD. Based on the supplemental Tritium Supply and Recycling ROD, the no-action alternative for tritium extraction is unreasonable and is not further discussed in this portion of the Consolidated ROD.

B. Non-Environmental Comparison of Alternatives

1. Cost and Technical Factors

Cost

The life cycle cost estimate for the TEF at the preferred alternative (H-Area) is $920 million compared to the AGNS facility upgrades which is $1085 million. Both estimates are in constant FY 1999 dollars. Because of its close proximity to other tritium facilities in H-Area, the H-Area alternative for TEF enables the sharing of common support facilities, services, and some personnel; to facilitate the transfer of tritium between the two facilities; and to use certain gas-handling processes located in H-Area. Consequently the life-cycle cost of operating the TEF at this location is less than AGNS. The AGNS estimate exceeds the TEF estimate due to the added cost of logistics in moving the tritium containing gases from the AGNS location to the H-Area location for final processing and loading and the additional gas processing equipment needed at the AGNS location.

Conclusion: Locating the TEF in the H-Area would have a lower life-cycle cost than locating it at AGNS.

Technical

Several technical aspects were considered in evaluating the alternatives. For the AGNS facility, these technical aspects included: construction of several new buildings to house the gas processing equipment needed (existing facilities were not large enough to house the needed gloveboxes), installation of a drying oven to remove moisture from TPBARs wetted during underwater cask unloading, the addition of a waste processing facility, and an overhaul of the AGNS ventilation system to facilitate the tritium gas processing requirements. Technical factors involving the location of the preferred alternative are: (1) To share common support facilities, services, and some personnel; (2) to facilitate the transfer of tritium between the two facilities; and (3) to use certain gas-handling processes located in H Area.

The design basis of the Tritium Extraction Facility (TEF) requires that tritium-containing gasses be supplied to the existing Tritium Loading Facility (Building 233–H). Extracted gasses would not be isotopically separated at TEF but would utilize existing equipment in Building 233–H for separation of the hydrogen isotopes. In addition, the TEF would not be designed to separate hydrogen and non-hydrogen isotopes. The cost savings to the TEF project by not including this separation equipment is approximately $50 million. If the TEF were built at the AGNS facility, the TEF would have to include all of the necessary separation equipment as well as the infrastructure required for the facility (electrical, waste water, fire protection, staffing, etc.). The hydrogen isotopic separation equipment would need to ''purify'' the extracted tritium-containing gasses prior to loading on a hydride bed for transporting to the 233–H facility. Additionally, utilization of AGNS would require the unloading of shipping casks underwater which in turn would require the addition of a drying area for the TPBARs prior to extraction. The introduction of water in or around a tritium source greatly increases the hazard to operations personnel in the form of tritium oxide, which is 10,000 times more hazardous to humans than elemental tritium. However, collective doses to the population are expected to equal those of the H-Area alternative.

Conclusion: The ability of the preferred alternative to deliver gas directly to the 233–H facility offers several technical advantages over the AGNS alternative.

C. Comparison of Environmental Impacts of TEF Alternatives

In general DOE considers the expected impacts on the physical, biological, and human environment for both reasonable alternatives to be minor and consistent with what might be expected for an industrial facility. In the comparison of impacts, DOE determined that changes from current site environmental conditions of less than 5 percent are within the margin of error and the conservatism inherent in the analyses. Therefore, DOE finds that in those instances there would be no measurable change from current environmental conditions. As documented in the TEF Final EIS, overall, there are not expected to be any significant differences in environmental impacts between the two reasonable alternatives. Except for the no-action alternative, the construction and operating impacts of the TEF would be added to the impacts of the CLWR alternatives discussed in Section III above.

1. Construction Impacts

Minor differences between the alternatives are expected due to construction. Because much of the AGNS alternative involves internal modifications to an existing facility, less land would be disturbed and less construction waste generated. However, because the land at H-Area is already a densely developed, industrial area, impacts associated with land disturbance are not a significant factor. With respect to construction waste volumes, potential impacts to SRS waste treatment, storage, and disposal facilities would be small for both alternatives because of the low volumes of waste to be generated. At the AGNS site, construction noise and activity could have localized adverse effects on wildlife; however, this is not expected to be significant. Impacts associated with socioeconomics would be similar as each alternative would have a 5-year construction duration and a similar peak workforce (740 for H-Area, 685 for AGNS). While the creation of these jobs would have a positive stabilizing effect on the SRS employment, the overall impact would be minor since either alternative would change the regional employment by less than one-half of one percent.

Conclusion: Although the environmental impacts associated with construction are considered small for both alternatives, the AGNS alternative would have a smaller construction impact.

2. Operating Impacts

Operation of the TEF at H-Area or at AGNS could cause impacts in the following areas: human health (normal operations and accidents); waste generation; and socioeconomics. These areas are discussed below:

Human Health

A primary difference between the preferred alternative at H-Area and the alternative at AGNS is AGNS's proximity to non-government land, and therefore, its greater potential for impacting offsite individuals due to releases near the site boundary. Additional differences include stack height and radionuclides released to the environment. The quantities released at AGNS would differ from those emitted at H-Area because each rod would have to be cut three times in order to fit in the AGNS furnace, while full-height TPBARs would be punctured at H-Area. While processing CLWR TPBARs, the contributions of nonradiological air constituents at AGNS would be 0.13 percent of the applicable standard, and still lower for the onsite H-Area alternative. The radiological dose for the offsite maximally exposed individual would be 0.15 millirem per year for AGNS and 0.02 millirem per year for H-Area. Both of these would be well below the regulatory annual limit of 10 millirem from airborne releases. Because of the location of AGNS, some minority or low-income communities could be disproportionately affected by radiological and nonradiological air emissions; however, such impacts are expected to be minor and within all regulatory standards. Compared to the proposed action, for the maximally exposed individual the AGNS alternative is projected to have a 0.13 millirem per year higher radiation (due to its closer proximity to the boundary) but nearly equal collective population doses.

With respect to impacts from potential accidents, the lower population density in the communities near AGNS would result in a slightly smaller collective doses from potential accidents. For each of the alternatives, the design-basis accident would yield risks to the 50-mile population of approximately 7 latent cancer fatalities every 100,000 years.

Conclusion: Although the differences between the two alternatives are not significant, the preferred alternative (H-area) would have a lower impact on human health because of its greater distance from the site boundary.

Waste Generation

Both alternatives would generate 232 cubic yards of waste annually. The potential impacts to SRS waste treatment, storage, and disposal facilities would be small because the volumes would be small relative to existing waste management capabilities.

Conclusion: There is no apparent difference between the two alternatives' generation of waste.

Socioeconomics

Because of its proximity to other tritium facilities in H-Area, the H-Area alternative for TEF facilitates the use of common support facilities, services, and some personnel. Consequently, the operations workforce for the H-Area alternative is approximately 60 percent as much as the AGNS alternative (108 versus 175). While the socioeconomic impact for each alternative is considered minor, the reduced staffing requirement for the H-Area alternative is a major factor in its reduced life-cycle cost compared to the AGNS alternative.

Conclusion: Although the AGNS alternative would provide 67 more jobs for facility operators, the difference is not significant.

3. Environmentally Preferred Alternative

As described in the TEF Final EIS, the potential impacts from the preferred alternative or the AGNS alternative on the physical, biological, and human environment would be minor and consistent with what might be expected for an industrial facility. The preferred site for TEF is within H-Area, a densely developed, industrialized area near the center of SRS, approximately 6.8 miles from the nearest (western) SRS boundary. There are four existing tritium-related facilities in the immediate vicinity of the proposed TEF site. Advantages to locating TEF within H-Area include minimal environmental impacts associated with construction and operation of the proposed TEF due to the developed nature of H-Area; availability of site infrastructure (i.e., power, steam, potable water, sewerage); and proximity to existing tritium-related facilities and processes to support TEF operations. Both the nonradiological air constituents and annual radiological dose are lower for the preferred alternative compared to the AGNS alternative. Consequently, the H-Area alternative is the environmentally preferred alternative.

D. TEF Decision

The preferred alternative, to design, construct, test, and operate a new TEF in H-Area immediately adjacent to and

west of Building 233–H, at the SRS, is selected for implementation. This alternative has the lowest life-cycle cost, has technical advantages, and is environmentally preferred.

V. Site-Specific Decision for Accelerator Production of Tritium (APT)

DOE has prepared this part of the Consolidated Record of Decision to implement that portion of the December 22, 1998 announcement designating the APT as the backup technology. It is based on the analysis from the Accelerator Production of Tritium at the Savannah River Site Final Environmental Impact Statement (DOE/EIS–0270) issued in March 1999, along with other factors such as DOE statutory mission requirements, national security policy, cost, schedule and technical risks.

A. APT Design Features and System Alternatives Considered

The EIS evaluated the no action alternative, and technology and siting alternatives relating to radiofrequency power, accelerator operating temperature, feedstock material, cooling water system, APT site, electric power supply, and APT design variations. The following section summarizes these alternatives.

1. No Action Alternative

No action for the APT is to produce tritium in a commercial light water reactor and to construct and operate a tritium extraction facility. Under the no action alternative the APT is designated the back-up technology for tritium production. As back-up, DOE would complete key research and development, and preliminary design activities for the APT at SRS (but would not construct the facility). Selection of APT technology and siting alternatives would support the research and development and preliminary design activities and facilitate implementation should construction and operation of the APT be called for in the future.

2. Radiofrequency Power Alternatives

APT would use radiofrequency waves to accelerate protons in the accelerator. Specially designed vacuum electron tubes would convert electric power to radiofrequency waves outside of the accelerator. The waves are then transported into the accelerator and used to accelerate the protons. The APT EIS evaluated two alternatives to supply the radiofrequency power for the accelerator, (1) klystron radiofrequency power tubes (DOE's preferred alternative), and (2) high order mode inductive output radiofrequency power tubes.

3. Operating Temperature Alternatives

The operating temperature affects the electrical components in the accelerator. The greater the power converted to heat the greater the amount of electricity used. If the temperature of some materials (e.g., niobium) falls to values near absolute zero (−459°F), the electrical resistance becomes essentially zero, and the component uses much less electricity. This is called superconductivity. The APT EIS evaluated two operating temperature alternatives for the accelerator: (1) operating electrical components at essentially room temperature, and (2) operating high energy accelerating structures at superconducting temperatures and the rest at room temperature (DOE's preferred alternative).

4. Feedstock Material Alternatives

The feedstock material absorbs the neutrons freed during spallation resulting in the production of a tritium atom and a byproduct atom. DOE would use the same target/blanket as the neutron source regardless of the feedstock material. The APT EIS evaluated two feedstock materials, (1) Helium-3 (DOE's preferred alternative) and (2) Lithium-6.

5. Cooling Water System Alternatives

The APT requires cooling water to keep target/blanket components, radiation shielding, beamstops and other components from overheating. DOE proposes to use a similar method for cooling each component. This is a primary coolant loop isolated from the environment through heat exchangers. Components with the potential for radioactive contamination would require a secondary loop to cool the primary loop and isolate potential contamination from the environment. The final cooling system, regardless of the number of loops, would use a cooling water system to discharge heat to the environment. The APT EIS evaluated four designs to provide the necessary cooling capacity for the APT: (1) Mechanical-draft cooling towers with makeup water from the Savannah River and discharge into pre-cooler Ponds 2 and 5 of Par Pond (DOE's preferred alternative); (2) mechanical-draft cooling towers with makeup water from groundwater wells and discharge into pre-cooler Ponds 2 and 5 of Par Pond; (3) once through cooling using Savannah River water and discharge into pre-cooler Ponds 2 and 5 of Par Pond; and (4) use the existing K-Area cooling tower with Savannah River water makeup and discharge to Pen Branch via Indian Grave Branch. A design variation for the first three alternatives would be to discharge the heated water to the head of Pond C of Par Pond but downstream from pre-cooler Ponds 2 and 5.

6. Siting Alternatives

DOE conducted a screening process to select potentially suitable sites within the SRS for the APT. Based on a weighing and balancing of the criteria, DOE selected two sites for further analysis. The APT EIS evaluated (1) a site 3 miles northeast of the Tritium Loading Facility, and approximately 6.5 miles from the SRS boundary (DOE's preferred alternative); and (2) a site 2 miles northwest of the Tritium Loading Facility, and approximately 4 miles from the SRS boundary.

7. Electric Power Supply Alternatives

APT requires large amounts of electricity to operate. Therefore, DOE evaluated two alternatives for the source of electricity for the APT: (1) Obtain electricity from existing commercial capacity and through market transactions (DOE's preferred alternative); (2) obtain electricity from the construction and operation of a new coal-fired or a natural-gas-fired generating plant.

8. APT Design Variations

In addition to the cooling water discharge design variation described above, the APT EIS evaluated two other variations. The first is a modular, or staged, accelerator configuration. It would use the same accelerator architecture as the baseline but could be constructed in stages. An initial stage would produce less tritium than the baseline APT but would be capable of producing as much tritium as the baseline APT with the addition of a second stage.

The second variation would combine tritium separation and tritium extraction facilities to take advantage of common process systems and would be capable of handling both Helium-3 and Lithium-6 feedstock material.

B. Non-Environmental Comparison of APT Design Features and System Alternatives

Technical comparisons are presented for each set of alternatives described above. These are based on various studies completed for each alternative.

1. Technology Factors

Radiofrequency Power

The klystron is an established technology that has been used for years. Thus, this technology has proven reliability and presents no technical challenges to its use in the APT. The inductive output tube has several commercial applications, but additional design and prototyping is needed to demonstrate the applicability to APT. These demonstration tests are scheduled for completion this spring. The inductive output tubes have a greater efficiency in converting DC power to RF power which would reduce power requirements by 15 percent. The inductive output tube also uses one half of the voltage resulting in reduced shielding requirements.

Conclusion: The preferred alternative of klystron power tubes would be used as the basis for the preliminary design. The inductive output tube offers technical advantages and reduces operating costs (less electricity used) and capital costs (less shielding needed). The continued development is justified to achieve these benefits.

Operating Temperature

The room temperature accelerator technology is based on technology demonstrated at the Los Alamos National Laboratory. The accelerator cavities are cooled by the primary water cooling system. As part of the accelerating structures the cavity lengths would increase in size in proportion to the increasing proton velocity. This results in greater complexity of maintenance because each cavity is unique.

The superconducting technology uses two sizes of cavities which are cooled with liquid helium to almost absolute zero. This cooling method eliminates the need for water cooling in the superconducting cavities. The two different sizes of cavities allows for simplified maintenance. The engineering development and demonstration program has completed the design and prototyping of these cavities.

Conclusion: The superconducting cavities allow for easier accelerator maintenance. Experience has shown that liquid helium distribution systems are less prone to leakage than water systems.

Feedstock Materials

Helium-3 is a nonradioactive gas that exists naturally in small quantities and is produced through the radioactive decay of tritium. The helium-3 is contained in tubes within the target/blanket. The helium-3 would absorb neutrons which converts it to tritium and hydrogen The helium-3 and tritium mixture would be continuously or semi-continuously transported via piping to the Tritium Separation Facility. The helium-3 purified in the separations process is returned to the target/blanket to produce additional tritium. This results in reduced inventories of tritium in the target/blanket and prevention of pollution since the helium-3 is recycled. The production of tritium can also be varied through controlling the number of neutrons but without sacrificing continuous separation.

Lithium-6 would be in the form of rods that would be placed in the blanket area. These rods would be similar to the rods DOE used when it operated the SRS tritium production reactors. Because the lithium-6 is incorporated into solid rods, batch production of tritium is required resulting in a higher inventory of tritium in the target/blanket than the helium-3 alternative. Also the rods could not be recycled.

Conclusion: The improved safety factors from reduced inventory of tritium in the helium-3 alternative along with the ability to recycle the helium-3 provides advantages for the helium-3 alternative. The added flexibility of varying production rates also makes the helium-3 alternative attractive.

Cooling Water System

The cooling water system alternatives were evaluated using three evaluation criteria, capital cost, life cycle cost, and permitting risk. The mechanical draft cooling tower with river water makeup was rated the lowest capital cost, the lowest life cycle cost, and the least risk associated with obtaining permits. The evaluation of risks associated with permits is based on the scope of changes to existing systems that would require regulatory reviews as well as the temperature of the blowdown water compared to the threshold limit. This evaluation placed the mechanical draft cooling tower with river water makeup as the best alternative. The mechanical draft cooling tower with ground water makeup was ranked second, once through cooling was third and the use of K–Area cooling tower was fourth. A separate evaluation for the design variation of discharge to Pond C of Par Pond was also completed. This evaluation showed a reduction in costs due to avoidance of costs associated with upgrades to the pre-cooler ponds.

Conclusion: The mechanical draft cooling tower with river water makeup was evaluated as the best alternative based on capital cost, life-cycle cost, and permitting risk criteria. The design variation of discharging to Pond C of Par Pond added the benefit of reducing costs.

Siting

The two sites evaluated in the EIS, a site 3 miles northeast of the Tritium Loading Facility (northeast site), and a site 2 miles northwest of the Tritium Loading Facility (northwest site), were similar in most characteristics. No differences in engineering factors were identified in the Site Selection Study (WSRC-TR–96–0279). The ranking factors where there is a difference between the two sites were in ecology, where the northeast site was better; depth to groundwater, where the northwest site was better; and buffer distance to the public off-site, where the northeast site was better.

Conclusion: Due to increased buffer distance which would reduce public radiological exposure in the case of an incident, the northeast site is a better location.

Electrical Supply

The two alternatives evaluated present different technical and financial challenges. The alternative to construct a new dedicated coal or gas fired plant would probably require both contractual and financial guarantees by DOE to the utility providing the electricity. Prior to a utility constructing a plant, the DOE would need to enter a long-term power purchase agreement to provide assurance to the utility that it would have a market for the output of the plant. The contractual arrangement would therefore entail take-or-pay obligations on the part of DOE for an amount of time necessary for growth in system demand to absorb the generating capacity constructed.

In the alternative of relying on existing capacity and contracting for power purchased on the market, the take-or-pay and/or notice-of-termination provisions associated with a dedicated plant can be minimized or entirely avoided. Shorter term retail sales contracts (2 to 5 years) can be accommodated which would permit the DOE to periodically recompete the APT purchase arrangements. This would also allow DOE to take advantage of renewable energy opportunities that could become available in the future.

The electric power industry is presently subject to significant and widespread changes, with approximately 40 states presently addressing the issue of restructuring the retail power market to permit competition among suppliers. A long-term power supply contract tied to the construction of a dedicated generating

facility would eliminate DOE's flexibility in taking advantage of changes in the power supply market over the life of the plant.

Conclusion: The alternative of purchasing power from the electric grid through market transaction provides DOE with greater long-term flexibility and avoids the need to commit to a long-term contract for power.

Modular Design

The modular design was developed to provide tritium production flexibility in the face of changing stockpile requirements, and to optimize the project costs and funding profile. Several different modular designs were evaluated using cost and schedule, technical and programmatic risk, and the potential for future upgrades as general criteria. The preferred design meets current requirements, but allows for a delay in the decision to construct an APT that meets Start I requirements for several years, while avoiding the commitment to the cost of a START I sized facility.

Conclusion: The modular design provides the DOE with enhanced flexibility to only commit to an APT sized to meet requirements in several years.

C. Comparison of Environmental Impacts of APT Alternatives

The APT EIS presents an evaluation of environmental impacts for the combination of the preferred alternatives identified above, and the differences found for each of the alternatives. This summary presents the same format for comparison of the environmental impacts.

1. Construction Impacts for the Preferred Technology and Site Alternatives

APT would require conversion of approximately 250 acres of land from forest to industrial uses. This land would be graded or leveled during construction. Additional roads, bridge upgrades, rail lines, and utility upgrades would be required. No geologically significant formations or surface faults occur on the site. Soils on the site are not classified as significant. The change in land use would have no marked reduction in plant and animal abundance or diversity. There are no impacts to wetlands or threatened or endangered species.

Impact to surface waters are negligible, however, dewatering of the construction site could result in short-term increases in solids to receiving water bodies. Impacts to aquatic organisms in Upper Three Runs and tributaries would be minor due to the use of soil and erosion control measures.

Air emissions would be negligible at the site, and purchases of electricity would be dispersed. There are no radiological emissions during construction. Visual impacts would be negligible. Noise, primarily from construction equipment is not audible at the SRS boundary, however, construction workers could encounter noise levels that would require administrative controls or protective equipment.

APT would generate hazardous solid waste and sanitary solid and liquid waste. These would be deposited at SRS, and would require some landfill construction. Estimated annual volumes of waste are 560 cubic meters of sanitary solid waste, 30,000 cubic meters of construction debris, and 3.6 million gallons of industrial wastewater.

Impacts to public health during construction would be negligible because concentrations of non-radiological constituents are below applicable limits. Increased traffic would result in a small increase in traffic fatalities. Occupational injuries are not expected to be different than those occurring on any large construction site.

The work force required for construction is estimated to peak at 1,400 jobs. This would not result in large regional impacts.

2. Operational Impacts for the Preferred Technology and Site Alternatives

No impacts would occur to landforms, soils, hydrology or geology during operations. No dewatering is required for operations. Electrical use is estimated at 3.1 terawatt-hours per year. Negligible impacts to terrestrial ecology and threatened and endangered species are expected. Mechanical draft cooling towers would result in salt deposition on vegetation, however, maximum levels are below threshold levels. Operations would result in minor impacts to wetlands due to marginally higher temperature of blowdown water.

Blowdown rates of approximately 2,000 gallons per minute would cause negligible impact on surface water levels. Using Par Pond and pre-cooler ponds as discharge points for cooling water, temperatures would not exceed 90 degrees F. Contaminated sediments could be resuspended, resulting in negligible additional fatal cancers from exposure to the public. Impingement and entrainment from intake of river water would not substantially affect Savannah River fisheries. Solids in blowdown water would have no impact on aquatic ecology. Discharge temperatures would only have small localized effects on aquatic communities.

Non-radiological air emissions would be well within the applicable regulatory standards. Radioactive airborne emissions would result in expected latent cancer fatalities of 0.0008 annually. There would be negligible impacts to visual resources, with plumes visible under certain meteorological conditions. Noise generated by equipment and traffic would not be audible at the SRS boundary.

APT operations would generate solid and liquid wastes but no high-level or transuranic waste; waste volumes would have a negligible impact on the capacities of waste facilities. The generation of electricity would produce various types of waste including fly ash, bottom ash, and scrubber sludge. Estimated annual amounts of waste generated are 1,800 metric tons of sanitary solid waste, 3,800 metric tons of industrial waste, 140,000 gallons of radioactive wastewater, 3.3 million gallons of sanitary wastewater, 920 million gallons of non-radioactive process wastewater, 1,400 cubic meters of low-level radioactive waste, 3 cubic meters of high concentration radioactivity low-level radioactive waste, and 12 cubic meters of high concentration radioactivity mixed waste.

The public would receive source radiation exposure from APT emissions and transportation of radioactive material. Workers would receive radiation exposure from facility operations and transportation of radioactive material and from electromagnetic fields. These would result in an annual risk of 0.0016 latent cancer fatalities. There would be negligible consequences from accidents with a frequency of less than once in the operating lifetime of the facility.

The operational work force would be approximately 500. This would not result in large regional impacts. No adverse impacts on minority or low-income populations are expected.

3. Environmental Impacts of Alternatives

Radiofrequency Power Alternative—Inductive Output Tubes

This alternative would have no change in estimated impacts from the preferred alternative for construction impacts. The only change in operational impacts from the preferred alternative is in impacts to surface waters. The

inductive output tube would require 7 percent less cooling water.

Operating Temperature Alternative—Operating Electrical Components at Room Temperature

This alternative would have no changes in the estimated construction impacts as described for the preferred alternative, except that 100 fewer construction jobs are estimated, resulting in lower regional community impact; there would be a 9 percent reduction in sanitary waste generated; and there would be a 6 percent reduction in occupational injuries. During operations electricity usage is estimated to be 23 percent higher, and 37 percent more non-radioactive waste water would be generated.

Feedstock Material Alternative—Lithium-6

This alternative would have no changes in the estimated construction impacts as described for the preferred alternative. For operations, the impacts would be similar to the preferred alternative except for slightly increased doses from airborne radiological emissions which would slightly increase the latent cancer fatalities. Also, eight percent more low-level radioactive waste, and 25 percent more high concentration mixed waste would be generated. A minor decrease in radiological doses from accidents with low probability of occurrence would also occur.

Cooling Water System Alternative—Once-Through Using River Water as Makeup

This alternative would have no changes in the estimated construction impacts as described for the preferred alternative. Impacts from operations would also be similar, except blowdown rates of 125,000 gallons per minute (a 2,000 percent increase) would result in higher temperatures to receiving bodies of water and would adversely affect aquatic communities. Also an increase of 1.5 feet in the water levels of the pre-cooler ponds would possibly affect wetland communities. Impingement of 2,600 fish, and entrainment of 3.4 million fish eggs and 6.4 million larvae annually would occur. Resuspension caused by the increased flows would result in slightly increased doses. Latent cancer fatalities would increase from 0.0016 to 0.0017 annually. No mechanical-draft cooling tower noise would be heard at the APT site, but pump noise would be occasionally audible to river traffic. No salt deposition would occur.

Cooling Water System Alternatives—Mechanical Draft Cooling Towers Using Groundwater Makeup

This alternative would have no changes in the estimated construction impacts as described for the preferred alternative. Impacts from operations would also be similar except the removal of 6,000 gallons per minute on a sustained basis could impact groundwater flow to streams and compact clay layers. No impingement and entrainment would occur.

Cooling Water System Design Variation—Discharge to Pond C Avoiding the Pre-cooler Ponds

This design variation applies to the preferred alternative and the two cooling water system alternatives above. This variation would have no changes in the estimated construction impacts as described for the preferred alternative. The operational impacts would be similar to the preferred alternative, except that impacts to the pre-cooler ponds are eliminated, and there would be a minor increase in heated water impacts to Pond C.

Cooling Water System Alternatives—K-Area Cooling Tower Using River Water as Makeup

This alternative would have no changes in the estimated construction impacts as described for the preferred alternative except the wastewater discharges would go to Pen Branch via Indian Grave Branch. The water levels in the upper reaches of the stream system would be raised. Additional cooling water piping to the K-Area would also be needed. The plume from K-Area cooling tower would likely be more visible. There would be no mechanical-draft cooling tower noise at the APT site, but pump and cooling tower noise in the K-Area would increase.

Site Location Alternative—2 Miles Northwest of Tritium Loading Facility

This alternative would have no changes in the estimated construction impacts as described for the preferred alternative except the water table is deeper and would require less dewatering. Also traffic fatalities during construction would be twenty percent less. Changes in operational impacts from the preferred alternative are higher doses due to closer distance to the SRS boundary. The dose from all sources would increase latent cancer fatalities from 0.0016 to 0.0017 annually.

Electric Power Supply Alternative—Construct New Plant

The impacts of a new plant would be dependent on the specific location. A new coal facility would require 290 acres and a natural gas facility 110 acres. The types of impacts presented for the preferred alternative would also occur at the specific site for a new plant. Increased amounts of construction waste would be generated. Construction would require a peak work force of 1,100. Plant operations would require an additional 200 jobs.

Design Variations—Modular Design

This variation would have no changes in the estimated construction impacts as described for the preferred alternative except construction wastes, health impacts, and peak employment all would be 10 percent lower. Operational impacts would also be similar with the following exceptions. Both blowdown water rates and non-radiological air emissions would be 10 percent lower. Electricity usage would be 2.0 terawatt-hours per year, a 32 percent decrease. Wastes from operations would be 10 percent lower.

Design Variation—Combining Tritium Separation and Extraction Facilities

This variation would have no changes in the estimated construction impacts as described for the preferred alternative. Operational impact differences would result in an increase in doses from airborne emissions from 0.0008 latent cancer fatalities to 0.0009.

No Action Alternative

For the APT, no action is to not build the APT, but use the CLWR as a source of tritium. Since the APT would not be built or operated there would be no change in the existing environment at SRS.

4. Overall Environmental Conclusion

As described above, and as documented in the environmental analyses that have been developed, it is expected that the overall environmental impacts associated with tritium production in an APT would be small. Consequently, the environmental impacts associated with the APT alternatives and design variations are not considered major discriminating factors in the decision. Based on all of the environmental factors considered, the no action alternative is the environmentally preferred alternative.

D. APT Decision

DOE selects the APT as the backup tritium supply technology. DOE will complete preliminary design for the

APT facility. To focus this design effort DOE has made the following selections for the different sets of alternatives and design variations described and analyzed above and in the engineering and environmental documents.

1. Radiofrequency Power

The preferred alternative of klystron power tubes would be used as the basis for the preliminary design because the inductive output tube design is still in development. The DOE would, however, continue with development of the inductive output tube. If at a future date, the development of the inductive output tube advances and the APT design is activated as a source of tritium, the inductive output tube may be substituted for the klystron power tubes.

The klystron power tube uses additional electricity, but otherwise, the environmental impacts are similar for the two alternatives. From a technology and cost perspective, the inductive output tubes have a lower cost because they are smaller, more efficient and operate at lower voltage.

2. Operating Temperature

The alternative of using superconducting components is selected as the preferred alternative for specific higher power sections of the accelerator. The use of superconducting components would have:

- Reduced electricity demands resulting in lower environmental impacts.
- Greater safety margin due to less chance for activation of the accelerating structures and cooling system that reduces the number of pipe penetrations into the accelerator.
- Only two cavity sizes allowing for simpler design and maintenance.

3. Feedstock Material

The alternative using helium-3 as a feedstock material is selected as the preferred alternative for production of tritium. The use of helium-3 as a feedstock material would have:

- The least environmental impact.
- Greater flexibility in extracting the tritium on a semi-continuous basis.
- Greater safety margin because the inventory of tritium in the target blanket and separations facilities is less.

4. Cooling Water System

The alternative of mechanical-draft cooling towers with makeup water from the Savannah River is selected as the preferred alternative for the cooling system. The design variation of discharging to the head of Pond C, but downstream from the pre-cooler ponds, is also selected. This alternative is selected because it:

- Has the least environmental impacts.
- Avoids additional costs to upgrade the pre-cooler ponds.

5. Siting

The site 3 miles northeast of the Tritium Loading Facility is selected as the preferred APT site. This site is selected because it results in:

- Greater buffer distance which would reduce public radiological exposure in case of an incident.
- Less impact to terrestrial and aquatic ecology.

6. Electric Power Supply

The alternative of obtaining electricity from the existing commercial capacity and through market transactions is selected as the preferred alternative for electrical power supply. The alternative is selected because:

- It presents the least environmental impact.
- It provides the greatest flexibility in reducing costs through using market mechanisms to obtain bulk wholesale costs.
- It provides opportunities to use alternative supplies of power.

7. Modular Design Variation

The modular design is selected as the preferred design for the APT because it:

- Provides capacity and cost flexibility in meeting changing tritium requirements.

8. Combine Tritium Separation and Tritium Extraction

This design variation is not selected since the APT was not selected as the primary tritium source. Since the CLWR was selected as the primary source, a Tritium Extraction Facility must be built to support this decision.

VI. Consolidated Tritium Supply and Recycling Decision

The Department of Energy will produce new tritium for national security purposes on a schedule and at a rate to meet the requirements of the President's Nuclear Weapons Stockpile Plan. Tritium will be produced by irradiating DOE-supplied tritium-producing rods in commercial light water reactors, specifically the Tennessee Valley Authority's currently operating Watts Bar Unit 1, Sequoyah Unit 1, and/or Sequoyah Unit 2 reactors. To support this method of tritium production, a new Tritium Extraction Facility will be designed and constructed in the H-Area of DOE's Savannah River Site.

The Accelerator Production of Tritium technology will be developed as the backup tritium supply. Engineering development and demonstration, preliminary design, and detailed design of key elements of the system will be completed to permit expeditious initiation of accelerator facility construction at the preferred location on the Savannah River Site should it be needed.

The Fast Flux Test Facility will have no role in tritium production.

Signed this 6th day of May 1999.

Bill Richardson,

Secretary of Energy.

[FR Doc. 99–12019 Filed 5–13–99; 8:45 am]

BILLING CODE 6450–01–P

DEPARTMENT OF ENERGY

[FE Docket Nos. 99–22–NG, et al.]

Cascade Natural Gas Corporation, et al., Orders Granting, Amending, and Vacating Authorizations To Import and Export Natural Gas, Including Liquefied Natural Gas

AGENCY: Office of Fossil Energy, DOE.

ACTION: Notice of orders.

SUMMARY: The Office of Fossil Energy (FE) of the Department of Energy gives notice that it has issued Orders granting, amending, and vacating natural gas, including liquefied natural gas, import and export authorizations. These Orders are summarized in the attached appendix.

These Orders may be found on the FE web site at http://www.fe.doe.gov., or on the electronic bulletin board at (202) 586–7853.

They are also available for inspection and copying in the Office of Natural Gas & Petroleum Import & Export Activities, Docket Room 3E–033, Forrestal Building, 1000 Independence Avenue, S.W., Washington, D.C. 20585, (202) 586–9478. The Docket Room is open between the hours of 8:00 a.m. and 4:30 p.m., Monday through Friday, except Federal holidays.

Issued in Washington, D.C., on May 6, 1999.

John W. Glynn,

Manager, Natural Gas Regulation, Office of Natural Gas & Petroleum Import & Export Activities, Office of Fossil Energy.

Attachment

APPENDIX—ORDERS GRANTING, AMENDING AND VACATING IMPORT/EXPORT AUTHORIZATIONS

[DOE/FE Authority]

Order No.	Date issued	Importer/Exporter FE Docket No.	Import volume	Export volume	Comments
1474	04/06/99	Cascade Natural Gas Corporation 99–22–NG.	25,000 MMBtu/per day and 15,000 MMBtu/per day.		Import specific volumes from Canada for the period of November 1, 1998, through March 31, 1999, and import specific volumes from Canada for the period of April 1, 1999, through October 31, 1999.
1475	04/08/99	Sumas Energy 2, Inc. 99–24–NG.	82.8 Bcf		Import from Canada beginning on the date of first delivery.
1476	04/13/99	Enserch Energy Services, Inc. 99–25–NG.	120 Bcf		Import and export a combined total from and to Canada and Mexico beginning July 27, 1999, and extending through July 26, 2001.
1477	04/20/99	Wisconsin Electric Power Company 99–23–NG.	14 Bcf		Import from Canada beginning January 1, 1999, and ending on December 31, 2000.
1206–A	04/20/99	ProGas U.S.A., Inc. 96–65–NG.			Amendment to long-term import by increasing volumes from 16,402 Mcf per day to 29,365 Mcf per day for the period June 1, 1999, through October 31, 2006. From November 1, 2006, through October 31, 2007, the import volumes will revert back to the 16,402 Mcf per day.
1197–B	04/20/99	ProGas U.S.A., Inc. 96–60–NG.			Amendment to long-term to increase import volumes from 2,309 Mcf per day up to 2,563 Mcf per day for the period of June 1, 1999, through October 31, 2012.
1478	04/22/99	International Gas Imports, L.L.C. 99–28–LNG.	300 Bcf		Import liquefied natural gas from various sources beginning on the acquisition of first shipment.
492–B	04/20/99	Fulton Cogeneration Associates 90–34–NG.			Vacate long-term import authority.

[FR Doc. 99–12251 Filed 5–13–99; 8:45 am]
BILLING CODE 6450–01–P

DEPARTMENT OF ENERGY

Energy Information Administration

Agency Information Collection Activities: Proposed Collection; Comment Request

AGENCY: Energy Information Administration, DOE.

ACTION: Agency information collection activities: Proposed collection; comment request.

SUMMARY: The Energy Information Administration (EIA) is soliciting comments on the proposed revision and extension to the Form EIA–28, ''Financial Reporting System (FRS).''

DATES: Written comments must be submitted on or before July 13, 1999. If you anticipate difficulty in submitting comments within that period, contact the person identified below as soon as possible.

ADDRESSES: Send comments to Gregory P. Filas, Energy Information Administration (EI–62), Financial Analysis Team, Forrestal Building, U.S. Department of Energy, Washington, DC 20585. Alternately, Mr. Filas may be contacted by telephone (202) 586–1347; e-mail greg.filas@eia.doe.gov; or FAX (202) 586–9753.

FOR FURTHER INFORMATION CONTACT: Requests for additional information or copies of the form and instructions should be directed to Mr. Filas at the address listed above.

SUPPLEMENTARY INFORMATION:

I. Background
II. Current Actions
III. Request for Comments

I. Background

The Federal Energy Administration Act of 1974 (Pub. L. No. 93–275, 15 U.S.C. 761 *et seq.*) and the Department of Energy Organization Act (Pub. L. No. 95–91, 42 U.S.C. 7101 *et seq.*) require the Energy Information Administration (EIA) to carry out a centralized, comprehensive, and unified energy information program. This program collects, evaluates, assembles, analyzes, and disseminates information on energy resource reserves, production, demand, technology, and related economic and statistical information. This information is used to assess the adequacy of energy resources to meet near and longer term domestic demands.

The EIA, as part of its effort to comply with the Paperwork Reduction Act of 1995 (Pub. L. 104–13, 44 U.S.C. Chapter 35), provides the general public and other Federal agencies with opportunities to comment on collections of energy information conducted by or in conjunction with the EIA. Any comments received help the EIA to prepare data requests that maximize the utility of the information collected, and to assess the impact of collection requirements on the public. Also, the EIA will later seek approval by the Office of Management and Budget (OMB) of the collections under Section 3507(h) of the Paperwork Reduction Act of 1995.

Under Pub. L. 95–91, section 205(h), the Administrator of the EIA is required to ''identify and designate'' the major energy companies who must annually

file Form EIA–28 to ensure that the data collected provide ''a statistically accurate profile of each line of commerce in the energy industry in the United States.'' Data collected on Form EIA–28 are published and used in analyses of the energy industry.

II. Current Actions

EIA is proposing to revise the Form EIA–28 as well as to request OMB approval to use the revised form through December 31, 2002. To reduce the burden on respondent companies, EIA is proposing to discontinue collecting detailed data for completed oil, gas, and dry wells. This information is currently collected on Form EIA–28, Schedule 5211. Historically, this detailed data have some reporting problems requiring significant EIA follow-up. After reviewing the need for these data, EIA has decided to discontinue collecting the information and to use information available from the private sector.

There are an increasing number of FRS companies that have upstream oil and gas unconsolidated affiliates that do not meet the criterion of 1 percent of total U.S. oil and gas for inclusion in the FRS survey. As a consequence, coverage of important upstream operational activities in oil and gas is deteriorating and the usefulness of the FRS data are declining. EIA is proposing to modify the EIA–28 such that if a company currently reports oil and gas reserves disclosure data in the aggregate for its unconsolidated affiliates, the company will be required to report a subset of the EIA–28 data disaggregated by FRS region. The requested data for unconsolidated affiliates will be: (1) All upstream activity contained in Schedule 5211; (2) production segment purchases and sales in Schedule 5212; (3) all exploration, development, and production statistics in Schedule 5241; and (4) all proved petroleum reserves statistics in Schedule 5246.

III. Request for Comments

Prospective respondents and other interested persons are invited to comment on the actions discussed in item II. The following guidelines are provided to assist in the preparation of comments.

General Issues

A. Is the proposed collection of information necessary for the proper performance of the functions of the agency and does the information have practical utility? Practical utility is defined as the actual usefulness of information to or for an agency, taking into account its accuracy, adequacy, reliability, timeliness, and the agency's ability to process the information it collects.

B. What enhancements can be made to the quality, utility, and clarity of the information to be collected?

As a Potential Respondent

A. Are the instructions and definitions clear and sufficient? If not, which instructions require clarification?

B. Can information be submitted by the due date?

C. Public reporting burden for this collection is estimated to average 500 hours per response. The estimated burden includes the total time, effort, or financial resources expended to generate, maintain, retain, disclose and provide the information.

Please comment on (1) the accuracy of the agency's estimate and (2) how the agency could minimize the burden of collecting this information, including the use of information technology.

D. The agency estimates respondents will incur no additional costs for reporting other than the hours required to complete the collection. What is the estimated: (1) Total dollar amount annualized for capital and start-up costs; and (2) recurring annual costs of operation and maintenance, and purchase of services associated with this data collection?

E. Does any other Federal, State, or local agency collect similar information? If so, specify the agency, the data element(s), and the method(s) of collection.

As a Potential User

A. Is the information useful at the levels of detail indicated on the form?

B. For what purpose(s) would the information be used? Be specific.

C. Are there alternate sources for the information and are they useful? If so, what are their deficiencies and/or strengths?

Comments submitted in response to this notice will be summarized and/or included in the request for OMB approval of the form. They also will become a matter of public record.

Authority: Section 3506 (c)(2)(A) of the Paperwork Reduction Act of 1995 (Pub. L. No. 104–13, 44 U.S.C. Chapter 35).

Issued in Washington, D.C. May 10, 1999.

Jay H. Casselberry,

Agency Clearance Officer, Statistics and Methods Group, Energy Information Administration.

[FR Doc. 99–12252 Filed 5–13–99; 8:45 am]

BILLING CODE 6450–01–P

DEPARTMENT OF ENERGY

Federal Energy Regulatory Commission

[Docket No. CP99–516–000]

ANR Pipeline Company; Notice of Request Under Blanket Authorization

May 10, 1999.

Take notice that on May 6, 1999, ANR Pipeline Company (ANR), 500 Renaissance Center, Detroit, Michigan 48243, filed in Docket No. CP99–516–000 a request pursuant to Sections 157,205(b) and 157.211 of the Commission's regulations for authorization to construct and operate pursuant to Section 7(c) of the Natural Gas Act, an interconnection between ANR and Alliant Energy—Wisconsin Power & Light Co. (Alliant Energy) in Rock County, Wisconsin, all as more fully set forth in the application which is on file with the Commission and open to public inspection. This filing may be viewed on the web at http://www.ferc.fed.us/online/rims.htm (call 202–208–2222 for assistance).

ANR's proposed interconnection will consist of two (2) 8-inch turbine meters, one (1) 4-inch turbine meter, and one (1) 2-inch positive displacement meter. The total cost of ANR's facilities will be approximately $788,000, which will be fully reimbursed by Alliant Energy.

Any person or the Commission's Staff may, within 45 days after issuance of the instant notice by the Commission, file pursuant to Rule 214 of the Commission's Procedural Rules (18 CFR 385.214) a motion to intervene or notice of intervention and pursuant to § 157.205 of the regulations under the Natural Gas Act (18 CFR 157.205) a protest to the request. If no protest is filed within the time allowed therefor, the proposed activity shall be deemed to be authorized effective the day after the time allowed for filing a protest. If a protest is filed and not withdrawn within 30 days after the time allowed for filing a protest, the instant request shall be treated as an application for authorization pursuant to Section 7 of the Natural Gas Act.

David P. Boergers,

Secretary.

[FR Doc. 99–12191 Filed 5–13–99; 8:45 am]

BILLING CODE 6717–01–M

DEPARTMENT OF ENERGY

Federal Energy Regulatory Commission

[Docket No. CP99–453–000]

Northwest Pipeline Corporation; Notice of Request Under Blanket Authorization

May 10, 1999.

Take notice that on May 3, 1999, Northwest Pipeline Corporation (Northwest), 295 Chipeta Way, Salt Lake City, Utah 84108, filed in Docket No. CP99–453–000 a request pursuant to sections 157.205, 157.211 and 157.216 of the Commission's Regulations under the Natural Gas Act (18 CFR 157.205, 157.211 and 157.216) for approval to abandon obsolete facilities at the Pinehurst Meter Station in Shoshone County, Idaho, and to construct and operate modified replacement facilities at this station to better accommodate existing firm delivery obligations under authorized transportation agreements with Avista Corporation, under Northwest's blanket certificate issued in Docket No. CP82–433–000 pursuant to Section 7 of the Natural Gas Act, all as more fully set forth in the request that is on file with the Commission and open to public inspection. The application may be viewed on the web at http://www.ferc.fed.us/online/rims.htm (call (202) 208–2222 for assistance).

Northwest proposes to modify the Pinehurst Meter Station by removing a 4-inch positive displacement meter and appurtenances and installing a 2-inch rotary meter and appurtenances. Northwest states that the maximum design delivery capacity of the meter station will increase from 468 Dth per day to approximately 648 Dth per day at 150 psig. The total cost of the proposed facility replacements at the Pinehurst Meter Station is estimated to be approximately $65,200.

Any person or the Commission's staff may, within 45 days after issuance of the instant notice by the Commission, file pursuant to rule 214 of the Commission's Procedural Rules (18 CFR 385.214) a motion to intervene or notice of intervention and pursuant to § 157.205 of the Regulations under the Natural Gas Act (18 CFR 157.205) a protest to the request. If no protest is filed within the time allowed therefor, the proposed activity shall be deemed to be authorized effective the day after the time allowed for filing a protest. If a protest is filed and not withdrawn within 30 days after the time allowed for filing a protest, the instant request shall be treated as an application for authorization pursuant to section 7 of the Natural Gas Act.

David P. Boergers,

Secretary.

[FR Doc. 99–12190 Filed 5–13–99; 8:45 am]

BILLING CODE 6717–01–M

DEPARTMENT OF ENERGY

Federal Energy Regulatory Commission

[Docket No. CP99–462–000]

Tennessee Gas Pipeline Company; Notice of Request Under Blanket Authorization

May 10, 1999.

Take notice that on May 4, 1999, Tennessee Gas Pipeline Company (Tennessee), a Delaware corporation, P.O. Box 2511, Houston, Texas 77252, filed in Docket No. CP99–462–000 a request pursuant to Sections 157.205 and 157.216 of the Commission's Regulations under the Natural Gas Act (18 CFR 157.205 and 157.216) for authorization to abandon and remove a 2-inch side valve in Panola County, Mississippi, under Tennessee's blanket certificate issued in Docket No. CP82–413–000 pursuant to Section 7 of the Natural Gas Act, all as more fully set forth in the request that is on file with the Commission and open to public inspection. The application may be viewed on the web at http://www.ferc.fed.us/online/rims/htm. Call (202) 208–2222 for assistance.

Tennesse further states that the facilities will be removed in compliance with 18 CFR, Part 157, Subpart F. The side valve proposed for abandonment formerly served Batesville, Mississippi and has been inactive for a number of years. Batesville's meter station is currently served from taps on adjacent Tennessee pipelines. Additionally, Batesville concurs with the proposed abandonment.

Any person or the Commission's staff may, within 45 days after issuance of the instant notice by the Commission, file pursuant to Rule 214 of the Commission's Procedural Rules (18 CFR 385.214) a motion to intervene or notice of intervention and pursuant to § 157.205 of the Regulations under the Natural Gas Act (18 CFR 157.205) a protest to the request. If no protest is filed within the time allowed therefor, the proposed activity shall be deemed to be authorized effective the day after the time allowed for filing a protest. If a protest is filed and not withdrawn within 30 days after the time allowed for filing a protest, the instant request shall be treated as an application for authorization pursuant to Section 7 of the Natural Gas Act.

David P. Boergers,

Secretary.

[FR Doc. 99–12189 Filed 5–13–99; 8:45 am]

BILLING CODE 6717–01–M

DEPARTMENT OF ENERGY

Federal Energy Regulatory Commission

[Docket No. CP99–517–000]

Williston Basin Interstate Pipeline Company; Notice of Request Under Blanket Authorization

May 10, 1999.

Take notice that on May 6, 1999, Williston Basin Interstate Pipeline Company (Williston Basin), 1250 West Century Avenue, Bismark, North Dakota 58501, filed in Docket No. CP99–517–000 a request pursuant to Sections 157.205 and 157.216, of the Commission's Regulations under the Natural Gas Act (18 CFR 157.205, 157.216) for authorization to abandon facilities located in Park Country, Wyoming under Williston Basin's blanket certificate issued in Docket No. CP82–487–000 pursuant to Section 7 of the Natural Gas Act, all as more fully set forth in the request that is on file with the Commission and open to public inspection. This filing may be viewed on the web at http://www.ferc.fed.us/online/rims.htm (call 202–208–2222 for assistance).

Williston Basin states that it proposes to abandon the CIG-Elk Basin meter station and 526 feet of 8-inch supply lateral pipeline located near Howell Petroleum Plant in Section 29, T58N, R99W, Park County, Wyoming. Williston Basin further states no gas has been delivered through the meter station and pipeline since 1994 and Williston Basin does not foresee any future use of these facilities at this location, all as more fully described in the filed application.

Any person or the Commission's staff may, within 45 days after issuance of the instant notice by the Commission, file pursuant to Rule 214 of the Commission's Procedural Rules (18 CFR 385.214) a motion to intervene or notice of intervention and pursuant to Section 157.205 of the Regulations under the Natural Gas Act (18 CFR 157.205) a protest to the request. If no protest is filed within the time allowed therefor, the proposed activity shall be deemed to be authorized effective the day after the time allowed for filing a protest. If a protest is filed and not withdrawn within 30 days after the time allowed

for filing a protest, the instant request shall be treated as an application for authorization pursuant to Section 7 of the Natural Gas Act.

David P. Boergers,

Secretary.

[FR Doc. 99–12192 Filed 5–13–99; 8:45 am]

BILLING CODE 6717–01–M

DEPARTMENT OF ENERGUY

Federal Energy Regulatory Commission

[Docket No. EG99–127–000, et al.]

Foote Creek III, LLC, et al.; Electric Rate and Corporate Regulation Filings

May 6, 1999.

Take notice that the following filings have been made with the Commission:

1. Foote Creek III, LLC

[Docket No. EG99–127–000]

Take notice that on April 30, 1999, Foote Creek III, LLC, 1455 Frazee Road, Suite 900, San Diego, California, 92108, filed with the Federal Energy Regulatory Commission an application for Commission determination of exempt wholesale generator status pursuant to Part 365 of the Commission's Regulations.

Foote Creek III, LLC, is a Delaware limited liability company that intends to construct, own and operate a 24.75 MW generation facility consisting of thirty-three (33) NEG Micon Model NM 750/44 wind turbine generators in Carbon County, Wyoming, Foote Creek III, LLC, is engaged directly and exclusively in the business of owning or operating, or both owning and operating, all or part of one or more eligible facilities and selling electric energy at wholesale.

Comment date: May 27, 1999, in accordance with Standard Paragraph E at the end of this notice. The commission will limit its consideration of comments to those that concern the adequacy or accuracy of the application.

2. Western Systems Power Pool

[Docket No. ER91–195–037]

Take notice that on April 30, 1999, the Western Systems Power Pool (WSPP) filed certain information as required by Ordering Paragraph (D) of the Commission's June 27, 1991 Order (55 FERC ¶ 61,495) and Ordering Paragraph (C) of the Commission's June 1, 1992 Order On Rehearing Denying Request Not To Submit Information, And Granting In Part And Denying In Part Privileged Treatment. Pursuant to 18 CFR 385.211, WSPP has requested privileged treatment for some of the information filed consistent with the June 1, 1992 order. Copies of WSPP's informational filing are on file with the Commission, and the non-privileged portions are available for public inspection.

Comment date: June 1, 1999, in accordance with Standard Paragraph E at the end of this notice.

3. Morgan Stanley Capital Group Inc.

[Docket No. ER94–1384–023]

Take notice that on April 29, 1999, the above-mentioned power marketer filed a quarterly report with the Commission in the above-mentioned proceeding for information only. This filing is available for public inspection and copying in the Public Reference Room or on the web at www.ferc.fed.us/online/rims.htm for viewing and downloading (call 202–208–2222 for assistance).

4. Citizens Power Sales; Enron Energy Services, Inc.; CL Power Sales Seven, L.L.C.; CL Power Sales Eight, L.L.C.; CL Power Sales Fourteen, L.L.C.; CL Power Sales One, L.L.C.; CL Power Sales Three, L.L.C.; CL Power Sales Four, L.L.C.; CL Power Sales Five, L.L.C.; CL Power Sales Ten, L.L.C.; Sonat Power Marketing L.P.; Sonat Power Marketing Inc.; PacifiCorp Power Marketing, Inc.; PSEG Energy Technologies Incorporated; Select Energy, Inc.; e prime, inc.; FirstEnergy Trading and Power, Marketing, Inc.; Southern Company Energy, Marketing L.P.; Enron Power Marketing, Inc.; Competitive Utility Services Corp.; DPL Energy; Edison Source; Entergy Power Marketing Corp.

[Docket Nos. ER94–1685–024; ER98–13–009; ER96–2652–028; ER96–2652–029; ER99–891–001; ER95–892–039; ER95–892–040; ER95–892–041; ER95–892–042; ER96–2652–027; ER96–2343–011; ER95–1050–017; ER95–1096–018; ER97–2176–009; ER95–1269–014; ER99–14–003; ER95–1295–012; ER97–4166–004; ER94–24–029; ER97–1932–009; ER96–2601–011; ER96–2150–013; ER95–1615–017]

Take notice that on April 30, 1999, the above-mentioned power marketers filed quarterly reports with the Commission in the above-mentioned proceedings for information only. These filings are available for public inspection and copying in the Public Reference Room or on the web at www.ferc.fed.us/online/rims.htm for viewing and downloading (call 202–208–2222 for assistance).

5. Duke Energy Marketing Corp.; Constellation Power Source, Inc.; NRG Power Marketing, Inc.; Pepco Services, Inc.; NESI Power Marketing, Inc.; DTE Energy Trading, Inc.; Alliance Power Marketing, Inc.; PG&E Power Service Company; Edison Mission Marketing & Trading, Inc.; Colonial Energy, Inc.; CL Power Sales Two, L.L.C.; CL Power Sales Six, L.L.C.

[Docket Nos. ER96–109–018; ER97–2261–009; ER97–4281–007; ER98–3096–003; ER97–841–003; ER97–3834–006; ER96–1818–013; ER94–1394–020; ER99–852–002; ER97–1968–007; ER97–1968–008; ER95–892–038; ER96–2652–026]

Take notice that on April 30, 1999, the above-mentioned power marketers filed quarterly reports with the Commission in the above-mentioned proceedings for information only. These filings are available for public inspection and copying in the Public Reference Room or on the web at www.ferc.fed.us/online/rims.htm for viewing and downloading (call 202–208–2222 for assistance).

6. Strategic Energy Ltd.

[Docket No. ER96–3107–009]

Take notice that on April 27, 1999, the above-mentioned power marketer filed a quarterly report with the Commission in the above-mentioned proceeding for information only. This filing is available for public inspection and copying in the Public Reference Room or on the web at www.ferc.fed.us/online/rims.htm for viewing and downloading (call 202–208–2222 for assistance).

7. Central Hudson Gas & Electric Corporation; Consolidated Edison Company of New York, Inc.; Long Island Lighting Company; New York State Electric & Gas Corporation; Niagara Mohawk Power Corp.; Orange & Rockland Utilities, Inc.; Rochester Gas & Electric Corp.; Power Authority of the State of New York; New York Power Pool

[Docket No. ER97–1523–004, OA97–470–005, and ER97–4234–003 (not consolidated)]

Take notice that on April 30, 1999, the Member Systems of the New York Power Pool (Member Systems), tendered for filing a revised Independent System Operator Open Access Transmission Tariff (ISO OATT), a Market Administration and Control Area Services Tariff (ISO Services Tariff), a revised Independent System Operator Agreement (ISO Agreement), a revised New York State Reliability Council Agreement (NYSRC Agreement), a revised Agreement between the Independent System Operator and

Transmission Owners (ISO/TO Agreement) and a revised Agreement between the Independent System Operator and the New York State Reliability Council (ISO/NYSRC Agreement).

The Member Systems state that this filing was made in compliance with the Commission's orders dated June 30, 1998 and January 27, 1999. See Central Hudson Gas & Electric Corp., *et al.*, 83 FERC ¶ 61,352 (1998), 86 FERC ¶ 61,062 (1999).

A copy of this filing was served upon all persons on the Commission's official service list(s) in the captioned proceeding(s), and the respective electric utility regulatory agencies in New York, New Jersey and Pennsylvania.

Comment date: May 28, 1999, in accordance with Standard Paragraph E at the end of this notice.

8. Southern Energy Retail Trading; and Marketing, Inc.; CL Power Sales Nine, L.L.C.; Calpine Power Services Company; H.Q. Energy Services (U.S.) Inc.; CL Power Sales Twelve, L.L.C.; CL Power Sales Eleven, L.L.C.; ConAgra Energy Service, Inc.; West Georgia Generating Company, L.P.; NIPSCO Energy Service Inc.; PP&L EnergyPlus Co.; LG&E Energy Marketing Inc.; CNG Retail Services Corporation; CNG Power Services Corporation; North American Energy Conservation, Inc.

[Docket Nos. ER98–1149–003; ER96–2652–030; ER94–1545–017; ER97–851–008; ER99–893–001; ER99–894–001; ER95–1751–014; ER97–1686–006; ER96–1431–011; ER98–4608–003; ER94–1188–027; ER97–1845–007; ER94–1554–020; ER94–152–021]

Take notice that on April 30, 1999, the above-mentioned power marketers filed quarterly reports with the Commission in the above-mentioned proceedings for information only. These filings are available for public inspection and copying in the Public Reference Room or on the web at www.ferc.fed.us/online/rims.htm for viewing and downloading (call 202–208–2222 for assistance).

9. Shamrock Trading, LLC

[Docket No. ER98–3526–003]

Take notice that on April 28, 1999, the above-mentioned power marketer filed a quarterly report with the Commission in the above-mentioned proceeding for information only. This filing is available for public inspection and copying in the Public Reference Room or on the web at www.ferc.fed.us/online/rims.htm for viewing and downloading (call 202–208–2222 for assistance).

10. ISO New England Inc.; Southern Energy Trading and Marketing, Inc. ; New Millennium Energy Corporation; WPS-Power Development, Inc.; Electric Clearinghouse, Inc.; PG&E Energy Trading—Power; CLECO Corporation; AEP Power Marketing, Inc.; Sempra Energy Trading Corp.; Unitil Resources, Inc.; West Penn Power Company dba Allegheny Energy; Energy International Power Marketing Corporation; Clinton Energy Management Services, Inc.

[Docket Nos. ER98–3554–003; ER95–976–016; ER97–2681–005; ER96–1088–023; ER94–968–026; ER95–1625–019; ER96–2677–005; ER96–2495–010; ER94–1691–024; ER97–2460–005; ER96–2673–010; ER98–2059–004; ER98–3934–003]

Take notice that on April 30, 1999, the above-mentioned power marketers filed quarterly reports with the Commission in the above-mentioned proceedings for information only. These filings are available for public inspection and copying in the Public Reference Room or on the web at www.ferc.fed.us/online/rims.htm for viewing and downloading (call 202–208–2222 for assistance).

11. People's Electric Corporation and Penobscott Bay Energy Co.

[Docket No. ER98–3719–003 and Docket No. ER97–2875–005]

Take notice that on April 29, 1999, the above-mentioned power marketers filed quarterly reports with the Commission in the above-mentioned proceedings for information only. These filings are available for public inspection and copying in the Public Reference Room or on the web at www.ferc.fed.us/online/rims.htm for viewing and downloading (call 202–208–2222 for assistance).

12. Continental Energy Services, L.L.C.

[Docket No. ER98–4191–000]

Take notice that on April 29, 1999, CMS Energy filed a letter with the Federal Energy Regulatory Commission stating that Continental Energy Services, L.L.C. (CES) was dissolved in the acquisition of Continental Natural Gas, Inc. by CMS Energy effective October 15, 1998. Therefore, CMS Energy no longer has CES and will not be participating in any electric ventures.

Comment date: May 19, 1999, in accordance with Standard Paragraph E at the end of this notice.

13. New England Power Pool

[Docket No. ER99–1374–001; ER99–1556–001; and ER99–1609–001]

Take notice that on April 30, 1999, the New England Power Pool (NEPOOL) Executive Committee tendered four revised Market Rules and Procedures in compliance with the Commission's April 6, 1999, order in the captioned dockets (87 FERC ¶ 61,045), to be effective for all NEPOOL market transactions occurring after the Second Effective Date, which is now projected to occur on May 1, 1999.

The NEPOOL Executive Committee states that copies of these materials were sent to all entities on the service lists in the captioned dockets, to all participants in the New England Power Pool, the New England state governors and regulatory commissions.

Comment date: May 20, 1999, in accordance with Standard Paragraph E at the end of this notice.

14. Virginia Electric and Power Company

[Docket No. ER99–1885–000]

Take notice that on April 30, 1999, Virginia Electric and Power Company (Virginia Power), tendered for filing two (2) executed Service Agreements for Long Term Firm Point-to-Point Transmission Service with The Wholesale Power Group under the Open Access Transmission Tariff to Eligible Purchasers dated July 14, 1997. Under the tendered Service Agreements, Virginia Power will provide Long Term Firm Point-to-Point Transmission Service to the Transmission Customer under the rates, terms and conditions of the Open Access Transmission Tariff.

Virginia Power requests an effective date of January 1, 2000.

Copies of the filing were served upon The Wholesale Power Group, the Virginia State Corporation Commission and the North Carolina Utilities Commission.

Comment date: May 20, 1999, in accordance with Standard Paragraph E at the end of this notice.

15. Avista Corporation

[Docket No. ER99–2056–001]

Take notice that on April 30, 1999, Avista Corporation (Avista Corp.), tendered for filing with the Federal Energy Regulatory Commission pursuant to 18 CFR 35.19(a) a refund report as ordered under the above referenced docket.

A copy of this filing has been served upon East Greenacres Irrigation District and The United States Department of the Interior, Bureau of Reclamation.

Comment date: May 20, 1999, in accordance with Standard Paragraph E at the end of this notice.

16. PacifiCorp

[Docket No. ER99–2691–000]

Take notice that on April 30, 1999, PacifiCorp tendered for filing in

accordance with 18 CFR 35 of the Commission's Rules and Regulations, Revisions to the Network Transmission Service Agreement between PacifiCorp's Transmission Function and PacifiCorp's Merchant Function.

Copies of this filing were supplied to the Washington Utilities and Transportation Commission and the Public Utility Commission of Oregon.

Comment date: May 20, 1999, in accordance with Standard Paragraph E at the end of this notice.

17. New England Power Pool

[Docket No. ER99–2692–000]

Take notice that on April 30, 1999, the New England Power Pool (NEPOOL), Executive Committee tendered for filing new Appendices to assist in the administration action of the NEPOOL Market Rules (the Market Rules). NEPOOL has requested that the Appendices to the Market Rules apply for administration of all NEPOOL market transactions occurring after the Second Effective Date, which is now projected to occur on May 1, 1999.

The NEPOOL Executive Committee states that copies of these materials were sent to all participants in the New England Power Pool, the New England state governors and regulatory commissions.

Comment date: May 20, 1999, in accordance with Standard Paragraph E at the end of this notice.

18. Northeast Utilities Service Company

[Docket No. ER99–2698–000]

Take notice that on April 30, 1999, Northeast Utilities Service Company (NUSCO), on behalf of The Connecticut Light and Power Company, tendered for filing pursuant to Section 205 of the Federal Power Act and Section 35.13 of the Commission's Regulations, a rate schedule change for sales of electric energy to Connecticut Municipal Electric Energy Cooperative.

NUSCO states that a copy of this filing has been mailed to Connecticut Municipal Electric Energy Cooperative and the Connecticut Department of Public Utility Control.

NUSCO requests that the rate schedule change become effective on May 1, 1999.

Comment date: May 20, 1999, in accordance with Standard Paragraph E at the end of this notice.

19. PECO Energy Company

[Docket No. ER99–2699–000]

Take notice that on April 30, 1999, PECO Energy Company (PECO), tendered for filing under Section 205 of the Federal Power Act, 16 U.S.C. S 792 *et seq.*, a Transaction Letter dated April 30, 1999 with Horizon Energy Company d/b/a Exelon Energy (EXELON) under PECO's FERC Electric Tariff Original Volume No. 1 (Tariff).

PECO requests an effective date of May 1, 1999, for the Transaction Letter.

PECO states that copies of this filing have been supplied to EXELON and to the Pennsylvania Public Utility Commission.

Comment date: May 20, 1999, in accordance with Standard Paragraph E at the end of this notice.

20. New England Power Pool

[Docket No. ER99–2700–000]

Take notice that on April 30, 1999, the New England Power Pool Executive Committee tendered for filing a signature page to the New England Power Pool (NEPOOL), Agreement dated September 1, 1971, as amended, signed by DukeSolutions, Inc., (DukeSolutions). The NEPOOL Agreement has been designated NEPOOL FPC No. 2.

The Executive Committee states that the Commission's acceptance of DukeSolutions's signature page would permit NEPOOL to expand its membership to include DukeSolutions. NEPOOL further states that the filed signature page does not change the NEPOOL Agreement in any manner, other than to make DukeSolutions a member in NEPOOL.

NEPOOL requests an effective date of May 1, 1999, for commencement of participation in NEPOOL by DukeSolutions.

Comment date: May 20, 1999, in accordance with Standard Paragraph E at the end of this notice.

21. MidAmerican Energy Company

[Docket No. ER99–2705–000]

Take notice that on April 30, 1999, MidAmerican Energy Company(MidAmerican), tendered for filing a proposed change in its Rate Schedule for Power Sales, FERC Electric Rate Schedule, Original Volume No. 5. The proposed change consists of certain reused tariff sheets consistent with the quarterly filing requirement.

MidAmerican states that it is submitting these tariff sheets for the purpose of complying with the requirements set forth in Southern Company Services, Inc., 75 FERC ¶ 61,130 (1996), relating to quarterly filings by public utilities of summaries of short-term market-based power transactions. The tariff sheets contain summaries of such transactions under the Rate Schedule for Power Sales for the applicable quarter.

MidAmerican proposes an effective date of the first day of the applicable quarter for the rate schedule change. Accordingly, MidAmerican requests a waiver of the 60-day notice requirement for this filing. MidAmerican states that this date is consistent with the requirements of the Southern Company Services, Inc., order and the effective date authorized in Docket No. ER96–2459–000.

Copies of the filing were served upon MidAmerican's customers under the Rate Schedule for Power Sales and the Iowa Utilities Board, the Illinois Commerce Commission and the South Dakota Public Utilities Commission.

Comment date: May 20, 1999, in accordance with Standard Paragraph E at the end of this notice.

22. PacifiCorp

[Docket No. ER99–2715–000]

Take notice that on April 30, 1999, PacifiCorp tendered for filing with the Federal Energy Regulatory Commission pursuant to 18 CFR, Section 35.13, a Certificate of Concurrence in Puget Sound Energy, Inc.'s filing regarding the 1998–99 Operating Procedures under the Pacific Northwest Coordination Agreement Docket No. ER99–2026–000, previously noticed on March 5, 1999.

Comment date: May 20, 1999, in accordance with Standard Paragraph E at the end of this notice.

23. Milford Power Limited Partnership

[Docket No. ER99–2716–000]

Take notice that on April 30, 1999, Milford Power Limited Partnership (Milford), tendered for filing a revised rate schedule and request for certain waivers and authorizations under various regulations of the Federal Energy Regulatory Commission (the Commission), in compliance with New England Power Pool, 85 FERC ¶ 61,379 and consistent with Edison Mission Marketing & Trading., Inc., 86 FERC ¶ 61,072.

Milford has requested that the Commission establish an effective date of April 1, 1999, for the rate schedule.

A copy of the filing was served upon the Massachusetts Department of Public Utilities.

Comment date: May 20, 1999, in accordance with Standard Paragraph E at the end of this notice.

24. Consumers Energy Company

[Docket No. ER99–2717–000]

Take notice that on April 30, 1999, Consumers Energy Company (Consumers), tendered for filing 5 executed service agreements for unbundled wholesale power service

pursuant to Consumers' Market Based Power Sales Tariff accepted for filing in Docket No. ER97–964–000. The service agreements all have effective dates of April 14, 1999 and are with the following customers:

1. Commonwealth Edison Co.
2. Duke Power
3. Duke Solutions, Inc.
4. Minnesota Power, Inc.
5. Cinergy Services, Inc.

Copies of the filing have been served on the Michigan Public Service Commission and the customers listed above.

Comment date: May 20, 1999, in accordance with Standard Paragraph E at the end of this notice.

25. Northeast Utilities Service Company

[Docket No. ER99–2719–000]

Take notice that on April 30, 1999, Northeast Utilities Service Company (NUSCO) on behalf of its affiliate, Public Service Company of New Hampshire tendered for filing a Letter Agreement with Fitchburg Gas and Electric Light Company (FG&E).

NUSCO requests an effective date the later of May 1, 1999, or the date the Second Effective Date market rules become effective in New England.

NUSCO states that a copy of this filing was mailed to FG&E.

Comment date: May 20, 1999, in accordance with Standard Paragraph E at the end of this notice.

26. Georgia Power Company

[Docket No. ER99–2720–000]

Take notice that on April 30, 1999, Georgia Power Company tendered for filing a Service Agreement by and among itself and Oglethorpe Power Corporation pursuant to which Georgia Power Company will make wholesale power sales to Oglethorpe Power Corporation for a term in excess of one (1) year. The Service Agreement supersedes and replaces the Block Power Sale Agreement, Rate Schedule FERC No. 827, in its entirety.

Comment date: May 20, 1999, in accordance with Standard Paragraph E at the end of this notice.

27. Duke Energy Moss Landing LLC

[Docket No. ER99–2721–000]

Take notice that on April 30, 1999, pursuant to Section 205 of the Federal Power act and Section 35.15(a), 18 CFR 35.15(a) of the Commission's Regulations, Duke Energy Moss Landing LLC (Moss Landing), tendered for filing with the Federal Energy Regulatory Commission a Notice of Termination of the Must-Run Rate Schedule between Moss Landing and the California Independent System Operator Corporation as the Must-Run Rate Schedule applies to Unit 7, designated as Moss Landing's FERC Rate Schedule No. 2.

Additionally, pursuant to Section 35.15(a) of the Commission's Regulations, Moss Landing requests an effective date for this termination of June 30, 1999.

Comment date: May 20, 1999, in accordance with Standard Paragraph E at the end of this notice.

28. Commonwealth Electric Company

[Docket No. ER99–2723–000]

Take notice that on April 30,1999, Commonwealth Electric Company (Commonwealth), tendered for filing the Service Agreement for Network Integration Transmission, Network Operating Agreement, Interconnection Agreement and Distribution Service Agreement between Commonwealth Electric Company and Massachusetts Bay Transportation Authority (MBTA).

The MBTA seeks to take service on May 1, 1999 in order for the MBTA to obtain the electric energy it has already purchased from BECo. Therefore, Commonwealth respectfully requests an effective date of May 1, 1999, for the above Agreements and respectfully requests waiver of the waiver of any portion of the Commission's Regulations that are not satisfied by the enclosed information.

Comment date: May 20, 1999, in accordance with Standard Paragraph E at the end of this notice.

29. Milford Power Limited Partnership

[Docket No. ER99–2729–000]

Take notice that on April 30, 1999, Milford Power Limited Partnership (Milford), tendered for filing an umbrella service agreement for short-term power sales from Milford's electric generation facility located in Milford, Massachusetts to Select Energy, Inc., and requests waiver of the Commission's prior notice requirement.

Milford has requested that the Commission establish an effective date of April 1, 1999, for the service agreement.

A copy of the filing was served upon the Massachusetts Department of Public Utilities.

Comment date: May 20, 1999, in accordance with Standard Paragraph E at the end of this notice.

30. Entergy Services, Inc.

[Docket No. ER99–2731–000]

Take notice that on April 30, 1999, Entergy Services, Inc. (Entergy Services), on behalf of Entergy Arkansas, Inc. (EAI), tendered for filing a Long-Term Market Rate Service Agreement between EAI and Union Electric Company d/b/a Ameren UE for the sale of power under Entergy Services' Rate Schedule SP.

Comment date: May 20, 1999, in accordance with Standard Paragraph E at the end of this notice.

31. New England Power Pool

[Docket No. ER99–2732–000]

Take notice that on April 30, 1999, the New England Power Pool Executive Committee tendered for filing a signature page to the New England Power Pool (NEPOOL) Agreement dated September 1, 1971, as amended, signed by DukeSolutions, Inc., (DukeSolutions). The NEPOOL Agreement has been designated NEPOOL FPC No. 2.

The Executive Committee states that the Commission's acceptance of DukeSolutions's signature page would permit NEPOOL to expand its membership to include DukeSolutions. NEPOOL further states that the filed signature page does not change the NEPOOL Agreement in any manner, other than to make DukeSolutions a member in NEPOOL.

NEPOOL requests an effective date of May 1, 1999, for commencement of participation in NEPOOL by DukeSolutions.

Comment date: May 20, 1999, in accordance with Standard Paragraph E at the end of this notice.

32. Central Vermont Public Service Corporation

[Docket No. ER99–2733–000]

Take notice that on April 30, 1999, Central Vermont Public Service Corporation (Central Vermont), tendered for filing an amended and restated market-based sales tariff (MR Tariff). The MR Tariff revises the terms and conditions upon which Central Vermont makes sales of capacity and/or energy available at market-based rates and resells transmission rights on a short-term or long-term basis. The MR Tariff also allows Central Vermont to sell ancillary services at market-based rates in NEPOOL's ancillary services markets.

The MR Tariff will supersede Central Vermont's existing market-based sales tariff accepted in Docket No. ER98–2329–001 and all new transactions will be subject to the new MR Tariff. Central Vermont requests waiver of the Commission's notice requirements so that the MR Tariff may become effective on May 1, 1999, the day NEPOOL's ancillary service markets are expected to begin operation.

Comment date: May 20, 1999, in accordance with Standard Paragraph E at the end of this notice.

33. Commonwealth Edison Company

[Docket No. ER99–2734–000]

Take notice that on April 30, 1999, Commonwealth Edison Company (ComEd), tendered for filing a revised Index of Customers to correct references to the and date of Service Agreements between ComEd and Avista Energy, Inc. (Avista), Niagara Mohawk Energy Marketing, Inc., (NIMO) and Tenaska Power Services Company (Tenaska) under the terms of ComEd's Open Access Transmission Tariff (OATT). ComEd also submitted an unexecuted Service Agreement establishing Tenaska as a short-term firm customer under the terms of ComEd's Open Access Transmission Tariff (OATT).

ComEd requests an effective date of April 1, 1998, for the short-term firm service agreement with Tenaska to coincide with the first day of service to Tenaska under this type of Service Agreement.

Copies of this filing were served on Avista, NIMO, and Tenaska.

Comment date: May 20, 1999, in accordance with Standard Paragraph E at the end of this notice.

34. Illinois Power Company

[Docket No. ER99–2735–000]

Take notice that on April 30, 1999, Illinois Power Company (Illinois Power), 500 South 27th Street, Decatur, Illinois 62526, tendered for filing updated specification pages to the existing Network Service Agreement under which Soyland Power Cooperative will take transmission service pursuant to its open access transmission tariff. The agreements are based on the Form of Service Agreement in Illinois Power's tariff.

Illinois Power has requested an effective date of April 1, 1999.

Comment date: May 20, 1999, in accordance with Standard Paragraph E at the end of this notice.

35. American Electric Power Service Corporation

[Docket No. ER99–2753–000]

Take notice that on April 30, 1999, the American Electric Power Service Corporation (AEPSC), tendered for filing service agreements by the AEP Companies under the Wholesale Market Tariff of the AEP Operating Companies (Power Sales Tariff). The Power Sales Tariff was accepted for filing effective October 10, 1997 and has been designated AEP Operating Companies' FERC Electric Tariff Original Volume No. 5.

AEPSC respectfully requests waiver of notice to permit these service agreements to be made effective for service as specified in the submittal letter to the Commission with this filing.

A copy of the filing was served upon the Parties and the State Utility Regulatory Commissions of Indiana, Kentucky, Michigan, Ohio, Tennessee, Virginia and West Virginia.

Comment date: May 20, 1999, in accordance with Standard Paragraph E at the end of this notice.

36. Northeast Utilities Service Company

[Docket No. ER99–2761–000]

Take notice that on April 30, 1999, Northeast Utilities Service Company (NUSCO), on behalf of The Connecticut Light and Power Company, tendered for filing pursuant to Section 205 of the Federal Power Act and Section 35.13 of the Commission's Regulations, a rate schedule change for sales of electric energy to Town of Wallingford, Connecticut, Department of Public Utilities and Connecticut Municipal Electric Energy Cooperative.

NUSCO states that a copy of this filing has been mailed to Town of Wallingford, Connecticut, Department of Public Utilities, Connecticut Municipal Electric Energy Cooperative and the Connecticut Department of Public Utility Control.

NUSCO requests that the rate schedule change become effective on May 1, 1999.

Comment date: May 20, 1999, in accordance with Standard Paragraph E at the end of this notice.

37. San Diego Gas & Electric Company

[Docket No. ER99–2762–000]

Take notice that on April 30, 1999, San Diego Gas and Electric Company (SDG&E), tendered for filing certain tariff sheets in its Transmission Owner Tariff (TO Tariff) to supersede TO Tariff No. 47 and add new Original TO Tariff Sheet Nos. 67 through 77.

SDG&E requests an effective date of July 1, 1999

SDG&E states the instant filing is submitted to provide for the recovery from End Use Customers of Reliability Must Run charges billed by the California Independent Operator Corporation to SDG&E in its capacity as a Participating Transmission Owner for services provided under the RMR Contracts for Encina, South Bay and the combustion turbines located in SDG&E's service area.

Comment date: May 20, 1999, in accordance with Standard Paragraph E at the end of this notice.

38. Western Systems Power Pool

[Docket No. ER99–2763–000]

Take notice that on April 30, 1999, the Western Systems Power Pool (WSPP), tendered for filing certain revisions to the WSPP Agreement. The WSPP states the revisions to the WSPP Agreement are necessary to update the terms of the WSPP Agreement and better ensure commercial enforceability of the agreements terms.

WSPP seeks an effective date of June 1, 1999, for this filing.

Comment date: May 20, 1999, in accordance with Standard Paragraph E at the end of this notice.

39. Delmarva Power & Light Company and Atlantic City Electric Company

[Docket No. ER99–2781–000]

Take notice that on April 30, 1999, Delmarva Power & Light Company (Delmarva) and Atlantic City Electric Company (Atlantic) tendered for filing amendments to Delmarva's and Atlantic's market-based rate tariff filings in response to the Federal Energy Regulatory Commission's (FERC) March 16, 1999, deficiency letter in the above-captioned proceedings. This filing includes (1) Revisions to Delmarva's and Atlantic's market-based rate tariffs; (2) notice of the withdrawal of the service agreements pursuant to which Delmarva and Atlantic would have been eligible for service under each other's market-based rate tariffs in Docket Nos. ER99–1839–000 and ER99–1898–000; and (3) a separate power sales agreement between Delmarva and Atlantic to allow capacity credit transactions at the market prices established by the PJM Power Exchange.

Delmarva and Atlantic request an effective date of January 15, 1999 for the revisions to their market-rate sales tariffs and January 18, 1999 for the Capacity Credit Agreement.

Delmarva and Atlantic state that copies of this filing have been served upon all the customers under their market-based rate tariffs.

Comment date: May 20, 1999, in accordance with Standard Paragraph E at the end of this notice.

Standard Paragraphs:

Any person desiring to be heard or to protest such filing should file a motion to intervene or protest with the Federal Energy Regulatory Commission, 888 First Street, NE, Washington, DC 20426, in accordance with Rules 211 and 214 of the Commission's Rules of Practice and Procedure (18 CFR 385.211 and 385.214). All such motions or protests should be filed on or before the comment date. Protests will be

considered by the Commission in determining the appropriate action to be taken, but will not serve to make protestants parties to the proceeding. Any person wishing to become a party must file a motion to intervene. Copies of these filings are on file with the Commission and are available for public inspection. This filing may also be viewed on the Internet at http://www.ferc.fed.us/online/rims.htm (call 202–208–2222 for assistance).

David P. Boergers,

Secretary.

[FR Doc. 99–12239 Filed 5–13–99; 8:45 am]

BILLING CODE 6717–01–P

DEPARTMENT OF ENERGY

Federal Energy Regulatory Commission

[Docket No. ER99–2364–000, et al.]

Genstar Energy, L.L.C., et al.; Electric Rate and Corporate Regulation Filings

May 5, 1999.

Take notice that the following filings have been made with the Commission:

1. Genstar Energy, L.L.C.

[Docket No. ER99–2364–000]

Take notice that on April 29, 1999, Genstar Energy, L.L.C. (Genstar) filed an amendment to its petition for acceptance of Genstar Rate Schedule FERC No. 1; the granting of certain blanket approvals, including the authority to sell electricity at market-based rates; and the waiver of certain Commission regulations.

Genstar intends to engage in wholesale electric power and energy purchases and sales as a marketer. Genstar is not in the business of generating or transmitting electric power.

Comment date: May 19, 1999, in accordance with Standard Paragraph E at the end of this notice.

2. Keystone Energy Services, Inc.; Energy Atlantic, LLC; Cook Inlet Energy Supply

[Docket Nos. ER97–3053–006; ER98–4381–002; ER96–1410–013]

Take notice that on April 26, 1999, the above-mentioned power marketers filed quarterly reports with the Commission in the above-mentioned proceedings for information only. These filings are available for public inspection and copying in the Public Reference Room or on the web at www.ferc.fed.us/online/rims.htm for viewing and downloading (call 202–208–2222 for assistance).

3. Black Hills Corporation

[Docket No. ER99–2648–000]

Take notice that on April 29, 1999, Black Hills Corporation (Black Hills), tendered for filing a Service Agreement for wholesale power sales transactions (the Service Agreement), under Black Hills' Market-Based Rate Wholesale Power Sales Tariff between Black Hills and Public Service Company of Colorado. The Service Agreement is dated as of March 29, 1999.

Comment date: May 20, 1999, in accordance with Standard Paragraph E at the end of this notice.

4. Northeast Utilities Service Co.

[Docket No. ER99–2655–000]

Take notice that on April 29, 1999, Northeast Utilities Service Company (NUSCO), on behalf of its affiliates, The Connecticut Light and Power Company, The Hartford Electric Light Company, and Western Massachusetts Electric Company, tendered for filing a Letter Agreement with Massachusetts Municipal Wholesale Electric Company (MMWEC). NUSCO requests an effective date the later of May 1, 1999, or the date the Second Effective Date market rules become effective in New England.

NUSCO states that a copy of this filing was mailed to MMWEC.

Comment date: May 20, 1999, in accordance with Standard Paragraph E at the end of this notice.

5. Indeck Pepperell Power Associates

[Docket No. ER99–2656–000]

Take notice that on April 29, 1999, Indeck Pepperell Power Associates, Inc. (Indeck Pepperell), tendered for filing with the Federal Energy Regulatory Commission a Power Purchase and Sale Agreement (Service Agreement), between Indeck Pepperell and Central Vermont Power Corporation, (CVPC), dated April 16, 1999, for service under Rate Schedule FERC No. 1. Indeck Pepperell requests that the Service Agreement be made effective as of May 1, 1999.

Comment date: May 20, 1999, in accordance with Standard Paragraph E at the end of this notice.

6. COM/Energy Marketing, Inc.

[Docket No. ER99–2657–000]

Take notice that on April 29, 1999, COM/Energy Marketing, Inc. (CEM) tendered for filing a Notice of Termination of its market based power sales rate, Rate Schedule FERC No. 1 as currently on file with the Commission and in effect pursuant to order of the Commission dated December 23, 1997 in FERC Docket No. ER98–449–000 (81 FERC 61,373)

Comment date: May 20, 1999, in accordance with Standard Paragraph E at the end of this notice.

7. Northeast Utilities Service Co.

[Docket No. ER99–2658–000]

Take notice that on April 29, 1999, Northeast Utilities Service Company (NUSCO), on behalf of its affiliates, The Connecticut Light and Power Company, Western Massachusetts Electric Company, and Public Service Company of New Hampshire, tendered for filing a First Amended and Restated Unit Exchange Agreement with FPL Energy Maine, Inc. NUSCO requests an effective date the later of May 1, 1999, or the date the Second Effective Date market rules become effective in New England.

NUSCO states that a copy of this filing was mailed to FPL Energy Maine, Inc.

Comment date: May 20, 1999, in accordance with Standard Paragraph E at the end of this notice.

8. PECO Energy Company

[Docket No. ER99–2659–000]

Take notice that on April 29, 1999, PECO Energy Company (PECO), filed a Service Agreement dated April 27, 1999 with UGI Utilities, Inc. (UGI), under PECO's FERC Electric Tariff Original Volume No. 1 (Tariff). The Service Agreement adds UGI as a customer under the Tariff.

PECO requests an effective date of April 27, 1999 for the Service Agreement.

PECO states that copies of this filing have been supplied to UGI and to the Pennsylvania Public Utility Commission.

Comment date: May 20, 1999, in accordance with Standard Paragraph E at the end of this notice.

9. Florida Power Corporation

[Docket No. ER99–2660–000]

Take notice that on April 30, 1999 Florida Power Corporation (Florida Power), tendered for filing revisions to the capacity charges, reservation fees and energy adders for various interchange services provided by Florida Power pursuant to interchange contracts as follows:

Rate schedule	Customer
65	Southeastern Power Administration.
80	Tampa Electric Company.
81	Florida Power & Light Company.
82	City of Homestead.
86	Orlando Utilities Commission.
88	Gainesville Regional Utility.
91	Jacksonville Electric Authority.
92	City of Lakeland.
94	Kissimmee Utility Authority.

Rate schedule	Customer
95	City of St. Cloud.
100	Fort Pierce Utilities Authority.
101	City of Lake Worth.
102	Florida Power & Light Company.
103	City of Starke.
104	City of New Smyrna Beach.
105	Florida Municipal Power Agency.
108	City of Key West.
119	Reedy Creek Improvement District.
122	City of Tallahassee.
128	Seminole Electric Cooperative, Inc.
139	Oglethorpe Power Corp.
141	City of Vero Beach.
142	Big Rivers Electric Corporation.
148	Alabama Electric Cooperative, Inc.
153	Enron Power Marketing, Inc.
154	Catex Vitol Electric, L.L.C.
155	Louis Dreyfus Electric Power, Inc.
156	Electric Clearing House, Inc.
157	LG & E Power Marketing, Inc.
158	MidCon Power Service Corp.
159	Koch Power Services Company.
160	Sonat Power Marketing, Inc.
161	Citizens Lehman Power Sales.
162	AES Power, Inc.
163	Intercoast Power Marketing Company.
164	Valero Power Service Company.
166	Eastex Power Marketing, Inc.
167	NorAm Energy Services, Inc.
168	Western Power Services.
169	CNG Power Services Corporation.
170	Calpine Power Services Company.
171	SCANA Energy Marketing, Inc.
172	PanEnergy Trading & Market Services.
173	Coral Power, L.L.C.
174	Aquila Power Corporation.
175	The Energy Authority, Inc.
176	NP Energy Inc.
177	Morgan Stanley Capital Group, Inc.

The interchange services which are affected by these revisions are (1) Service Schedule A—Emergency Service; (2) Service Schedule B—Short Term Firm Service; (3) Service Schedule D—Firm Service; (4) Service Schedule F—Assured Capacity and Energy Service; (5) Service Schedule G—Backup Service; (6) Service Schedule H—Reserve Service; (7) Service Schedule I—Regulation Service; (8) Service Schedule OS–Opportunity Sales; (9) Service Schedule RE—Replacement Energy Service; (10) Contract for Assured Capacity And Energy With Florida Power & Light Company; (11) Contract for Scheduled Power and Energy with Florida Power & Light Company.

Florida Power requests that the amended revised capacity charges, reservation fees and energy adder be made effective on May 1, 1999. Florida Power requests waiver of the Commission's sixty-day notice requirement. If waiver is denied, Florida Power requests that the filing be made effective 60 days after the filing date.

Comment date: May 20, 1999, in accordance with Standard Paragraph E at the end of this notice.

10. Niagara Mohawk Power Corporation

[Docket No. ER99–2661–000]

Take notice that on April 29, 1999, Niagara Mohawk Power Corporation (NMPC), tendered for filing with the Federal Energy Regulatory Commission executed a form Service Agreement between NMPC and Metromedia Energy, Inc. (Purchaser). The Service Agreement specifies that the Purchaser has signed on to and has agreed to the terms and conditions of NMPC's Power Sales Tariff designated as NMPC's FERC Electric Tariff, Original Volume No. 2. This Tariff, approved by FERC on April 15, 1994, and which has an effective date of March 13, 1993, will allow NMPC and the Purchaser to enter into separately scheduled transactions under which NMPC will sell to the Purchaser capacity and/or energy as the parties may mutually agree.

In its filing letter, NMPC also included a Certificate of Concurrence for the Purchaser.

NMPC is : (a) generally requesting an effective date of April 1, 1999 for the agreement, and (b) requesting waiver of the Commission's notice requirements for good cause shown.

NMPC has served copies of the filing upon the New York State Public Service Commission, and the companies included in a Service List enclosed with the filing.

Comment date: May 20, 1999, in accordance with Standard Paragraph E at the end of this notice.

11. Niagara Mohawk Power Corporation

[Docket No. ER99–2662–000]

Take notice that on April 29, 1999, Niagara Mohawk Power Corporation (Niagara Mohawk), tendered for filing with the Federal Energy Regulatory Commission an executed, amended Transmission Service Agreement between Niagara Mohawk and the Power Authority of the State of New York (NYPA), to permit NYPA to deliver power and energy from NYPA's FitzPatrick Plant, Bid Process Suppliers and Substitute Suppliers to the points where Niagara Mohawk's transmission system connects to its retail distribution system west of Niagara Mohawk's constrained Central-East Interface. This Transmission Service Agreement specifies that NYPA has signed on to and has agreed to the terms and conditions of Niagara Mohawk's Open Access Transmission Tariff as filed in Docket No. OA96–194–000.

Niagara Mohawk requests an effective date of April 1, 1999. Niagara Mohawk has requested waiver of the notice requirements for good cause shown.

Niagara Mohawk has served copies of the filing upon New York Public Service Commission and NYPA.

Comment date: May 20, 1999, in accordance with Standard Paragraph E at the end of this notice.

12. PJM Interconnection, L.L.C.

[Docket No. ER99–2663–000]

Take notice that on April 29, 1999, PJM Interconnection, L.L.C. (PJM), on behalf of the PJM Reliability Committee, filed amendments to the Reliability Agreement Among Load Serving Entities in the PJM Control Area (RAA), to reflect changes consistent with the implementation of Schedule 11 (PJM Capacity Credit Markets) of the Amended and Restated Operating Agreement of PJM Interconnection L.L.C., to revise the method of determining the parties' Weighted Vote, and to change the historical base for calculating the equivalent demand forced outage rate from three years to five years.

Copies of this filing were served upon all parties to the RAA and each state electric utility regulatory commission in the PJM control area.

Comment date: May 20, 1999, in accordance with Standard Paragraph E at the end of this notice.

13. Automated Power Exchange, Inc.

[Docket No. ER99–2668–000]

Take notice that on April 29, 1999, Automated Power Exchange, Inc., filed a revision to its rate schedule.

Comment date: May 20, 1999, in accordance with Standard Paragraph E at the end of this notice.

14. Niagara Mohawk Power Corp.

[Docket No. ER99–2669–000]

Take notice that on April 29, 1999, Niagara Mohawk Power Corporation (NMPC), tendered for filing with the Federal Energy Regulatory Commission executed form Service Agreements between NMPC and multiple parties (Purchasers). The Service Agreements specify that the Purchasers have signed on to and have agreed to the terms and conditions of NMPC's Power Sales Tariff designated as NMPC's FERC Electric Tariff, Original Volume No. 2. This Tariff, approved by FERC on April

15, 1994, and which has an effective date of March 13, 1993, will allow NMPC and the Purchasers to enter into separately scheduled transactions under which NMPC will sell to the Purchasers capacity and/or energy as the parties may mutually agree.

In its filing letter, NMPC also included a Certificate of Concurrence for each Purchaser.

NMPC is: (a) generally requesting an effective date of April 1, 1999 for the agreements, and (b) requesting waiver of the Commission's notice requirements for good cause shown.

NMPC has served copies of the filing upon the New York State Public Service Commission, and the companies included in a Service List enclosed with the filing.

Comment date: May 20, 1999, in accordance with Standard Paragraph E at the end of this notice.

15. Southern Company Services, Inc.

[Docket No. ER99–2670–000]

Take notice that on April 29, 1999, Southern Company Services, Inc., acting on behalf of Alabama Power Company, Georgia Power Company, Gulf Power Company, Mississippi Power Company and Savannah Electric and Power Company (collectively referred to as the Southern Operating Companies), submitted an updated generation dominance analysis in connection with the Southern Operating Companies' market-based rate authority.

Comment date: May 20, 1999, in accordance with Standard Paragraph E at the end of this notice.

16. Sithe Mystic LLC; Sithe Edgar LLC; Sithe New Boston LLC; Sithe Framingham LLC; Sithe West Medway LLC; Sithe Wyman LLC; Sithe Power Marketing, Inc.; Sithe Power Marketing, L.P.

[Docket No. ER99–2671–000]

Take notice that on April 29, 1999, Sithe Mystic LLC, Sithe Edgar LLC, Sithe New Boston LLC, Sithe Framingham LLC, Sithe West Medway LLC, Sithe Wyman LLC, Sithe Power Marketing, L.P. and Sithe Power Marketing, Inc. (together, Applicants) tendered for filing proposed rate schedules that would permit them to make sales of the NEPOOL-defined market-based ancillary services at market-based rates.

Applicants request authority to make wholesale sales of the NEPOOL-defined market-based ancillary services at market-based rates, and request certain blanket authorizations, and waiver of certain of the Commission's Regulations. Applicants further request that the Commission promptly issue an order granting its acceptance of this filing with an effective date no later than the opening date of the NEPOOL markets for ancillary services (currently scheduled for May 1, 1999).

Comment date: May 20, 1999, in accordance with Standard Paragraph E at the end of this notice.

17. Louisville Gas and Electric Company; Sithe New England Holdings LLC; Duquesne Light Company; Montaup Electric Company; Oklahoma Gas and Electric Co.

[Docket Nos. ER99–2674–000; ER99–2677–000; ER99–2678–000; ER99–2681–000; ER99–2682–000]

Take notice that on April 29, 1999, the above-mentioned public utilities filed their quarterly transaction report for the first quarter ending March 31, 1999.

Comment date: May 19, 1999, in accordance with Standard Paragraph E at the end of this notice.

18. Monmouth Energy, Inc.

[Docket No. ER99–2679–000]

Take notice that on April 29, 1999, the above-mentioned Affiliated Power Producers filed quarterly reports for the quarter ending March 31, 1999.

Comment date: May 19, 1999, in accordance with Standard Paragraph E at the end of this notice.

19. Niagara Mohawk

[Docket No. ER99–2683–000]

Take notice that on April 29, 1999, Niagara Mohawk tendered for filing with the Federal Energy Regulatory Commission an executed, amended Transmission Service Agreement between Niagara Mohawk and the Power Authority of the State of New York (NYPA) to permit NYPA to deliver power and energy from NYPA's Fitzpatrick Plant, Bid Process Suppliers and Substitute Suppliers to the points where Niagara Mohawk's transmission system connects to its retail distribution system East of Niagara Mohawk's constrained Central-East Interface. This Transmission Service Agreement specifies that NYPA has signed on to and has agreed to the terms and conditions of Niagara Mohawk's Open Access Transmission Tariff as filed in Docket No. OA96–194–000.

Niagara Mohawk requests an effective date of April 1, 1999.

Niagara Mohawk has served copies of the filing upon New York Public Service Commission and NYPA.

Comment date: May 19, 1999, in accordance with Standard Paragraph E at the end of this notice.

20. Entergy Services, Inc.

[Docket No. ER99–2724–000]

Take notice that on April 30, 1999, Entergy Services, Inc. (Entergy Services), as agent for System Energy Resources, Inc. (SERI), tendered for filing the annual informational update (Update) containing the 1999 redetermination of the Monthly Capacity Charges, prepared in accordance with the provisions of SERI's Power Charge Formula (PCF) Tariff. Entergy Services states that the Update redetermines the formula rate in accordance with the annual rate redetermination provisions of section 2(B) of the PFC.

Comment date: May 20, 1999, in accordance with Standard Paragraph E at the end of this notice.

21. California Independent System Operator Corporation

[Docket No. ER99–2730–000]

Take notice that on April 30, 1999, the California Independent System Operator Corporation (ISO) tendered for filing a proposed amendment (Amendment No. 16) to the ISO Tariff, which establishes the Grid Management Charge to be effective July 1, 1999.

Pursuant to Section 205 of the Federal Power Act, 16 U.S.C. § 824d and Section 35.13(a)(2)(iii) of the Commission's Regulations, 18 CFR 35.13(a)(2)(iii), the ISO seeks approval of the Grid Management Charge rate formula and assessment provisions, and requests that the Commission permit the proposed Tariff changes to go into effect on July 1, 1999, without being subject to refund. In the alternative, if the Commission orders refunds, the ISO requests that it be authorized to institute a surcharge to recover the refunded revenues from other customers.

The ISO states that this filing has been served upon the Public Utilities Commission of California, the California Energy Commission, the California Electricity Oversight Board, on all parties with effective Scheduling Coordinator Agreements under the ISO Tariff, and all parties on the official service list for Dockets Nos. EL99–47–000 and ER99–473–000.

Comment date: May 20, 1999, in accordance with Standard Paragraph E at the end of this notice.

22. UNITIL Power Corp.

[Docket No. ER99–2737–000]

Take notice that on April 30, 1999, UNITIL Power Corp. Tendered for filing pursuant to Schedule II Section H of Supplement No. 1 to Rate Schedule FERC Number 1, the UNITIL System Agreement, the following material:

1. Statement of all sales and billing transactions for the period January 1, 1998 through December 31, 1998 along with the actual costs incurred by UNITIL Power Corp. by FERC account.

2. UNITIL Power Corp. rates billed from January 1, 1998 to December 31, 1998 and supporting rate development.

Comment date: May 20, 1999, in accordance with Standard Paragraph E at the end of this notice.

23. Northeast Utilities Service Company

[Docket No. ER99–2738–000]

Take notice that on April 30, 1999, Northeast Utilities Service Company (NUSCO), on behalf of The Connecticut Power and Light Company, Western Massachusetts Electric Company, Holyoke Water Power Company (including Holyoke Power and Electric Company) and Public Service Company of New Hampshire tendered for filing under section 205 of the Federal Power Act a rate schedule change for sales to UNITIL Power Corporation.

NUSCO states that a copy of this filing has been mailed to UNITIL Power Corporation.

Comment date: May 20, 1999, in accordance with Standard Paragraph E at the end of this notice.

24. Ohio Edison Company and Pennsylvania Power Company

[Docket No. ER99–2739–000]

Take notice that on April 30, 1999, Ohio Edison Company tendered for filing on behalf of itself and Pennsylvania Power Company, a Service Agreement with Public Service Electric and Gas Company under Ohio Edison's Power Sales Tariff. This filing is made pursuant to Section 205 of the Federal Power Act.

Comment date: May 20, 1999, in accordance with Standard Paragraph E at the end of this notice.

25. New England Power Pool

[Docket No. ER99–2740–000]

Take notice that on April 30, 1999, the New England Power Pool (NEPOOL or Pool), Executive Committee filed a request for termination of membership in NEPOOL, with an effective date of May 1, 1999, of NP Energy, Inc. (NP). Such termination is pursuant to the terms of the NEPOOL Agreement dated September 1, 1971, as amended, and previously signed by NP. The New England Power Pool Agreement, as amended (the NEPOOL Agreement), has been designated NEPOOL FPC No. 2.

The Executive Committee states that termination of NP with an effective date of May 1, 1999 would relieve this entity, at NP's request, of the obligations and responsibilities of Pool membership and would not change the NEPOOL Agreement in any manner, other than to remove NP from membership in the Pool.

Comment date: May 20, 1999, in accordance with Standard Paragraph E at the end of this notice.

26. Allegheny Power Service Corp., on behalf of Monongahela Power Co., The Potomac Edison Co., and West Penn Power Co. (Allegheny Power)

[Docket No. ER99–2741–000]

Take notice that on April 30, 1999, Allegheny Power Service Corporation on behalf of Monongahela Power Company, The Potomac Edison Company and West Penn Power Company (Allegheny Power), filed Supplement No. 53 to add Cleco Corporation to Allegheny Power Open Access Transmission Service Tariff which has been accepted for filing by the Federal Energy Regulatory Commission in Docket No. ER96–58–000. The proposed effective date under the Service Agreement is April 29, 1999.

Copies of the filing have been provided to the Public Utilities Commission of Ohio, the Pennsylvania Public Utility Commission, the Maryland Public Service Commission, the Virginia State Corporation Commission, and the West Virginia Public Service Commission.

Comment date: May 20, 1999, in accordance with Standard Paragraph E at the end of this notice.

27. New England Power Pool

[Docket No. ER99–2742–000]

Take notice that on April 30, 1999, the New England Power Pool (NEPOOL or Pool), Executive Committee filed a request for termination of membership in NEPOOL, with an effective date of May 1, 1999, of COM/Energy Marketing, Inc. (CEM). Such termination is pursuant to the terms of the NEPOOL Agreement dated September 1, 1971, as amended, and previously signed by CEM. The New England Power Pool Agreement, as amended (the NEPOOL Agreement), has been designated NEPOOL FPC No. 2.

The Executive Committee states that termination of CEM with an effective date of May 1, 1999 would relieve this entity, at CEM's request, of the obligations and responsibilities of Pool membership and would not change the NEPOOL Agreement in any manner, other than to remove CEM from membership in the Pool.

Comment date: May 20, 1999, in accordance with Standard Paragraph E at the end of this notice.

28. Duke Energy Corporation

[Docket No. ER99–2743–000]

Take notice that on April 30, 1999, Duke Energy Corporation tendered a Termination Notice pursuant to 18 CFR 35.15, to terminate Schedule FERC No. 10 (Service Schedule J), approved by Commission's Letter Order issued January 21, 1992, in Docket Nos. ER89–106–000 and EL91–55–000.

Comment date: May 31, 1999, in accordance with Standard Paragraph E at the end of this notice.

29. Consolidated Edison Company Of New York, Inc.

[Docket No. ER99–2747–000]

Take notice that on April 30, 1999, Consolidated Edison Company of New York, Inc. (Con Edison), tendered for filing, pursuant to its FERC Electric Tariff Rate Schedule No. 3, a service agreement for 1st Rochdale Cooperative Group, Ltd. to purchase electric capacity and energy pursuant at negotiated rates, terms, and conditions.

Con Edison states that a copy of this filing has been served by mail upon 1st Rochdale Cooperative Group, Ltd.

Comment date: May 20, 1999, in accordance with Standard Paragraph E at the end of this notice.

30. Consolidated Edison Company of New York, Inc.

[Docket No. ER99–2748–000]

Take notice that on April 30, 1999, Consolidated Edison Company of New York, Inc. (Con Edison), tendered for filing, pursuant to its FERC Electric Tariff Rate Schedule No. 3, a service agreement for Columbia Energy Power Marketing Corporation to purchase electric capacity and energy pursuant at negotiated rates, terms, and conditions.

Con Edison states that a copy of this filing has been served by mail upon Columbia Energy Power Marketing Corporation.

Comment date: May 20, 1999, in accordance with Standard Paragraph E at the end of this notice.

31. Consolidated Edison Company of New York, Inc.

[Docket No. ER99–2749–000]

Take notice that on April 30, 1999, Consolidated Edison Company of New York, Inc. (Con Edison), tendered for filing, pursuant to its FERC Electric Tariff Rate Schedule No. 3, a service agreement for DukeSolutions, Inc. to purchase electric capacity and energy pursuant at negotiated rates, terms, and conditions.

Con Edison states that a copy of this filing has been served by mail upon DukeSolutions, Inc.

Comment date: May 20, 1999, in accordance with Standard Paragraph E at the end of this notice.

32. Consolidated Edison Company of New York, Inc.

[Docket No. ER99–2750–000]

Take notice that on April 30, 1999, Consolidated Edison Company of New York, Inc. (Con Edison), tendered for filing, pursuant to its FERC Electric Tariff Rate Schedule No. 3, a service agreement for Central Hudson Enterprises Corporation to purchase electric capacity and energy pursuant at negotiated rates, terms, and conditions.

Con Edison states that a copy of this filing has been served by mail upon Central Hudson Enterprises Corporation.

Comment date: May 20, 1999, in accordance with Standard Paragraph E at the end of this notice.

33. Consolidated Edison Company of New York, Inc.

[Docket No. ER99–2751–000]

Take notice that on April 30, 1999, Consolidated Edison Company of New York, Inc. (Con Edison), tendered for filing, pursuant to its FERC Electric Tariff Rate Schedule No. 2, a service agreement for DukeSolutions, Inc. to purchase electric capacity and energy pursuant at negotiated rates, terms, and conditions.

Con Edison states that a copy of this filing has been served by mail upon DukeSolutions, Inc.

Comment date: May 20, 1999, in accordance with Standard Paragraph E at the end of this notice.

34. Consolidated Edison Company of New York, Inc.

[Docket No. ER99–2752–000]

Take notice that on April 30, 1999, Consolidated Edison Company of New York, Inc. (Con Edison), tendered for filing a service agreement to provide firm transmission service pursuant to its Open Access Transmission Tariff to the New York Power Authority (NYPA).

Con Edison states that a copy of this filing has been served by mail upon NYPA.

Comment date: May 20, 1999, in accordance with Standard Paragraph E at the end of this notice.

35. PP&L, Inc.

[Docket No. ER99–2757–000]

Take notice that on April 30, 1999, PP&L, Inc. (PP&L), tendered for filing an Interconnection Agreement and Addendum to Interconnection Agreement between PP&L and Statoil Energy/Paxton, LP.

Comment date: May 20, 1999, in accordance with Standard Paragraph E at the end of this notice.

36. Sunlaw Energy Partners I, L.P.

[Docket No. ER99–2758–000]

Take notice that on April 30, 1999, Sunlaw Energy Partners I, L.P., tendered for filing a Notice of Succession pursuant to 18 CFR 35.51 to reflect its name change from Sunlaw Cogeneration Partners I.

Comment date: May 20, 1999, in accordance with Standard Paragraph E at the end of this notice.

37. Duke Energy Corporation

[Docket No. ER99–2759–000]

Take notice that on April 30, 1999, Duke Energy Corporation tendered a Termination Notice pursuant to 18 CFR 35.15, to terminate Schedule FERC No. 10 (Service Schedule G), Docket No. ER88–169–000.

Comment date: May 20, 1999, in accordance with Standard Paragraph E at the end of this notice.

38. Southwest Power Pool

[Docket No. ER99–2760–000]

Take notice that on April 30, 1999, Southwest Power Pool (SPP), tendered for filing an executed service agreement with LG&E Energy Marketing Inc. for loss compensation service under the SPP Tariff. SPP requests an effective date of April 1, 1999 for each of this agreement.

Copies of this filing were served upon all signatories.

Comment date: May 20, 1999, in accordance with Standard Paragraph E at the end of this notice.

39. The Cincinnati Gas & Electric Company

[Docket No. ER99–2764–000]

Take notice that on April 30, 1999, The Cincinnati Gas & Electric Company, in compliance with the Commission's Orders dated August 16, 1993 and October 3, 1994 in Docket Nos. EC93–6–000, EC93–6–001 and ER94–1015–000 tendered for filing its fifth Annual Informational Filing.

Comment date: May 20, 1999, in accordance with Standard Paragraph E at the end of this notice.

40. PSI Energy, Inc.

[Docket No. ER99–2765–000]

Take notice that on April 30, 1999, PSI Energy, Inc., in compliance with the Commission's Orders dated August 16, 1993 and October 3, 1994 in Docket Nos. EC93–6–000, EC93–6–001 and ER94-1015–000, tendered for filing its fifth Annual Informational Filing.

Comment date: May 20, 1999, in accordance with Standard Paragraph E at the end of this notice.

41. James E. Abel; John R. Biggar; Robert J. Grey; William F. Hecht; Francis A. Long

[Docket Nos. ID–3281–000; D–3282–000; ID–3283–000; ID–3284–000; ID–2818–001]

Take notice that on April 30, 1999, the following Officers and/or Directors of PP&L EnergyPlus Co., filed with the Federal Energy Regulatory Commission Abbreviated Applications for Authorization to Hold Interlocking Positions pursuant to Section 305(b) of the Federal Power Act and pursuant to the Commission's order in PP&L EnergyPlus Company, 85 FERC ¶ 61,377 (1998):

James E. Abel
John R. Biggar
Robert J. Grey
William F. Hecht
Francis A. Long

Comment date: May 31, 1999, in accordance with Standard Paragraph E at the end of this notice.

42. Richard B. Bates; Steven C. Voorhees; Michael G. Byrne; John M. Musgrave; Donna J. Bailey

[Docket Nos. ID–3285–000; ID–3286–000; ID–3287–000; ID–3288–000; ID–3289–000]

Take notice that on April 30, 1999, West Georgia Generating Company L.P., a partnership, with its principal place of business at 1900 5th Avenue North, Birmingham, Alabama 35203, filed with the Federal Energy Regulatory Commission an application for authority to hold interlocking positions on behalf of its directors and officers (Applicants) listed above, under Section 305(b) of the Federal Power Act, 16 U.S.C. § 825(b).

Comment date: May 31, 1999, in accordance with Standard Paragraph E at the end of this notice.

Standard Paragraphs

Any person desiring to be heard or to protest such filing should file a motion to intervene or protest with the Federal Energy Regulatory Commission, 888 First Street, N.E., Washington, D.C. 20426, in accordance with Rules 211 and 214 of the Commission's Rules of Practice and Procedure (18 CFR 385.211 and 385.214). All such motions or protests should be filed on or before the comment date. Protests will be considered by the Commission in determining the appropriate action to be taken, but will not serve to make protestants parties to the proceeding. Any person wishing to become a party must file a motion to intervene. Copies of these filings are on file with the

Commission and are available for public inspection. This filing may also be viewed on the Internet at http://www.ferc.fed.us/online/rims.htm (call 202–208–2222 for assistance).

David P. Boergers,

Secretary.

[FR Doc. 99–12240 Filed 5–13–99; 8:45 am]

BILLING CODE 6717–01–P

DEPARTMENT OF ENERGY

Federal Energy Regulatory Commission

[Docket No. EG99–128–000, et al.]

Milliken Facility Trust B–1, et al.; Electric Rate and Corporate Regulation Filings

May 7, 1999.

Take notice that the following filings have been made with the Commission:

1. Milliken Facility Trust B–1

[Docket No. EG99–128–000]

Take notice that on May 4, 1999, Milliken Facility Trust B–1 (the Applicant) filed with the Federal Energy Regulatory Commission an application for determination of exempt wholesale generator status pursuant to part 365 of the Commission's regulations.

The Applicant is a Delaware business trusts who will purchase and lease the Milliken Generating Station (the Facility) to AES Eastern Energy, L.P., who will operate the Facility. The Facility is located at 228 Milliken Road, Lansing, New York 14882 and is comprised of two steam turbine generating units with a maximum of 306 MW of generating capacity.

Comment date: May 28, 1999, in accordance with Standard Paragraph E at the end of this notice. The Commission will limit its consideration of comments to those that concern the adequacy or accuracy of the application.

2. United States Department of Energy; Western Area Power Administration

[Docket No. EF99–5041–000]

Take notice that on May 3, 1999, the Secretary of the Department of Energy, by Rate Order No. WAPA–84, did confirm and approve on an interim basis, to be effective on April 1, 1999, the Western Area Power Administration's (Western) Rate Schedules DSW–SD1, DSW–RS1, DSW–FR1, DSW–EI1, DSW–SPR1, DSW–SUR1, PD–NTS1, and INT–NTS1 for the Desert Southwest Customer Service Region Network Integration Transmission and Ancillary Services.

The formula rates in Rate Schedules DSW–SD1, DSW–RS1, DSW–FR1, DSW–EI1, DSW–SPR1, DSW–SUR1, PD–NTS1, and INT–NTS1 will be in effect from April 1, 1999, through March 31, 2004, pending the Federal Energy Regulatory Commission's (FERC) approval of these or of substitute rates on a final basis.

Comment date: May 28, 1999, in accordance with Standard Paragraph E at the end of this notice.

3. United States Department of Energy; Western Area Power Administration

[Docket No. EF99–5101–000]

Take notice that on May 3, 1999, the Secretary of the Department of Energy, by Rate Order No. WAPA–85, did confirm and approve on an interim basis, to be effective on June 8, 1999, the Western Area Power Administration's (Western) firm power rate formula extension contained in Contract No. 7–07–50–P0890 (Contract) for Amistad and Falcon Projects.

The extension of the rate formula will be in effect on an interim basis pending the Federal Energy Regulatory Commission's (Commission) approval of it or a substitute rate on a final basis.

This repayment schedule is not dependent upon the power and energy made available for sale or the rate of generation each year. Western will continue to provide the projects' two customers with a revised Exhibit A by August 31 of each year using the same methodology which has been set forth unchanged in the Contract since April 10, 1986.

Comment date: May 28, 1999, in accordance with Standard Paragraph E at the end of this notice.

4. Louisville Gas and Electric Co.; Kentucky Utilities Company

[Docket No. ER98–114–001]

Take notice that on May 3, 1999, Louisville Gas and Electric and Kentucky Utilities Company (the Louisville Operating Companies or LOC's), tendered for filing revised tariff sheets for transmission service under its Open Access Transmission Tariff in accordance with the Commission's Order in Docket No. ER98–114–000.

Comment date: May 21, 1999, in accordance with Standard Paragraph E at the end of this notice.

5. Eastern Pacific Energy; U. S. Power & Light, Inc.; LS Power Marketing, LLC; OGE Energy Resources, Inc.; Engage Energy US, L.P.; Anker Power Services, Inc.; Salko Energy Services, Inc.; Columbia Energy Services Corp.; JMF Power Marketing; Northern/AES Energy, LLC; Watt Works, L.L.C.

[Docket Nos. ER98–1829–005, ER96–105–014, ER96–1947–011, ER97–4345–009, ER97–654–009, ER97–3788–006, ER99–1052–001, ER97–3667–006, ER98–3433–003, ER98–445–005, and ER97–2592–008]

Take notice that on May 3, 1999, the above-mentioned power marketers filed quarterly reports with the Commission in the above-mentioned proceedings for information only. These filings are available for public inspection and copying in the Public Reference Room or on the web at www.ferc.fed.us/online/rims.htm for viewing and downloading (call 202–208–2222 for assistance).

6. Central Power and Light Company; West Texas Utilities Company; Public Service Company of Oklahoma, Southwestern Electric Power Co.

[Docket Nos. ER99–1659–001 and ER99–1660–001]

Take notice that on May 3, 1999, Central Power and Light Company, West Texas Utilities Company, Public Service Company of Oklahoma, and Southwestern Electric Power Company (collectively, the CSW Operating Companies) tendered a compliance filing in the above referenced proceeding. Pursuant to the Commission's order in Central Power and Light Co., *et al.*, 87 FERC ¶ 61,001 (1999), the compliance filing (1) amends the unexecuted Network Service Agreement (NSA) and an unexecuted Network Operating Agreement (NOA) between the CSW Operating Companies and Northeast Texas Electric Cooperative, Inc. (NTEC); and (2) amends the NSA and NOA between the CSW Operating Companies and East Texas Electric Cooperative, Inc., (ETEC).

The CSW Operating Companies state that a copy of this filing has been served on each person listed on the official service list in Docket Nos. ER99–1659–000 and ER99–1660–000 (consolidated).

Comment date: May 21, 1999, in accordance with Standard Paragraph E at the end of this notice.

7. Aquila Energy Marketing Corporation; Reliant Energy Services, Inc.

[Docket Nos. ER99–1751–001 and ER99–1801–001]

Take notice that on April 30, 1999, the above-mentioned power marketers

filed quarterly reports with the Commission in the above-mentioned proceedings for information only. These filings are available for public inspection and copying in the Public Reference Room or on the web at www.ferc.fed.us/online/rims.htm for viewing and downloading (call 202–208–2222 for assistance).

8. SEI Wisconsin, L.L.C.

[Docket No. ER99–2676–000]

Take notice that on April 28, 1999, the above-mentioned affiliated power producer and/or public utility filed their quarterly report for the quarter ending March 31, 1999.

Comment date: May 18, 1999, in accordance with Standard Paragraph E at the end of this notice.

9. Montana Power Company; Sunlaw Cogeneration Partners I; Northern Indiana Public Service Company; Northeast Utilities Service Company; Southwestern Public Service Company; UtiliCorp United, Inc.; Northeast Utilities Service Company; Northern States Power Company; (Minnesota) Northern States Power Company (Wisconsin); AG Energy, L.P., et al.; The Toledo Edison Company; The Cleveland Electric Illuminating Company; PP&L, Inc.; Alliant Energy Services Company; AYP Energy, Inc.

[Docket Nos. ER99–2684–000, ER99–2685–000, ER99–2686–000, ER99–2687–000, ER99–2688–000, ER99–2689–000, ER99–2690–000, ER99–2693–000, ER99–2694–000, ER99–2695–000, ER99–2696–000, ER99–2697–000, ER99–2701–000, and ER99–2702–000]

Take notice that on April 30, 1999, the above-mentioned affiliated power producers and/or public utilities filed their quarterly reports for the quarter ending March 31, 1999.

Comment date: May 20, 1999, in accordance with Standard Paragraph E at the end of this notice.

10. Reliant Energy Coolwater, LLC; Kincaid Generation L.L.C.; NGE Generation, Inc.; Duke Energy Moss Landing, LLC; Duke Energy Moss Landing, LLC; Duke Energy Morro Bay, LLC; Duke Energy Morro Bay, LLC; Duke Energy Oakland, LLC; Duke Energy Oakland, LLC; PECO Energy Company; Reliant Energy Mandalay, LLC; Millenium Power Partners, L.P.; Logan Generating Company, L.P.; Lakewood Cogeneration, LP; The Dayton Power and Light; Southern Company Services, Inc.; Unitil Power Corp.; Medical Area Total Energy Plant, Inc.; Fitchburg Gas and Electric Light Company; American Electric Power Service Corporation; Duke Power, a Division of Duke Energy Corporation; The Detroit Edison Company; Reliant Energy Ormond Beach, LLC; Reliant Energy Etiwanda, LLC; Reliant Energy Ellwood, LLC; Western Resources, Inc.; EME Homer City Generation, L.P.

[Docket Nos. ER99–2703–000, ER99–2704–000, ER99–2708–000, ER99–2709–000, ER99–2710–000, ER99–2711–000, ER99–2712–000, ER99–2713–000, ER99–2714–000, ER99–2718–000, ER99–2722–000, ER99–2725–000, ER99–2726–000, ER99–2727–000, ER99–2728–000, ER99–2736–000, ER99–2744–000, ER99–2745–000, ER99–2746–000, ER99–2754–000, ER99–2755–000, ER99–2756–000, ER99–2782–000, ER99–2783–000, ER99–2784–000, ER99–2785–000 and ER99–2786–000]

Take notice that on April 30, 1999, the above-mentioned affiliated power producers and/or public utilities filed their quarterly reports for the quarter ending March 31, 1999.

Comment date: May 20, 1999, in accordance with Standard Paragraph E at the end of this notice.

11. New England Power Pool

[Docket No. ER99–2706–000]

Take notice that on April 30, 1999, the New England Power Pool Executive Committee tendered for filing a signature page to the New England Power Pool (NEPOOL Agreement dated September 1, 1971, as amended, signed by Industrial Energy Consumer Group (IECG). The NEPOOL Agreement has been designated NEPOOL FPC No. 2.

The Executive Committee states that the Commission's acceptance of IECG's signature page would permit NEPOOL to expand its membership to include IECG. NEPOOL further states that the filed signature page does not change the NEPOOL Agreement in any manner, other than to make IECG a member in NEPOOL.

NEPOOL requests an effective date of May 1, 1999, for commencement of participation in NEPOOL by IECG.

Comment date: May 20, 1999, in accordance with Standard Paragraph E at the end of this notice.

12. Central Vermont Public Service Corporation

[Docket No. ER99–2766–000]

Take notice that on April 30, 1999, Central Vermont Public Service Corporation (Central Vermont), tendered for filing a Service Agreement with Griffin Energy Marketing, L.L.C., under its FERC Electric Tariff No. 8.

Central Vermont requests waiver of the Commission's Regulations to permit the service agreement to become effective on May 3, 1999.

Comment date: May 20, 1999, in accordance with Standard Paragraph E at the end of this notice.

13. Central Vermont Public Service Corporation

[Docket No. ER99–2767–000]

Take notice that on April 30, 1999, Central Vermont Public Service Corporation (Central Vermont), tendered for filing a Service Agreement with Energy New England, L.L.C., under its FERC Electric Tariff No. 8.

Central Vermont requests waiver of the Commission's regulations to permit the service agreement to become effective on May 3, 1999.

Comment date: May 20, 1999, in accordance with Standard Paragraph E at the end of this notice.

14. Illinois Power Company

[Docket No. ER99–2768–000]

Take notice that on April 30, 1999, Illinois Power Company (Illinois Power), 500 South 27th Street, Decatur, Illinois 62526, tendered for filing updated specification pages to the existing Network Service Agreement under which Cornbelt Energy Company will take transmission service pursuant to its open access transmission tariff. The agreements are based on the Form of Service Agreement in Illinois Power's tariff.

Illinois Power has requested an effective date of April 1, 1999.

Comment date: May 20, 1999, in accordance with Standard Paragraph E at the end of this notice.

15. Foote Creek III, LLC

[Docket No. ER99–2769–000]

Take notice that on April 30, 1999, Foote Creek III, a Delaware limited liability company, tendered for filing pursuant to Rule 205, 18 CFR 285.205, a petition for blanket waivers and blanket approvals under various regulations of the Commission 1999 including authority to sell electricity at

market-based rates and for an order accepting its FERC Electric Rate Schedule No. 1, to be effective on June 30, 1999.

Foote Creek III, LLC's FERC Electric Rate Schedule No. 1, provides for sales under the Wind Agreement between Foote Creek III, LLC and Public Service Company of Colorado. Foote Creek III, LLC is a Delaware limited liability company that proposes to engage in the wholesale sale of Electric power in the state of Wyoming and has its address in San Diego, California.

Comment date: May 20, 1999, in accordance with Standard Paragraph E at the end of this notice.

16. Florida Power & Light Company

[Docket No. ER99–2770–000]

Take notice that on April 30, 1999, Florida Power & Light Company tendered for filing revised depreciation rates and amortization schedules for use in specified formula rates.

Comment date: May 20, 1999, in accordance with Standard Paragraph E at the end of this notice.

17. Consumers Energy Company

[Docket No. ER99–2771–000

Take notice that on May 3, 1999, Consumers Energy Company (Consumers), tendered for filing executed Service Agreements for Network Integration Transmission Service pursuant to Consumers' Open Access Transmission Service Tariff and Network Operating Agreements with General Motors Corporation—Flint West—GM Plant 38; Delphi Automotive Systems—Flint West—Plant 4; and Delphi Automotive Systems—Flint West—Plant 10 (Customers), all with effective dates of April 27, 1999 and service starting May 1, 1999.

Copies of the filed agreements were served upon the Michigan Public Service Commission and the Customers.

Comment date: May 21, 1999, in accordance with Standard Paragraph E at the end of this notice.

18. Dearborn Industrial Generation, L.L.C.

[Docket No. ER99–2773–000]

Take notice that on May 3, 1999, Dearborn Industrial Generation, L.L.C. (DIG), tendered for filing a wholesale power sales tariff to permit DIG to make wholesale electric generation sales to eligible customers at up to cost-based ceiling rates.

DIG requests an effective date of June 15, 1999.

Copies of this filing were served upon the Michigan Public Service Commission.

Comment date: May 21, 1999, in accordance with Standard Paragraph E at the end of this notice.

19. Duke Energy Trading and Marketing, L.L.C.

[Docket No. ER99–2774–000]

Take notice that on May 3, 1999, Duke Energy Trading and Marketing, L.L.C. (DETM), tendered for filing a Notice of Succession with the Federal Energy Regulatory Commission indicating that the name of NP Energy Inc., has been changed to Duke Energy Trading and Marketing, L.L.C., effective March 31, 1999. In accordance with Sections 35.16 and 131.51 of the Commission's regulations, 18 CFR 35.16, 131.51, DETM adopted and ratified all applicable rate schedules filed with the FERC by NP Energy Inc.

Comment date: May 21, 1999, in accordance with Standard Paragraph E at the end of this notice.

20. Arizona Public Service Company

[Docket No. ER99–2775–000]

Take notice that on May 3, 1999, Arizona Public Service Company (APS), tendered for filing notice that effective at midnight the March 31, 1998, Rate Schedule FERC No. 74, effective date August 1, 1979 by order dated July 26, 1979 and filed with the Federal Energy Regulatory Commission by Arizona Public Service Company is to be canceled.

The proposed cancellation has been served upon the Town of Wickenburg, the Arizona Corporation Commission, and the Arizona Public Service Company.

Comment date: May 21, 1999, in accordance with Standard Paragraph E at the end of this notice.

21. Ameren Operating Companies

[Docket No. ER99–2776–000]

Take notice that on May 3, 1999, Ameren Services Company, on behalf of the Ameren Operating Companies, Union Electric Company and Central Illinois Public Service Company, tendered for filing proposed changes to the Ameren System's Open Access Transmission Tariff (OATT). Ameren Services states that the proposed changes are designed to implement retail access in the State of Illinois in accordance with its Electric Service Customer Choice and Rate Relief Law of 1997. The changes add appropriate retail transmission and ancillary services rates, stated as energy charges in cents per kilowatt hour, to be charged to retail access customers.

Ameren Services requests that the proposed changes become effective on July 3, 1999.

Ameren Services states that copies of the proposed changes were served on the Illinois Commerce Commission.

Comment date: May 21, 1999, in accordance with Standard Paragraph E at the end of this notice.

22. Boston Edison Company

[Docket No. ER99–2777–000]

Take notice that on May 3, 1999, Boston Edison Company (Boston Edison), tendered for filing for information purposes the 1997 true-up to actual for the Substation 402 Agreement (FPC Rate Schedule No. 149) between Boston Edison and Cambridge Electric Light Company (Cambridge). This filing is made pursuant to the terms of the 1987 Settlement Agreement between Boston Edison, Cambridge and the Town of Belmont, Massachusetts in Docket No. ER86–517–000.

Boston Edison states that it has served the filing on Cambridge, Belmont and the Massachusetts Department of Telecommunications and Energy.

Comment date: May 21, 1999, in accordance with Standard Paragraph E at the end of this notice.

23. GEN–SYS Energy

[Docket No. ER99–2795–000]

Take notice that on May 3, 1999, the above-mentioned affiliated power producer and/or public utility filed their quarterly report for the quarter ending March 31, 1999.

Comment date: May 24, 1999, in accordance with Standard Paragraph E at the end of this notice.

24. Northeast Utilities Service Company

[Docket No. ER99–2803–000]

Take notice that on May 3, 1999, Northeast Utilities Service Company (NUSCO), tendered for filing a Service Agreement to provide Network Integration Transmission Service to Chester Municipal Electric Light Department under the NU System Companies' Open Access Transmission Service Tariff No. 9.

NUSCO states that a copy of this filing has been mailed to Chester Municipal Electric Light Department.

NUSCO requests that the Service Agreement become effective April 1, 1998.

Comment date: May 21, 1999, in accordance with Standard Paragraph E at the end of this notice.

25. Long Island Power Authority; Long Island Lighting Company; South Carolina Public Service Authority

[Docket Nos. NJ98–4–002 and NJ97–8–004]

Take notice that between April 30–May 3, 1999, the above-named utilities

filed revised standards of conduct in response to the Commission's April 1, 1999 Orders on Standards of Conduct. 87 FERC ¶¶ 61,002 and 61,013 (1999).

Comment date: May 24, 1999, in accordance with Standard Paragraph E at the end of this notice.

Standard Paragraphs

E. Any person desiring to be heard or to protest such filing should file a motion to intervene or protest with the Federal Energy Regulatory Commission, 888 First Street, N.E., Washington, D.C. 20426, in accordance with Rules 211 and 214 of the Commission's Rules of Practice and Procedure (18 CFR 385.211 and 385.214). All such motions or protests should be filed on or before the comment date. Protests will be considered by the Commission in determining the appropriate action to be taken, but will not serve to make protestants parties to the proceeding. Any person wishing to become a party must file a motion to intervene. Copies of these filings are on file with the Commission and are available for public inspection. This filing may also be viewed on the Internet at http://www.ferc.fed.us/ online/rims.htm (call 202–208–2222 for assistance).

David P. Boergers,

Secretary.

[FR Doc. 99–12187 Filed 5–13–99; 8:45 am]

BILLING CODE 6717–01–P

DEPARTMENT OF ENERGY

Federal Energy Regulatory Commission

[Docket No. ER99–2590–000, et al.]

Potomac Electric Power Company, et al.; Electric Rate and Corporate Regulation Filings

May 4, 1999.

Take notice that the following filings have been made with the Commission:

1. Potomac Electric Power Company

[Docket No. ER99–2590–000]

Take notice that on April 26, 1999 the above-mentioned public utilities filed their quarterly transaction report for the first quarter ending December 31, 1998.

Comment date: May 17, 1999, in accordance with Standard Paragraph E at the end of this notice.

2. C.C. Pace Resources, Inc. and SEI Wisconsin, L.L.C.

[Docket Nos. ER94–1181–019 and ER99–669–002]

Take notice that on April 28, 1999, the above-mentioned power marketers filed quarterly reports with the Commission in the above-mentioned proceedings for information only. These filings are available for public inspection and copying in the Public Reference Room or on the web at www.ferc.fed.us/online/rims.htm for viewing and downloading (call 202–208–2222 for assistance).

3. Southern Energy New England, L.L.C.; New Energy Ventures, Inc.; Fina Energy Services Company; Sithe Power Marketing, Inc.; NEV East, L.L.C.; NEV Midwest, L.L.C.; New Energy Partners, L.L.C.; NEV California, L.L.C.; Avista Energy, Inc.; Panda Power Corporation; Tenaska Power Services Co.; CoEnergy Trading Company; Enserch Energy Services, Inc.; DukeSolution, Inc.

[Docket Nos. ER98–4118–003; ER98–4118–004; ER97–4636–006; ER97–2413–008; ER98–107–006; ER97–4652–006; ER97–4654–006; ER99–1812–001; ER97–4653–006; ER96–2408–012; ER98–447–005; ER94–389–019; ER96–1040–014; ER98–895–005 and ER98–3813–003]

Take notice that on April 29, 1999, the above-mentioned power marketers filed quarterly reports with the Commission in the above-mentioned proceedings for information only. These filings are available for public inspection and copying in the Public Reference Room or on the web at www.ferc.fed.us/online/rims.htm for viewing and downloading (call 202–208–2222 for assistance).

4. Commonwealth Edison Company; Yadkin, Inc.; Atlantic City Electric Company; Portland General Electric Company; Indeck-Pepperell Power Associates, Inc.; PacifiCorp

[Docket Nos. ER99–2591–000, ER99–2599–000, ER99–2600–000; ER99–2603–000, ER99–2604–000, and ER99–2606–000]

Take notice that on April 26, 1999, the above-mentioned public utilities filed their quarterly transaction report for the first quarter ending March 31, 1999.

Comment date: May 17, 1999, in accordance with Standard Paragraph E at the end of this notice.

5. Westchester RESCO Company, L.P. Allegheny Power

[Docket Nos. ER99–2614–000 and ER99–2616–000]

Take notice that on April 27, 1999, the above-mentioned public utilities filed their quarterly transaction report for the first quarter ending March 31, 1999.

Comment date: May 17, 1999, in accordance with Standard Paragraph E at the end of this notice.

California Power Exchange Corporation

[Docket No. ER99–2635–000]

Take notice that on April 28, 1999, the California Power Exchange Corporation (PX) submitted quarterly reports for the quarter ending March 31, 1999, identifying each customer that is subject to a PX Participation Agreement and each customer that is subject to a PX Meter Services Agreement.

Comment date: May 18, 1999, in accordance with Standard Paragraph E at the end of this notice.

7. Rochester Gas and Electric Corporation; Tucson Electric Power Company; Tucson Electric Power Company

[Docket Nos. ER99–2645–000, ER99–2637–000 and ER99–2646–000]

Take notice that on April 28, 1999, the above-mentioned public utilities filed their quarterly transaction report for the first quarter ending March 31, 1999.

Comment date: May 18, 1999, in accordance with Standard Paragraph E at the end of this notice.

8. State Line Energy, L.L.C.; Southern Energy Kendall, L.L.C.; Southern Energy Kendall, L.L.C.; Southern Energy Canal, L.L.C.; Southern Energy Canal, L.L.C.

[Docket Nos. ER99–2650–000, ER99–2651–000, ER99–2652–000, ER99–2653–000, ER99–2654–000]

Take notice that on April 29, 1999, the above-mentioned Affiliated Power Producers filed quarterly reports for the quarter ending March 31, 1999.

Comment date: May 19, 1999, in accordance with Standard Paragraph E at the end of this notice.

9. Avista Corporation; Central Vermont Public Service Corporation; Virginia Electric and Power Company

[Docket Nos. ER99–2672–000, ER99–2673–000 and ER99–2675–000]

Take notice that on April 29, 1999, the above-mentioned public utilities filed their quarterly transaction report for the first quarter ending March 31, 1999.

Comment date: May 19, 1999, in accordance with Standard Paragraph E at the end of this notice.

Standard Paragraphs

E. Any person desiring to be heard or to protest such filing should file a motion to intervene or protest with the Federal Energy Regulatory Commission, 888 First Street, N.E., Washington, D.C. 20426, in accordance with Rules 211 and 214 of the Commission's Rules of Practice and Procedure (18 CFR 385.211

and 385.214). All such motions or protests should be filed on or before the comment date. Protests will be considered by the Commission in determining the appropriate action to be taken, but will not serve to make protestants parties to the proceeding. Any person wishing to become a party must file a motion to intervene. Copies of these filings are on file with the Commission and are available for public inspection. This filing may also be viewed on the Internet at http://www.ferc.fed.us/ online/rims.htm (call 202–208–2222 for assistance).

David P. Boergers,

Secretary.

[FR Doc. 99–12186 Filed 5–13–99; 8:45 am]

BILLING CODE 6717–01–U

DEPARTMENT OF ENERGY

Federal Energy Regulatory Commission

Notice of Transfer of License and Soliciting Comments, Motions To Intervene, and Protests

May 10, 1999.

Take notice that the following application has been filed with the Commission and is available for public inspection:

a. *Application Type:* Transfer of License.

b. *Project No:* 5–048.

c. *Date Filed:* April 23, 1999.

d. *Applicants:* Montana Power Company (MPC), PP&L Montana, LLC (PPLM), and the Confederated Salish and Kootenai Tribes of the Flathead Reservation (Tribes).

e. *Name and Location of Project:* The Kerr Hydroelectric Project is on the Flathead River in Lake and Flathead Counties, Montana. The project occupies (1) tribal lands within the Flathead Reservation, (2) federal lands administered by the Bureau of Land Management, and (3) federal lands within Flathead and Lolo National Forests.

f. *Filed Pursuant to:* Federal Power Act, 16 U.S.C. 801.

g. *Applicant Contacts:* For MPC: Mr. Michael P. Manion, The Montana Power Company, 40 East Broadway, Butte, MT 59701, (406) 497–2456 and Mr. Nicholas W. Fels, Covington & Burling, P.O. Box 7655, 201 Pennsylvania Ave., NW, Washington, DC 20044–7566, (202) 662–5648. For PPLM: Mr. Robert W. Burke, Jr., PP&L Global, Inc., 11350 Random Hills Road, Fairfax, VA 22030–6044, (703) 293–2617 and Mr. David R. Poe, LeBoeuf, Lamb, Greene & MacRae, LLP, 1875 Connecticut Ave., NW, Suite 1200, Washington, DC 20009–5728, (202) 986–8039. For the Tribes: Mr. Mickey Pablo, Chairman, The Confederated Salish and Kootenai Tribes of the Flathead Reservation, P.O. Box 278, Pablo, MT 59855, (406) 675–2700 and Mr. Joe Hovenkotter, The Confederated Salish and Kootenai Tribes of the Flathead Reservation Legal Department, P.O. Box 278, Pablo, MT 59855, (406) 675–2700, Ext. 1169.

h. *FERC Contact:* Any questions on this notice should be addressed to James Hunter at (202) 219–2839, or e-mail address: james.hunter@ferc.fed.us.

i. *Deadline for filing comments and or motions:* June 3, 1999.

All documents (original and eight copies) should be filed with: David P. Boergers, Secretary, Federal Energy Regulatory Commission, 888 First Street, N.E., Washington, D.C. 20426.

Please include the project number (P–5–048) on any comments or motions filed.

j. *Description of Proposal:* Transfer of MPC's interest in the license for this project to PPLM is being sought in connection with PPLM's purchase of certain generation assets from MPC.

k. *Locations of the application:* A copy of the application is available for inspection and reproduction at the Commission's Public Reference Room, located at 888 First Street, NE, Room 2A, Washington, D.C. 20426, or by calling (202) 208–1371. The application may be viewed on the web at http//www.ferc.fed.us/online/rims.htm (call (202) 208–2222 for assistance). A copy is also available for inspection and reproduction at the addresses in item g above.

l. *Individuals desiring to be included on the Commission's mailing list should so indicate by writing to the Secretary of the Commission.*

Comments, Protests, or Motions to Intervene—Anyone may submit comments, a protest, or a motion to intervene in accordance with the requirements of Rules of Practice and Procedure, 18 CFR 385.210, .211 and .214. In determining the appropriate action to take, the Commission will consider all protests or other comments filed, but only those who file a motion to intervene in accordance with the Commission's Rules may become a party to the proceeding. Any comments, protests, or motions to intervene must be received on or before the specified comment date for the particular application.

Filing and Service of Responsive Documents—Any filings must bear in all capital letters the title ''COMMENTS'', ''RECOMMENDATIONS FOR TERMS AND CONDITIONS'', ''PROTEST'', or ''MOTION TO INTERVENE'', as applicable, and the Project Number of the particular application to which the filing refers. Any of the above-named documents must be filed by providing the original and the number of copies provided by the Commission's regulations to: The Secretary at the above-mentioned address. A copy of any motion to intervene must also be served upon each representative of the Applicant specified in the particular application.

Agency Comments—Federal, state, and local agencies are invited to file comments on the described application. A copy of the application may be obtained by agencies directly from the Applicant. If an agency does not file comments within the time specified for filing comments, it will be presumed to have no comments. One copy of an agency's comments must also be sent to the Applicant's representatives.

David P. Boergers,

Secretary.

[FR Doc. 99–12193 Filed 5–13–99; 8:45 am]

BILLING CODE 6717–01–M

DEPARTMENT OF ENERGY

Federal Energy Regulatory Commission

Notice of Surrender of License and Application to Amend License, and Soliciting Comments, Motions To Intervene, and Protests

May 10, 1999.

a. *Application Type:* Application to Amend License for the Echo Project and Surrender License for the East Canyon Project.

b. *Project Nos:* 3755–011 and 3756–012.

c. *Date Filed:* April 9, 1999.

d. *Applicant:* City of Bountiful, Utah.

e. *Name of Projects:* Echo and East Canyon Projects.

f. *Location:* The Echo Project is on the Weber River in Summit County, Utah. The East Canyon Project is authorized to be on East Canyon Creek, a tributary of the Weber River, in Morgan County, Utah. Both projects utilize a U.S. Bureau of Reclamation dam and reservoir.

g. *Filed Pursuant to:* Federal Power Act, 16 U.S.C. § 791(a)–825(r).

h. *Applicant Contact:* Mr. Clifford Michaelis, City of Bountiful Light & Power, 198 South 200 West, Bountiful, UT 84010, (801) 298–6072.

i. *FERC Contact:* Any questions on this notice should be addressed to Paul Shannon at (202) 219–2866 or by e-mail at paul.shannon@ferc.fed.us.

j. *Deadline for filing comments and/or motions:* June 17, 1999.

All documents (original and eight copies) should be filed with: David P. Boergers, Secretary, Federal Energy Regulatory Commission, 888 First Street, N.E., Washington, D.C. 20426.

Please include the project numbers (3755–011 and 3756–012) on any comments or motions filed.

k. *Description of Filing:* The City of Bountiful, Utah, (City) applied to amend the license of the Echo Project to include within the project boundary an existing 18-mile-long transmission line extending from the East Canyon Dam to Bountiful. The transmission line was originally licensed as part of the East Canyon Project and was the only feature of the East Canyon Project constructed. The 18-mile-long transmission line is a part of the existing 30.5-mile-long transmission line between the Echo Project and Bountiful.

The City also proposes not to construct the remaining project features of the East Canyon Project and surrender the license. The East Canyon Project is licensed to use the existing U.S. Bureau of Reclamation's (Bureau) East Canyon Dam and Reservoir. The City reports that in May 1988, the Bureau notified the City it would not permit the construction of the hydroelectric project until certain dam safety issues were resolved. The City states the Bureau has not fully resolved the dam safety issues, to date. The City maintains that uncertainties regarding the dam's stability make it difficult or impossible to secure adequate financing to develop the project.

l. *Locations of the Application:* A copy of the application is available for inspection and reproduction at the Commission's Public Reference Room, located at 888 First Street, N.E., Room 2A, Washington, D.C. 20426, or by calling (202) 208–1371. This filing may be viewed on http://www.ferc.fed.us/online/rims.htm (call (202) 208–2222 for assistance. A copy is also available for inspection and reproduction at the address in items h above.

m. *Individuals desiring to be included on the Commission's mailing list should so indicate by writing to the Secretary of the Commission.*

Comments, Protests, or Motions to Intervene—Anyone may submit comments, a protest, or a motion to intervene in accordance with the requirements of Rules of Practice and Procedure, 18 CFR 385.210, .211 and .214. In determining the appropriate action to take, the Commission will consider all protests or other comments filed, but only those who file a motion to intervene in accordance with the Commission's Rules may become a party to the proceeding. Any comments, protests, or motions to intervene must be received on or before the specified comment date for the particular application.

Filing and Service of Responsive Documents—Any filing must bear in all capital letters the title ''COMMENTS'', ''RECOMMENDATIONS FOR TERMS AND CONDITIONS'', ''PROTEST'', OR ''MOTION TO INTERVENE'', as applicable, and the Project Number of the particular application to which the filing refers. Any of the above-named documents must be filed by providing the original and the number of copies provided by the Commission's regulations to: The Secretary at the above-mentioned address. A copy of any motion to intervene must also be served upon each representative of the Applicant specified in the particular application.

Agency Comments—Federal, state, and local agencies are invited to file comments on the described application. A copy of the application may be obtained by agencies directly from the Applicant. If an agency does not file comments within the time specified for filing comments, it will be presumed to have no comments. One copy of an agency's comments must also be sent to the Applicant's representatives.

David P. Boergers,

Secretary.

[FR Doc. 99–12194 Filed 5–13–99; 8:45 am]

BILLING CODE 6717–01–M

ENVIRONMENTAL PROTECTION AGENCY

[FRL–6341–7]

Agency Information Collection Activities: Proposed Collection; Comment Request; 1999 EPCRA Implementation Status Questionnaire for State Emergency Response Commissions (SERCs), Local Emergency Planning Committees (LEPCs) and California Certified Unified Program Agencies (CUPAs)

AGENCY: Environmental Protection Agency (EPA).

ACTION: Notice.

SUMMARY: In compliance with the Paperwork Reduction Act (44 U.S.C. 3501 *et seq.*), this document announces that EPA is planning to submit the following proposed Information Collection Request (ICR) to the Office of Management and Budget (OMB): 1999 EPCRA Implementation Status Questionnaire for State Emergency Response Commissions (SERCs), Local Emergency Planning Committees (LEPCs) and California Certified Unified Program Agencies (CUPAs), EPA ICR No. 1905.01. Before submitting the ICR to OMB for review and approval, EPA is soliciting comments on specific aspects of the proposed information collection as described below.

DATES: Comments must be submitted on or before July 13, 1999.

ADDRESSES: United States Environmental Protection Agency, Region IX, ATTN: Lauren Volpini, EPCRA Enforcement and Compliance Program Manager, 75 Hawthorne Street, Mailstop: SFD–1–2, San Francisco, CA 94105.

FOR FURTHER INFORMATION CONTACT: Lauren Volpini, (415) 744–2333 or via electronic mail at volpini.lauren@epa.gov.

SUPPLEMENTARY INFORMATION: Affected entities: Entities potentially affected by this action are state and local emergency planning organizations, each of which could be considered a ''small entity.'' Therefore, establishing differing requirements and/or exemptions from coverage is not practicable. However, Region IX will make every effort to minimize ''the burden on persons who shall provide information.'' This will be accomplished by ensuring that the questionnaire is as concise as practicable, the instructions clarify the respondent's burden, and the survey questions are simple to answer with information that is readily available to the respondent.

The perception of burden is inherently reduced by the fact that participation in this information collection is voluntary, which will be clearly stated at the beginning of the survey.

Title: 1999 EPCRA Implementation Status Questionnaire for State Emergency Response Commissions (SERCs), Local Emergency Planning Committees (LEPCs) and California Certified Unified Program Agencies (CUPAs), EPA ICR No. 1905.01.

Abstract: The Environmental Protection Agency, Region IX, proposes to conduct a Regional survey of State Emergency Response Commissions (SERCs), Local Emergency Planning Committees (LEPCs) and California Certified Unified Program Agencies (CUPAs). The information collected in this survey will be used to assess the general progress, status, and activity level of SERCs, LEPCs and CUPAs. The information will also be used by Region IX staff to have a better understanding of their Region's actual implementation of EPCRA.

The Emergency Planning and Community Right-to-Know Act of 1986 (EPCRA) introduced a fundamental change in the regulation of chemical facilities and the prevention of and preparedness for chemical accidents. This law seeks to improve emergency preparedness and reduce the risk of chemical accidents by providing information to citizens about the chemicals in their community. EPCRA is premised on the concept that the more informed local citizens are about chemical hazards in their communities the more involved they will be in prevention and preparedness activities. For this ''informational regulation'' to be effective, the public must receive accurate and reliable information, which is easy to understand and practical to use. EPCRA sought to create partnerships between all levels of government, the public and the regulated community to identify, prevent, plan, prepare and respond to hazardous material risks in our communities, and the purpose of this survey is to obtain input from these organizations to improve Region IX's EPCRA program.

The key obligations of each of the EPCRA partners include the following. Every Governor was to appoint a SERC, and every SERC was to establish one or more LEPCs. Every facility subject to EPCRA (including Federal installations) is required to submit annual chemical inventory reports to their SERC, LEPC and local Fire Departments. Upon release of a hazardous substance into the environment, immediate notification and written follow-up reports must be made to the SERC, LEPC and the National Response Center (NRC). Information generated by the SERCs, LEPCs and facilities is to be made available to the public upon request. In California, many of the responsibilities of an LEPC are met by the CUPAs and other designated local agencies. The Governor's Office of Emergency Services (State OES) has traditionally served as the point of contact for the SERC in California under EPCRA.

Region IX's role has been to provide guidance and assistance to SERCs, LEPCs, emergency responders, the regulated community and the public as well as take enforcement action against those who violate EPCRA requirements. Over the years, Region IX has distributed grant monies and has provided technical, programmatic and legal support to the SERCs and LEPCs in the region. Region IX has provided regulatory, CAMEO and other training to hundreds of public and private sector participants and continues to support a variety of EPCRA related projects initiated by our state and local counterparts.

The primary goals of this research are to: (1) Track the progress of SERCs, LEPCs and CUPAs by updating baseline data on a series of key performance indicators; and (2) probe current SERC, LEPC and CUPA practices and preferences regarding several important sets of issues—particularly including communications with local citizens, proactive accident prevention efforts, and the effectiveness of selected Region IX products and services. Region IX wants to improve our customer service and meet the changing needs of hazardous material prevention and emergency response planning, which are influenced by new electronic capabilities and a rapidly expanding knowledge base of environmental issues.

An effort will be made to survey all (about 190) SERCs, LEPCs and CUPAs. Introductory letters will be sent to an inclusive list of SERCs, LEPCs and CUPAs. This letter will describe the purpose of the survey and provide the respondent with the choice of either responding via a password protected web-site or mailed hard copy. SERCs, LEPCs and CUPAs will indicate their preference on the questionnaire included in the mailing and return the completed questionnaire to EPA. EPA will monitor the web-based survey and written submissions, and compile the data.

An agency may not conduct or sponsor, and a person is not required to respond to, a collection of information unless it displays a currently valid OMB control number. The OMB control numbers for EPA's regulations are listed in 40 CFR part 9 and 48 CFR Chapter 15.

The EPA would like to solicit comments to:

(i) Evaluate whether the proposed collection of information is necessary for the proper performance of the functions of the agency, including whether the information will have practical utility;

(ii) Evaluate the accuracy of the agency's estimate of the burden of the proposed collection of information, including the validity of the methodology and assumptions used;

(iii) Enhance the quality, utility, and clarity of the information to be collected; and

(iv) Minimize the burden of the collection of information on those who are to respond, including through the use of appropriate automated electronic, mechanical, or other technological collection techniques or other forms of information technology, e.g., permitting electronic submission of responses.

Burden Statement: It is estimated that there will be 190 respondents to the EPCRA Implementation Status Questionnaire for State Emergency Response Commissions (SERCs), Local Emergency Planning Committees (LEPCs) and California Certified Unified Program Agencies (CUPAs). Region IX estimates that each respondent will spend 1.5 hours either completing the on-line response form or the hard copy questionnaire. Region IX estimates a total response burden of 1.5 hours per participant.

Labor costs for responding are estimated at $26.36 per hour (combined average for white-collar workers in private industry and state/local government), based on the ''Employer Cost for Employment Compensation'' (Bureau of Labor and Statistics USDL 98–285 7/09/98). There is no need for ''developing, acquiring or utilizing technology systems for the purpose of collecting, validating or verifying information,'' ''disclosing and providing information,'' ''adjusting the existing ways to comply with any previous applicable instructions or requirements,'' ''training personnel to be able to respond to a collection of information,'' ''searching data sources,'' nor a need for respondents to keep records. Burden activities include only a few steps: Reading or listening to instructions, reading or listening to survey questions, and responding to survey questions. The average cost per respondent is $39.54.

No capital expenditures are needed by the respondent to complete the survey.

No operating and maintenance costs (on-going non-wage expenditures) are needed to complete the survey.

There are no capital or start-up costs.

To perform EPA's activities for the survey, Region IX estimates that 80 hours of a federal employee at the GS–13, Step 4 level will be needed, at an hourly wage of $29.41. This estimate is based on the 1999 GS annual pay schedule divided by 2,080 hours per year and multiplied by 1.6 (the standard government benefits multiplication factor). Region IX estimates that the federal employee will work 4.6% of the employee's time on this project during the life of the survey (1/1/99–10/31/99, 43.2 weeks) or approximately 80 hours (1,728 hours* .046), for an estimated cost to manage this project of $2,352.80.

EPA will be assisted in the survey by a contractor. The budget period is for 12 months. Funding covers: Survey design and planning; development of sampling plan; data collection and processing; quality control of data; analyzing and

reporting. EPA estimates that the contractor will require a total of 300 hours at a total cost of $20,000.00 in order to perform these activities.

Region IX estimates that 190 respondents will voluntarily respond to the survey at a total burden of 285 hours and a total cost of $7,512.60.

Burden means the total time, effort, or financial resources expended by persons to generate, maintain, retain, or disclose or provide information to or for a Federal agency. This includes the time needed to review instructions; develop, acquire, install, and utilize technology and systems for the purposes of collecting, validating, and verifying information, processing and maintaining information, and disclosing and providing information; adjust the existing ways to comply with any previously applicable instructions and requirements; train personnel to be able to respond to a collection of information; search data sources; complete and review the collection of information; and transmit or otherwise disclose the information.

Dated: April 27, 1999.

Nathan W. Lau,

Acting Deputy Director, Superfund Division, Region IX.

[FR Doc. 99–12162 Filed 5–13–99; 8:45 am]

BILLING CODE 6560–50–P

ENVIRONMENTAL PROTECTION AGENCY

[FRL–6342–8]

Agency Information Collection Activities: Continuing Collection; Comment Request; Notification of Regulated Waste Activity and RCRA Hazardous Waste Permit Application and Modification, Part A

AGENCY: Environmental Protection Agency (EPA).

ACTION: Notice.

SUMMARY: In compliance with the Paperwork Reduction Act (44 U.S.C. 3501 *et seq.*), this document announces that EPA is planning to submit the following continuing Information Collection Requests (ICR) to the Office of Management and Budget (OMB): Notification of Regulated Waste Activity, EPA ICR #261.12, OMB No. 2050–0028, expires on October 31, 1999 and RCRA Hazardous Waste Permit Application and Modification, Part A, EPA ICR #262.08, OMB No. 2050–0034, expires on October 31, 1999. Before submitting the ICRs to OMB for review and approval, EPA is soliciting comments on specific aspects of the proposed information collection as described below.

DATES: Comments must be submitted on or before July 13, 1999.

ADDRESSES: Commenters must send an original and two copies of their comments referencing docket number F–1999–RWIP–FFFFF to: RCRA Docket Information Center, Office of Solid Waste (5305G), U. S. Environmental Protection Agency Headquarters (EPA, HQ) 401 M Street, SW, Washington, D.C. 20460. Hand deliveries of comments should be made to the Arlington, VA address below. Comments may also be submitted electronically through the Internet to : rcra-docket@epamail.epa.gov. Comments in electronic format should also be identified by the docket number F–1999–RWIP–FFFFF. All electronic comments must be submitted as an ASCII file avoiding the use of special characters and any form of encryption.

Commenters should not submit any confidential business information (CBI) electronically. An original and two copies of CBI must be submitted under separate cover to: RCRA CBI Document Control Officer, Office of Solid Waste (5305W), U.S. EPA, 401 M Street, SW, Washington, D.C. 20460.

Public comments and supporting materials are available for viewing in the RCRA Information Center (RIC), located at Crystal Gateway I, First Floor, 1235 Jefferson Davis Highway, Arlington, VA. The RIC is open from 9 a.m. to 4 p.m., Monday through Friday, excluding federal holidays. To review docket materials, it is recommended that the public make an appointment by calling (703) 603–9230. The public may copy a maximum of 100 pages from any regulatory docket at no charge. Additional copies cost $0.15/page. This document and the supporting documents that detail the Notification of Regulated Waste Activity and RCRA Permit Application and Modification, Part A ICRs are also electronically available. See the **SUPPLEMENTARY INFORMATION** section for information on accessing them.

FOR FURTHER INFORMATION CONTACT: James Michael by mail at the Office of Solid Waste (5303W), U.S. Environmental Protection Agency, 401 M Street, SW, Washington, D.C. 20460, by phone at (703) 308–8610, or by Internet e-mail at: michael.james@epamail.epa.gov.

SUPPLEMENTARY INFORMATION:

Internet Availability

Today's document and the supporting documents that detail the Notification of Regulated Waste Activity and RCRA Hazardous Waste Permit Application and Modification, Part A ICRs are available on the Internet. Follow these instructions to access this information electronically:

WWWURL:http//www.epa.gov/epaoswer/hazwaste/notify/index.htm
FTP:ftp.epa.gov
Login: anonymous
Password: your Internet e-mail address
Path:/pub/epaoswer

Note: The official record for this action will be kept in paper form and maintained at the address in the **ADDRESSES** section above.

Affected Entities: Entities potentially affected by this action are generators, transporters and owners and operators of hazardous waste management facilities.

Title: Notification of Regulated Waste Activity, EPA CR I#261.12, OMB No. 2050–0028, expires on October 31, 1999 and RCRA Hazardous Waste Permit Application and Modification, Part A, EPA ICR #262.08, OMB No. 2050–0034, expires on October 31, 1999.

Abstract: Section 3010 of Subtitle C of RCRA, as amended, requires any person who generates or transports regulated waste or who owns or operates a facility for the treatment, storage, or disposal (TSD) of regulated waste to notify EPA of their activities, including the location and general description of activities and the regulated wastes handled. Section 3005 of Subtitle C of RCRA requires TSDs to obtain a permit. To obtain the permit, the TSD must submit an application describing the facility's operation. There are two parts to the RCRA permit application—Part A and Part B. Part A defines the processes to be used for treatment, storage, and disposal of hazardous wastes: the design capacity of such processes: and the specific hazardous wastes to be handled at the facility.

An agency may not conduct or sponsor, and a person is not required to respond to, a collection of information unless it displays a currently valid OMB control number. The OMB control numbers for EPA's regulations are listed in 40 CFR part 9 and 48 CFR Chapter 15. The Agency today begins an effort to examine the notification and Part A permit application forms and consider options for reducing their burden and increasing the usefulness of the information these forms collect. The Agency would appreciate any information on the users of this information, how they use this information, how the information could be improved, and how the burden for these forms can be reduced.

Therefore, the EPA would like to solicit comments to:

(i) Evaluate whether the proposed collection of information is necessary for the proper performance of the functions of the agency, including whether the information will have practical utility;

(ii) Evaluate the accuracy of the agency's estimate of the burden of the proposed collection of information, including the validity of the methodology and assumptions used;

(iii) Enhance the quality, utility, and clarity of the information to be collected; and

(iv) Minimize the burden of the collection of information on those who are to respond, including through the use of appropriate automated electronic, mechanical, or other technological collection techniques or other forms of information technology, e.g., permitting electronic submission of responses.

Burden Statement: The estimated average burden for renewing the existing notification ICR is 4.25 hours per respondent for initial notifications and 2.10 hours per respondent for subsequent notifications. This estimates for the notification ICR includes all aspects of the information collection including time for reviewing instructions, searching existing data sources, gathering data, and completing and reviewing the form.

The estimated average burden for renewing the existing Part A ICR is approximately 27 hours per respondent for submitting a new Part A permit application and approximately 14 hours for submitting a revised Part A permit application. The burden estimates for the Part A ICR includes time for reading the regulations, preparing and submitting initial and revised Part A permit applications, preparing and submitting justifications for changes and preparing and submitting subpart H compliance demonstrations.

EPA estimates that the number of respondents per year for notifications is 31,125 (16,174 initial notifications and 14,951 subsequent notifications). For Part A permit applications, EPA estimates that the number of respondents per year is 10 for new Part A permit applications and 49 for Part A revisions. For these ICRs, collection occurs one-time per respondent, unless regulations are revised and promulgated. Timing of the submission of the notification and the Part A permit application forms are variable depending on the status of the respondent and the timing of the promulgation of the regulations. The estimated total annual burden on respondents for initial and subsequent notifications is 100,137 hours and the estimated total annual burden on respondents for new and revised Part A permit applications is 945 hours. These estimates of total annual burden reflect a decrease in burden of 30% for notifications and 31% for Part A permit applications when compared with the previously approved ICR (1996).

The Part A permit application form also reflects a change in reporting of *Standard Industrial Classification (SIC) codes*, applicable only to the United States, to North America Industry Classification System (NAICS) codes, applicable throughout North America. The NAICS codes have been established as the new Federal standard, superceding the SIC codes. They are being adopted by the U.S. EPA for the purpose of the (1) collection, and (2) promotion of uniformity and comparability in the presentation of statistical and economic information describing the economy. The Agency anticipates no increase or decrease in burden related to the change.

Burden means the total time, effort, or financial resources expended by persons to generate, maintain, retain, or disclose or provide information to or for a Federal agency. This includes the time needed to review instructions; develop, acquire, install, and utilize technology and systems for the purposes of collecting, validating, and verifying information, processing and maintaining information, and disclosing and providing information; adjust the existing ways to comply with any previously applicable instructions and requirements; train personnel to be able to respond to a collection of information; search data sources; complete and review the collection of information; and transmit or otherwise disclose the information.

Dated: May 7, 1999.

Elizabeth A. Cotsworth,

Acting Director, Office of Solid Waste.

[FR Doc. 99–12245 Filed 5–13–99; 8:45 am]

BILLING CODE 6560–50–P

ENVIRONMENTAL PROTECTION AGENCY

[FRL–6342–7]

Agency Information Collection Activities: Proposed Collection; Comment Request; Synopses of Proposed Contract Actions and Market Research Questions

AGENCY: Environmental Protection Agency (EPA).

ACTION: Notice.

SUMMARY: In compliance with the Paperwork Reduction Act (44 U.S.C. 3501 *et seq.*), this document announces that EPA is planning to submit the following proposed Information Collection Request (ICR) to the Office of Management and Budget (OMB): Synopses of Proposed Contract Actions and Market Research Questions, EPA ICR Number 1910.01. Before submitting the ICR to OMB for review and approval, EPA is soliciting comments on specific aspects of the proposed information collection as described below.

DATES: Comments must be submitted on or before July 13, 1999.

ADDRESSES: 401 M Street, SW, Attn: 3802R, Washington, DC 20460.

FOR FURTHER INFORMATION OR A COPY CONTACT: Leigh Pomponio, (202) 564–4364, e-mail: pomponio.leigh@epamail.epa.gov.

SUPPLEMENTARY INFORMATION: *Affected entities:* Entities potentially affected by this action are firms which seek to provide supplies and services to EPA. Title: Synopses of Proposed Contract Actions and Market Research Questions; EPA ICR Number 1910.01.

Abstract: EPA frequently publicizes anticipated contract actions in accordance with the Federal Acquisition Regulation (FAR) Part 5, and also conducts market research in accordance with FAR Part 10. In both instances, the public is invited to voluntarily respond to specific questions regarding anticipated procurements or to provide general comments to EPA. Comments received are used by the Agency for acquisition planning purposes. An agency may not conduct or sponsor, and a person is not required to respond to, a collection of information unless it displays a currently valid OMB control number. The OMB control numbers for EPA's regulations are listed in 40 CFR part 9 and 48 CFR Chapter 15.

The EPA would like to solicit comments to:

(i) Evaluate whether the proposed collection of information is necessary for the proper performance of the functions of the agency, including whether the information will have practical utility;

(ii) evaluate the accuracy of the agency's estimate of the burden of the proposed collection of information, including the validity of the methodology and assumptions used;

(iii) Enhance the quality, utility, and clarity of the information to be collected; and

(iv) Minimize the burden of the collection of information on those who are to respond, including through the use of the appropriate automated electronic, mechanical, or other

technological collection techniques or other forms of information technology, e.g., permitting electronic submission of responses.

Burden Statement: The annual public reporting and recordkeeping burden for this collection of information is estimated to average 3.03 hours per response. It is estimated that any individual may respond to synopses or market research questions 5 times per year. EPA anticipates publicizing approximately 260 contract actions per year, and conducting 3790 market research inquiries. Burden means the total time, effort, or financial resources expended by persons to generate, maintain, retain, or disclose or provide information to or for a Federal agency. This includes the time needed to review instructions; develop, acquire, install, and utilize technology and systems for the purposes of collecting, validating, and verifying information, processing and maintaining information, and disclosing and providing information; adjust the existing ways to comply with any previously applicable instructions and requirements; train personnel to be able to respond to a collection of information; search data sources; complete and review the collection of information; and transmit or otherwise disclose the information.

Dated: May 7, 1999.

Lawrence G. Wyborski,

Acting Manager, Policy Service Center.

[FR Doc. 99–12249 Filed 5–13–99; 8:45 am]

BILLING CODE 6560–50–U

ENVIRONMENTAL PROTECTION AGENCY

[ER–FRL–6242–6]

Environmental Impact Statements and Regulations; Availability of EPA Comments

Availability of EPA comments prepared April 19, 1999 Through April 23, 1999 pursuant to the Environmental Review Process (ERP), under Section 309 of the Clean Air Act and Section 102(2)(c) of the National Environmental Policy Act as amended. Requests for copies of EPA comments can be directed to the Office of FEDERAL ACTIVITIES AT (202) 564–7167.

An explanation of the ratings assigned to draft environmental impact statements (EISs) was published in FR dated April 09, 1999 (64 FR 17362).

Draft EISs

ERP No. D–AFS–L65207–OR Rating *LO, Young'n Timber Sales, Implementation, Willamette National Forest Land and Resource Management Plan, Middle Fork Ranger District, Lane County, OR.

Summary: EPA used a screening tool to conduct a limited review of this action. Based upon the screen, EPA does not foresee having any environmental objections to the proposed project. Therefore, EPA will not be conducting a detailed review.

ERP No. D–AFS–L65304–OR Rating EC2, Moose Subwatershed Timber Harvest and Other Vegetation Management Actions, Central Cascade Adaptive Management (CCAMA), Willamette National Forest, Sweet Home Ranger District, Linn County, OR.

Summary: EPA expressed environmental concerns with the proposed timber harvest due to entry into roadless area and the potential for impact to water quality and recommended that the Forest Service continue to monitor for water quality impacts.

ERP No. D–COE–J36050–ND Rating EO2, Maple River Dam and Reservoir, Construction and Operation, Flood Control, Cass County Joint Water Resource District, Cass County, ND.

Summary: EPA expressed environmental objections to the project on the basis of: (1) the lack of adequate provisions to identify and protect aquatic habitats, (2) exceedances of water quality standards, (3) the uncertainty of the mitigation, restoration and conservation efforts, (4) the lack of information on future flood control activities, (5) future growth and development impacts in the lower watershed area, (6) a cumulative impacts analysis that was limited to water chemistry, (7) a substantial need to address the watershed as a unit.

Final EISs

ERP No. F–AFS–L65255–AK, Control Lake Timber Sale, Implementation, Prince of Wales Island, Tongass National Forest, AK.

Summary: Review of the Final EIS was not deemed necessary. No formal comment letter was sent to the preparing agency.

ERP No. F–BLM–L65294–OR, Beaty Butte Allotment Management Plan, Implementation, Lakeview District, Hart Mountain National Antelope Refuge, Lake and Harney Counties, OR.

Summary: The Final EIS has addressed the issues EPA raised in the draft EIS.

ERP No. FS–COE–G32054–00, Red River Waterway, Louisiana, Texas, Arkansas and Oklahoma and Related Projects, New and Updated Information, Red River Below Denison Dam Levee Rehabilition, Implementation, Hempstead, Lafayette and Miller Counties, AR.

Summary: EPA has no objection to the selection of the preferred alternative described in the FSEIS.

Dated: May 11, 1999.

William D. Dickerson,

Director, Office of Federal Activities.

[FR Doc. 99–12265 Filed 5–13–99; 8:45 am]

BILLING CODE 6560–50–U

ENVIRONMENTAL PROTECTION AGENCY

[ER–FRL–6242–5]

Environmental Impact Statements; Notice of Availability

Responsible Agency: Office of Federal Activities, General Information (202) 564–7167 or (202) 564–7153.

Weekly receipt of Environmental Impact Statements

Filed May 03, 1999 Through May 07, 1999.

Pursuant to 40 CFR 1506.9.

EIS No. 990148, Final Supplement, AFS, CO, Lakewood Raw Water Pipeline for Continued Operation, Maintenance, Reconstruction and/or Replacement, Application for Easement, Roosevelt National Forest, Boulder Ranger District, in the City of Boulder, CO, Due: June 07, 1999, Contact: Jean Thomas (970) 498–1267. The above DOA EIS should have appeared in the 05/07/99 **Federal Register**. The 30–day Comment Period is Calculated from 05/07/99.

EIS No. 990149, Draft EIS, AFS, MT, Bridger Bowl Ski Area, Permit Renewal and Master Development Plan Update, Implementation, Special Use Permit and COE Section 404 Permit, Gallatin National Forest, in the City of Bozeman, MT, Due: June 28, 1999, Contact: Nancy Halstom (406) 587–6920.

EIS No. 990150, Final EIS, NPS, TX, Lyndon B. Johnson National Historical Park, Package 227, General Management Plan, Implementation, Blanco and Gillespie Counties, TX, Due: June 14, 1999, Contact: Leslie Starhart (830) 868–7128.

EIS No. 990151, Final EIS, FHW, MO, IA, US 61, US 218 and IA–394 Highway Improvements, Construction, Funding, US Army COE Section 404 Permit, Lewis and Clark Counties, MO and Lee and Henry Counties, IA , Due: June 14, 1999, Contact: Donald Neumann (573) 636–7104.

EIS No. 990152, Draft EIS, FTA, VA, Norfolk-Virginia Beach Light Rail Transit System East/West Corridor

Project, Transportation Improvements, Tidewater Transportation District Commission, COE Section 404 Permit, City of Norfolk and City of Virginia Beach, VA, Due: June 28, 1999, Contact: Michael McCollum (215) 656–7100.

EIS No. 990153, Legislative Final EIS, USA, AK, Alaska Army Lands Withdrawal Renewal for Fort Wainwright and Fort Greely West Training Area, Approval of Permits and Licenses, City of Fairbanks, City of North Pole and City of Delta Junction, North Star Borough, AK , Due: June 14, 1999, Contact: Cindy Herdrich (970) 491–5347.

EIS No. 990154, Draft Supplement, DOE, CA, NM, TX, ID, SC, WA, Surplus Plutonium Disposition (DOE/EIS–0283–S) for Siting, New and Revised Information, Construction and Operation of three facilities for Plutonium Disposition, Possible Sites Hanford, Idaho National Engineering and Environmental Laboratory, Pantex Plant and Savannah River, CA, ID, NM, SC, TX and WA, Due: June 28, 1999, Contact: G. Bert Stevenson (202) 586–5368.

EIS No. 990155, Draft EIS, BLM, WY, Wyodak Coal Bed Methane Project, Road Construction, Drilling Operation, Electrical Distribution Line, Powder River Basin, Campbell and Converse Counties, WY, Due: June 28, 1999, Contact: Richard Zander (307) 684–1161.

EIS No. 990156, Final EIS, UAF, ND, Minuteman III Missile System Dismantlement, Intercontinental Ballistic Missile (ICBM) Launch Facilities (LFs) and Missile Alert Facilities (MAFs), Deployment Areas, Grand Forks Air Forces Base, ND , Due: June 14, 1999, Contact: Jonathan D. Farthing (210) 536–3069.

Amended Notices

EIS No. 990103, Draft Supplement, FHW, CA, CA–125 South Route Location, Adoption and Construction, between CA–905 on Otay Mesa to CA–54 in Spring Valley, Updated and Additional Information, Funding and COE Section 404 Permit, San Diego County, CA, Due: May 24, 1999, Contact: C. Glenn Clinton (916) 498–5037. Published FR–04–09–99—Due Date Correction.

EIS No. 990108, Draft Supplement EIS, AFS, ID, Grade-Dukes Timber Sale, Proposal to Harvest and Regenerate Timber, Implementation, Cuddy Mountain Roadless Area, Payette National Forest, Weiser Ranger District, Washington County, Idaho, Due: June 01, 1999, Contact: Dautis Pearson (208) 253–0134. Published FR 04–09–99 Review Period Extended.

EIS No. 990143, Draft EIS, TPT, CA, Presidio of San Francisco General Management Plan, Implementation, New Development and Uses within the Letterman Complex, Golden Gate National Recreation Area, City and County of San Francisco, CA, Due: June 14, 1999, Contact: John Pelka (415) 561–5300. Published FR–04–30–99—Correction to Document Status from a Draft Supplement to Draft.

Dated: May 11, 1999.

William D. Dickerson,

Director, Office of Federal Activities.

[FR Doc. 99–12264 Filed 5–13–99; 8:45 am]

BILLING CODE 6560–50–U

ENVIRONMENTAL PROTECTION AGENCY

[FRL–6342–1]

RIN 2060–AH52

Public Meetings To Discuss Air Quality Modeling and Infrastructure Issues Associated With Alternative-Fueled Vehicles

AGENCY: Environmental Protection Agency (EPA).

ACTION: Notice of public meetings.

SUMMARY: The Environmental Protection Agency intends to hold two public workshops to discuss issues associated with alternative fuel vehicles (AFVs) (i.e., vehicles powered by fuels other than gasoline). The first workshop (which EPA will hold May 26, 1999, in Louisville, Kentucky), will focus on issues associated with air quality modeling of AFVs. The purpose of this workshop is to facilitate an exchange of information that will help EPA determine which areas of its modeling, if any, should be enhanced to better estimate the air quality impacts of alternative-fueled vehicles. The second workshop will focus on issues related to infrastructure development and creating a sustainable market for AFVs.

DATES: The first workshop (on modeling and AFVs) will be held on May 26, 1999, in Louisville, Kentucky, following the Department of Energy's National Clean Cities Conference. The date for the second workshop (on infrastructure development and creating a sustainable market for AFVs) will be announced later. Members of the public are invited to attend as observers.

ADDRESSES: Questions about the workshop should be addressed to: Barry Garelick (202–564–9028; garelick.barry@epa.gov) or Christine Hawk (202–564–9672; hawk.christine@epa.gov), 401 M Street, S.W. (6406J), Washington, D.C. (20460). The workshop will be held at the Sellbach Hilton Hotel, 500 4th St, Louisville, Kentucky 40202, 800 333–3399 or 502–585–3200.

FOR FURTHER INFORMATION CONTACT: Barry Garelick (202) 564–9028.

SUPPLEMENTARY INFORMATION: As this Administration has long recognized, one of the keys to moving forward environmentally is moving forward technologically. Progress towards sustainable reductions in emissions from the mobile source sector is inextricably linked to technological advancement. Motor vehicles are significant contributors to ground-level ozone, the principal harmful ingredient in smog. They also emit other pollutants, including particulate matter and air toxics. Motor vehicle emissions contribute to public health problems such as asthma and other respiratory problems, especially in children.

History has shown that the rise in vehicle sales and vehicle miles traveled every year has consistently led to increases in the aggregate emissions from the mobile source sector, despite progress in reducing emissions from gasoline-powered, conventional motor vehicles. This places increasing importance on technological developments, including vehicles powered by fuels other than gasoline. There is particular interest in the creation of vehicles whose emissions do not increase as the vehicle ages. There are a number of types of alternative fuel vehicles (AFVs) in production and under development. In the United States, manufacturers are already selling various types of AFVs, including vehicles powered by electricity, compressed natural gas, methanol, and ethanol. The last year has also seen dramatic developments in hybrid-electric vehicle and fuel cell technology.

Congress and the Administration have already recognized that they have an important role to play regarding AFVs. As part of the 1990 Amendments to the Clean Air Act, Congress included sections promoting increased numbers of clean fuel fleet vehicles. The Clean Fuel Fleet program, which began on September 1, 1998, requires certain nonattainment areas to adopt and implement a program requiring certain centrally-fueled fleets to include a specified percentage of clean-fuel vehicles in their new fleet vehicle purchases. Additionally, Congress passed the Energy Policy Act of 1992 (EPAct), which includes numerous provisions designed to increase the

number of alternative fueled vehicles in vehicle fleets. These provisions include minimum Federal fleet requirements, public information programs, and guidelines for state and local incentive programs. The Administration is working on implementing the requirements of EPAct. In 1996, President Clinton signed Executive Order 13031, ''Federal Alternative Fueled Vehicle Leadership.'' This Executive Order sets forth reporting requirements to ensure that federal agencies comply with the AFV acquisition requirements of EPAct. By FY1999, 75 percent of certain federal vehicle purchases must be AFVs. The Order also includes a credit system that allows agencies to gain extra credits towards meeting their light-duty vehicle procurement goals by acquiring medium-duty and heavy-duty AFVs and zero emission vehicles.

States also are playing a role in supporting AFVs. California created Low and Zero Emission Vehicle programs that New York, Vermont, Maine, and Massachusetts have adopted.

It is important for the Agency to keep pace with and encourage the development of alternative fuel technologies. To continue progress in meeting this objective with respect to AFVs, the Agency is announcing a number of steps today. EPA intends to hold two workshops on issues related to AFVs. One workshop, to be held on May 26, 1999, will address issues related to modeling and AFVs, while a second workshop to be held in the next year will address infrastructure issues related to creating a sustainable market for AFVs.

Alternative Fuel Team

EPA's Office of Mobile Sources has established an Alternative Fuel Team (AF Team), which has members from various OMS divisions. The goal of the AF Team is to promote the use of alternative fuels to help meet air quality goals. The team will help coordinate the Agency's existing efforts related to AFVs, and develop and conduct new efforts. The primary contact for outside parties interested in EPA's AFV efforts will be Deborah Adler (734–214–4223) or Christine Hawk (202–564–9672) (although others within the Agency may be the principal contact for specific issues).

The AF Team is in the process of developing an action plan for the next year. This plan will cover a range of activities, such as: enhancing and/or developing modeling that accurately characterizes emissions of AFVs as compared to gasoline vehicles; tracking and, where appropriate, participating in various Administration efforts related to AFVs, including the Clean Cities program and federal purchases of AFVs; working with states on Clean Fuel Fleet programs; and facilitating discussions on infrastructure development to create a sustainable market for AFVs. In addition, within the next six months, the AF Team will also begin to plan and execute an ongoing public education campaign for which they will develop outreach and public education materials on AFVs and the role they can play in cleaning up the nation's air. The Team's efforts in this area will be comparable to the public education efforts the Office of Mobile Sources has made on other mobile source/clean air issues. Anyone who wishes to provide input on appropriate activities for the Team should contact Deborah Adler or Christine Hawk.

Workshop on AFVs and Modeling

It is important for state and federal policy makers to have accurate information on the full environmental consequences of different types of technology so that they can make informed regulatory and purchasing decisions. On May 26, 1999, EPA plans to conduct a public workshop in Louisville, Kentucky, to address various issues related to modeling the environmental effects of AFVs as compared to gasoline vehicles. (The date and location of the workshop were selected to coordinate with the Department of Energy's National Clean Cities conference, which begins May 24 in Louisville.) The goal of the workshop will be to look at how at least two models for motor vehicle emissions evaluate AFV emissions, to identify how these models might be improved to be more accurate, and to identify whether there are data gaps that limit a model's ability to compare gasoline vehicle and AFV emissions accurately. The Agency will use this workshop to help the AFV Team and others in the Agency focus future modeling and data collection efforts.

At least two models will be discussed at the workshop. First, EPA has developed, and is currently updating, its comprehensive mobile source emissions model (the MOBILE model). This model provides average in-use fleet emission factors for pollutants for different vehicle categories operated under various conditions as specified by the model user. Features incorporated in the MOBILE model allow the user to simulate some characteristics of AFVs on the mobile source fleet, and EPA is in the process of improving this capability. Second, EPA is working with the Department of Energy on another model which calculates the life cycle emissions of various fuels. In the workshop, EPA would be interested in exploring ideas participants might have to enhance its short-term modeling capabilities as well as suggestions for other, longer-term projects.

Most of the data developed in support of the MOBILE model is based on the emissions performance of gasoline-powered vehicles. EPA has developed some limited data on the emissions performance of natural gas vehicles, especially in the area of vehicle deterioration, and is currently working with some interested parties to incorporate some of this data into features in the next MOBILE model. One particular feature would allow the model user to estimate the emissions difference between a fleet of various numbers of natural gas and gasoline-powered vehicles. However, one of the significant issues hampering AFV modifications to the MOBILE model is the availability of emissions data and performance characteristics of these vehicles. The modeling code is based on the analysis of emissions data and the lack of emissions data regarding AFVs hampers EPA's ability to model their performance accurately. Some of the areas EPA has already identified where more data would be useful are emissions factors for heavy-duty natural gas vehicles, off-cycle emissions performance of vehicles, and the level of toxic compounds in emissions from current and advanced technology vehicles. In this workshop, EPA is interested in discussing ways to generate emissions data in these areas as well as other areas identified as significant areas for further study and how this data could be incorporated into the MOBILE model.

The other modeling-related topic for discussion at this workshop will be the possible creation of other modeling tools that could help quantify the various emissions differences between vehicles operated on different fuels. The Department of Energy has developed a methodology for doing such an analysis. An air quality model that quantified the full life-cycle emissions from various fuels could be useful for states making regulatory decisions or determining which type of AFVs to purchase to obtain the greatest air quality benefit possible. EPA recognizes that a modeling tool of this type would require more than just actual emissions data for it to be useful. It would also require information such as the actual emissions inputs for a life-cycle analysis for an electric vehicle and whether an AFV is used in the same manner as a

conventional vehicle. However, the Agency is interested in discussing this issue to see if such analysis would be worthwhile and beneficial and if the developmental work done to date could be useful for states making in future modeling analysis.

Anyone with suggestions for this workshop should contact Barry Garelick at the address listed above.

Workshop on AFV Market and Infrastructure Development

Within the next year, the Agency intends to conduct a public workshop on infrastructure issues related to creating a sustainable market for AFVs. In previous discussions on AFVs, EPA has noted that the development of a sustainable market for AFVs, which includes necessary infrastructure development, is a key component of any plan to achieve the air quality gains that are possible from the use of AFVs. Developing the infrastructure necessary for AFVs is an important part in developing a sustainable market. For example, drivers may be reluctant to purchase electric vehicles if they have concerns about the availability of recharging stations. EPA believes that solutions to infrastructure development needs can be found by a variety of stakeholders working together. For example, electric utilities that support electric vehicles might provide special assistance for the installation of residential or commercial charging stations; states that wish to encourage the purchase of AFVs might provide tax incentives; fleet operators in any given area, including states and the federal government, could agree to focus AFV purchases on a particular type of AFV. From past discussions with a variety of stakeholders, it appeared that discussions on infrastructure development and creation of a sustainable market for AFVs could identify useful steps for various stakeholders to take and that some steps might best be taken by several stakeholders working in partnership with each other.

At this workshop, the Agency's intent is to gather other Administration officials, State officials (both environmental and purchasing agent), auto and utility industry representatives, environmentalists, and other interested parties. The workshop will provide an opportunity for oral and written presentations on what AFVs are available and how many are being purchased by whom (including federal and state fleet purchases). It will provide a forum for looking at what barriers exist that limit the sales of AFVs and how those barriers can be reduced or eliminated. It will also provide a forum for identifying key opportunities to create a sustainable market for AFVs. The workshop will focus on the Ozone Transport Region (northern Virginia through Maine) because of the interest the OTR States have shown in AFVs over the past few years. The Agency intends that the workshop will draw on the experience of other areas (such as California). EPA also welcomes participation by states outside the OTR.

This workshop is intended to be the type of workshop that the northeastern states and the auto industry had tentatively agreed to in the ATV Agreement in the National LEV MOU that was never finalized.[1] As EPA indicated in several **Federal Register** notices, EPA believed that the ATV Agreement would have been a productive way of creating a sustainable market for ATVs through cooperative working relationships.

The date and location of the workshop and a more detailed agenda will be published in the **Federal Register** at a later date. Anyone with suggestions for this workshop should contact Barry Garelick.

Dated: May 5, 1999.

Carol M. Browner,

Administrator.

[FR Doc. 99–12246 Filed 5–13–99; 8:45 am]

BILLING CODE 6560–50–P

[1] In the negotiations between the northeastern states and the auto industry on EPA's National Low Emission Vehicle (NLEV) program, the states and the auto industry had tentatively agreed to a process to facilitate discussion on the creation of a sustainable market for advanced technology vehicles (ATV Agreement). (This tentative ATV Agreement was to be included in a Memorandum of Understanding (MOU) that was to form the basis for the NLEV program, but the ATV Agreement was not intended to be included in the NLEV regulations. However, the parties have ended discussions and decided not to finalize the MOU, which would have contained the ATV Agreement).

FEDERAL COMMUNICATIONS COMMISSION

Publication Information Collections Approved by Office of Management and Budget

May 10, 1999.

The Federal Communications Commission (FCC) has received Office of Management and Budget (OMB) approval for the following public information collections pursuant to the Paperwork Reduction Act of 1995, Pub.L. 104–13. An agency may not conduct or sponsor and a person is not required to respond to a collection of information unless it displays a currently valid control number. For further information contact Shoko B. Hair, Federal Communications Commission, (202) 418–1379.

Federal Communications Commission

OMB Control No.: 3060–0787.

Expiration Date: 04/30/2002.

Title: Implementation of the Subscriber Carrier Selection Changes Provisions of the Telecommunications Act of 1996.

Form No.: N/A.

Respondents: Business or other for-profit.

Estimated Annual Burden: 1800 respondents; 20.46 hours per response (avg.); 36,844 total annual burden hours for all collections.

Estimated Annual Reporting and Recordkeeping Cost Burden: $0.

Frequency of Response: On occasion; recordkeeping requirements; third party disclosures.

Description: Section 258 of the Communications Act of 1934 (Act), as amended by the Telecommunications Act of 1996, makes it unlawful for any telecommunications carrier to ''submit or execute a change in a subscriber's selection of a provider of telecommunications exchange service or telephone toll service except in accordance with such verification procedures as the Commission shall prescribe.'' The section further provides that any telecommunications carrier that violates such verification procedures and that collects charges for telephone exchange service or telephone toll service from a subscriber, shall be liable to the carrier previously selected by the subscriber in an amount equal to all charges paid by the subscriber after such violation. In order to implement section 258, the Commission amended its rules to modify sections 64.1100 and 64.1150 of its rules and add new sections 64.1160, 64.1170, 64.1180, and 64.1190 to its rules. The modifications and additions are necessary to accommodate the Commission's expanded scope of authority to require verification of orders generated by telemarketing for all telecommunications service, and to provide that unauthorized carriers forfeit all charges collected as a result of their unlawful actions.

a. *Section 64.1100: Separate authorization and verification for multiple services.* Pursuant to rule section 64.1100(b), a carrier marketing multiple services (e.g., intraLATA and interLATA) must specifically distinguish among such services in any preferred carrier solicitation and must obtain separate authorization for each service that is being changed. *Retention of verification records.* Pursuant to rule

section 64.1100(a)(1), a carrier must retain verification records for two years after their creation. *Subscriber Liability for Charges.* Pursuant to section 64.1100(d), any carrier that the subscriber calls to report the unauthorized change is required to inform the subscriber that he or she is not required to pay for any slamming charges incurred for the first 30 days after the unauthorized charges. *Re-rating of slamming charges.* Pursuant to rule section 64.1100(d)(3), where a slamming carrier imposes charges on a subscriber outside of the 30-day absolution period, the subscriber must pay those charges to the authorized carrier at the authorized carrier's rates, after the authorized carrier has re-rated the subscriber's bill. (No. of respondents: 1800; hours per response: 1.5 hours; total annual burden: 2,700 hours).

b. *Section 64.1150.* Pursuant to Section 64.1150 no telecommunications carrier shall submit a preferred carrier charge order unless and until the order has first been confirmed in accordance with the procedures of 64.1150 (a)–(d). Telecommunications carriers may obtain the subscriber's written authorization as required by 64.1150 or an electronic authorization, or an oral authorization through a qualified independent third party. The Commission also permits state-enacted verification procedures applicable to intrastate preferred carrier charge orders. (No. of respondents: 675; hours per response: 1.25 hours; total annual burden 844 hours).

c. Section 64.1160. *Letter of Agency.* Section 64.1160 contains the requirements for issuing a letter of agency to obtain written authorization and/or verification of a subscriber's request to change his/her preferred carrier selection. The letter of agency must be a separate document, shall not be combined on the same document with inducements of any kind. It must be legible, and contain clear and unambiguous language. If any portion of the letter of agency is transmitted into another language then all portions of the letter of agency must be translated. *Separate authorization and verification for multiple services.* Pursuant to section 64.1160(e)(4), a carrier marketing multiple services (e.g., intraLATA and interLATA) must specifically distinguish among such services in any letter of agency, and must obtain separate authorization for each service that is being changed. (No. of respondents: 1800; hours per response: 1.5 hours; total annual burden: 2700 hours). Section 64.1170. *Request for proof of verification from authorized carrier to unauthorized carrier.* Pursuant to section 64.1170(a), upon receiving notification from the subscriber or an executing carrier that a subscriber's carrier selection was changed without authorization, the properly authorized carrier must, within 30 days, request from the allegedly unauthorized carrier proof of verification of the subscriber's authorization to change carriers. *Unauthorized carrier's response to authorized carrier's request for proof of verification.* Pursuant to section 64.1170(a), within ten days of receiving the authorized carriers request for proof of verification, the allegedly unauthorized carrier shall forward to the authorized carrier either (1) proof of verification of the subscriber's authorization to change carriers; or (2) copies of any telephone bill(s) issued from the unauthorized carrier to the subscriber, if applicable; and certain charges. *Subscriber Refunds or Credits.* Pursuant to section 64.1170(d)(1), the authorized carrier must notify the subscriber within 60 days after the subscriber has notified the authorized carrier of an unauthorized change, if the authorized carrier has failed to collect from the unauthorized carrier the charges paid by the slammed subscriber. (No. of respondents: 1800; hours per response: 5 hours; total annual burden: 9000 hours).

e. Section 64.1180. *Investigation Procedures.* Pursuant to 64.1180, the carrier shall have the opportunity to submit to the subscriber's authorized carrier a claim for the amount of charges for which the subscriber was absolved, along with proof of the subscriber's verification of the disputed carrier change. The authorized carrier shall make a decision as to whether the subscriber was actually slammed by the carrier making the claim. Within 60 days after receipt of the claim and the proof of verification, the originally authorized carrier shall issue a decision to the subscribers and the carrier making the claim. (No. of respondents: 1800; hours per respondents: 4 hours; total annual burden: 7200 hours).

f. Section 64.1190. *Freeze verification:* Pursuant to section 64.1190, all local exchange carriers that impose preferred carrier freezes on their subscribers' accounts must verify such freezes, as well as accept subscriber requests to lift such freezes in writing or by three-way calls. (No. of respondents: 1800; hours per response: 2 hours; total annual burden: 3600 hours).

g. *Proposed Registration Requirement:* The FNPRM proposed to add a new section 64.1195 that requires carriers to file a registration with the Commission in order to provide interstate telecommunications service. The Commission proposed that the registration should contain, at a minimum, the carrier's business name(s); the names and addresses of all officers and principals; verification that such officers and principals have no prior history of committing fraud; and verification of the financial viability of the carrier. (No. of respondents: 1800; hours per response: 2 hours; total annual burden: 3600 hours).

h. *Proposed Reporting Requirement.* The FNPRM sought comments on whether the Commission should require carriers to submit to the Commission a report containing the number of slamming complaints submitted to that carrier. (No. of respondents: 1800; hours per response: 2 hours; total annual burden: 3600 hours).

i. *Proposed Carrier Liability:* The FNPRM proposed to require (1) where a consumer has paid charges to a slamming carrier, the authorized carrier shall be permitted to collect from the slamming carrier double the amount of charges paid by the subscriber during the first 30 days after the unauthorized change; and (2) where a consumer has not paid charges to the slamming carrier, the authorized carrier shall be permitted to collect from the slamming carrier the amount that would have been billed to the subscriber during the first 30 days after the unauthorized change. (No. of respondents: 1800; hours per response: 2 hours; total annual burden: 3600 hours). Obligation to respond: Mandatory.

Public reporting burden for the collections of information is as noted above. Send comments regarding the burden estimate or any other aspect of the collections of information, including suggestions for reducing the burden to Performance Evaluation and Records Management, Washington, D.C. 20554.

Federal Communications Commission.

Shirley S. Suggs,

Chief, Publications Branch.

[FR Doc. 99–12299 Filed 5–13–99; 8:45 am]

BILLING CODE 6712–01–P

FEDERAL MEDIATION AND CONCILIATION SERVICE

Labor-Management Cooperation Program; Application Solicitation

AGENCY: Federal Mediation and Conciliation Service.

ACTION: Final fiscal year 1999 program guidelines/application for labor-management committees.

SUMMARY: The Federal Mediation and Conciliation Service (FMCS) is publishing the final Fiscal Year 1999 Program Guidelines/Application Solicitation for the Labor-Management Cooperation program to inform the public. The program is supported by Federal funds authorized by the Labor-Management Cooperation Act of 1978, subject to annual appropriations. This Solicitation contains changes regarding the dollar range, date for filing, and use of funds awarded on a non-competitive basis. The change will provide FMCS with the necessary flexibility to target particular labor-management committee initiatives capable of widespread replication.

FOR FURTHER INFORMATION CONTACT: Peter L. Regner, 202–606–8181.

Labor-Management Cooperation Program Application Solicitation for Labor-Management Committees FY 1999

A. Introduction

The following is the final solicitation for the Fiscal Year (FY) 1999 cycle of the Labor-Management Cooperation Program as it pertains to the support of labor-management committees. These guidelines represent the continuing efforts of the Federal Mediation and Conciliation Service to implement the provisions of the Labor-Management Cooperation Act of 1978 which was initially implemented in FY 81. The Act generally FMCS to provide assistance in the establishment and operation of company/plant, area, public sector, and industry-wide labor-management committee which:

(A) Have been organized jointly by employers and labor organizations representing employees in that company/plant, area, government agency, or industry; and

(B) Are established for the purpose of improving labor-management relationships, job security, and organizational effectiveness; enhancing economic development; or involving workers in decisions affecting their jobs, including improving communication with respect to subjects of mutual interest and concern.

The Program Description and other sections that follow, as well as a separately published FMCS Financial and Administrative Grants Manual, make up the basic guidelines, criteria, and program elements a potential applicant for assistance under this program must know in order to develop an application for funding consideration for either a company/plant, area-wide, industry, or public sector labor-management committee. Directions for obtaining an application kit may be found in section H. A copy of the Labor-Management Cooperation Act of 1978, included in the application kit, should be reviewed in conjunction with this solicitation.

B. Program Description

Objectives

The Labor-Management Cooperation Act of 1978 identifies the following seven general areas for which financial assistance would be appropriate:

(1) To improve communication between representatives of labor and management;

(2) To provide workers and employers with opportunities to study and explore new and innovative joint approaches to achieving organizational effectiveness;

(3) To assist workers and employers in solving problems of mutual concern not susceptible to resolution within the collective bargaining process;

(4) To study and explore ways of eliminating potential problems which reduce the competitiveness and inhibit the economic development of the company/plant, area, or industry;

(5) To enhance the involvement of workers in making decisions that affect their working lives;

(6) To expand and improve working relationships between workers and managers; and

(7) To encourage free collective bargaining by establishing continuing mechanisms for communication between employers and their employees through Federal assistance in the formation and operation of labor-management committees.

The primary objective of this program is to encourage and support the establishment and operation of joint labor-management committees to carry out specific objectives that meet the forementioned general criteria. The term ''labor'' refers to employees represented by a labor organization and covered by a formal collective bargaining agreement. These committees may be found at either the plant (company), area, industry, or public sector levels. A plant or company committee is generally characterized as restricted to one or more organizational or productive units operated by a single employer. An area committee is generally composed of multiple employers of diverse industries as well as multiple labor unions operating within the focusing upon city, county, contiguous multicounty, or statewide jurisdictions. An industry committee generally consists of a collection of agencies or enterprises and related labor union(s) producing a common product or service in the private sector on a local, state, regional, or nationwide level. A public sector committee consists either of government employees and managers in one or more units of a local or state government, managers and employees of public institutions of higher education, or of employees and managers of public elementary and secondary schools. Those employees must be covered by a formal collective bargaining agreement or other enforceable labor-management agreement. In deciding whether an application is for an area or industry committee, consideration should be given to the above definitions as well as to the focus of the committee.

In FY 1999, competition will be open to company/plant, area, private industry, and public sector committees. Public Sector committees will be divided into two sub-categories for scoring purposes. One sub-category will consist of committees representing state/local units of government and public institutions of higher education. The second sub-category will consist of public elementary and secondary schools.

Special consideration will be given to committee applications involving innovative or unique efforts. All application budget requests should focus directly on supporting the committee. Applicants should avoid seeking funds for activities that are clearly available under other Federal programs (e.g., job training, mediation of contract disputes, etc.).

Required Program Elements

1. *Problem Statement*—The application, which should have numbered pages, must discuss in detail what specific problem(s) face the company/plant, area, government, or industry and its workforce that will be addressed by the committee. Applicants must document the problem(s) using as much relevant data as possible and discuss the full range of impacts these problem(s) could have or are having on the company/plant, government, area, or industry. An industrial or economic profile of the area and workforce might prove useful in explaining the problem(s). This section basically discusses *WHY* the effort is needed.

2. *Results or Benefits Expected*—By using specific goals and objectives, the application must discuss in detail *WHAT* the labor-management committee as a demonstration effort will accomplish during the life of the grant. Applications that promise to provide objectives *after* a grant is awarded will receive little or no credit in this area. While a goal of ''improving

communication between employers and employees'' may suffice as one over-all goal of a project, the objectives must, whenever possible, to expressed in specific and *measurable* terms. Applicants should focus on the outcome, impacts or changes that the committee's efforts will have. Existing committees should focus on *expansion* efforts/results expected from FMCS funding. The goals, objectives, and projected impacts will become the foundation for future monitoring and evaluation efforts of the grantee, as well as the FMCS grants program.

3. *Approach*—This section of the application specifies *HOW* the goals and objectives will be accomplished. At a minimum, the following elements must be included in all grant applications:

(a) A discussion of the strategy the committee will employ to accomplish its goals and objectives;

(b) A listing, by name and title, of all existing or proposed members of the labor-management committee. The application should also offer a rationale for the selection of the committee members (e.g., members represent 70% of the area or company/plant workforce).

(c) A discussion of the number, type, and role of all committee staff persons. Include proposed position descriptions for all staff that will have to be hired as well as resumes for staff already on board;

(d) In addressing the proposed approach, applicants must also present their justification as to why Federal funds are needed to implement the proposed approach;

(e) A statement of how often the committee will meet (we require meetings at least every other month) as well as any plans to form subordinate committees for particular purposes; and

(f) For applications from existing committees (i.e., in existence at least 12 months prior to the submission deadline), a discussion of past efforts and accomplishments and how they would integrate with the proposed expanded effort.

4. *Major Milestones*—This section must include and implementation plan that indicates what major steps, operating activities, and objectives will be accomplished as well as a timetable for WHEN they will be finished. A milestone chart must be included that indicates what specific accomplishments (process and impact) will be completed by month over the life of the grant using September 15, 1999, as the start date. The accomplishment of these tasks and objectives, as well as problems and delays therein, will serve as the basis for quarterly progress reports to FMSC.

5. *Evaluation*—Applicants must provide for either an external evaluation or an internal assessment of the project's success in meeting its goals and objectives. An evaluation plan must be developed which briefly discusses what basic questions or issues the assessment will examine and what baseline data the committee staff already has or will gather for the assessment. This section should be written with the application's own goals and objectives clearly in mind and the impacts or charges that the effort is expected to cause.

6. *Letters of Commitment*—Applications must include current letters of commitment for *all* proposed or existing committee participants and chairpersons. These letters should indicate that the participants support the application and will attend scheduled committee meetings. A blanket letter signed by a committee chairperson or other official on behalf of all members is not acceptable. We encourage the use of individual letters submitted on company or union letterhead represented by the individual. The letters should match the names provided under Section 3(b).

7. *Other Requirements*—Applicants are also responsible for the following:

(a) The submission of data indicating approximately how many employees will be covered or represented through the labor-management committee;

(b) From existing committees, a copy of the existing staffing levels, a copy of the by-laws, a breakout of annual operating costs and identification of all sources and levels of current financial support;

(c) A detailed budget narrative based on policies and procedures contained in the FMCS Financial and Administrative Grants Manual;

(d) An assurance that the labor-management committee will not interfere with any collective bargaining agreements; and

(e) An assurance that committee meetings will be held at least every other month and that written minutes of all committee meetings will be prepared and made available to FMCS.

Selection Criteria

The following criteria will be used in the scoring and selection of applications for award:

(1) The extent to which the application has clearly identified the problems and justified the needs that the proposed project will address.

(2) The degree to which appropriate and *measurable* goals and objectives have been developed to address the problems/needs of the applicant.

(3) The feasibility of the approach proposed to attain the goals and objectives of the project and the perceived likelihood of accomplishing the intended project results. This section will also address the degree of innovativeness or uniqueness of the proposed effort.

(4) The appropriateness of committee membership and the degree of commitment of these individuals to the goals of the application as indicated in the letters of support.

(5) The feasibility and thoroughness of the implementation plan in specifying major milestones and target dates.

(6) The cost effectiveness and fiscal soundness of the application's budget request, as well as the application's feasibility vis-a-vis its goals and approach.

(7) The overall feasibility of the proposed project in light of all of the information presented for consideration; and

(8) The value to the government of the application in light of the overall objectives of the Labor-Management Cooperation Act of 1978. This includes such factors as innovativeness, site location, cost, and other qualities that impact upon an applicant's value in encouraging the labor-management committee concept.

C. Eligibility

Eligible grantees include state and local units of government, labor-management committees (or a labor union, management association, or company on behalf of a committee that will be created through the grant), and certain third-party private non-profit entities on behalf of one or more committees to be created through the grant. Federal government agencies and their employees are not eligible.

Third-party private, non-profit entities which can document that a major purpose or function of their organization has been the improvement of labor relations are eligible to apply. However, all funding must be directed to the functioning of the labor-management committee, and all requirements under Part B must be followed. Applications from third-party entities must document particularly strong support and participation from all labor and management parties with whom the applicant will be working. Applications from third-parties which do not directly support the operation of a new or expanded committee will not be deemed eligible, nor will applications signed by entities such as

law firms or other third-parties failing to meet the above criteria.

Applicants who received funding under this program in the past for committee operations are generally not eligible to apply. The only exceptions apply to grantees who seek funds on behalf of an entirely different committee.

D. Allocations

The total FY 1999 appropriation for this program is $1.5 million, of which at least $1,000,000 will be available competitively for new applicants. Specific funding levels will not be established for each type of committee. Instead, the review process will be conducted in such a manner that at least two awards will be made in each category (company/plant, industry, public sector, and area), providing that FMCS determines that at least two outstanding applications exist in each category. After these applications are selected for award, the remaining applications will be considered according to merit without regard to category.

In addition to the competitive process identified in the preceding paragraph, FMCS will set aside a sum not to exceed thirty percent of its non-reserved appropriation to be awarded on a non-competitive basis. Neither the dollar range of awards set forth in paragraph E of this solicitation, nor the provisions relating to deadline set forth in paragraph G, shall be applicable to such funds. These funds will be used to support company/plant, area, industry, or public sector initiatives with high potential for widespread replication that have been solicited by the Director of the Service.

FMCS reserves the right to retain up to five percent of the FY99 appropriation to contract for program support purposes (such as evaluation) other than administration.

E. Dollar Range and Length of Grants and Continuation Policy

Awards to continue and expand existing labor-management committees (i.e., in existence 12 months prior to the submission deadline) will be for a period of 12 months. If all of the original funding is not obligated within 12 months, FMCS will consider grant period extensions for up to an additional six months. No continuation awards are anticipated. Initial awards to establish new labor-management committees (i.e., not yet established or in existence less than 12 months prior to the submission deadline), will be for a period of 18 months. If successful progress is made during this initial budget period and all grant funds are not obligated within 18 months, these grants may be extended for up to six months. No continuation awards are anticipated.

The dollar range of awards is as follows:

—Up to $35,000 in FMCS funds per annum for existing company/plant or single department public sector applicants;
—Up to $50,000 over 18 months for new company/plant committee or single department public sector applicants;
—Up to $75,000 in FMCS funds per annum for existing area, industry and multi-departmental public sector committee applicants;
—Up to $100,000 per 18-month period for new area, industry, and multi-department public sector committee applicants.

Applicants are reminded that these figures represent maximum Federal funds only. If total costs to accomplish the objectives of the application exceed the maximum allowable Federal funding level and its required grantee match, applicants may supplement these funds through voluntary contributions from other sources. Applicants are also strongly encouraged to consult with their local or regional FMCS field office to determine what kinds of training may be available at no cost before budgeting for such training in their applications. A list of our field leadership team and their phone numbers is included in the application kit.

F. Cash Match Requirements and Cost Allowability

Applicants for new labor-management committees must provide at least 10 percent of the total allowable project costs. Applicants for existing committees must provide at least 25 percent of the total allowable project costs. All matching funds may come from state or local government sources or private sector contributions, but may generally not include other Federal funds. Funds generated by grant-supported efforts are considered ''project income,'' and may not be used for matching purposes.

It will be the policy of this program to reject all requests for indirect or overhead costs as well ''in-kind'' match contributions. In addition, grant funds must not be used to supplant private or local/state government funds currently spent for these purposes. Funding requests from existing committees should focus entirely on the costs associated with the expansion efforts. Also, under no circumstances may business or labor officials participating on a labor-management committee be compensated out of grant funds for *time* spent at committee meetings or *time* spent in training sessions. Applicants generally will not be allowed to claim all or a portion of *existing* full-time staff as an expense or match contribution. For a more complete discussion of cost allowability, applicants are encouraged to consult the FY99 FMCS Financial and Administrative Grants Manual which will be included in the application kit.

G. Application Submission and Review Process

Applications should be signed by *both* a labor and management representative and be postmarked no later than May 1, 1999. No applications or supplementary materials can be accepted after the deadline. It is the responsibility of the applicant to ensure that the application is correctly postmarked by the U.S. Postal Service or other carrier. An original application containing numbered pages, plus *three* copies, should be addressed to the Federal Mediation and Conciliation Service, Labor-Management Grants Program, 2100 K Street, NW, Washington, DC 20427. FMCS will not consider videotaped submissions or video attachments to submissions.

After the deadline has passed, all eligible applications will be reviewed and scored initially by one or more Grant Review Boards. The Board(s) will recommend selected applications for further funding consideration. The Director, Program Services, will finalize the scoring and selection process. The individual listed as contact person in Item 6 on the application form will generally be the only person with whom FMCS will communicate during the application review process.

All FY99 grant applicants will be notified of results and all grant awards will be made before September 15, 1999. Applications submitted after the May 1, deadline date or that fail to adhere to eligibility or other major requirements will be administratively rejected by the Director, Program Services.

H. Contact

Individuals wishing to apply for funding under this program should contact the Federal Mediation and Conciliation Service as soon as possible to obtain an application kit.

These kits and additional information or clarification can be obtained free of charge by contacting the Federal Mediation and Conciliation Service, Labor-Management Grants Program,

2100 K Street, NW, Washington, DC 20427; or by calling 202–606–8181.

Dated: May 5, 1999.

Tom O'Brien,

Deputy Director Designee, Federal Mediation and Conciliation Service.

[FR Doc. 99–12181 Filed 5–13–99; 8:45 am]

BILLING CODE 6732–01–M

FEDERAL RESERVE SYSTEM

Change in Bank Control Notices; Acquisitions of Shares of Banks or Bank Holding Companies

The notificants listed below have applied under the Change in Bank Control Act (12 U.S.C. 1817(j)) and § 225.41 of the Board's Regulation Y (12 CFR 225.41) to acquire a bank or bank holding company. The factors that are considered in acting on the notices are set forth in paragraph 7 of the Act (12 U.S.C. 1817(j)(7)).

The notices are available for immediate inspection at the Federal Reserve Bank indicated. The notices also will be available for inspection at the offices of the Board of Governors. Interested persons may express their views in writing to the Reserve Bank indicated for that notice or to the offices of the Board of Governors. Comments must be received not later than May 28, 1999.

A. Federal Reserve Bank of Atlanta (Lois Berthaume, Vice President) 104 Marietta Street, N.W., Atlanta, Georgia 30303-2713:

1. Willson Management and Development Partnership, L.P., Athens, Tennessee; to acquire voting shares of Citizens National Bancorp, Athens, Tennessee, and thereby indirectly acquire Citizens National Bank, Athens, Tennessee.

Board of Governors of the Federal Reserve System, May 10, 1999.

Robert deV. Frierson,

Associate Secretary of the Board.

[FR Doc. 99–12185 Filed 5-13-99; 8:45 am]

BILLING CODE 6210-01-F

DEPARTMENT OF HEALTH AND HUMAN SERVICES

Centers for Disease Control and Prevention

[Program Announcement 99075]

Cooperative Agreement for a Laboratory Medicine Sentinel Monitoring Network; Notice of Availability of Funds

A. Purpose

The Centers for Disease Control and Prevention (CDC) announces the availability of fiscal year (FY) 1999 funds for a cooperative agreement for a Laboratory Medicine Sentinel Monitoring Network. This program addresses the ''Healthy People 2000'' priority area of Surveillance and Data Systems. The purposes of the program are to develop data collection networks and provide information about the practice of laboratory medicine in hospitals, physician offices, and independent laboratories.

B. Eligible Applicants

Assistance will be provided only to the health departments of States or their bona fide agents, including the District of Columbia, the Commonwealth of Puerto Rico, the Virgin Islands, the Commonwealth of the Northern Mariana Islands, American Samoa, Guam, federally recognized Indian tribal governments, the Federated States of Micronesia, the Republic of the Marshall Islands, and the Republic of Palau. In consultation with States, assistance may be provided to political subdivisions of States. We are limiting eligibility to State health departments because:

1. They are uniquely qualified due to the role they play in coordinating CLIA-associated activities within the states;
2. They possess the experience with laboratory issues that can facilitate the recruitment of network members; and
3. To provide assistance to these organizations and to implement long term laboratory medicine monitoring programs.

C. Availability of Funds

Approximately $300,000 is available in FY 1999 to fund three awards. It is expected that the average award will be $100,000, ranging from $80,000 to $120,000. It is expected that the awards will begin on or about September 30, 1999, and will be made for a 12-month budget period within a project period of up to 3 years. Funding estimates may change.

Continuation awards within an approved project period will be made on the basis of satisfactory progress as evidenced by required reports and the availability of funds.

D. Funding Preferences

Preference may be given to State health departments with existing laboratory networks (data collection networks comprised of clinical laboratories which periodically monitor and report on issues related to the delivery of clinical laboratory medicine and quality assurance programs associated with them). Additional preference may be given to achieve an even geographic distribution of sites or to a site that primarily includes a rural population.

E. Program Requirements

In conducting activities to achieve the purpose of this program, the recipient will be responsible for the activities listed under 1. (Recipient Activities), and CDC will be responsible for those activities listed under 2. (CDC Activities).

1. Recipient Activities

a. Solicit laboratories to voluntarily participate in the Monitoring Networks so that representatives of each laboratory type (hospital, physician office, and independent) and complexity level (waived, PPM, moderate and high) can participate in the total network.

b. Provide leadership in the design and evaluation of questionnaires for periodic reporting of laboratory operational characteristics and problems (especially those that impact patient care, including QC and QA practices, and the methods that are used by the network participants during the period of the study).

c. Provide leadership in collecting and sharing raw data within the network.

d. Periodically send the developed questionnaires to network participants for them to gather and submit the response data back, and enter, analyze, and summarize the data for the participants in a statistically valid manner.

e. Distribute reports to network members for self-evaluation and improvement. Make information available to other laboratories in the region.

f. Prepare manuscripts for peer-review publications.

2. CDC Activities

a. Collaborate in identifying those areas of laboratory medicine that have public health concerns.

b. Provide technical assistance with questionnaire development, data gathering devices, statistical analysis, and writing summaries of the results.

c. Collaborate in the development of a defined data set standard for transmission of raw data.

F. Application Content

Use the information in the Program Requirements, Other Requirements, and Evaluation Criteria sections to develop the application content. Your application will be evaluated on the criteria listed, so it is important to follow them in laying out your program plan. The narrative should be no more than 20 double-spaced pages, printed on one side, with one inch margins, and with type no smaller than 12 point CPI, on 8.5″ x 11″ paper.

G. Submission and Deadline

Submit the original and two copies of PHS 5161–1 (OMB Number 0937–0189). Forms are in the application kit.

On or before July 12, 1999, submit the application to the Grants Management Specialist identified in the ''Where to Obtain Additional Information'' section of this announcement.

1. Deadline

Applications shall be considered as meeting the deadline if they are either:

(a) Received on or before the deadline date; or

(b) Sent on or before the deadline date and received in time for the independent review group. (Applicants must request a legibly dated U.S. Postal Service postmark or obtain a legibly dated receipt from a commercial carrier or U.S. Postal Service. Private metered postmarks shall not be acceptable as proof of timely mailing.)

2. Late Applications

Applications which do not meet the criteria in (a) or (b) above are considered late applications, will not be considered, and will be returned to the applicant.

H. Evaluation Criteria

Each application will be evaluated individually against the following criteria by an independent review group appointed by CDC.

1. Goals and Objectives (20 Points)

a. The extent to which the applicant describes its understanding of the objectives of the proposed cooperative agreement, the relevance of its proposal to the stated objectives, and any unique characteristics of populations to be studied.

b. The extent to which the applicants goals and objectives are time-phased, measurable, specific, and achievable.

2. Project Management and Staffing (30 Points)

a. The extent to which the applicant describes its ability to provide staff, knowledge, and other resources required to perform the responsibilities in this project.

b. The extent to which the applicant describes its qualifications and time allocations of key personnel to be assigned to this project and the facilities and equipment, and other resources available for performance of this project.

3. Plan of Operation (30 Points)

a. The extent to which the applicant describes the methods to be used in carrying out the responsibilities of this project, including the ability to provide the representative participants in the laboratory group or groups they will monitor.

b. The extent to which the applicant describes the steps to be taken in the planning and implementation of this project.

4. Evaluation Plan (20 Points)

The extent to which the applicant describes its schedule for accomplishing the activities to be carried out in this project and methods for evaluating the accomplishments.

5. Proposed Budget (Not Scored)

The extent to which the budget is reasonable, clearly justified, and consistent with the intended use of funds.

I. Other Requirements

Technical Reporting Requirements

Provide CDC with the original plus two copies of

1. Progress reports (semiannual);
2. Financial status report, no more than 90 days after the end of the budget period; and
3. Final financial and performance reports, no more than 90 days after the end of the project period.

Send all reports to the Grants Management Specialist identified in the ''Where to Obtain Additional Information'' section of this announcement.

The following additional requirements are applicable to this program. For a complete description of each, see Addendum 1.

AR–7 Executive Order 12372 Review

AR–8 Public Health System Reporting Requirement

AR–9 Paperwork Reduction Act Requirements

AR–10 Smoke-Free Workplace Requirements

AR–11 Healthy People 2000

AR–12 Lobbying Restrictions

J. Authority and Catalog of Federal Domestic Assistance Number

This program is authorized under section 317(k)(3) of the Public Health Service Act, [42 U.S.C. section 247b(k)(3)], as amended. The Catalog of Federal Domestic Assistance number is 93.283.

K. Where To Obtain Additional Information

This and all other CDC Announcements may be found and downloaded from the CDC homepage. Internet address: http://www.cdc.gov (click on funding).

To receive additional written information and to request an application kit, call 1–888–GRANTS4 (1–888–472–6874). You will be asked to leave your name and address and will be instructed to identify the Announcement number of Interest.

If you have questions after reviewing the contents of all the documents, business management technical assistance may be obtained from: Ricky Willis, Grants Management Specialist, Grants Management Branch, Procurement and Grants Office, Announcement 99075, Centers for Disease Control and Prevention, 2920 Brandywine Road, Suite 3000, Mailstop E–13, Atlanta, GA 30341–4146, Telephone: (770) 488–2719, E-mail address: rqw0@cdc.gov.

For program technical assistance contact: Marianne K. Simon, Health Scientist, Division of Laboratory Systems, Public Health Practice Program Office, Centers for Disease Control and Prevention, 4770 Buford Highway, N.E., Mailstop G–23, Atlanta, GA 30341, Telephone: (770) 488–8125, E-mail address: mks2@cdc.gov.

Dated: May 10, 1999.

John L. Williams,

Director, Procurement and Grants Office, Centers for Disease Control and Prevention (CDC).

[FR Doc. 99–12207 Filed 5–13–99; 8:45 am]

BILLING CODE 4163–18–P

DEPARTMENT OF HEALTH AND HUMAN SERVICES

Centers for Disease Control and Prevention

[Program Announcement 99118]

Cooperative Agreement for Applied Research on Surveillance of Vaccine Preventable Diseases in Managed Care Settings; Notice of Availability of Funds

A. Purpose

The Centers for Disease Control and Prevention (CDC) National Immunization Program (NIP) in cooperation with the Office of Prevention Research, announces the availability of fiscal year (FY) 1999 funds for a cooperative agreement program for Applied Research on Surveillance of Vaccine Preventable Diseases in Managed Care Settings.

The purpose of this program is to fund research designed to enhance the ability of managed care organizations to conduct surveillance for vaccine preventable diseases in the United States. This program addresses the ''Healthy People 2000'' priority area of Immunization and Infectious Diseases.

B. Eligible Applicants

Applications may be submitted by public and private non-profit and for profit organizations and by governments and their agencies; that is, universities, colleges, research institutions, hospitals, managed care organizations, small, minority-owned businesses, other public and private nonprofit and profit organizations, State and local governments or their bona fide agents, and federally recognized Indian tribal governments, Indian tribes, or Indian tribal organizations.

Note: Pub. L. 104–65 states that an organization described in section 501(c)(4) of the Internal Revenue Code of 1986 that engages in lobbying activities is not eligible to receive Federal funds constituting an award, grant, cooperative agreement, contract, loan, or any other form.

C. Availability of Funds

Approximately $435,000 will be available in FY 1999 to award up to two projects. It is expected that the average award will be $217,500. It is expected that the awards will begin on or about September 1, 1999, and will be made for a 12-month budget period within a project period of 1 year. Funding estimates may change.

D. Program Interests

Applications must address a programmatic interest area as noted below. Applications which propose research studies whose findings have a high probability of being translated into new recommendations for vaccine use by national advisory bodies or whose findings are likely to lead to decreases in vaccine preventable disease morbidity or mortality are encouraged. Examples of possible projects are also given below; these examples are not to be considered as an exhaustive list but include projects NIP views as exemplifying the priority areas.

1. Disease Burden

The use of surveillance information to better define the magnitude of the disease burden posed by vaccine preventable diseases. In particular, there is interest in the disease burden posed by diseases recently made vaccine preventable or about to be made vaccine preventable. Second, there is interest in the disease burden posed by diseases which have been vaccine preventable but where the vaccine is being considered for use in new target groups.

For example, there is interest in improving the detection of pertussis in adolescents and enhancing clinical and laboratory diagnosis to define disease burden in this group.

2. New Approaches to Surveillance

The use of managed care information systems to facilitate ascertainment and reporting of cases of vaccine preventable diseases.

For example, there is interest in the use of electronic medical records to identify potential cases of vaccine preventable diseases for clinical and epidemiological follow-up and for reporting to public health agencies.

Also, there is interest in the evaluation of different approaches for improving the clinical index of suspicion and the application of appropriate diagnostic methods to detect uncommon vaccine preventable diseases.

3. Vaccine Impact

Monitoring the impact of vaccination programs through the use of surveillance data.

For example, there is interest in estimating the impact of rotavirus vaccine in decreasing utilization of health care services.

E. Program Requirements

In conducting activities to achieve the purposes of this program, the recipient will be responsible for the activities under 1. Recipient Activities, and CDC will be responsible for the activities under 2. CDC Activities.

1. Recipient Activities

(a) Design the study: Determine the approaches to take in addressing the questions of interest in the study and develop a study protocol.

(b) Implement the study protocol: Conduct the study according to the protocol and will resolve problems in study implementation as they arise.

(c) Analyze data: Plan the analytic approach to be taken to understand and interpret the principal findings from the study.

(d) Prepare manuscripts and publish results: Prepare a written manuscript describing the main study findings for publication in a peer reviewed journal.

2. CDC Activities

(a) Provide technical and programmatic information: CDC scientists will provide current scientific and programmatic information relevant to the project.

(b) Assist in executing the study: CDC scientists will collaborate as appropriate in each phase of the study including design, implementation, analysis, and publication. Depending on the project funded and on availability, CDC may provide laboratory support.

(c) Assist in the development of a research protocol for Institutional Review Board (IRB) review by all cooperating institutions participating in the research project.

The CDC IRB will review and approve the protocol initially and on at least an annual basis until the research project is completed.

Application Content

Use the information in the Program Requirements, Other Requirements, and Evaluation Criteria sections to develop the application content. Your application will be evaluated on the criteria listed, so it is important to follow them in laying out your program plan.

F. Submission and Deadline

Letter of Intent (LOI)

Your letter of intent should identify the announcement number, the intended submission deadline, name the principal investigator, and specify the study area addressed by the proposed project. The letter of intent must be submitted on or before June 15, 1999, to: Sharron Orum, Grants Management Specialist, Grants Management Branch, Procurement and Grants Office, Announcement 99118, Centers for Disease Control and Prevention (CDC), 2920 Brandywine Road, Room 3000, Atlanta, GA 30341–4146.

Application

Submit the original and five copies of PHS–398 (OMB Number 0925–0001) (adhere to the instructions on the Errata Instruction Sheet for PHS 398) on or before July 15, 1999, to: Sharron Orum, Grants Management Specialist, Grants Management Branch, Procurement and Grants Office, Announcement 99118, Centers for Disease Control and Prevention (CDC), 2920 Brandywine Road, Room 3000, Atlanta, GA 30341–4146.

Deadline: Applications shall be considered as meeting the deadline if they are either:

(a) Received on or before the deadline date; or

(b) Sent on or before the deadline date and received in time for orderly processing. (Applicants must request a legibly dated U.S. Postal Service postmark or obtain a legibly dated receipt from a commercial carrier or U.S. Postal Service. Private metered postmarks shall not be acceptable as proof of timely mailing.)

Late Applications: Applications which do not meet the criteria in (a) or (b) above are considered late applications, will not be considered, and will be returned to the applicant.

G. Evaluation Criteria

Applications that are complete and responsive may be subjected to a preliminary evaluation (triage) by a peer review group to determine if the application is of sufficient technical and scientific merit to warrant further review; the CDC will withdraw from further consideration applications judged to be noncompetitive and promptly notify the principal investigator/program director and the official signing for the applicant organization. Those applications judged to be competitive will be further evaluated by a dual review process. Awards will be made based on priority by Peer Review, programmatic priorities and needs as determined by the secondary review panel, and the availability of funds.

A. The first review will be a peer review of all applications. Evaluation factors will include:

1. The specific aims of the research project, i.e. the objectives and the hypothesis to be tested.

2. The background of the proposal, e.g., the basis for the present proposal, a critical evaluation of existing knowledge, and the knowledge gaps which the proposal is intending to fill.

3. The description of the expected outcome(s), their relevance to program goals, and the extent to which the research findings are likely to improve surveillance of vaccine preventable diseases.

4. The adequacy of the study plan that describes the specific, measurable objectives and the methods by which the objectives will be achieved.

5. The progress of preliminary studies, if any, pertinent to the application.

6. The adequacy of the proposed research design, approaches, and methodology to carry out the research, including quality assurance procedures and plans for data management and statistical analyses.

7. Qualifications, adequacy, and appropriateness of personnel to accomplish the proposed activities.

8. The degree of commitment and cooperation of other interested parties (as evidenced by letters detailing the nature and extent of the involvement).

9. The reasonableness of the proposed budget to the proposed research.

10. Adequacy of existing and proposed facilities and resources.

11. Inclusion of Women and Racial and Ethnic Minorities in Research.

The degree to which the applicant has met the CDC Policy requirements regarding the inclusion of women, ethnic, and racial groups in the proposed research. This includes:

a. The proposed plan for the inclusion of both sexes and racial and ethnic minority populations for appropriate representation.

b. The proposed justification when representation is limited or absent.

c. A statement as to whether the design of the study is adequate to measure differences when warranted.

d. A statement as to whether the plans for recruitment and outreach for study participants include the process of establishing partnerships with community(ies) and recognition of mutual benefits.

12. Human Subjects

The extent to which the application adequately addresses the requirements of Title 45 CFR Part 46 for the protection of human subjects.

B. The second review will be conducted by a secondary review committee of senior Federal officials. The factors to be considered will include:

1. The results of the peer review.

2. The significance of the proposed activities in relation to the priorities and objectives stated in Healthy People 2000;

3. National needs.

4. Budgetary considerations.

5. Program balance among the major areas of interest:

(a) Disease Burden.

(b) New Approaches to Surveillance.

(c) Vaccine Impact.

H. Other Requirements

Technical Reporting Requirements

Provide CDC with original plus two copies of:

1. Progress reports semiannual;

2. Financial status report, no more than 90 days after the end of the budget period; and

3. Final financial status and performance reports, no more than 90 days after the end of the project period.

Send all reports to the Grants Management Specialist identified in the ''Where to Obtain Additional Information'' section of this announcement.

The following additional requirements are applicable to this program. For a complete description of each, see Attachment I in the application kit.

AR–1 Human Subjects Requirements
AR–2 Requirements for Inclusion of Women and Racial and Ethnic Minorities in Research
AR–9 Paperwork Reduction Act Requirements
AR–10 Smoke-Free Workplace Requirements
AR–11 Healthy People 2000
AR–12 Lobbying Restrictions

I. Authority and Catalog of Federal Domestic Assistance Number

This program is authorized under Sections 301 and 307 of the Public Health Service Act, 42 U.S.C. section 241 and 242l. The Catalog of Federal Domestic Assistance Number is 93.185.

J. Where To Obtain Additional Information

This and other CDC Announcements may be downloaded from the CDC Internet homepage http://www.cdc.gov. Click on ''funding.''

To receive additional written information and to request an application kit, call 1–888–GRANTS4 (1–888–472–6874). You will be asked to leave your name and address and will be instructed to identify the Announcement number of interest.

If you have questions after reviewing the contents of all the documents, business management technical assistance may be obtained from: Sharron Orum, Grants Management Specialist, Grants Management Branch, Procurement and Grants Office, Announcement 99118, Centers for Disease Control and Prevention (CDC), 2920 Brandywine Road, Room 3000, Atlanta, GA 30341–4146, Telephone: (770) 488–2716, E-mail: SPO2@cdc.gov.

For program technical assistance, contact: Roger Bernier, PhD, MPH, National Immunization Program, Centers for Disease Control and Prevention, 1600 Clifton Road, NE., MS–E05, Atlanta, Georgia, 30333, Telephone: (404) 639–8204, E-mail: rhb2@cdc.gov.

Dated: May 10, 1999.

John L. Williams,

Director, Procurement and Grants Office, Centers for Disease Control and Prevention (CDC)

[FR Doc. 99–12205 Filed 5–13–99; 8:45 am]

BILLING CODE 4163–18–P

DEPARTMENT OF HEALTH AND HUMAN SERVICES

Centers for Disease Control and Prevention

Government-Owned Inventions; Availability for Licensing

AGENCY: Centers for Disease Control and Prevention (CDC), Department of Health and Human Services (DHHS).

ACTION: Notice.

The inventions named in this notice are owned by agencies of the United States Government and are available for licensing in the United States (U.S.) in accordance with 35 U.S.C. 207 to achieve expeditious commercialization of results of federally funded research and development. Foreign patent applications are filed on selected inventions to extend market coverage for U.S. companies and may also be available for licensing.

ADDRESSES: Licensing information and copies of the U.S. patent applications listed below may be obtained by writing to Thomas E. O'Toole, M.P.H., Deputy Director, Technology Transfer Office, Centers for Disease Control and Prevention (CDC), Mailstop E–67, 1600 Clifton Rd., Atlanta, GA 30333, telephone (404) 639–6270; facsimile (404) 639–6266. Please note that a signed Confidential Disclosure Agreement will be required to receive copies of the patent applications.

Oligonucleotide Probes for Detecting Enterobacteriaceae and Quinolone-ResistantEnterobacteriaceae

Specific oligonucleotide probes have been developed to be incorporated into methods for the species-specific identification of these *Enterobacteriaceae* in a sample as well as detection and diagnosis of *Enterobacteriaceae* infection in a subject. This invention further provides methods for species-specific identification of these quinolone-resistant *Enterobacteriaceae* as well as the detection and diagnosis thereof.

Inventor: Linda M Weigel, et al.
U.S. Patent Application SN: 60/080,375 (CDC Ref. #: I–003–98/0)

Compositions and Methods for Detecting Adult *Taenia Solium*

Compositions and methods for the detection of adult *Taenia solium* and the diagnosis and treatment of *T. solium* infection are described. The compositions contain one or more adult *T. solium* polypeptides which can be useful as diagnostic agents for the detection of adult tapeworm infection.

Inventor: Victor Tsang, et al.
U.S. Patent Application SN: 60/111,334 (CDC Ref. #: I–028–97/0)

Recombinant Multi-Valent Malarial Vaccine

This invention relates generally to the development and use of a recombinant, multi-valent and multi-stage malaria vaccine and more specifically relates to an antigenic protein useful for preventing or treating *P. falciparum* malarial infections. The invention further provides a vaccine against malaria that is effective in inhibiting reproductive growth of the parasite within a human or animal after initial infection. Also, this invention provides a method for conferring immunity against different stages in the life cycle of the malarial parasite, *P. falciparum*. Furthermore, the invention includes antibodies against a recombinant protein containing antigenic epitopes to various stages of a malarial Plasmodium species that may be useful as research or diagnostic reagents for the detection and measurement of *P. falciparum* in a biological sample.

Inventor: Altaf A. Lal, et al.
U.S. Patent Application SN: 60/097,703 (CDC Ref. #: I–004–98/0)

Reagent and Method for Detecting *Cryptosporidium Parvum* Oocysts

A reagent and method for the specific and highly sensitive detection of *C. parvum* in which the reagent is an antibody for a soluble *C. parvum* sporozoite antigen. The method comprises of an immunoassay in which the antibody is used to detect or quantify *C. parvum* sporozoite in a sample. The assay allows recognition and detection of *C. parvum* in turbid samples. And since there exists a lack of crossreactivity with other *Cryptosporidium* species, the assay is also highly specific for *C. parvum* contamination or infection.

Inventor: Victor Tsang, et al.
U.S. Patent Application SN: 60/111,225 (CDC Ref. #: I–039–98/0)

Isolation of a New Human Retrovirus

A new isolate of a human retrovirus has been identified in several cases of foamy virus infection in persons at risk for this occupational exposure to simian retroviruses. This new isolate demonstrates a number of phenotypic differences from previously isolated foamy viruses by its immune reactivity, cell tropism, cytopathcity and growth kinetics. Due to its human-derived/adapted nonpathogenic nature, this new isolate may be suitable as a potential gene therapy vector.

Inventor: Paul A. Sandstrom
U.S. Patent Application SN: 60/105,811 (CDC Ref. #: I–034–97/0)

Methods and Compositions for the Detection of Human Herpesvirus

Methods and compositions for the detection and diagnosis of infectious diseases are provided. In particular, efficient and sensitive compositions and methods for the detection of human herpesvirus 8 are provided. The diagnostic compositions and methods of the invention involve the use of peptides representative of dominant antigenic regions of human herpesvirus in detection assays. Such assays are highly specific, sensitive and accurate.

Inventor: Chou-Pong Pau
U.S. Patent Application SN 60/086,695 (CDC Ref. #: I–018–98/0)

Methods and Reagents for Molecular Detection of HIV–1 Groups M, N, and O

This invention provides reagents and assays for detecting HIV–1 groups M and O and optionally HIV–1 group N and SIVcpz. Nucleic acid primers for the hybridization to, amplification and subsequent detection are also provided for. The nucleic acid amplification assays can detect small concentrations of HIV and are also useful for qualitative and quantitative examinations.

Inventor: Renu B. Lal, et al.
U.S. Patent Application SN: 60/118,357 (CDC Ref. #: I–020–98/0)

Nucleic Acid Vaccines for the Prevention of Flavivirus Infection

This novel vaccine for flaviviruses comprises of recombinant nucleic acids that contain genes for structural proteins of flaviviruses, such as Japanese encephalitis virus (JEV). These vaccines serve as a transcriptional unit for the biosynthesis of the virus protein antigens when administered in vivo. Furthermore, the invention provides for a method of immunizing a subject against infection by a flavivirus.

Inventor: Gwong-Jen J. Chang
U.S. Patent Application SN: 60/087,908 (CDC Ref. #: I–008–97/0)

Method and Devices for Detection of Retroviral Infection

This invention comprises of methods, devices and compositions for detection of endogenous retroviruses found in xenotransplant materials. The methods and compositions are suited for detection of endogenous type-C retroviruses and in particular, for porcine endogenous retrovirus (PERV). Detection of such is necessary following xenotransplantation of porcine cellular products.

Inventor: Walid Heneine, et al.
U.S. Patent Application SN 60/090,972 (CDC Ref. #: I–021–98/0)

Methods and Devices for Detection of Xenogeneic Infectious Agents

Compositions, methods and diagnostic devices for monitoring porcine graft integrity and detecting the presence of porcine endogenous retrovirus (PERV) in a biological sample. The compositions, methods and devices are useful for determining or monitoring graft survival and rejection in recipients of xenografts and are useful for detecting PERV infections in a xenotransplant recipient or donor. In addition, the compositions, methods and devices are useful for screening therapeutic products to be administered to humans to ensure that the products are free of PERV contamination prior to administration.

Inventor: Bill Switzer, et al.
U.S. Patent Application SN: 60/093,202 (CDC Ref. #: I–024–98/0)
Associated U.S. Patent Application SN: 60/098,262 (CDC Ref. #≦ I–024–98/1)

Methods for the Prevention and Treatment of Diseases Caused by an Inflammatory Response

This invention provides methods for preventing or treating a disease in a subject caused by an inflammatory response to a disease or syndrome that is mediated by endogenous substance P. The methods include administration of anti-substance P antibodies or anti-substance P antibody fragments.

Inventor: Ralph A. Tripp, et al.
U.S. Patent Application SN: 60/116,835 (CDC Ref. #: I–009–98/0)
13

Preparation and Use of Recombinant Influenza A Virus M2 Constructs in Vaccines

M2, a structurally conserved influenza A viral surface protein, is capable of inducing broader, more cross-reactive immunity to type A influenza viruses. This invention solves the problems of the prior art approaches to recombinant M2 production by providing new recombinant forms of M2 whose structure has been modified to allow simple prokaryotic expression as a soluble, readily purified variant protein which retains antigenic and immunogenic properties. The invention relates to vaccines comprised of these new recombinant forms of M2, and to methods of prevention and treatment of influenza A virus infections.

Inventor: A. Michael Frace, et. al.
U.S. Patent Application SN: 08/906,930 (CDC Ref. #: I–020–97/0)

Method and Kit for Detecting Resistance to Antiviral Drugs

One of the problems with the development of current therapies for HIV infection is that the HIV virus rapidly develops resistance to drugs such as reverse transcriptase inhibitors. This invention provides for an assay and kit for the detection of phenotypic resistance to a reverse transcriptase inhibitor drug in a biological sample.

Inventor: Walid Heneine, et al.
U.S. Patent Application SN: 60/090,051 (CDC Ref. #: I–005–98/0)

Novel Granulocytic Ehrlichia Genes and Uses Thereof

Granulocytic ehrlichiosis is an acute, potentially fatal tick-borne infection. This invention provides for granulocytic ehrlichia specific genes encoding thirteen proteins that can be used as diagnostic reagents and vaccines. Isolated nucleic acid molecules, purified polypeptides, nucleic acid probes, and antibodies to the thirteen proteins are provided for. The recombinant nucleic acid molecule, vectors, cells and many other forms of the molecule are provided for along with the methods and kit for detection.

Inventor: Cheryl I. Murphy, et al.
U.S. Patent Application SN: 09/178,316 (CDC Ref. #: I–011–99/0)

Invasion Associated Genes from *Neisseria Meningitidis* Serogroup B

The invention provides nucleic acids and encoded polypeptides associated with invasion of Neisseria meningitidis. The polypeptides are used as diagnostic reagents, as immunogenic reagents, and as components of vaccines. The nucleic acids are used as diagnostic reagents, as components of vectors and vaccines, and to encode the polypeptides of the invention. The invention also provides strains of Neisseria meningitidis which have an invasion deficient phenotype.

Inventors: Frederick D. Quinn, et. al.
U.S. Patent Application SN: 60/030,432 (Ref. #: I–002–95/0)

Dated: May 10, 1999.

Joseph Carter,

Acting Associate Director for Management and Operations, Centers for Disease Control and Prevention (CDC).

[FR Doc. 99–12204 Filed 5–13–99; 8:45 am]

BILLING CODE 4163–18–P

DEPARTMENT OF HEALTH AND HUMAN SERVICES

Centers for Disease Control and Prevention

Government-Owned Inventions; Availability for Licensing

AGENCY: Centers for Disease Control and Prevention (CDC), Department of Health and Human Services (HHS).

ACTION: Notice.

The inventions named in this notice are owned by agencies of the United States Government and are available for licensing in the United States (U.S.) in accordance with 35 U.S.C. 207 to achieve expeditious commercialization of results of federally funded research and development. Foreign patent applications are filed on selected inventions to extend market coverage for U.S. companies and may also be available for licensing.

ADDRESSES: Licensing information and copies of the U.S. patent applications listed below may be obtained by writing to Thomas E. O'Toole, M.P.H., Deputy Director, Technology Transfer Office, Centers for Disease Control and Prevention (CDC), Mailstop E–67, 1600 Clifton Rd., NE Atlanta, GA 30333, telephone (404) 639–6270; facsimile (404) 639–6266. A signed Confidential Disclosure Agreement will be required to receive copies of the patent applications.

Occupational Safety

Isocyanate Derivatizing Agent and Methods of Production and Use

This invention provides for a novel isocyanate derivatizing agent, 9-anthracenylmethyl-1-piperazinecarbozylate (PAC), that may be useful for the determination of isocyanates in an environmental sample. This agent is capable of derivatizing all isocyanate species. A method for producing PAC as well as a rapid, sensitive, inexpensive and efficient method for measuring the total level of isocyanate in an environmental sample are also provided.

Inventor: Robert P. Streicher

U.S. Patent Application SN 60/085,260 (CDC Ref. #: I–005–97/0)

Ore Pass Level and Blockage Locator Device

This invention comprises of a device that consists of weldable strain gauges attached to inexpensive steel strapping that can be bolted to the interior of an ore pass. This device provides multiple measurement points for the entire length of the ore pass and indicates the ore level in the ore pass and the location of any blockages or hang-ups. Consequently, this information can reduce accidents associated with removing hang-ups by providing an indication of the entire length of the ore pass and indicates the ore level in the ore pass and the location of any blockages or hang-ups.

Inventor: Todd M. Ruff

U.S. Patent Application SN: 60/086,929 (CDC Ref. #: I–006–98/0)

Method for Determination of Hexavalent Chromium Using Ultrasonication and Storing Anion Exchange Solid Phase Extraction

A method for the determination of hexavalent chromium in environmental and industrial hygiene samples is provided. Based on the chemical properties of chromium species in aqueous solutions, a simple, fast, sensitive, and economical field method has been developed and evaluated for the determination of hexavalent chromium. By means of ultrasonic extraction in combination with a strong anion exchange solid phase extraction (SAE-SPE) technique, the filtration, preconcentration, and isolation of the hexavalent chromium in the presence of other chromium species and interferents was achieved. This method can be used in both laboratory and field analysis.

Inventor: Jin Wang, et al.

U.S. Patent Application SN: 60/076,137 (CDC Ref. #: I–010–98/0)

Intrinsically-Safe Hazard Alert Module

This invention relates to an intrinsically-safe roof hazard warning device designed to be attached to the roof hazard warning device designed to be attached to the roof of a mine to indicate unsupported roof or other unsafe conditions. The hazard alert can then direct a person's attention to read the warning message on the module, and thus avoiding the hazard beyond the device. The device of this invention is especially useful in underground mining operations.

Inventor: William D. Mayercheck, et al.

U.S. Patent Application SN: 60/083,677 (CDC Ref. #: I–012–98/0)

Method and Apparatus for Detecting a Temperature Increase in an Electrical Insulator

This invention provides a heat-sensitive warning device and a related method for visually detecting an increase in the temperature of the outer surface of an electrical insulator, which may indicate the unsafe flow of leakage of electrical current. Furthermore, the method and apparatus of the invention provides visual indicia of a temperature increase in the electrical insulator, where this preset temperature is well below an unsafe temperature for the particular electrical insulator so that the insulator may be replaced prior to reaching the unsafe temperature. This invention is particulary useful in underground mining operations.

Inventor: Arthur J. Hudson

U.S. Patent Application SN: 60/087,131 (CDC Ref. #: I–016–97/0)

Method and Apparatus for Load Rate Monitoring

This device monitors the dynamic loading rate on support systems used in underground mines. The device uses a programmable microcontroller to monitor and calculate the loading rates on the support system from pressure transducer(s) or weldable strain gage(s) instrumentation installed on the support system. Furthermore, this invention is programmed to sequentially activate different colored lights and audio alarms as the loading rate increases on the support system. This information can be used as an aid in determining when to install additional support or in determining when to remove equipment and/or personnel from the area before a dangerous roof fall occurs.

Inventor: Wayne Howie, et al.

U.S. Patent Application SN: 60/083,678 (CDC Ref #: I–016–98/0)

Instrumented Cable

The invention describes a novel way of removing a king wire in a cable bolt and molding a new cable bolt king wire with strain gauges on it to measure strain in the cable bolt from the loads applied to the cable. The disclosed method consists of using a piece of strap metal with strain gauges attached to it as the basic wire replacement. This assembly is placed in an injector mold and injected with a nonspecified forming compound to make the attachment for the new instrumented king wire.

Inventor: Lewis A. Martin, et al.

U.S. Patent Application SN: 60/076,138 (CDC Ref. #: I–023–97/0)

Dated: May 10, 1999.

Joseph R. Carter,

Acting Associate Director for Management and Operations, Centers for Disease Control and Prevention (CDC).

[FR Doc. 99–12208 Filed 5–13–99; 8:45 am]

BILLING CODE 4163–18–P

DEPARTMENT OF HEALTH AND HUMAN SERVICES

Centers for Disease Control and Prevention

Prospective Grant of Exclusive License: Dust Detector Tube

AGENCY: Centers for Disease Control and Prevention (CDC), Department of Health and Human Services (DHHS).

ACTION: Notice.

SUMMARY: This is a notice in accordance with 35 U.S.C. 209(c) and 37 CFR 404.7(a) that the Centers for Disease Control and Prevention (CDC), Technology Transfer Office, Department of Health and Human Services (DHHS), is contemplating the grant of a worldwide, limited field of use, exclusive license to practice the invention embodied in the patent application referred to below to SKC, Inc., having a place of business in Eighty-Four, Pennsylvania. The patent rights in this invention have been assigned to the government of the United States of America. The patent application to license is:

Title: Dust Detector Tube.

U.S. Patent Application Serial No.: 60/052,719.

Filing Date: 7.3.97.

The prospective exclusive license will be royalty-bearing and will comply with the terms and conditions of 35 U.S.C. 209 and 37 CFR 404.7.

Current methods of airborne dust sampling and detection require expensive instantaneous and short-term monitors or gravimetric filters. Current gravimetric dust filtering techniques are cumbersome. A need exists for an inexpensive and noncumbersome method to detect personal dust exposure to aid in assuring the respiratory health of workers.

CDC scientists at the Pittsburgh Research Laboratory have invented a dust detection tube device that provides an individual sampling method and apparatus for real-time respirable dust dosimetry for dust exposure assessment. This device can be standardized with other types of gas detection tubes so that it can be used with the same pump system to measure both dust and gas.

ADDRESSES: Requests for a copy of this patent application, inquiries, comments,

and other materials relating to the contemplated license should be directed to Thomas E. O'Toole, Deputy Director, Technology Transfer Office, Centers for Disease Control and Prevention (CDC), 1600 Clifton Road, NE, Mailstop E–67, Atlanta, GA 30333, telephone: (404) 639–6270; facsimile: (404) 639–6266. Applications for a license filed in response to this notice will be treated as objections to the grant of the contemplated license. Only written comments and/or applications for a license which are received by CDC within sixty days of this notice will be considered. Comments and objections submitted in response to this notice will not be made available for public inspection, and, to the extent permitted by law, will not be released under the Freedom of Information Act, 5 U.S.C. 552. A signed Confidential Disclosure Agreement will be required to receive a copy of any pending patent application.

Dated: May 10, 1999.

Joseph R. Carter,

Acting Associate Director for Management and Operations, Centers for Disease Control and Prevention (CDC).

[FR Doc. 99–12206 Filed 5–13–99; 8:45 am]

BILLING CODE 4163–18–P

DEPARTMENT OF HEALTH AND HUMAN SERVICES

Food and Drug Administration

[Docket No. 97D–0389]

Final Guidance on FDA Approval of New Animal Drugs for Minor Uses and for Minor Species; Availability

AGENCY: Food and Drug Administration, HHS.

ACTION: Notice.

SUMMARY: The Food and Drug Administration (FDA) is announcing the availability of a final guidance document entitled ''Guidance for Industry: FDA Approval of New Animal Drugs for Minor Uses and for Minor Species.'' This guidance document is intended to provide specific guidance on the means for generating effectiveness and safety data to support the approval of new animal drugs for minor uses and minor species.

DATES: Written comments may be provided at any time.

ADDRESSES: Submit written requests for single copies of the guidance document entitled ''Guidance for Industry: FDA Approval of New Animal Drugs for Minor Uses and for Minor Species'' to the Communications Staff (HFV–12), Center for Veterinary Medicine (CVM), Food and Drug Administration, 7500 Standish Pl., Rockville, MD 20855. Send one self-addressed adhesive label to assist that office in processing your request. Copies of this guidance document may also be obtained from the CVM home page at ''http://www.fda.gov/cvm''. Submit written comments on the guidance document to the Policy and Regulations Team (HFV–6), Center for Veterinary Medicine, Food and Drug Administration, 7500 Standish Pl., Rockville, MD 20855.

FOR FURTHER INFORMATION CONTACT: Margaret R. Oeller, Center for Veterinary Medicine (HFV–130), Food and Drug Administration, 7500 Standish Pl., Rockville, MD 20855, 301–827–7581, e-mail: moeller@bangate.fda.gov.

SUPPLEMENTARY INFORMATION: The major purpose of this guidance document is to suggest means of generating effectiveness and safety data to support the approval of minor use new animal drugs. Minor use of a new animal drug is defined as use in a minor species or use in any animal species for a condition that is rare or that occurs in limited geographic areas. Minor species are defined by exclusion, as any species other than major species. Major species are defined as cattle, swine, chickens, turkeys, horses, dogs, and cats. According to current regulations, sheep are a minor species except with respect to human food safety data collection requirements, for which sheep are considered major species.

The guidance document, as applied to minor use new animal drugs, does not lessen the legal requirements for demonstrating the safety and effectiveness of a new animal drug. Instead, the guidance document suggests possible means of generating safety and effectiveness data to satisfy these requirements.

In the **Federal Register** of September 29, 1997 (62 FR 50952), FDA published a notice of availability of a draft guidance on this subject. The notice gave interested persons an opportunity to submit comments by December 29, 1997. Seven comments were received by industry and trade associations. FDA considered these comments and revised the draft guidance document where appropriate.

This guidance document is intended to reflect the current way that animal drugs are approved for minor species and minor uses. The Animal Drug Availability Act of 1996 required CVM to examine the way that these products are approved and to propose means to facilitate such approvals. In the **Federal Register** of October 29, 1998 (63 FR 58056), CVM published a notice of the availability of its report proposing several options to encourage animal drug approvals for minor species and for minor uses. It is very likely that additional policies and programs will be implemented over the next few years to accomplish this goal. Because policies and programs may change, sponsors are encouraged to contact CVM early in project development to determine the most efficient path to approval of their products. If any program and policy changes affect the policies in this guidance, CVM will revise this final guidance.

The final guidance represents the agency's current thinking on the means of generating efficacy and safety data to support approval of new animal drug applications for minor use new animal drugs. It does not create or confer any rights for or on any person and does not operate to bind FDA or the public. An alternative approach may be used if such approach satisfies the requirements of the applicable statute, regulations, or both. As with all of FDA's guidances, the public is encouraged to submit written comments with new data or other new information pertinent to this guidance. CVM will periodically review the comments concerning the document and, when appropriate, amend the guidance.

Dated: May 5, 1999.

William K. Hubbard,

Acting Deputy Commissioner for Policy.

[FR Doc. 99–12179 Filed 5–13–99; 8:45 am]

BILLING CODE 4160–01–F

DEPARTMENT OF HEALTH AND HUMAN SERVICES

Food and Drug Administration

[Docket No. 99D–1089]

Year 2000 (Y2K) Computer Compliance Guide; Guidance for FDA Personnel

AGENCY: Food and Drug Administration

ACTION: Notice.

SUMMARY: The Food and Drug Administration (FDA) is announcing the availability of a new compliance policy guide (CPG) entitled ''Year 2000 (Y2K) Computer Compliance''(section 160–800). This guidance document represents the agency's current thinking on the manufacturing and distribution of domestic and imported products regulated by FDA using computer systems that may not perform properly before, or during, the transition to the year 2000 (Y2K). The text of the CPG is included in this notice. This compliance guidance document is an update to the Compliance Policy Guides Manual (August 1996 edition). It is a new CPG,

and it will be included in the next printing of the Compliance Policy Guides Manual. This CPG is intended for FDA personnel, and it is available electronically to the public.

DATES: Written comments may be submitted at any time.

ADDRESSES: Submit written requests for single copies of CPG section 160–800 entitled ''Year 2000 (Y2K) Computer Compliance'' to the Division of Compliance Policy (HFC–230), Office of Enforcement, Office of Regulatory Affairs, Food and Drug Administration, 5600 Fishers Lane, Rockville, MD 20852. Send two self-addressed adhesive labels to assist that office in processing your requests. Written comments should be identified with the docket number found in brackets in the heading of this notice and should be sent to the Dockets Management Branch (HFA–305), Food and Drug Administration, 5630 Fishers Lane, rm. 1061, Rockville, MD 20852. A copy of the CPG is available on the FDA World Wide Web (WWW) site at ''http://www.fda.gov/ora/compliance—ref/cpg/cpggenl/default.htm''. Scroll down the WWW CPG page to locate section 160–800.

FOR FURTHER INFORMATION CONTACT: Tom M. Chin, Division of Compliance Policy (HFC–230), Office of Enforcement, Office of Regulatory Affairs, Food and Drug Administration, 5600 Fishers Lane, Rockville, MD 20852, 301–827–0410

SUPPLEMENTARY INFORMATION: The Food and Drug Administration (FDA) is announcing the availability of a new CPG (section 160–800) entitled ''Year 2000 (Y2K) Computer Compliance.'' This CPG represents the agency's current thinking on the manufacturing and distribution of domestic and imported products regulated by FDA using computer systems that may not perform properly before or during the transition to the year 2000. The text of the CPG is included in this notice.

This CPG is an update to the Compliance Policy Guides Manual (August 1996 edition). It is a new CPG, and it will be included in the next printing of the Compliance Policy Guides Manual.

This CPG is intended for FDA personnel, and it is available electronically to the public (address above). The CPG does not create or confer any rights for or on any person, and it does not operate to bind FDA or the public. An alternative approach may be used if such approach satisfies the requirements of the applicable statute, regulation, or both. The text of the CPG follows:

Sub Chapter 160—Regulatory

Sec. 160–800 Year 2000 (Y2K) Computer Compliance

(CPG 7153.15)

Introduction:

This compliance guidance document is an update to the Compliance Policy Guides Manual (August 1996 edition). It is a new Compliance Policy Guide (CPG) and will be included in the next printing of the Compliance Policy Guides Manual. The CPG is intended for Food and Drug Administration (FDA) personnel and is available electronically to the public. The CPG does not create or confer any rights for or on any person and does not operate to bind FDA or the public. An alternative approach may be used if such approach satisfies the requirements of the applicable statute, regulation, or both.

Background:

This guidance document represents the agency's current thinking on manufacturing and distribution of domestic and imported products regulated by FDA using computer systems that may not perform properly prior to, or during the transition to the year 2000 (Y2K).

As the millenium approaches, there is concern regarding the impact of Y2K issues on the identity, strength, quality, purity, and potency as well as safety, efficacy, and availability of products regulated by FDA. It is the responsibility of industry to come into Y2K compliance as soon as possible.

The agency has taken steps to ensure that its own computer systems will be ready for the transition to the year 2000. The agency's mission critical computer systems have been checked and Y2K problems have been corrected. Those systems are currently undergoing independent verification and validation by a third party to ensure that they are Y2K compliant.

The statutory provisions of the Federal Food, Drug, and Cosmetic Act (FFDCA) and the Public Health Service Act (PHSA) require the regulated industries to ensure that their products are in compliance with the requirements of the FFDCA, PHSA, and regulations. Further, the statutory provisions and the regulations also contain requirements concerning the equipment, machinery, and systems used in product manufacture and distribution.

Most products regulated by FDA are vulnerable to Y2K computer problems. A manufacturer's failure to properly address a Y2K problem in their automated manufacturing, packaging, labeling or distribution processes could result in products that are adulterated or misbranded within the meaning of the Federal Food, Drug, and Cosmetic Act. In addition, FDA regulated computer automated products such as automated medical devices and FDA regulated computer software products such as blood establishment software could become adulterated or misbranded, if they contain a Y2K error and the manufacturer fails to take adequate corrective or preventive action.

FDA believes that companies should be taking actions to ensure that their equipment, machinery, and systems used in product manufacture, control, storage and distribution are Y2K compliant. Those actions should include appropriate steps necessary to prevent Y2K problems that could affect the identity, strength, quality, purity, and potency as well as safety, effectiveness or reliability in general of any regulated product on the market.

To provide industries with information and guidance on Y2K issues, FDA has been alerting them in direct correspondence, speeches, public appearances, meetings, workshops, and guidance documents. The letters to the industry, guidance documents, other background information and links to Y2K information resources are available at the FDA Internet site. (http://www.fda.gov)

Policy:

This compliance policy guide (CPG) applies to all domestic and imported products regulated by FDA:

I. Industry Responsibility

Firms should pursue timely assessment, conversion, testing and validation of systems to allow sufficient time to identify and correct problems before they have any adverse impact on product quality or product availability. To minimize risks, firms should verify and validate systems that may affect product identity, strength, quality, purity or potency as well as safety, effectiveness or reliability in general. Also, FDA has urged industry to develop contingency plans that address all aspects of the manufacturing, supply and distribution systems to ensure that acceptable production levels are maintained to meet critical public health needs.

It is incumbent upon regulated industry to provide accurate and timely Y2K readiness information to address public concerns. FDA will continue to work with regulated industries to disseminate and exchange information relating to Y2K issues in order to avert Y2K problems before they become public health or regulatory issues.

II. Form FDA 483 Inspectional Observations

An FDA inspectional observation that a firm is not Y2K compliant should not be listed on form FDA 483. However, observations regarding specific process or product deficiencies related to the Y2K problem should be listed on the Form FDA 483.

III. Product Correction or Removal Actions

When an FDA regulated product held for sale or in commercial distribution is relabeled, returned, reprocessed, repaired, or replaced to resolve a problem caused by a Y2K computer error before the problem is manifested, the action will be considered a market withdrawal. (21 CFR 7.3(j))

However, if the correction or removal action is not completed before the adverse effect of the Y2K problem is manifested in a distributed product, the correction or removal action will be considered a recall. (21 CFR Part 7) For example, an action to recover a drug product because of an error in expiration dating can be classified as a recall, if the error is manifested in the actual date printed on the label of a drug in commercial

distribution. On the other hand, an action to replace software to correct a yet-to-be-manifested Y2K error in blood donor deferrals or in radiation dose calculations could be a market withdrawal, if that action is completed for all affected products in commercial distribution prior to the first date impacted by the Y2K failure.

For medical devices, if on or after May 18, 1998, (62 FR 27191 May 19, 1997) a manufacturer or importer initiates a correction or removal of medical devices to address a Y2K problem and that action is undertaken to reduce a risk to health, then the firm must report their action to FDA in accordance with the Corrections and Removals Regulation (21 CFR Part 806), regardless of whether or not there has been a malfunction related Y2K.

IV. Enforcement Discretion

The agency may exercise enforcement discretion and take into consideration any unusual or extenuating circumstance(s) that may have a bearing on a decision regarding enforcement action.

Regulatory Action Guidance:

I. Where regulated establishments and products are not compliant with laws and regulations administered by FDA because of Y2K computer issues, decisions on whether or not to pursue regulatory action should be based on an agency assessment of several factors including the following:

A. Products

1. Evaluate whether there is an existing or a potential risk to the public health (for example, specific patient populations or disease conditions) and the impact on product quality, intended purpose, function and/or use of the product. If it is a critical use or critical need product, assess its continued availability and whether there is/are the same or suitable substitute product(s) available to meet the anticipated need; and

2. Evaluate the firm's efforts to develop and initiate a Y2K contingency plan, implement suitable and timely risk assessment, prevention, and correction efforts, including efforts to inform potential users, re-label, return, reprocess, repair, or replace the product identified as Y2K non-compliant.

B. Establishments

In addition to the two items above (A1 and A2), where regulated establishments market violative products resulting from Y2K computer problems, determine responsibility to identify and correct Y2K problems prior to marketing the violative products.

II. District offices should consult with the respective center program monitor(s) (where appropriate) and/or center compliance officer(s) prior to recommending regulatory actions. District offices should obtain concurrence of the respective center program monitor(s) (where appropriate) and/or center compliance office(s) before issuing a warning letter regarding a Y2K computer problem.

Regulatory action with respect to product or process deficiencies caused by a Y2K computer problem must be based on applicable regulations and statutes. Therefore, regulatory citations should reference such regulations.

Dated: May 4, 1999.

Gary Dykstra,

Deputy Associate Commissioner for Regulatory Affairs.

[FR Doc. 99–12178 Filed 5-13-99; 8:45 am]

BILLING CODE 4160–01–F

DEPARTMENT OF HEALTH AND HUMAN SERVICES

Health Care Financing Administration

[HCFA–1072–N]

Medicare Program; June 14, 1999, Meeting of the Practicing Physicians Advisory Council

AGENCY: Health Care Financing Administration (HCFA), HHS.

ACTION: Notice of meeting.

SUMMARY: In accordance with section 10(a) of the Federal Advisory Committee Act, this notice announces a meeting of the Practicing Physicians Advisory Council. This meeting is open to the public.

DATES: The meeting is scheduled for June 14, 1999, from 8:30 a.m. until 5 p.m., e.s.t.

ADDRESSES: The meeting will be held in the Multipurpose Room/Auditorium, 1st Floor, Health Care Financing Administration Building, 7500 Security Boulevard, Baltimore, Maryland 21244.

FOR FURTHER INFORMATION CONTACT: Aron Primack, M.D., M.A., F.A.C.P., Executive Director, Practicing Physicians Advisory Council, Room 435–H, Hubert H. Humphrey Building, 200 Independence Avenue, SW., Washington, D.C. 20201, (202) 690–7874. News media representatives should contact the HCFA Press Office, (202) 690–6145.

SUPPLEMENTARY INFORMATION: The Secretary of the Department of Health and Human Services (the Secretary) is mandated by section 1868 of the Social Security Act to appoint a Practicing Physicians Advisory Council (the Council) based on nominations submitted by medical organizations representing physicians. The Council meets quarterly to discuss certain proposed changes in regulations and carrier manual instructions related to physicians' services, as identified by the Secretary. To the extent feasible and consistent with statutory deadlines, the consultation must occur before publication of the proposed changes. The Council submits an annual report on its recommendations to the Secretary and the Administrator of the Health Care Financing Administration not later than December 31 of each year.

The Council consists of 15 physicians, each of whom has submitted at least 250 claims for physicians' services under Medicare or Medicaid in the previous year. Members of the Council include both participating and nonparticipating physicians, and physicians practicing in rural and underserved urban areas. At least 11 members must be doctors of medicine or osteopathy authorized to practice medicine and surgery by the States in which they practice. Members have been invited to serve for overlapping 4-year terms. In accordance with section 14 of the Federal Advisory Committee Act, terms of more than 2 years are contingent upon the renewal of the Council by appropriate action before the end of the 2-year term.

The Council held its first meeting on May 11, 1992.

The current members are—Jerold M. Aronson, M.D.; Richard Bronfman, D.P.M.; Wayne R. Carlsen, D.O.; Mary T. Herald, M.D.; Sandral Hullett, M.D.; Stephen A. Imbeau, M.D.; Jerilynn S. Kaibel, D.C.; Marie G. Kuffner, M.D.; Derrick K. Latos, M.D.; Dale Lervick, O.D.; Sandra B. Reed, M.D.; Susan Schooley, M.D.; Maisie Tam, M.D.; Victor Vela, M.D.; and Kenneth M. Viste, Jr., M.D. The Council chairperson is Marie G. Kuffner, M.D.

Council members will be updated on the following subjects—The acquisition of Provider Identification Numbers; Quality Improvement Activities as they relate to the Peer Review Organization Sixth Scope of Work; Managed Care Provider Protections under Medicare+Choice; Negotiated Rulemaking for Laboratories, and items and recommendations made at previous meetings.

The agenda will provide for discussion and comment on the following topics:

- Doctors' Readiness for Y2K.
  (How can HCFA reach and encourage practicing physicians to test their systems and equipment to be sure of their Y2K readiness?)
- HCFA's New Coverage Process.
- Requirements for Lead Screening.

Individual physicians or medical organizations that represent physicians that wish to make 5-minute oral presentations on the agenda issues should contact the Executive Director by 12 noon, May 21, 1999, to be scheduled. The number of oral presentations may be limited by the time available. A written copy of the presenter's oral remarks should be submitted to the Executive Director no later than 12 noon, May 28, 1999, for distribution to Council members for review prior to the meeting. Physicians and organizations not scheduled to speak may also submit

written comments to the Executive Director and Council members. The meeting is open to the public, but attendance is limited to the space available.

(Section 1868 of the Social Security Act (42 U.S.C. 1395ee) and section 10(a) of Public Law 92–463 (5 U.S.C. App. 2, section 10(a)); 45 C.F.R. Part 11)

(Catalog of Federal Domestic Assistance Program No. 93.773, Medicare—Hospital Insurance; and Program No. 93.774, Medicare—Supplementary Medical Insurance Program)

Dated: May 10, 1999.

Nancy-Ann Min DeParle,

Administrator, Health Care Financing Administration.

[FR Doc. 99–12235 Filed 5–13–99; 8:45 am]

BILLING CODE 4120–01–U

DEPARTMENT OF THE INTERIOR

Bureau of Indian Affairs

DEPARTMENT OF HEALTH AND HUMAN SERVICES

Indian Health Service

Renewal of Agency Information Collection for Indian Self-Determination and Education Assistance Contracts

AGENCIES: Bureau of Indian Affairs, Department of the Interior, and Indian Health Service, Department of Health and Human Services.

ACTION: Notice of request for comments.

SUMMARY: The Department of the Interior (DOI) and the Department of Health and Human Services (DHHS) announce a request for comments concerning renewal of 1076–0136, the Information Collection Request used for Indian Self-Determination and Education Assistance actions. The information collection will be used to process contracts, grants or cooperative agreements for award by the Bureau of Indian Affairs (Bureau) and the Indian Health Service (IHS) as authorized by the Indian Self-Determination and Education Assistance Act as amended and set forth in 25 CFR part 900. DOI and DHHS invite comment on the information collection described below.

DATES: Interested persons are invited to submit comments on or before July 13, 1999.

ADDRESSES: If you wish to comment, you may submit your comments to James Thomas, Office of Tribal Services, Bureau of Indian Affairs, Department of the Interior, 1849 C Street NW, MS 4603 MIB, Washington, DC 20240. You may telefax comments on this information collection to (202) 208–5113. You may also hand deliver written comments or view comments at the same address. You may obtain a copy of this information collection document at no charge by a written request to the same address, telefaxing a request to the above number, or by calling (202) 208–5727. Please identify the information collection by the number 1076–0136.

FOR FURTHER INFORMATION CONTACT: James Thomas, (202) 208–5727.

SUPPLEMENTARY INFORMATION: DOI and DHHS developed a joint rule, 25 CFR part 900, to implement section 107 of the Indian Self-Determination and Education Assistance Act, as amended, and Title I, Public Law 103–413, the Indian Self-Determination Contract Reform Act of 1994. Section 107(a)(2)(A)(ii) of the Indian Self-Determination Contract Reform Act requires the joint rule to permit contracts and grants be awarded to Indian tribes without the unnecessary burden or confusion associated with two sets of rules and information collection requirements when there is a single program legislation involved. The Bureau expects that the base burden hours established for this Information Collection Request, OMB 1076–0136, will be substantially reduced during the renewal process. The reduction in the number of base burden hours established for information collection requirements of 25 CFR part 900 is a result of three following factors:

(1) More tribes are contracting under 25 CFR 900.8 which permits tribes to contract several programs under a single contract;

(2) The number of self-governance tribes has increased. Self-governance tribes may combine all programs under a single self-governance compact;

(3) A moratorium on new and expanded self-determination contracting for FY 1999, which is expected to carry over into FY 2000, has prevented the tribes from requesting new contracts which have a higher burden than the recontracting proposals.

The information requirements for this joint rule represent significant differences from other agencies in several respects. Both the Bureau and IHS let contracts for multiple programs whereas other agencies usually award single grants to tribes. Under the Indian Self-Determination and Education Assistance Act, as amended, and the Indian Self-Determination Contract Reform Act of 1994, tribes are entitled to contract and may renew contracts annually where other agencies provide grants on a discretionary/competitive basis.

The proposal and other supporting documentation identified in this information collection is used by the DOI and DHHS to determine applicant eligibility, evaluate applicant capabilities, protect the service population, safeguard Federal funds and other resources, and permit the Federal agencies to administer and evaluate contract programs. Tribal governments or tribal organizations provide the information by submitting Public Law 93–638 contract or grant proposals to the appropriate Federal agency. No third party notification or public disclosure burden is associated with this collection.

Request for Comments

DOI and DHHS request comments on this information collection particularly concerning:

(1) the necessity of the information collection for the proper performance of the agencies' functions;

(2) whether this information collection duplicates a collection elsewhere by the federal government;

(3) whether the burden estimate is accurate or could be reduced using technology available to all respondents;

(4) if the quality of the information requested ensures its usefulness to the agency(ies);

(5) if the instructions are clear and easily understood, leading to the least burden on the respondents.

Burden Statement

Each respondent is required to respond from 1 to 12 times per year, depending upon the number of programs they contract from the Bureau and IHS. In addition, each Subpart concerns different parts of the contracting process. For example, Subpart C relates to provisions of initial contract proposal contents. The burden associated with this would not be used when contracts are renewed. Subpart F describes minimum standards for the management systems used by Indian tribes or tribal organizations under these contracts. Subpart G addresses the negotiability of all reporting and data requirements in the contract.

Total annual burden: 299,552 hours.

Total number of respondents: 620.

Total number of responses: 6,880.

Dated: May 10, 1999.

Kevin Gover,

Assistant Secretary—Indian Affairs, Department of the Interior.

Dated: May 10, 1999.

Michel E. Lincoln,

Acting Director, Indian Health Service, Department of Health and Human Services.

[FR Doc. 99–12176 Filed 5–13–99; 8:45 am]

BILLING CODE 4310–02–P

DEPARTMENT OF HOUSING AND URBAN DEVELOPMENT

[Docket No. FR–4444–N–05]

Notice of Proposed Information Collection: Effects of Disclosure on Public Awareness of Lead Paint Hazards

AGENCY: Office of Lead Hazard Control, HUD.

ACTION: Notice.

SUMMARY: The prosed information collection requirement described below will be submitted to the Office of Management and Budget (OMB) for review, as required by the Paperwork Reduction Act. The Department is soliciting public comments on the subject proposal.

DATES: *Comments Due Date:* July 13, 1999.

ADDRESSES: Interested persons are invited to submit comments regarding this proposal. Comments should refer to the proposal by name and/or OMB Control Number and should be sent to: Gail Ward, Reports Liaison Officer, Department of Housing and Urban Development, 451 7th Street, SW, Room P3206, Washington, DC 20410.

FOR FURTHER INFORMATION CONTACT: Barbara A. Haley, (202) 755–1785 ext. 126 (this is not toll-free number), for copies of the proposed data collection instruments.

SUPPLEMENTARY INFORMATION: The Department will submit the proposed information collection to OMB for review, as required by the Paperwork Reduction Act of 1995 (44 U.S.C. Chapter 35, as amended).

The Notice is soliciting comments from members of the public and affected agencies concerning the proposed collection of information to: (1) Evaluate whether the proposed collection of information is necessary for the proper performance of the functions of the agency, including whether the information will have practical utility; (2) Evaluate the accuracy of the agency's estimate of the burden of the proposed collection of information; (3) Enhance the quality, utility, and clarity of the information to be collected; and (4) Minimize the burden of the collection of information on those who are to respond; including through the use of appropriate automated collection techniques or other forms of information technology, e.g., permitting electronic submission of responses.

This Notice also lists the following information:

Title of Proposal: Current Population Survey (CPS) December 1999 Supplement: Effects of Disclosure on Public Awareness of Lead Paint Hazards.

OMB Control Number: 2539–0006.

Need For the Information and Proposed Use: The Department of Housing and Urban Development is requesting renewal of clearance for the collection of data concerning the Lead Paint Hazards Awareness Supplement to be conducted in conjunction with the December 1999 CPS. Title 13, United States Code, Section 182; and Title 29 United States Code, Sections 1–9, authorize the collection of CPS information. The Census Bureau will collect the supplemental data in compliance with the Privacy Act of 1974 and OMB Circular A–130. The Department of Housing and Urban Development (HUD) sponsored the supplement questions, which were previously collected in December 1997. This survey provides information that is suitable for the planning and evaluation of Title X of the Housing and Community Development Act of 1992. The supplement, which was conducted in December 1994 will serve as a benchmark for determining awareness to the hazards of lead-based paint before the disclosure requirement of Title X, which went into effect in December 1996. The disclosure requirement mandates that landlords and sellers of dwellings built before 1978 disclose to potential renters or buyers the potential for the presence of lead-based paint and the hazards associated with lead-based paint. The 1999 supplement will be used to measure the change in awareness for the hazards associated with lead-based paint since the disclosure requirement went into effect and assist state and local governments with lead hazard awareness education program development. The lead paint hazards awareness information will be collected by both personal visit and telephone interviews in conjunction with the regular December CPS interviewing. All interviews are conducted using computer-assisted interviewing.

Agency Form Numbers: There are no forms. All interviewing is computerized.

Members of Affected Public: Households.

Total Burden Estimate (first year):

Estimated Number of Respondents: 48,000 per month.

Estimated Time Per Response: 8.3 minutes.

Frequency of Response: Once—December 1999.

Estimated Total Annual Burden Hours: 6,640.

Estimated Total Annual Cost: $441,172.

Status of the Proposed Information Collection: Revision of a currently approved collection.

Authority: Section 3506 of the Paperwork Reduction Act of 1995, 44 U.S.C. Chapter 35, as amended.

Dated: May 6, 1999.

David E. Jacobs,

Director, Office of Lead Hazard Control.

[FR Doc. 99–12223 Filed 5–13–99; 8:45 am]

BILLING CODE 4210–32–M

DEPARTMENT OF HOUSING AND URBAN DEVELOPMENT

[Docket No. FR–4444–N–06]

Notice of Proposed Information Collection: Guidance for Analysis of Composite Wipe Samples

AGENCY: Office of Lead Hazard Control, HUD.

ACTION: Notice.

SUMMARY: The proposed information collection requirement described below will be submitted to the Office of Management and Budget (OMB) for review, as required by the Paperwork Reduction Act. The Department is soliciting public comments on the subject proposal.

DATES: *Comments Due Date:* July 13, 1999.

ADDRESSES: Interested persons are invited to submit comments regarding this proposal. Comments should refer to the proposal by name and/or OMB Control Number and should be sent to: Gail N. Ward, Reports Liaison Officer, Department of Housing and Urban Development, 451 7th Street, SW, Room P3206, Washington, DC 20410.

FOR FURTHER INFORMATION CONTACT: Dr. Warren Friedman, 202–755–1785 ext. 159 (this is not a toll-free number) for available documents regarding this proposal.

SUPPLEMENTARY INFORMATION: The Department is submitting the proposed information collection to OMB for review, as required by the Paperwork Reduction Act of 1995 (44 U.S.C. Chapter 35, as amended).

This Notice is soliciting comments from members of the public and affecting agencies concerning the proposed collection of information to: (1) Evaluate whether the proposed collection of information is necessary for the proper performance of the functions of the agency, including whether the information will have practical utility; (2) Evaluate the accuracy of the agency's estimate of the burden of the proposed collection of information; (3) Enhance the quality,

utility, and clarity of the information to be collected; and (5) Minimize the burden of the collection of information on those who are to respond; including through the use of appropriate automated collection techniques or other forms of information technology, e.g., permitting electronic submission of responses.

This Notice also lists the following information:

Title of Proposal: Development of Guidance for Analysis of Composite Wipe Samples.

OMB Control Number: (To be assigned.)

Description of the need for the information and proposed use: The HUD Guidelines for the Evaluation and Control of Lead-Based Paint Hazards in Housing (''Guidelines'') and the Environmental Protection Agency (EPA) work practice standards for conducting lead-based paint activities: target housing and child-occupied facilities (15 U.S.C. 2682(a)(1), 40 CFR 745.227) allow the use of analysis of composite samples (more than one sample analyzed together) of dust on wipes (typically thin cellulose cloths of a few square inches) that are wiped on a specified area of a building component as part of risk assessment. Laboratory experiences has shown that the presence of increased bulk from more than one wipe causes problems during laboratory analysis, particularly digestion (extraction of lead from the wipe). Limited performance testing and anecdotal information from laboratories indicate that the quality of laboratory processing of wipes may be poor due to lack of validated digestion methodology. The accrediting bodies authorized under the National Lead Laboratory Accreditation Program (15 U.S.C. 2685(b)) have recently specified separation of composite wipe samples into separate wipes for laboratory digestion and analysis as a set of single wipe samples, along with reporting of cross-contamination results; this approach has not been validated. Most information collected, such as documentation of laboratory procedures, and reports of laboratory analytical results, will be collected and processed electronically, preferably through electronic mail of computer data files and also through shipping of computer data disks. Laboratories participating in the information collection will be compensated at market rates for performing the wipe sample analyses. Ethnical guidance based on field-validated laboratory processing of composite wipe samples is needed to promote the acquisition of technically acceptable and programmatically accepted laboratory analytical results. The guidance developed as a result of this information collection will be considered for incorporation into HUD documents, such as the Guidelines, offered to voluntary consensus standards bodies for their consideration in adopting voluntary consensus standards, and provided to other public and private entities for their use.

Agency form numbers: Not applicable.

Members of affected public: Laboratories performing analyses of lead in room dust.

Total Burden Estimate:

Number of respondents	Frequency of response	Hours of response
20	2	400

Status of the proposed information collection: New collection.

Authority: The Paperwork Reduction Act of 1995, 44 U.S.C. Chapter 35, as amended.

Dated: May 6, 1999.

David E. Jacobs,

Director, Office of Lead Hazard Control.

[FR Doc. 99–12224 Filed 5–13–99; 8:45 am]

BILLING CODE 4210–32–M

DEPARTMENT OF HOUSING AND URBAN DEVELOPMENT

[Docket No. FR–4316–FA–05]

Announcement of Funding Award—Fiscal Year 1999 Lead-Based Paint Hazard Control National Institute of Building Sciences

AGENCY: Office of the Secretary—Office of Lead Hazard Control, HUD.

ACTION: Announcement of funding award.

SUMMARY: In accordance with section 102(a)(4)(C) of the Department of Housing and Urban Development Reform Act of 1989, this announcement notifies the public of a funding decision made by the Department of the National Institute of Building Sciences (NIBS). This announcement contains the name and address of the awardee and the amount of the award.

FOR FURTHER INFORMATION CONTACT: David Levitt, Department of Housing and Urban Development, 451 Seventh Street, SW, Ro9m P3206, Washington, DC 20410, telephone (202) 755–1785, ext. 156. Hearing- or speech-impaired individuals may access this number by calling the Federal Information Relay Service TTY at 1–800–877–8339.

SUPPLEMENTARY INFORMATION: The fiscal year 1999 appropriation for the Department of Housing and Urban Development established the Healthy Homes Initiative and requested a report on the Department's plan for the initiative. Public Law 105–276 (the Departments of Veterans Affairs and Housing and Urban Development, and Independent Agencies Appropriations Act of 1999) provides $10 million for the initiative to, as described in the Appropriations Committee's report, ''develop and implement a program of research and demonstration projects that would address multiple housing-related problems affecting the health of children'' of which at least $4 million is to be ''devoted to preventive measures to correct moisture and mold problems in inner-city housing occupied by families with infants in communities where toxic mold exposure has been linked to acute pulmonary hemorrhage an infant death.'' The Appropriations Committee requested that HUD submit a plan that ''inventories the problems to be addressed, described their intersections, identifies key technical questions, and provides a spending plan allocation funds among technical and policy studies, pilot projects, and emergency remediation.'' In developing this plan, the Committee advised HUD to seek expert advice. The National Institute of Building Sciences was awarded a grant to organize, facilitate, and record a two day meeting of recognized experts from a broad range of professions, from Federal, State, and local government agencies, and national and local practitioners in the private sector. NIBS is responsible for collecting and collating all comments from meeting participants, facilitating the exchange of ideas and information at the meeting, recording the meeting proceedings, generating a written summary of the meeting along with all supporting materials (e.g. scientific reports, peer reviewed journal articles), and forwarding all materials to the OLHC. In addition, NIBS is responsible for the distribution of the final HHI Plan of Action to all meeting participants.

This notice announces the award of $75,828 to NIBS. This funding will be used by NIBS to accomplish the tasks described above.

The Catalog of Federal Domestic Assistance number for this program is 14.900.

In accordance with section 102(a)(4)(C) of the Department of Housing and Urban Development Reform Act of 1989 (103 Stat. 1987, 42 U.S.C. 3545), the Department is publishing the name, address, and amount of the award as follows: National Institute of Building Sciences,

1090 Vermont Ave., NW, Washington, DC 20005, Amount of Grant: $75,828.00.

Dated: May 5, 1999.

David E. Jacobs,

Director, Office of Lead Hazard Control.

[FR Doc. 99–12222 Filed 5–13–99; 8:45 am]

BILLING CODE 4210–32–M

DEPARTMENT OF HOUSING AND URBAN DEVELOPMENT

[Docket No. FR–4432–N–19]

Federal Property Suitable as Facilities To Assist the Homeless

AGENCY: Office of the Assistant Secretary for Community Planning and Development, HUD.

ACTION: Notice.

SUMMARY: This Notice identifies unutilized, underutilized, excess, and surplus Federal property reviewed by HUD for suitability for possible use to assist the homeless.

FOR FURTHER INFORMATION CONTACT: Mark Johnston, room 7256, Department of Housing and Urban Development, 451 Seventh Street SW, Washington, DC 20410; telephone (202) 708–1226; TTY number for the hearing- and speech-impaired (202) 708–2565 (these telephone numbers are not toll-free), or call the toll-free Title V information line at 1–800–927–7588.

SUPPLEMENTARY INFORMATION: In accordance with 24 CFR part 581 and section 501 of the Stewart B. McKinney Homeless Assistance Act (42 U.S.C. 11411), as amended, HUD is publishing this Notice to identify Federal buildings and other real property that HUD has reviewed for suitability for use to assist the homeless. The properties were reviewed using information provided to HUD by Federal landholding agencies regarding unutilized and underutilized buildings and real property controlled by such agencies or by GSA regarding its inventory of excess or surplus Federal property. This Notice is also published in order to comply with the December 12, 1988 Court Order in *National Coalition for the Homeless* v. *Veterans Administration*, No. 88–2503–OG (D.D.C.).

Properties reviewed are listed in this Notice according to the following categories: Suitable/available, suitable/unavailable, suitable/to be excess, and unsuitable. The properties listed in the three suitable categories have been reviewed by the landholding agencies, and each agency has transmitted to HUD: (1) Its intention to make the property available for use to assist the homeless, (2) its intention to declare the property excess to the agency's needs, or (3) a statement of the reasons that the property cannot be declared excess or made available for use as facilities to assist the homeless.

Properties listed as suitable/available will be available exclusively for homeless use for a period of 60 days from the date of this Notice. Homeless assistance providers interested in any such property should send a written expression of interest to HHS, addressed to Brian Rooney, Division of Property Management, Program Support Center, HHS, room 5B–41, 5600 Fishers Lane, Rockville, MD 20857; (301) 443–2265. (This is not a toll-free number.) HHS will mail to the interested provider an application packet, which will include instructions for completing the application. In order to maximize the opportunity to utilize a suitable property, providers should submit their written expressions of interest as soon as possible. For complete details concerning the processing of applications, the reader is encouraged to refer to the interim rule governing this program, 24 CFR part 581.

For properties listed as suitable/to be excess, that property may, if subsequently accepted as excess by GSA, be made available for use by the homeless in accordance with applicable law, subject to screening for other Federal use. At the appropriate time, HUD will publish the property in a Notice showing it as either suitable/available or suitable/unavailable.

For properties listed as suitable/unavailable, the landholding agency has decided that the property cannot be declared excess or made available for use to assist the homeless, and the property will not be available.

Properties listed as unsuitable will not be made available for any other purpose for 20 days from the date of this Notice. Homeless assistance providers interested in a review by HUD of the determination of unsuitability should call the toll free information line at 1–800–927–7588 for detailed instructions or write a letter to Mark Johnston at the address listed at the beginning of this Notice. Included in the request for review should be the property address (including zip code), the date of publication in the **Federal Register**, the landholding agency, and the property number.

For more information regarding particular properties identified in this Notice (*i.e.*, acreage, floor plan, existing sanitary facilities, exact street address), providers should contact the appropriate landholding agencies at the following addresses: ARMY: Mr. Jeff Holste, U.S. Army Center for Public Works, Installation Support Center, Facilities Management, 7701 Telegraph Road, Alexandria, VA 22315–3862; (703) 428–6318; (These are not toll-free numbers).

Dated: May 6, 1999.

Fred Karnas, Jr.,

Deputy Assistant Secretary for Economic Development.

TITLE V, FEDERAL SURPLUS PROPERTY PROGRAM FEDERAL REGISTER REPORT FOR 5/14/99

Unsuitable Properties

Buildings (by State)

Alabama

Bldg. 3660
Redstone Arsenal
Redstone Arsenal Co: Madison AL 35898–
Landholding Agency: Army
Property Number: 21199920010
Status: Unutilized
Reasons: Secured Area, Extensive deterioration

Bldg. 3780
Redstone Arsenal
Redstone Arsenal Co: Madison AL 35898–
Landholding Agency: Army
Property Number: 21199920011
Status: Unutilized
Reasons: Secured Area, Extensive deterioration

Bldg. 3785
Redstone Arsenal
Redstone Arsenal Co: Madison AL 35898–
Landholding Agency: Army
Property Number: 21199920012
Status: Unutilized
Reasons: Secured Area, Extensive deterioration

Bldg. 3788
Redstone Arsenal
Redstone Arsenal Co: Madison AL 35898–
Landholding Agency: Army
Property Number: 21199920013
Status: Unutilized
Reasons: Secured Area, Extensive deterioration

Bldgs. 5106–5107
Redstone Arsenal
Redstone Arsenal Co: Madison AL 35898–
Landholding Agency: Army
Property Number: 21199920014
Status: Unutilized
Reasons: Secured Area, Extensive deterioration

Bldg. 7863
Redstone Arsenal
Redstone Arsenal Co: Madison AL 35898–
Landholding Agency: Army
Property Number: 21199920015
Status: Unutilized
Reasons: Secured Area, Extensive deterioration

Bldg. 7370
Redstone Arsenal
Redstone Arsenal Co: Madison AL 35898–
Landholding Agency: Army
Property Number: 21199920016
Status: Unutilized
Reasons: Secured Area, Extensive deterioration

Bldgs. 7375, 7376
Redstone Arsenal
Redstone Arsenal Co: Madison AL 35898–
Landholding Agency: Army
Property Number: 21199920017
Status: Unutilized
Reasons: Secured Area, Extensive deterioration

Bldg. 7382
Redstone Arsenal
Redstone Arsenal Co: Madison AL 35898–
Landholding Agency: Army
Property Number: 21199920018
Status: Unutilized
Reasons: Secured Area, Extensive deterioration

Bldgs. 7385–7387
Redstone Arsenal
Redstone Arsenal Co: Madison AL 35898–
Landholding Agency: Army
Property Number: 21199920019
Status: Unutilized
Reasons: Secured Area, Extensive deterioration

5 Bldgs.
Redstone Arsenal
7388, 7527, 7528, 7530, 7531
Redstone Arsenal Co: Madison AL 35898–
Landholding Agency: Army
Property Number: 21199920020
Status: Unutilized
Reasons: Secured Area, Extensive deterioration

Bldgs. 7565–7566
Redstone Arsenal
Redstone Arsenal Co: Madison AL 35898–
Landholding Agency: Army
Property Number: 21199920021
Status: Unutilized
Reasons: Secured Area, Extensive deterioration

Bldgs. 7600, 7604, 7608
Redstone Arsenal
Redstone Arsenal Co: Madison AL 35898–
Landholding Agency: Army
Property Number: 21199920022
Status: Unutilized
Reasons: Secured Area, Extensive deterioration

Bldgs. 7621–7624
Redstone Arsenal
Redstone Arsenal Co: Madison AL 35898–
Landholding Agency: Army
Property Number: 21199920023
Status: Unutilized
Reasons: Secured Area, Extensive deterioration

4 Bldgs.
Redstone Arsenal
7632, 7636, 7637, 7638
Redstone Arsenal Co: Madison AL 35898–
Landholding Agency: Army
Property Number: 21199920024
Status: Unutilized
Reasons: Secured Area, Extensive deterioration

Bldgs. 7643, 7644, 7648
Redstone Arsenal
Redstone Arsenal Co: Madison AL 35898–
Landholding Agency: Army
Property Number: 21199920025
Status: Unutilized
Reasons: Secured Area, Extensive deterioration

Bldg. 7668
Redstone Arsenal
Redstone Arsenal Co: Madison AL 35898–
Landholding Agency: Army
Property Number: 21199920026
Status: Unutilized
Reasons: Secured Area, Extensive deterioration

Bldg. 7717
Redstone Arsenal
Redstone Arsenal Co: Madison AL 35898–
Landholding Agency: Army
Property Number: 21199920027
Status: Unutilized
Reasons: Secured Area, Extensive deterioration

Bldgs. 7723, 7725
Redstone Arsenal
Redstone Arsenal Co: Madison AL 35898–
Landholding Agency: Army
Property Number: 21199920028
Status: Unutilized
Reasons: Secured Area, Extensive deterioration

Bldgs. 8011, 8020
Redstone Arsenal
Redstone Arsenal Co: Madison AL 35898–
Landholding Agency: Army
Property Number: 21199920029
Status: Unutilized
Reasons: Secured Area, Extensive deterioration

Alaska

Bldg. 1050
Fort Wainwright
Ft. Wainwright Co: North Star AK 99703–6505
Landholding Agency: Army
Property Number: 21199920001
Status: Unutilized
Reason: Extensive deterioration

Bldg. 2060
Fort Wainwright
Ft. Wainwright Co: North Star AK 99703–
Landholding Agency: Army
Property Number: 21199920002
Status: Unutilized
Reasons: Within 2000 ft. of flammable or explosive material, Within airport runway clear zone

Bldg. 2063
Fort Wainwright
Ft. Wainwright Co: North Star AK 99703–
Landholding Agency: Army
Property Number: 21199920003
Status: Unutilized
Reason: Within 2000 ft. of flammable or explosive material

Bldg. 3007
Fort Wainwright
Ft. Wainwright Co: North Star AK 99703–
Landholding Agency: Army
Property Number: 21199920004
Status: Unutilized
Reason: Within 2000 ft. of flammable or explosive material

Bldg. 3032
Fort Wainwright
Ft. Wainwright Co: North Star AK 99703–
Landholding Agency: Army
Property Number: 21199920005
Status: Unutilized
Reasons: Extensive deterioration

Bldg. 3200
Fort Wainwright
Ft. Wainwright Co: North Star AK 99703–
Landholding Agency: Army
Property Number: 21199920006
Status: Unutilized
Reasons: Within 2000 ft. of flammable or explosive material, Extensive deterioration

Bldg. 3201
Fort Wainwright
Ft. Wainwright Co: North Star AK 99703–
Landholding Agency: Army
Property Number: 21199920007
Status: Unutilized
Reasons: Within 2000 ft. of flammable or explosive material, Extensive deterioration

Bldg. 3203
Fort Wainwright
Ft. Wainwright Co: North Star AK 99703–
Landholding Agency: Army
Property Number: 21199920008
Status: Unutilized
Reasons: Within 2000 ft. of flammable or explosive material, Extensive deterioration

Bldg. 3204
Fort Wainwright
Ft. Wainwright Co: North Star AK 99703–
Landholding Agency: Army
Property Number: 21199920009
Status: Unutilized
Reasons: Within 2000 ft. of flammable or explosive material, Extensive deterioration

Arizona

Bldg. 2002
Yuma Proving Ground
Yuma Co: AZ 85365–
Landholding Agency: Army
Property Number: 21199920030
Status: Unutilized
Reasons: Extensive deterioration

Bldg. 2103
Yuma Proving Ground
Yuma Co: AZ 85365–
Landholding Agency: Army
Property Number: 21199920031
Status: Unutilized
Reasons: Within 2000 ft. of flammable or explosive material, Secured Area

Bldg. 3500
Yuma Proving Ground
Yuma Co: AZ 85365–
Landholding Agency: Army
Property Number: 21199920032
Status: Unutilized
Reasons: Extensive deterioration

California

Bldg. 576
Sierra Army Depot
Herlong Co: Lassen CA 96113–
Landholding Agency: Army
Property Number: 21199920033
Status: Unutilized
Reasons: Within 2000 ft. of flammable or explosive material, Secured Area

Bldg. 578
Sierra Army Depot
Herlong Co: Lassen CA 96113–
Landholding Agency: Army
Property Number: 21199920034
Status: Unutilized
Reasons: Within 2000 ft. of flammable or explosive material, Secured Area

Bldg. 597
Sierra Army Depot

Herlong Co: Lassen CA 96113–
Landholding Agency: Army
Property Number: 21199920035
Status: Unutilized
Reasons: Within 2000 ft. of flammable or explosive material, Secured Area

Bldg. 598
Sierra Army Depot
Herlong Co: Lassen CA 96113–
Landholding Agency: Army
Property Number: 21199920036
Status: Unutilized
Reasons: Within 2000 ft. of flammable or explosive material, Secured Area

4 Bldgs.
Fort Irwin
813, 415, 543, 445
Ft. Irwin Co: San Bernardino CA 92310–
Landholding Agency: Army
Property Number: 21199920037
Status: Unutilized
Reasons: Secured Area, Extensive deterioration

17 Bldgs.
Fort Irwin
Ft. Irwin Co: San Bernardino CA 92310–
Location: 419, 434, 456, 458, 460, 514, 530, 412, 512, 524, 616, 532, 534, 535, 540, 543, 551
Landholding Agency: Army
Property Number: 21199920038
Status: Unutilized
Reasons: Secured Area, Extensive deterioration

Georgia

Bldg. 33604
Fort Gordon
Ft. Gordon Co: Richmond GA 30905–
Landholding Agency: Army
Property Number: 21199920039
Status: Unutilized
Reason: Extensive deterioration

4 Bldgs.
Fort McPherson
343, 344, 345, 349
Ft. McPherson Co: Fulton GA 30330–
Landholding Agency: Army
Property Number: 21199920040
Status: Unutilized
Reason: Secured Area

6 Bldgs.
Fort McPherson
352, 353, 356–359
Ft. McPherson Co: Fulton GA 30330–
Landholding Agency: Army
Property Number: 21199920041
Status: Unutilized
Reason: Secured Area

Bldgs. 454, 456, 457
Fort McPherson
Ft. McPherson Co: Fulton GA 30330–
Landholding Agency: Army
Property Number: 21199920042
Status: Unutilized
Reason: Secured Area

Bldg. 500
Fort McPherson
Ft. McPherson Co: Fulton GA 30330–
Landholding Agency: Army
Property Number: 21199920043
Status: Unutilized
Reason: Secured Area

Bldgs. 701–702
Fort Gillem
Forest Park Co: Clayton GA 30298–
Landholding Agency: Army
Property Number: 21199920044
Status: Unutilized
Reasons: Secured Area, Extensive deterioration

Bldgs. 704–705
Fort Gillem
Forest Park Co: Clayton GA 30298–
Landholding Agency: Army
Property Number: 21199920045
Status: Unutilized
Reasons: Secured Area, Extensive deterioration

Bldgs. 707–710
Fort Gillem
Forest Park Co: Clayton GA 30298–
Landholding Agency: Army
Property Number: 21199920046
Status: Unutilized
Reasons: Secured Area, Extensive deterioration

Bldgs. 712–713
Fort Gillem
Forest Park Co: Clayton GA 30298–
Landholding Agency: Army
Property Number: 21199920047
Status: Unutilized
Reasons: Secured Area, Extensive deterioration

Bldg. 807
Fort Gillem
Forest Park Co: Clayton GA 30298–
Landholding Agency: Army
Property Number: 21199920048
Status: Unutilized
Reasons: Secured Area, Extensive deterioration

Bldg. 816
Fort Gillem
Forest Park Co: Clayton GA 30298–
Landholding Agency: Army
Property Number: 21199920049
Status: Unutilized
Reasons: Secured Area, Extensive deterioration

Bldg. 841
Fort Gillem
Forest Park Co: Clayton GA 30298–
Landholding Agency: Army
Property Number: 21199920050
Status: Unutilized
Reasons: Secured Area, Extensive deterioration

Bldg. 935
Fort Gillem
Forest Park Co: Clayton GA 30298–
Landholding Agency: Army
Property Number: 21199920051
Status: Unutilized
Reasons: Secured Area, Extensive deterioration

Hawaii

Bldg. T–6015
Schofield Barracks
Wahiawa Co: HI 96786–
Landholding Agency: Army
Property Number: 21199920052
Status: Unutilized
Reason: Extensive deterioration

Bldg. T–6019
Schofield Barracks
Wahiawa Co: HI 96786–
Landholding Agency: Army
Property Number: 21199920053
Status: Unutilized
Reason: Extensive deterioration

Illinois

Bldg. HP 120
Sheridan Reserve Complex
Sheridan Co: IL 60037–
Landholding Agency: Army
Property Number: 21199920054
Status: Unutilized
Reason: Extensive deterioration

Bldg. HP 122
Sheridan Reserve Complex
Sheridan Co: IL 60037–
Landholding Agency: Army
Property Number: 2119920055
Status: Unutilized
Reason: Extensive deterioration

Bldg. HP 143
Sheridan Army Reserve Complex
Sheridan Co: IL 60037–
Landholding Agency: Army
Property Number: 21199920056
Status: Unutilized
Reason: Extensive deterioration

Bldg. HP 144
Sheridan Army Reserve Complex
Sheridan Co: IL 60037–
Landholding Agency: Army
Property Number: 21199920057
Status: Unutilized
Reason: Extensive deterioration

Bldg. HP 145
Sheridan Reserve Complex
Sheridan Co. IL 60037–
Landholding Agency: Army
Property Number: 21199920058
Status: Unutilized
Reason: Extensive deterioration

Bldg. HP 146
Sheridan Reserve Complex
Sheridan Co: IL 60037–
Landholding Agency: Army
Property Number: 21199920059
Status: Unutilized
Reason: Extensive deterioration

Bldg. HP 382
Sheridan Reserve Complex
Sheridan Co: IL 60037–
Landholding Agency: Army
Property Number: 21199920060
Status: Unutilized
Reason: Extensive deterioration

Bldg. HP 383
Sheridan Reserve Complex
Sheridan Co: IL 60037–
Landholding Agency: Army
Property Number: 21199920061
Status: Unutilized
Reason: Extensive deterioration

Bldg. HP 415
Sheridan Reserve Complex
Sheridan Co: IL 60037–
Landholding Agency: Army
Property Number: 21199920062
Status: Unutilized
Reason: Extensive deterioration

Indiana

Bldg. 121C
Newport Chemical Depot
Newport Co: Vermillion IN 47966–
Landholding Agency: Army
Property Number: 21199920063

Status: Unutilized
Reasons: Secured Area, Extensive deterioration

Kansas

Bldg. T–994
Fort Leavenworth
Leavenworth Co: KS 66027–
Landholding Agency: Army
Property Number: 21199920064
Status: Unutilized
Reason: Extensive deterioration

Kentucky

Bldg. 05711
Fort Campbell
Ft. Campbell Co: Christian KY 42223–
Landholding Agency: Army
Property Number: 21199920065
Status: Unutilized
Reason: Extensive deterioration

Bldg. 00769
Fort Campbell
Ft. Campbell Co: Christian KY 42223–
Landholding Agency: Army
Property Number: 21199920066
Status: Unutilized
Reason: Extensive deterioration

Louisiana

Bldgs. 307–311
Fort Polk
Ft. Polk Co: Vernon Parish LA 71459–
Landholding Agency: Army
Property Number: 21199920067
Status: Unutilized
Reason: Floodway

Bldgs. 909–910
Fort Polk
Ft. Polk Co: Vernon Parish LA 71459–
Landholding Agency: Army
Property Number: 21199920068
Status: Unutilized
Reason: Floodway

Bldg. 1021
Fort Polk
Ft. Polk Co: Vernon Parish LA 71459–
Landholding Agency: Army
Property Number: 21199920069
Status: Unutilized
Reason: Floodway

Bldg. 1516
Fort Polk
Ft. Polk Co: Vernon Parish LA 71459–
Landholding Agency: Army
Property Number: 21199920070
Status: Unutilized
Reason: Floodway

Bldg. 2509
Fort Polk
Ft. Polk Co: Vernon Parish LA 71459–
Landholding Agency: Army
Property Number: 21199920071
Status: Unutilized
Reason: Floodway

Bldg. 7121
Fort Polk
Ft. Polk Co: Vernon Parish LA 71459–
Landholding Agency: Army
Property Number: 21199920072
Status: Unutilized
Reason: Floodway

Bldgs. 7182–7185
Fort Polk
Ft Polk Co: Vernon Parish LA 71459–
Landholding Agency: Army
Property Number: 21199920073
Status: Unutilized
Reason: Floodway

Bldg. 7211
Fort Polk
Ft Polk Co: Vernon Parish LA 71459–
Landholding Agency: Army
Property Number: 21199920074
Status: Unutilized
Reason: Floodway

Bldg. 7601
Fort Polk
Ft Polk Co: Vernon Parish LA 71459–
Landholding Agency: Army
Property Number: 21199920075
Status: Unutilized
Reason: Floodway

Bldg. 7838
Fort Polk
Ft Polk Co: Vernon Parish LA 71459–
Landholding Agency: Army
Property Number: 21199920076
Status: Unutilized
Reason: Floodway

Bldg. 8027
Fort Polk
Ft Polk Co: Vernon Parish LA 71459–
Landholding Agency: Army
Property Number: 21199920077
Status: Unutilized
Reason: Floodway

Bldg. 8071
Fort Polk
Ft Polk Co: Vernon Parish LA 71459–
Landholding Agency: Army
Property Number: 21199920078
Status: Unutilized
Reason: Floodway

Bldg. 8082
Fort Polk
Ft. Polk Co: Vernon Parish LA 71459–
Landholding Agency: Army
Property Number: 21199920079
Status: Unutilized
Reason: Floodway

Bldg. 8544
Fort Polk
Ft. Polk Co: Vernon Parish LA 71459–
Landholding Agency: Army
Property Number: 21199920080
Status: Unutilized
Reason: Floodway

Maryland

Bldg. 01088
Aberdeen Proving Ground
Aberdeen Co: Harford MD 21005–
Landholding Agency: Army
Property Number: 21199920081
Status: Unutilized
Reason: Secured Area

Missouri

Bldg. 3A
Lake City Army Ammunition Plant
Independence Co: Jackson MO 64050–
Landholding Agency: Army
Property Number: 21199920082
Status: Unutilized
Reasons: Within 2000 ft. of flammable or explosive material, Secured Area

New York

Bldg. T–2222
Fort Drum
Ft. Drum Co: Jefferson NY 13602–
Landholding Agency: Army
Property Number: 21199920083
Status: Unutilized
Reason: Extensive deterioration

Oregon

8 Bldgs.
Umatilla Chemical Depot
Hermiston Co: OR 97838–
Location: 101–103, 108, 114, 119, 120, 121, 124–126
Landholding Agency: Army
Property Number: 21199920084
Status: Unutilized
Reason: Secured Area

Bldg. 105
Umatilla Chemical Depot
Hermiston Co: OR 97838–
Landholding Agency: Army
Property Number: 21199920085
Status: Unutilized
Reason: Secured Area

Bldgs. 106–107
Umatilla Chemical Depot
Hermiston Co: OR 97838–
Landholding Agency: Army
Property Number: 21199920086
Status: Unutilized
Reason: Secured Area

Bldgs. 109–113
Umatilla Chemical Depot
Hermiston Co: OR 97838–
Landholding Agency: Army
Property Number: 21199920087
Status: Unutilized
Reason: Secured Area

Bldgs. 117–118
Umatilla Chemical Depot
Hermiston Co: OR 97838–
Landholding Agency: Army
Property Number: 21199920088
Status: Unutilized
Reason: Secured Area

Bldg. 129
Umatilla Chemical Depot
Hermiston Co: OR 97838–
Landholding Agency: Army
Property Number: 21199920089
Status: Unutilized
Reason: Secured Area

Bldgs. 130–131
Umatilla Chemical Depot
Hermiston Co: OR 97838–
Landholding Agency: Army
Property Number: 21199920090
Status: Unutilized
Reason: Secured Area

Utah

Bldgs. 111, 145, 156, 157
Dugway Proving Ground
Dugway Co: Tooele UT 84022–
Landholding Agency: Army
Property Number: 21199920091
Status: Unutilized
Reasons: Secured Area, Extensive deterioration

Bldgs. 140, 165
Dugway Proving Ground
Dugway Co: Tooele UT 84022–
Landholding Agency: Army
Property Number: 21199920092
Status: Unutilized

Reasons: Secured Area, Extensive deterioration

Bldg. 248
Dugway Proving Ground
Dugway Co: Tooele UT 84022–
Landholding Agency: Army
Property Number: 21199920093
Status: Unutilized
Reasons: Secured Area, Extensive deterioration

Bldg. 306
Dugway Proving Ground
Dugway Co: Tooele UT 84022–
Landholding Agency: Army
Property Number: 21199920094
Status: Unutilized
Reasons: Secured Area, Extensive deterioration

Bldgs. 71, 313
Dugway Proving Ground
Dugway Co: Tooele UT 84022–
Landholding Agency: Army
Property Number: 21199920095
Status: Unutilized
Reasons: Secured Area, Extensive deterioration

Bldgs. 3312, 3314
Dugway Proving Ground
Dugway Co: Tooele UT 84022–
Landholding Agency: Army
Property Number: 21199920096
Status: Unutilized
Reasons: Within 2000 ft. of flammable or explosive material, Secured Area

11 Bldg.
Dugway Proving Ground
Dugway Co: Tooele UT 84022–
Location: 3019, 3022, 3028, 3119, 3120, 3218, 3222, 3228, 3316, 3318, 3328
Landholding Agency: Army
Property Number: 21199920097
Status: Unutilized
Reasons: Within 2000 ft. of flammable or explosive material, Secured Area

Bldg. 4217
Dugway Proving Ground
Dugway Co: Tooele UT 84022–
Landholding Agency: Army
Property Number: 21199920098
Status: Unutilized
Reasons: Secured Area

Bldgs. 5360–5392
Dugway Proving Ground
Dugway Co: Tooele UT 84022–
Landholding Agency: Army
Property Number: 21199920099
Status: Unutilized
Reasons: Secured Area

Bldg. 5714
Dugway Proving Ground
Dugway Co: Tooele UT 84022–
Landholding Agency: Army
Property Number: 21199920100
Status: Unutilized
Reasons: Secured Area

Bldg. 5716
Dugway Proving Ground
Dugway Co: Tooele UT 84022–
Landholding Agency: Army
Property Number: 21199920101
Status: Unutilized
Reasons: Secured Area

Virginia

Bldg. 96
Fort Belvoir
Ft. Belvoir: VA 22060–
Landholding Agency: Army
Property Number: 21199920102
Status: Unutilized
Reasons: Extensive deterioration

Bldg. 98
Fort Belvoir
Ft. Belvoir Co: VA 22060–
Landholding Agency: Army
Property Number: 21199920103
Status: Unutilized
Reason: Extensive deterioration

Bldg. 354
Fort Belvoir
Ft. Belvoir Co: VA 22060–
Landholding Agency: Army
Property Number: 21199920104
Status: Unutilized
Reason: Extensive deterioration

Bldg. 378
Fort Belvoir
Ft. Belvoir Co: VA 22060–
Landholding Agency: Army
Property Number: 21199920105
Status: Unutilized
Reason: Extensive deterioration

Bldg. 394
Fort Belvoir
Ft. Belvoir Co: VA 22060–
Landholding Agency: Army
Property Number: 21199920106
Status: Unutilized
Reason: Extensive deterioration

Bldg. 1475
Fort Belvoir
Ft. Belvoir Co: VA 22060–
Landholding Agency: Army
Property Number: 21199920107
Status: Unutilized
Reason: Extensive deterioration

Bldg. 1481
Fort Belvoir
Ft. Belvoir Co: VA 22060–
Landholding Agency: Army
Property Number: 21199920108
Status: Unutilized
Reason: Extensive deterioration

Bld. 1485
Fort Belvoir
Ft. Belvoir Co: VA 22060–
Landholding Agency: Army
Property Number: 21199920109
Status: Unutilized
Reason: Extensive deterioration

Bldgs. 1486–1487
Fort Belvoir
Ft. Belvoir Co: VA 22060–
Landholding Agency: Army
Property Number: 21199920110
Status: Unutilized
Reason: Extensive deterioration

Bldg. 7373
Fort Belvoir
Ft. Belvoir Co: VA 22060–
Landholding Agency: Army
Property Number: 21199920111
Status: Unutilized
Reason: Extensive deterioration

Bldg. 7386
Fort Belvoir
Ft. Belvoir Co: VA 22060–
Landholding Agency: Army
Property Number: 21199920112
Status: Unutilized
Reason: Extensive deterioration

Bldgs. TT0128, T00937, TT1504
Fort A.P. Hill
Bowling Green Co: Caroline VA 22427–
Landholding Agency: Army
Property Number: 21199920113
Status: Unutilized
Reason: Extensive deterioration

Bldg. TT0227
Fort A.P. Hill
Bowling Green Co: Caroline VA 22427–
Landholding Agency: Army
Property Number: 21199920114
Status: Unutilized
Reason: Extensive deterioration

Bldgs. TT1232, TT1233, TT1234
Fort A.P. Hill
Bowling Green Co: Caroline VA 22427–
Landholding Agency: Army
Property Number: 21199920115
Status: Unutilized
Reason: Extensive deterioration

5 Bldgs.
Fort A.P. Hill
TT0121, TT0122, TT0512, TT1227, TT0136
Bowling Green Co: Caroline VA 22427–
Landholding Agency: Army
Property Number: 21199920116
Status: Unutilized
Reason: Extensive deterioration

Bldg. T–1117
Fort Lee
Ft. Lee Co: Prince George VA 23801–
Landholding Agency: Army
Property Number: 21199920117
Status: Unutilized
Reason: Extensive deterioration

Bldg. T–6235C
Fort Lee
Ft. Lee Co: Prince George VA 23801–
Landholding Agency: Army
Property Number: 21199920118
Status: Unutilized
Reason: Extensive deterioration

Washington

Bldg. 575
Fort Lawton
Seattle Co: King WA 98199–
Landholding Agency: Army
Property Number: 21199920119
Status: Unutilized
Reason: Secured Area

Wisconsin

Bldg. 353
Fort McCoy
Ft. McCoy Co: Monroe WI 54656–
Landholding Agency: Army
Property Number: 21199920120
Status: Unutilized
Reason: Extensive deterioration

Bldg. 6041
Fort McCoy
Ft. McCoy Co: Monroe WI 54656–
Landholding Agency: Army
Property Number: 21199920121
Status: Unutilized
Reason: Extensive deterioration

Bldg. 6043
Fort McCoy
Ft. McCoy Co: Monroe WI 54656–
Landholding Agency: Army
Property Number: 21199920122

Status: Unutilized
Reason: Extensive deterioration

Bldgs. 8118L, 8131L, 8134L
Fort McCoy
Ft. McCoy Co: Monroe WI 54656–
Landholding Agency: Army
Property Number: 21199920123
Status: Unutilized
Reason: Extensive deterioration

[FR Doc. 99–11973 Filed 5–13–99; 8:45 am]

BILLING CODE 4210–29–M

DEPARTMENT OF THE INTERIOR

Bureau of Indian Affairs

Indian Gaming

AGENCY: Bureau of Indian Affairs, Interior.

ACTION: Notice of amendment to approved Tribal-State Compact.

SUMMARY: Pursuant to 25 U.S.C. 2710, of the Indian Gaming Regulatory Act of 1988 (Pub. L. 100–497), the Secretary of the Interior shall publish, in the **Federal Register**, notice of approved Tribal-State Compacts for the purpose of engaging in Class III (casino) gambling on Indian reservations. The Assistant Secretary—Indian Affairs, Department of the Interior, through his delegated authority, has approved the Second Amendment to the Tribal/State Compact for Class III Gaming between the Quileute Tribe and the State of Washington, which was executed on March 4, 1999.

DATES: This action is effective May 14, 1999.

FOR FURTHER INFORMATION CONTACT: George T. Skibine, Director, Indian Gaming Management Staff, Bureau of Indian Affairs, Washington, D.C. 20240, (202) 219–4066.

Dated: May 5, 1999.

Kevin Gover,

Assistant Secretary—Indian Affairs.

[FR Doc. 99–12226 Filed 5–13–99; 8:45 am]

BILLING CODE 4310–02–P

DEPARTMENT OF THE INTERIOR

Bureau of Indian Affairs

Indian Gaming

AGENCY: Bureau of Indian Affairs, Interior.

ACTION: Notice of amendment to approved Tribal-State Compact.

SUMMARY: Pursuant to 25 U.S.C. 2710, of the Indian Gaming Regulatory Act of 1988 (Pub. L. 100–497), the Secretary of the Interior shall publish, in the **Federal Register**, notice of approved Tribal-State Compacts for the purpose of engaging in Class III (casino) gambling on Indian reservations. The Assistant Secretary—Indian Affairs, Department of the Interior, through his delegated authority, has approved the First Amendment to the Tribal/State Compact for Class III Gaming between the Quinault Indian Nation and the State of Washington, which was executed on March 5, 1999.

DATES: This action is effective May 14, 1999.

FOR FURTHER INFORMATION CONTACT: George T. Skibine, Director, Indian Gaming Management Staff, Bureau of Indian Affairs, Washington, D.C. 20240, (202) 219–4066.

Dated: May 5, 1999.

Kevin Gover,

Assistant Secretary—Indian Affairs.

[FR Doc. 99–12227 Filed 5–13–99; 8:45 am]

BILLING CODE 4310–02–P

DEPARTMENT OF THE INTERIOR

Bureau of Indian Affairs

Indian Gaming

AGENCY: Bureau of Indian Affairs, Interior.

ACTION: Notice of amendment to approved Tribal-State Compact.

SUMMARY: Pursuant to 25 U.S.C. 2710, of the Indian Gaming Regulatory Act of 1988 (Pub. L. 100–497), the Secretary of the Interior shall publish, in the **Federal Register**, notice of approved Tribal-State Compacts for the purpose of engaging in Class III (casino) gambling on Indian reservations. The Assistant Secretary—Indian Affairs, Department of the Interior, through his delegated authority, has approved the First Amendment to the Tribal/State Compact for Class III Gaming between the Skokomish Indian Tribe and the State of Washington, which was executed on March 17, 1999.

DATES: This action is effective May 14, 1999.

FOR FURTHER INFORMATION CONTACT: George T. Skibine, Director, Indian Gaming Management Staff, Bureau of Indian Affairs, Washington, D.C. 20240, (202) 219–4066.

Dated: May 5, 1999.

Kevin Gover,

Assistant Secretary—Indian Affairs.

[FR Doc. 99–12228 Filed 5–13–99; 8:45 am]

BILLING CODE 4310–02–P

DEPARTMENT OF THE INTERIOR

Bureau of Land Management

(ID–933–1330–01; IDI–030–98–035)

Notice of Availability of the Record of Decision for the Caribou National Forest Phosphate Leasing Proposal (FEIS 98–0087; Idaho), Correction

AGENCY: Bureau of Land Management, Interior.

ACTION: Notice; Correction.

SUMMARY: This notice corrects the total acreage and legal description of the phosphate tracts proposed for competitive leasing in the Dairy Syncline and Manning Creek Tracts published in 64 FR 72, April 15, 1999 on pages 18630–18631. The notice stated that ''If an appeal is taken the notice of appeal must be filed * * * on or before 30 days from the publication of the Record of Decision in the **Federal Register**.'' This is corrected to ''* * * on or before 30 days from the publication of the availability of the Record of Decision in the **Federal Register**.'' The total acreage figure for the Dairy Syncline Tract of 2,342.27 acres is corrected to 2,302.27 acres. The legal description in T. 9 S., R. 45 E., Section 13 for the Manning Creek Tract is corrected as follows: Sec. 13: SE1/4SW1/4, S1/2SE1/4.

FOR FURTHER INFORMATION CONTACT: Peter Oberlindacher, BLM, Idaho State Office, 1387 S. Vinnell Way, Boise, Idaho 83709, (208) 373–3884.

Dated: May 4, 1999.

William H. Lee,

Acting Branch Chief, Lands and Minerals.

[FR Doc. 99–12258 Filed 5–13–99; 8:45 am]

BILLING CODE 4310–GG–P

DEPARTMENT OF THE INTERIOR

Bureau of Land Management

[WY–030–1310–00]

South Baggs Area Natural Gas Development Project

AGENCY: Bureau of Land Management, Interior.

ACTION: Notice of availability of Draft Environmental Impact Statement.

SUMMARY: The Bureau of Land Management (BLM) announces the availability of the Draft Environmental Impact Statement (DEIS) for the South Baggs Area Natural Gas Project. The DEIS analyzes the environmental consequences of Merit Energy Company's proposal to drill up to fifty

(50) additional natural gas wells in the project area over the next 10 years. The project area encompasses approximately 12,352 acres of Federal, State, and private lands located approximately 3 miles west of the town of Baggs in Carbon County, Wyoming, within the administrative jurisdiction of the BLM Rawlins Field Office. Approximately 43 oil and gas wells have been drilled within the project area to date.

DATES: Written comments on the DEIS will be accepted for 60 days following the date that the Environmental Protection Agency (EPA) publishes their notice of availability of the DEIS in the **Federal Register**. The EPA notice is expected to be published May 14, 1999.

BLM has scheduled a public meeting for June 22, 1999, 7 p.m., at the BLM Rawlins Field Office conference room, 1300 North Third Street, Rawlins, Wyoming, to obtain public comments on the proposed project and the DEIS. BLM will also hold an open house from 1:30 p.m. to 4:00 p.m. on June 22, 1999, at the same location to answer any questions interested parties may have regarding the proposed project.

ADDRESSES: Send written comments to Larry Jackson, Team Leader, Rawlins Field Office, Bureau of Land Management, 1300 N. Third Street, P.O. Box 2407, Rawlins, Wyoming 82301, or e-mail to Larry__Jackson@blm.gov.

FOR FURTHER INFORMATION CONTACT: Larry Jackson, phone 307–328–4231.

SUPPLEMENTARY INFORMATION: The project DEIS analyzes the impacts of drilling from 40 (Alternative A) to 90 (Alternative B) natural gas wells along with constructing access roads, pipelines, and other ancillary facilities (compressor station, water disposal sites, etc.) on 10,067 acres of Federal land and 2,285 acres of non-Federal lands. The exact numbers of additional wells, the locations of those wells, and the timing for drilling them are contingent upon drilling success, production technology, and economic considerations. The No Action Alternative analyzes the current level of drilling and development (43 wells) in the South Baggs Project area and continuation of that level of activity into the future. The Proposed Action would be denied under the No Action Alternative.

Based upon issues and concerns identified during the scoping process, this DEIS focuses on the impacts to air quality, biological and physical resources, transportation, socio-economics, and cumulative effects. The DEIS, in compliance with Section 7(c) of the Endangered Species Act, as amended, incorporates the Biological Assessment for the purpose of identifying endangered or threatened species which may be affected by the proposed action.

Comments, including the names and street addresses of respondents, will be available for public review at the BLM office listed above during regular business hours (7:45 a.m. to 4:30 p.m.), Monday through Friday, except for Federal holidays. Your comments may be published as part of the EIS process. Individual respondents may request confidentiality. If you wish to withhold your name and/or street address from public review or from disclosure under the Freedom of Information Act, you must state this prominently at the beginning of your written comment. Such requests will be honored to the extent allowed by law. All submissions from organizations or businesses, and from individuals identifying themselves as representatives or officials of organizations or businesses, will be made available for public inspections in their entirety.

Dated: May 7, 1999.

Alan L. Kesterke,

Associate State Director.

[FR Doc. 99–12210 Filed 5–13–99; 8:45 am]

BILLING CODE 4310–22–P

DEPARTMENT OF THE INTERIOR

Bureau of Land Management

[WY–070–1310–00]

Notice of Availability of Draft Environmental Impact Statement for the Wyodak Coalbed Methane Project

AGENCY: Bureau of Land Management, Interior.

SUMMARY: Pursuant to the National Environmental Policy Act (NEPA) and implementing regulations, and other applicable statutes, the Bureau of Land Management (BLM) announces the availability of the Draft Environmental Impact Statement (DEIS) analyzing the potential impacts and cumulative effects of proposed coalbed methane (CBM) development on Federal lands and minerals for areas north and south of the city of Gillette, Campbell County, Wyoming. BLM anticipates that an additional 3,000 CBM wells may be drilled and developed by numerous lessees and operators on Federal and non-Federal lands north and south of Gillette by the year 2007 if development success continues. This Environmental Impact Statement (EIS) will also serve as a planning analysis to evaluate the reasonably foreseeable development scenario in the Buffalo Resource Management Plan (RMP).

DATES: Written comments on the DEIS will be accepted for 45 days following the date that the Environmental Protection Agency (EPA) publishes their notice of availability of the DEIS in the **Federal Register**. We expect EPA will publish that notice on May 14, 1999.

ADDRESSES: Send written comments to Richard Zander, Bureau of Land Management, Buffalo Field Office, 1425 Fort Street, Buffalo, WY 82834.

FOR FURTHER INFORMATION CONTACT: Richard Zander, phone 307–684–1161.

SUPPLEMENTARY INFORMATION: Information from five prior environmental analyses of coalbed methane development in the project area—four Environmental Assessments (EA) (Pistol Point, Marquiss, Lighthouse, and North Gillette) and one EIS (Gillette South)—was used to develop the proposed action and alternatives in this DEIS. When preparation of the Gillette South CBM EIS began in June of 1996, the BLM had developed a proposed action to analyze a total of 640 CBM wells. That proposed action was based on the best available information BLM had from industry at that time. It took into account potential development based on depth to coal and what industry knew at that time about the potential to produce methane from the coal. The proposed action also included the prior Marquiss and Lighthouse CBM projects to address developmental changes which had occurred since these two projects had been analyzed in EAs. When the Gillette South CBM EIS was completed in October of 1997, the apparent success of the coalbed methane play was drawing additional operators into the basin.

BLM held a meeting with CBM companies on November 19, 1997, to discuss the implications of the recently signed Record of Decision for the Gillette South EIS. This meeting covered the mitigation steps that would be required of those operators developing Federal minerals. Specifically covered were monitoring requirements, use of the Water Well Agreement, and the formation of a groundwater monitoring group similar to the coal industry's Gillette Area Groundwater Monitoring Organization (GAGMO) Group. CBM companies indicated that an additional 2,600 to 3,000 CBM wells north and south of Gillette could be developed by the year 2007 if development success continues as it has been. With this information and the results of a public scoping meeting held on February 5, 1998, in Gillette, Wyoming, BLM

decided a new EIS would be necessary to address this additional interest.

Project issues include: loss of hydraulic head of groundwater associated with the coal seam; lowering of water levels and increased pumping costs; effects of coalbed methane development on air quality; possible hazardous emissions and pollutants from compressors; erosion and weed infestations from disposal of produced water; royalties on past venting of methane; water table drawdown and other potential hydrologic impacts; cumulative impacts of CBM development; potential impacts to threatened and endangered species, raptors, and fisheries; and potential impacts to ranching and agriculture.

Comments, including names and street addresses of respondents, will be available for public review at the Bureau of Land Management, Buffalo Field Office, 1425 Fort Street, Buffalo, Wyoming, during regular business hours (8:00 a.m. to 4:30 p.m.), Monday through Friday, except holidays, and may be published as part of the final EIS. Individual respondents may request confidentiality. If you wish to withhold your name or street address from public review or from disclosure under the Freedom of Information Act, you must state this prominently at the beginning of your written comment. Such requests will be honored to the extent allowed by law. All submissions from organizations or businesses, and from individuals identifying themselves as representatives of officials of organizations or businesses, will be made available for public inspection in their entirety.

Dated: May 7, 1999.

Alan L. Kesterke,

Associate State Director.

[FR Doc. 99–12211 Filed 5–13–99; 8:45 am]

BILLING CODE 4310–22–P

DEPARTMENT OF THE INTERIOR

Bureau of Land Management

[CO–010–07–1020–00–241A]

Northwest Colorado Resource Advisory Council Meeting

AGENCY: Bureau of Land Management, Interior.

ACTION: Notice of meeting.

SUMMARY: The next meeting of the Northwest Colorado Resource Advisory Council will be held on Tuesday June 15, 1999, at the Bureau of Land Management Office in Grand Junction, Colorado.

DATES: Tuesday, June 15, 1999.

ADDRESSES: For further information, contact David Atkins, Bureau of Land Management (BLM), Northwest Center, 2815 H Road, Grand Junction, Colorado 81506; Telephone (970) 244–3074.

SUPPLEMENTARY INFORMATION: The Northwest Resource Advisory Council will meet on June 15, 1999, at the Bureau of Land Management Office, 2815 H Road, Grand Junction, Colorado. The meeting will start at 9 a.m. and include discussions of the proposed statewide recreation guidelines, Service First, participation of the U.S. Forest Service in the Northwest Resource Advisory Council, grazing permit renewals, fire planning, and wilderness review.

The meeting is open to the public. Interested persons may make oral statements at the meetings or submit written statements following the meeting. Per-person time limits for oral statements may be set to allow all interested persons an opportunity to speak.

Summary minutes of council meetings are maintained at the Bureau of Land Management Office in Grand Junction. They are available for public inspection and reproduction during regular business hours within thirty (30) days following the meeting.

Dated: May 10, 1999.

Mark T. Morse,

Center Manager, Northwest Center, Department of the Interior.

[FR Doc. 99–12209 Filed 5–13–99; 8:45 am]

BILLING CODE 4310–70–P

DEPARTMENT OF THE INTERIOR

Bureau of Land Management

[AZ–952–09–1420–00]

Arizona; Notice of Filing of Plats of Survey

1. The plats of survey of the following described land were officially filed in the Arizona State Office, Phoenix, Arizona on the dates indicated:

A plat, in two sheets, representing the dependent resurvey of a portion of the Principal Meridian (west boundary), a portion of the Third Standard Parallel North, (north boundary), a portion of Mineral Surveys No. 1769 and 3768 and a portion of Homestead Entry Survey No. 340, the subdivision of Section 6 and a metes-and-bounds survey in Section 6, Township 12 North, Range 1 East of the Gila and Salt River Meridian, Arizona, was accepted February 23, 1999 and was officially filed March 4, 1999.

This plat was prepared at the request of the U.S. Forest Service, Prescott National Forest.

A plat representing the dependent resurvey of a portion of the north boundary and a portion of the subdivisional lines, the subdivision of Section 4, and the metes-and-bounds survey in Section 4, Township 39 North, Range 7 East of the Gila and Salt River Meridian, Arizona was accepted October 1, 1998 and was officially filed October 8, 1998.

This plat was prepared at the request of the Bureau of Land Management, Arizona Strip Field Office.

A plat representing the survey of the Ninth Standard Parallel North, (south boundary), the east boundary, and a portion of the subdivisional lines, Township 37 North, Range 19 East, of the Gila and Salt River Meridian, Arizona, was accepted October 5, 1998, and was officially filed October 16, 1998.

This plat was prepared at the request of the Bureau of Indian Affairs, Navajo Area Office.

A plat representing the survey of the west and north boundaries, and a portion of the subdivisional lines, Township 38 North, Range 19 East, of the Gila and Salt River Meridian, Arizona, was accepted April 8, 1999, and was officially filed April 22, 1999.

This plat was prepared at the request of the Bureau of Indian Affairs, Navajo Area Office.

A plat representing the survey of the Ninth Standard Parallel North, (south boundary), the east and north boundaries and a portion of the subdivisional lines, Township 37 North, Range 20 East, of the Gila and Salt River Meridian, Arizona, was accepted October 5, 1998, and was officially filed October 16, 1998.

This plat was prepared at the request of the Bureau of Indian Affairs, Navajo Area Office.

A plat representing the survey of the Fifth Guide Meridian East, (east boundary), the west and north boundaries, and the subdivisional lines, Township 38 North, Range 20 East, of the Gila and Salt River Meridian, Arizona, was accepted April 8, 1999, and was officially filed April 22, 1999.

This plat was prepared at the request of the Bureau of Indian Affairs, Navajo Area Office.

A plat representing the survey of the Ninth Standard Parallel North, (south boundary), Township 37 North, Range 21 East, of the Gila and Salt River Meridian, Arizona, was accepted April 5, 1999, and was officially filed April 15, 1999.

This plat was prepared at the request of the Bureau of Indian Affairs, Navajo Area Office.

A plat representing the survey of the Ninth Standard Parallel North, (south boundary), Township 37 North, Range 22 East, Gila and Salt River Meridian, Arizona was accepted April 5, 1999, and was officially filed April 15, 1999.

This plat was prepared at the request of the Bureau of Indian Affairs, Navajo Area Office.

A plat representing the survey of the Ninth Standard Parallel North, (south boundary), Township 37 North, Range 23 East, of the Gila and Salt River Meridian, Arizona was accepted April 5, 1999, and was officially filed April 15, 1999.

This plat was prepared at the request of the Bureau of Indian Affairs, Navajo Area Office.

A plat representing the survey of the Ninth Standard Parallel North, (south boundary), Township 37 North, Range 24 East, of the Gila and Salt River Meridian, Arizona, was accepted April 5, 1999, and was officially filed April 15, 1999.

This plat was prepared at the request of the Bureau of Indian Affairs, Navajo Area Office.

A plat representing the retracement of a portion of the Arizona-Nevada State Boundary, (west boundary), the dependent resurvey of a portion of the north boundary and a portion of the subdivisional lines, and the subdivision of Sections 3, 4, and 5, Township 39 North, Range 16 West, of the Gila and Salt River Meridian, Arizona, was accepted February 22, 1999, and was officially filed March 4, 1999.

This plat was prepared at the request of the Bureau of Land Management, Arizona Strip Field Office.

A plat representing the dependent resurvey of a portion of the subdivision of Section 20 and a mete-and-bounds survey in Section 20, Township 20 North, Range 22 West, of the Gila and Salt River Meridian, Arizona, was accepted March 30, 1999, and was officially filed April 9, 1999.

This plat was prepared at the request of the Bureau of Land Management, Lake Havasu Field Office.

A plat representing the dependent resurvey of a portion of the north boundary and a portion of the subdivisional lines and the subdivision of Section 5 in Township 3 South, Range 11 East, of the Gila and Salt River Meridian, Arizona, was accepted February 23, 1999, and was officially file March 4, 1999.

This plat was prepared at the request of the Bureau of Land Management, Tucson Field Office.

A plat, in seven sheets, representing the survey of the legal descriptive boundary of the Dos Cabezas Mountains Wilderness Area in Townships 13 and 14 South, Ranges 27 and 28 East, of the Gila and Salt River Meridian, Arizona, was accepted November 3, 1999, and was officially file November 13, 1998.

This plat was prepared at the request of the Bureau of Land Management, Arizona State Office.

A plat representing the dependent resurvey of a portion of the south boundary, a portion of the subdivisional lines, and the metes-and-bounds survey of the Dos Cabezas Mountains Wilderness Area boundary in Township 13 South, Range 27 East, of the Gila and Salt River Meridian, Arizona, was accepted October 26, 1998, and was officially filed November 6, 1998.

This plat was prepared at the request of the Bureau of Land Management, Arizona State Office.

A plat, in four sheets, representing the dependent resurvey of a portion of the subdivisional lines, Mineral Survey No. 1072, and a portion of Mineral Survey No. 3931, and the metes-and-bounds survey of the Dos Cabezas Mountains Wilderness Area boundary in Township 14 South, Range 27 East, of the Gila and Salt River Meridian, Arizona, was accepted October 26, 1998, and officially filed November 6, 1998.

This plat was prepared at the request of the Bureau of Land Management, Arizona State Office.

A plat representing the dependent resurvey of a portion of the west boundary and a portion of the subdivisional lines, the subdivision of Section 30 and 31, and the metes-and-bounds survey of the Dos Cabezas Mountains Wilderness Area boundary, in Township 13 South, Range 28 East, of the Gila and Salt River Meridian, Arizona, was accepted October 26, 1998, and was officially filed November 6, 1998.

This plat was prepared at the request of the Bureau of Land Management, Arizona State Office.

A plat, in five sheets, representing the dependent resurvey of a portion of the west boundary, a portion of the north boundary, and a portion of the subdivisional lines, the subdivision of Sections 8 and 9 and the metes-and-bounds survey of the Dos Cabezas Mountains Wilderness Area boundary in Township 14 South, Range 28 East, of the Gila and Salt River Meridian, Arizona, was accepted October 21, 1998, and was officially filed October 30, 1998.

This plat was prepared at the request of the Bureau of Land Management, Arizona State Office.

A plat representing the dependent resurvey of a portion of the subdivisional lines and a portion of the subdivision of Sections 3 and 10, the subdivision of Section 3 and a metes-and-bounds survey in Section 10, Township 15 South, Range 28 East, of the Gila and Salt River Meridian, Arizona, was accepted March 30, 1999, and was officially filed April 4, 1999.

This plat was prepared at the request of the National Park Service.

2. These plats will immediately become the basic records for describing the land for all authorized purposes. These plats have been placed in the open files and are available to the public for information only.

3. All inquires in relation to these lands should be sent to the Arizona State Office, Bureau of Land Management, 222 N. Central Avenue, P.O. Box 1552, Phoenix, Arizona 85001–1552.

Kenny D. Ravnikar,

Chief Cadastral Surveyor of Arizona.

[FR Doc. 99–12180 Filed 5–13–99; 8:45 am]

BILLING CODE 4310–32–P

DEPARTMENT OF THE INTERIOR

Bureau of Land Management

[NM–050–1150–00; NMNM 95118]

Notice of Proposed Withdrawal and Opportunity for Public Meeting; New Mexico

AGENCY: Bureau of Land Management (BLM), Interior.

ACTION: Notice.

SUMMARY: The Bureau of Land Management proposes to withdraw 116.12 acres of public land for protection of the Federally listed Zuni (Rhizome) *Erigeron rhizomatus* plant. The area is known as the Sawtooth Area of Critical Environmental Concern (ACEC) and is located in Catron County, New Mexico. The Endangered Species Act mandates Federal agencies to utilize their authority to further the purposes of the Act by carrying out conservation programs for the benefit of such threatened plants. This notice closes the public lands for up to 2 years from location and entry under the United States mining laws. The public lands will remain open to mineral leasing.

DATES: Comments and meeting requests should be received on or before August 12, 1999.

ADDRESSES: Comments and meeting request should be sent to the Socorro Field Manager, 198 Neel Avenue, Socorro, New Mexico 87801.

FOR FURTHER INFORMATION CONTACT: Lois Bell, BLM, Socorro Field Office, 198 Neel Avenue, Socorro, New Mexico 87801, or telephone (505) 835–0412.

SUPPLEMENTARY INFORMATION: On April 22, 1999, a petition was approved allowing the Bureau of Land Management to file an application to withdraw the following described public land from settlement, sale, location, or entry under the general land laws, including the mining laws, subject to valid existing rights:

New Mexico Principal Meridian

T. 1 N., R. 11 W.,
Sec. 6, lot 7, SE¼SW¼ and SW¼SE¼.

The area described contains 116.12 acres in Catron County.

The purpose of the proposed withdrawal is for protection of a Federally listed threatened plant. Until an application is filed, no further action will be taken on this proposal.

For a period of 90 days from the date of publication of this notice, all persons who wish to submit comments, suggestions, or objections in connection with the proposed withdrawal may present their views in writing to the BLM Socorro Field Manager.

Notice is hereby given that an opportunity for a public meeting is afforded in connection with the proposed withdrawal. All interested persons who desire a public meeting for the purpose of being heard on the proposed withdrawal must submit a written request to the BLM Socorro Field Manager within 90 days from the date of publication of this notice. Upon determination by the authorized officer that a public meeting will be held, a notice of time and place will be published in the **Federal Register** at least 30 days before the scheduled date of the meeting.

The application will be processed in accordance with the regulations set forth in 43 CFR part 2300.

For a period of 2 years from the date of publication of this notice in the **Federal Register**, the public land will be segregated as specified above unless the application is denied or canceled or the withdrawal is approved prior to that date. Upon approval of the authorized officer, temporary uses may be permitted during this segregative period. These uses are limited to grazing and other discretionary land use authorizations not precluded by the Socorro Resource Management Plan.

Dated: May 7, 1999.

Thomas E. Gow,

Assistant Field Manager.

[FR Doc. 99–12184 Filed 5–13–99; 8:45 am]

BILLING CODE 4310–MW–P

DEPARTMENT OF THE INTERIOR

Minerals Management Service

Notice and Agenda for Meeting of the Royalty Policy Committee of the Minerals Management Advisory Board

AGENCY: Minerals Management Service, Interior.

ACTION: Notice of meeting.

SUMMARY: The Secretary of the Department of the Interior has established a Royalty Policy Committee (Committee), on the Minerals Management Advisory Board, to provide advice on the Department's management of Federal and Indian minerals leases, revenues, and other minerals related policies. Committee membership includes representatives from States, Indian Tribes and allottee organizations, minerals industry associations, the general public, and Federal Departments. At this ninth meeting, the Minerals Management Service (MMS) will be prepared to discuss Electronic Freedom of Information Act implementation, Deepwater Transportation Allowances, MMS's Strategic Plan for 2001–2005, Reengineering—Overview and Operational Models, the new Appeals Rule, the Royalty-in-Kind Pilot, and Net Receipts Sharing. The Committee will also consider reports by the Phosphate, Trona and Leasable Solid Minerals; and the Coal Subcommittees.

DATES: The meeting will be held on: Wednesday, June 16, 1999, 8:30 a.m. to 5 p.m. Mountain Standard time.

ADDRESSES: The meeting will be held at the Sheraton Denver West, 360 Union Boulevard, Lakewood, Colorado 80228, telephone number (303) 987–2000.

FOR FURTHER INFORMATION CONTACT: Mr. Gary L. Fields, Chief, Program Services Office, Royalty Management Program, Minerals Management Service, P.O. Box 25165, MS 3062, Denver, CO 80225–0165, telephone number (303) 231–3102, fax number (303) 231–3781.

SUPPLEMENTARY INFORMATION: The location and dates of future meetings will be published in the **Federal Register**. The meetings will be open to the public without advanced registration. Public attendance may be limited to the space available. Members of the public may make statements during the meetings, to the extent time permits, and file written statements with the Committee for its consideration. Written statements should be submitted to Mr. Gary L. Fields, at the address listed in the **FOR FURTHER INFORMATION CONTACT** section. Minutes of Committee meetings will be available 10 days following each meeting for public inspection and copying at MMS's Royalty Management Program, Building No. 85, Denver Federal Center, Denver, Colorado.

These meetings are being held by the authority of the Federal Advisory Committee Act, Pub. L. 92–463, 5 U.S.C. Appendix 1, and Office of Management and Budget Circular No. A–63, revised.

Dated: May 10, 1999.

R. Dale Fazio,

Acting Associate Director for Royalty Management.

[FR Doc. 99–12199 Filed 5–13–99; 8:45 am]

BILLING CODE 4310–MR–P

DEPARTMENT OF LABOR

Office of the Secretary

Presidential Task Force on Employment of Adults With Disabilities; Notice of Town Hall Meeting

AGENCY: Office of the Secretary, Labor.

ACTION: Notice of Town Hall meeting.

SUMMARY: Pursuant to Executive Order No. 13078, authorizing the Presidential Task Force on Employment of Adults with Disabilities (PTFEAD), notice is given of the first Town Hall Meeting. The purpose of the Task Force is to create a ''coordinated and aggressive national policy to bring adults with disabilities into gainful employment at a rate that is as close as possible to that of the general adult population.'' The purpose of this Town Hall Meeting is to invite the public to participate and discuss their thoughts, concerns, and experiences with Task Force members. The topics to be addressed at this Town Hall Meeting are Expanding Employment Opportunities for Youth with Disabilities, and Expanding Entrepreneurial Opportunities for Self Employment of Adults with Disabilities.

DATES: The PTFEAD Town Hall Meeting will be held on Thursday, June 3, 1999, from 9:00 a.m. to approximately 4:00 p.m. Registration is from 9:00 a.m. to 10:00 a.m. The date, location, and time for subsequent Town Hall Meetings will be announced in advance in the **Federal Register**.

ADDRESSES: The Westin Bonaventure Hotel and Suites, 404 South Figueroa Street, Los Angeles, California. All interested parties are invited to attend this Town Hall Meeting. Seating may be limited and will be available on a first-come, first-serve basis.

FOR FURTHER INFORMATION CONTACT: Ms. Heather Hammer, Senior Associate,

Technical Assistance and Training Corporation, 2409 18th Street NW, Washington, DC 20009 (telephone (202) 408–8282 ext. 227; TTY (202) 408–8033; fax (202) 408–8308; E-mail: *hammerh@tatc.com*). These are not toll-free numbers.

SUPPLEMENTARY INFORMATION: Pursuant to Executive Order No. 13078, the Presidential Task Force on Employment of Adults with Disabilities (PTFEAD), notice is given of the first Town Hall Meeting.

The purpose of the PTFEAD is to develop a ''coordinated and aggressive national policy to bring adults with disabilities into gainful employment at a rate that is as close as possible to that of the general adult population.'' Although more students with disabilities are graduating from high schools and colleges, compared to students without disabilities, those with disabilities drop out of school at higher rates and they enroll in post-secondary education at lower rates. Moreover, youth with severe disabilities from diverse linguistic and cultural backgrounds are at an even greater risk of dropping out of school and facing unemployment. Some of the key issues to be addressed at the Town Hall Meeting include the accessibility of youths with disabilities to employment services and support, higher education and vocational training, and career planning, as well as the impact of employer attitudes, and discrimination. The PTFEAD will pay special attention to the added barriers that make full participation in school and the workforce problematic for minority youth with disabilities.

With respect to the expansion of entrepreneurial opportunities for the self employment of adults with disabilities, the Town Hall Meeting will address: (1) The need to expand the opportunities available for those who already have businesses and need contracts, counseling, and technical assistance regarding procurement and opportunities, and (2) the need to expand opportunities for those who want to become self employed or small business owners.

The membership of the PTFEAD was appointed by President Clinton, and includes the: Secretary of Labor, Chair of the PTFEAD; Chair of the President's Committee on Employment of People with Disabilities, Vice Chair of the PTFEAD; Secretary of Education; Secretary of Veterans Affairs; Secretary of Health and Human Services; Commissioner of Social Security; Secretary of the Treasury; Secretary of Commerce; Secretary of Transportation; Director of the Office of Personnel Management; Administrator of the Small Business Administration; Chair of the Equal Employment Opportunity Commission; Chairperson of the National Council on Disability; Commissioner of the Federal Communications Commission; and such other senior executive branch officials as may be determined by the Chair of the PTFEAD.

Agenda

The Town Hall Meeting will focus on two topics: (1) expanding employment opportunities for youth with disabilities, and (2) expanding entrepreneurial opportunities for the self employment of adults with disabilities.

Public Participation

Members of the pubic wishing to present oral statements to the PTFEAD should forward their requests to Ms. Heather Hammer, Senior Associate, Technical Training and Assistance Corporation as soon as possible and at least four days before the meeting. Requests should be made by telephone, fax machine, or mail, as shown above. Time permitting, the members of the PTFEAD will attempt to accommodate all such requests by reserving time for presentations. The order of persons making such presentations will be assigned in the order in which the requests are received. Members of the public must limit oral statements to five minutes, but extended written statements may be submitted for the record. Members of the public may also submit written statements for distribution to the PTFEAD membership and inclusion in the public record without presenting oral statements. Such written statements should be sent to Ms. Heather Hammer, as shown above, by mail or fax at least five business days before the meeting.

Minutes of all Town Hall Meetings and summaries of other documents will be available to the public on the PTFEAD web site *www.dol.gov*. Any written comments on the minutes should be directed to Ms. Heather Hammer, as shown above.

Reasonable accommodations will be available. Persons needing any special assistance such as sign language interpretation or other special accommodation, are invited to contact Ms. Heather Hammer, as shown above.

Signed at Washington, DC, this 10th day of May, 1999.

Rebecca L. Ogle,

Executive Director, Presidential Task Force on Employment of Adults with Disabilities.

[FR Doc. 99–12218 Filed 5–13–99; 8:45 am]

BILLING CODE 4510–23–M

DEPARTMENT OF LABOR

Employment and Training Administration

Welfare-to-Work Census 2000 Employment Project

AGENCY: Employment and Training Administration (ETA), DOL.

ACTION: Notice of availability of funds; solicitation for grant applications.

SUMMARY: The U.S. Department of Labor (DOL), Employment and Training Administration (ETA) announces a special round of competition under the Welfare-to-Work (WtW) grant program to facilitate the employment of WtW program participants as Census 2000 enumerators in local areas across the country. The Department of Labor, in partnership with the Department of Commerce, seeks a single private organization with a nationwide network of community-based local providers or affiliates to serve as an intermediary between local Census Bureau offices across the country and the WtW local level formula and competitive grantees. The WtW program assists States and local communities to provide the transitional employment assistance needed to move hard-to-employ recipients of Temporary Assistance for Needy Families (TANF), and certain noncustodial parents, who have experienced or have characteristics associated with long-term welfare dependence, into lasting unsubsidized jobs. This announcement describes the special conditions under which applications will be received for the WtW Census 2000 Employment Project and the criteria DOL/ETA will use to select which application it will fund. This announcement includes all of the information and forms needed to apply for this WtW grant opportunity.

DATES: The closing date for receipt of applications under this announcement is Friday, July 16, 1999. For the funding cycle covered by this announcement, complete applications must be received at the address below no later than 2 p.m. EST (Eastern Standard Time). Except as provided below, grant applications received after this date and time will not be considered.

ADDRESSES: U.S. Department of Labor, Employment and Training Administration, Division of Federal Assistance, Attention: Mr. Willie E. Harris, SGA/DFA 99–013, 200 Constitution Avenue, NW, Room S4203, Washington, D.C. 20210.

FOR FURTHER INFORMATION CONTACT: Questions should be faxed to Mr. Willie E. Harris, Grant Management Specialist, Division of Federal Assistance, Fax: (202) 219–8739. This is not a toll-free number. Questions may also be sent via electronic mail to ''disgu-sga@doleta.gov.'' All inquiries sent via fax or e-mail should include the SGA number (DFA 99–013) and a contact name and phone number. This announcement is also being published on the Internet on the Employment and Training Administration's Welfare-to-Work Home Page at http://wtw.doleta.gov. Commonly asked questions and answers with regard to the WtW competitive grants and the WtW program in general, and copies of the Interim Final Rule governing the Welfare-to-Work program, including activities conducted under the competitive grants, are also available on the WtW Home Page. Award notification will be also published on the WtW Home Page.

SUPPLEMENTARY INFORMATION:

I. Authority

Section 403(a)(5)(B) of Title IV of the Social Security Act. Regulations governing the WtW program are at 20 CFR Part 645, published at 62 FR 61588 (November 18, 1997).

II. Submission of Applications

One original plus two copies of the application must be submitted. Proposals must be submitted by the applicant only. All applications must be single-spaced, and on single-sided, numbered pages. A font size of at least 12 pitch is required.

Section I of the application must include the following required elements: (A) Project Financial Plan, including the SF–424, and a line-item budget with justification, (B) Executive Summary, and (C) Evidence of State and local consultation. Section I will not count against the application page limits. Failure to include all elements required in this section will result in disqualification of the application. Applications will not be reviewed if a list of all appropriate State and PIC/political subdivision certifications received and held by the applicant (or evidence of efforts to consult, as described in Section IV below) is not included. No additional information or materials will be accepted by the Department of Labor after the closing date, unless such additional material is specifically requested by the Grant Officer.

Section II of the application, the project narrative, shall not exceed fifteen (15) pages for the Government Requirement/Statement of Work section, as described below in the ''Required Content for the WtW Census 2000 Employment Project,'' plus up to an additional ten (10) pages for attachments, to include no information that is critical to the review of the proposal. Letters of support for a proposal should NOT be submitted and will count against the page limits.

Acceptable Methods of Submission

Applications may be hand-delivered or mailed. Hand-delivered applications must be received at the address identified above by the date and time specified. Overnight mail deliveries will be treated as hand-deliveries. Mailed applications that arrive after the closing date will be accepted if they are post-marked at least five (5) days prior to the closing date. Applications submitted via overnight mail that arrive after the closing date will be accepted if they are post-marked at least two (2) days prior to the closing date. Otherwise, late applications will not be accepted. Telegraphed and/or faxed applications will not be accepted.

Applications may be withdrawn by written notice or telegram (including mailgram), or in person if the representative's identity is made known, and the representative signs a receipt for the application.

OMB Approval of Paperwork Burden

According to the Paperwork Reduction Act of 1995, no persons are required to respond to a collection of information unless such collection displays a valid OMB control number. The valid OMB control number for this information collection is 1205–0402. The time required to complete this information collection is estimated to average 20 hours for the preparation of the application proposal, including the time to review the instructions, search existing data resources, gather data needed, and complete and review the information, plus up to an additional 80 hours to meet the consultation requirements. Comments concerning this burden estimate or any other aspect of this collection of information, including suggestions for reducing this burden, to the U.S. Department of Labor, Office of Job Training Programs, Room N4459, Washington, DC 20210 (Paperwork Reduction Project 1205–0402). Comments may be reflected in the development of future solicitations.

Catalog of Federal Domestic Assistance Number

The Welfare-to-Work program is listed in the Catalog of Federal Domestic Assistance at No. 17.253, ''Employment and Training Assistance—Welfare-to-Work Grants to States & Local Entities for Hard-to-Employ Welfare Recipient Programs.''

III. Program Scope and Funding

The WtW Census 2000 Employment Project will be expected to achieve the purpose of all WtW grants:

To provide transitional assistance which moves welfare recipients into unsubsidized employment providing good career potential for achieving economic self-sufficiency.

This transitional assistance is to be provided through a ''work first'' service strategy in which recipients are engaged in employment-based activities. Grant funds may be used to provide needed basic and/or vocational skills training as a post-employment service in conjunction with either subsidized or unsubsidized employment. This flexibility, established in the Regulations, reflects the basic ''work first'' philosophy of the WtW legislation, and recognizes the critical importance of continuous skills acquisition and lifelong learning to achieving economic self-sufficiency.

The primary goals specific to the WtW Census 2000 Employment Project are to ensure that (1) WtW participants, who are successfully identified and recruited by the grantee, are part of a viable pool from which Census recruiters can hire and train Census 2000 enumerators; and (2) WtW Census hires receive the intensive community-based support they need to remain in the workforce after their Census 2000 jobs end.

The Department of Commerce's (DOC) Bureau of the Census has as its mission to provide an accurate national count for Census 2000. In various pre-Census operations leading up to next year's Decennial Census, the Bureau has recruited, trained and hired over 4,700 welfare recipients. These workers were based in urban, suburban and rural areas throughout the nation. They have shown themselves to be well-suited to assist the Bureau's strategic and principal goal of providing an accurate population count in every locale.

Census 2000 offers a unique opportunity for individuals who are currently receiving welfare, as well as noncustodial parents of children on welfare, to establish a work history with a credible employer. Temporary jobs as

Census enumerators have flexible hours, do not require that individuals leave their own community, and offer low-skilled individuals wages of $8.25 to $18.50 an hour, depending on the locality. The jobs are expected to last approximately eight to twelve weeks.

In preparing for Census 2000, the Census Bureau is aware of the obstacles to hiring the enormous number of enumerators necessary to get an accurate count of the population, particularly in low-income and high-crime neighborhoods. In the past, the Census Bureau has hired residents of census tracts to assist in the enumeration of the residents who live there.

DOC is currently operating pilot programs in Maryland and Virginia, called the Chesapeake Initiative, which serve as test sites for implementation of WtW Census 2000 Employment Project nationwide next year. In this pilot project, a statewide non-profit organization in each State is responsible for identifying and recruiting welfare recipients, providing basic job readiness and supportive services during Census employment, including child care, transportation, etc., and placing the individuals in permanent employment once Census employment has ended.

For the WtW Census 2000 Employment Project, the Departments of Labor and Commerce hope to expand on and profit from the knowledge gained through the pilot project underway in Maryland and Virginia. Through the competitive application process, DOL and DOC will select a national organization that has an established delivery system of well-networked local affiliates throughout all States. This organization would be responsible for (1) identifying large numbers of eligible WtW participants qualified for Census employment, through coordination with WtW formula and competitive grants, and through networks of community-based service providers developed by the applicant and local Census offices; (2) provide a comprehensive array of supportive services to participants before, during and after employment as Census enumerators, building on or linking with existing resources wherever possible; (3) place participants in permanent employment following their employment with Census 2000, and (4) set up local arrangements so that ongoing job retention and supportive services will be available to participants either through the grant or through other local WtW programs.

Note: It is assumed that job retention and supportive services provided through the WtW Census 2000 Employment Project grant will be of relatively short duration after placement of a participant in a post-Census job. Applicants are encouraged to describe in detail what arrangements they have made with other WtW grantees at the local level to provide longer-term supportive services and follow-up for WtW Census Employment Project participants.

For the most part, the Census jobs targeted for WtW participants will be temporary positions as Census enumerators. A Census enumerator is responsible for locating households, listing addresses, as well as conducting interviews with respondents. Enumerators usually work in their own neighborhoods or communities. In order to find people at home, enumerators need to be able to work evenings and weekends. Census enumerators receive paid training on how to locate and list addresses, explain the purpose of the Census to residents, ask questions as worded on Census forms, and record data on Census forms. Potential enumerators must take a written test to be considered for employment. The test consists of 28 multiple choice questions designed to measure the skills and abilities required to perform a variety of Census jobs, like reading, math, following instructions, and map reading skills. Applicants for Census jobs are given 30 minutes to complete the test. Applicants who score high on the employment test stand a better chance of being hired. Applicants may re-take the test if they like, though the majority of applicants (4 of every 5) pass the test on their first try.

All applications for the WtW Census 2000 Employemnt Project will be reviewed under the criteria set forth in Part VII of this announcement.

Funding Availability

Up to $20 million will be available for a single grant to implement the WtW Census 2000 Employment Project. This amount will come out of the $240 million available for Round Three of the WtW Competitive Grants (SGA number DFA 99–003, published in the **Federal Register** on January 26, 1999). It is expected the project will serve approximately 7,500 to 10,000 participants nationwide.

Note: This does not constitute a new goal of welfare hires for the Department of Commerce or the Census Bureau.

Award Period

The planned performance period for the WtW Census 2000 Employment Project will be approximately 18 months. This time frame will allow four months for planning, start-up and setting up relationships at the local level; ten months of program operations; and four months of close-out and follow-up activities. Note that for most Census enumerators, employment will begin in mid-April 2000, and last approximately eight to twelve weeks. No obligation or commitment of funds will be allowed beyond the grant period of performance. Any unspent grant funds must be returned to the Federal government.

IV. Eligible Grant Applicants

For the WtW Census 2000 Employment Project, eligible applicants are private organizations that have an established nationwide delivery system of community-based local affiliates throughout all States to serve as an intermediary between local Census Bureau offices and the WtW local level formula and competitive grantees. As established in the WtW Regulations (20 CFR Part 645.500), private entities seeking WtW competitive grant funding are required to apply in conjunction with the PIC(s) or political subdivision(s) for the areas in which the project is to operate. The term ''in conjunction with'' shall mean that the application must include a signed certification by both the applicant and either the appropriate PIC(s) or political subdivision(s) indicating that:

1. The applicant has consulted with the appropriate PIC(s)/political subdivision(s) during the development of the application; and

2. The activities proposed in the application are consistent with, and will be coordinated with, the WtW efforts of the PIC(s)/political subdivision(s).

If the applicant is unable to obtain the certification, it will be required to include information describing the efforts which were undertaken to consult with the PIC(s)/political subdivision(s) and indicating that the PIC(s)/political subdivision(s) were provided a sufficient opportunity to cooperate in the development of the project plan and to review and comment on the application prior to its submission to the Department of Labor. ''Sufficient opportunity for PIC/political subdivision review and comment'' shall mean at least 30 calendar days.

The certification, or evidence of efforts to consult, must be with either each PIC or each political subdivision in the service area in which the proposed project is to operate. For the purposes of this portion of the application, applicants must demonstrate, through written documentation such as registered mail receipt, that project proposals were shared with the PIC/political subdivision in a timely manner.

Note: Electronic mail messages may be acceptable as evidence of consultation. In

addition, a sample format for State and local certifications can be found in Appendix C that applicants may choose to use. All certifications must be dated prior to July 16, 1999.

Applicants must submit a list of all local entities from whom they have obtained certification of coordination. Applicants will maintain copies of all certifications in their own files. Although an important part of their application, certifications need not be submitted to DOL. For those applicants that are deemed to be competitive, DOL will verify that certifications are on file and that they are dated prior to the closing date of the SGA.

The Department of Labor intends to facilitate the consultation process for all potential applicants. DOL/ETA will release a Training and Employment Information Notice informing the WtW employment and training system about the WtW Census 2000 Employment Project and the potential role of local Private Industry Council in the consultation process. The names and addresses of State WtW Coordinators and all WtW Competitive grantees can be found on the WtW website (http://wtw.doleta.gov). In addition, a complete listing of WtW local service delivery areas, as well as State Welfare contacts, can be found at http://www.ttrc.doleta.gov/common/directories/.

Applicants should be aware that six States (Idaho, Mississippi, Ohio, South Dakota, Utah, and Wyoming) do not have WtW State formula programs. In these States, applicants are encouraged to consult with WtW Competitive grants, State and local TANF agencies, State and local Census agencies and/or appropriate tribal entities to promote coordination of program activities in these areas. However, applicants will not be disqualified if they have not applied in conjunction with local areas within these six States.

State-Level Consultation

All applicants must submit their applications to the Governors of all States in which the project will operate, or, at the discretion of the Governor, to the designated State administrative entity for the WtW program, for review and comment prior to submission of the application to the Department of Labor.

When submitted to DOL, the application must include any comments from the Governor or his/her designee or must include information indicating that the Governor was provided a sufficient opportunity for review and comment prior to submission to the Department. ''Sufficient opportunity for State review and comment'' shall mean at least 15 calendar days. For the purposes of this portion of the application, information indicating that the Governor was provided opportunity for review must be demonstrated by written documentation, such as registered mail receipt, that project applications were submitted to the Governor or his/her designee in a timely manner. A sample format for State and local certifications can be found in Appendix C that applicants may choose to use. All certifications must be dated prior to July 16, 1999.

Applicants must submit a list of all Governors from whom they have obtained certification of consultation. Applicants will maintain copies of all certifications in their own files. Although an important part of their application, certifications need not be submitted to DOL. For those applicants that are deemed to be competitive, DOL will verify that certifications are on file and that they are dated prior to the closing date of the SGA.

Coordination With Tribal Grantees

Although consultation with Indian and Native American (INA) entities is not required for the WtW Census Employment Project, applicants are encouraged to coordinate with tribal entities and corresponding local Census Offices to achieve maximum geographic saturation in this project.

Applicants are encouraged to coordinate with Indian and Native American Welfare-to-Work grantees, grantees operating an Indian JTPA/WIA program and other Indian and Native American tribes/organizations that have experience in operating employment and training programs within the Native American communities. A listing of the INA WtW grantees can be found at http://www.wdsc.org/dinap/dinapw2w/index.html. In addition, INA JTPA grantees listing can be found at http://www.wdsc.org/dinap. Projects may coordinate either directly with appropriate tribal entities or may choose to use competitive subcontracts/grants with tribal or other entities that have experience in planning and coordination activities in the Native American communities.

Lobbying Disclosure Act of 1995

Entities described in section 501(c)(4) of the Internal Revenue Code that engage in lobbying activities are not eligible to receive funds under this announcement. The Lobbying Disclosure Act of 1995, 2 U.S.C. 1601 *et seq.*, prohibits the award of Federal funds to these entities if they engage in lobbying activities.

V. Program and Administrative Requirements

Participant Eligibility and Funding Expenditures

The WTW Census 2000 Employment Project will be required to meet the targeting provisions described at 20 CFR Parts 645.211–645.213.

Note: The WtW Regulations are available at the WtW Internet web site at http://wtw.doleta.gov.

These provisions dictate that a minimum of 70 percent of the funds in each WtW competitive grant must be used to serve hard-to-employ individuals as described in Sec. 645.212. Furthermore, no more than 30 percent of the funds in each grant may be used to serve individuals with characteristics predictive of long-term welfare dependence, as described in Sec. 645.213.

Allowable Uses of Funds

Competitive grant funds shall be spent only for those allowable activities identified in the WtW Regulations, at 20 CFR Part 645.220 and set forth below; for appropriate administrative costs; and for information technology costs in accordance with 20 CFR 645.235(c)(3).

WtW allowable activities are:

(a) Job readiness activities financed through job vouchers or through contracts with public or private providers.

(b) Employment activities which consist of any of the following: (1) Community service programs; (2) Work experience programs; (3) Job creation through public or private sector employment wage subsidies; and (4) On-the-job training.

(c) Job placement services financed through job vouchers or through contracts with public or private providers subject to the payment requirements at Sec. 645.230(a)(3).

(d) Post-employment services financed through job vouchers or through contracts with public or private providers, which are provided after an individual is placed in one of the employment activities listed in paragraph (b) above, or in any other subsidized or unsubsidized job. Post-employment services include, but are not limited to, such services as: (1) Basic educational skills training; (2) Occupational skills training; (3) English as a second language training; and (4) Mentoring.

(e) Job retention services and support services which are provided after an individual is placed in a job readiness activity, as specified in paragraph (a) above, in one of the employment

activities, as specified in paragraph (b) above, or in any other subsidized or unsubsidized job. These services can be provided with WtW funds only if they are not otherwise available to the participant. Job retention and support services include, but are not limited to, such services as: (1) Transportation assistance; (2) Substance abuse treatment (except that WtW funds may not be used to provide medical treatment); (3) Child care assistance; (4) Emergency or short-term housing assistance; and (5) Other supportive services.

(f) Individual development accounts which are established in accordance with section 404(h) of the Act.

(g) Intake, assessment, eligibility determination, development of an individualized service strategy, and case management may be incorporated in the design of any of the allowable activities listed in paragraphs (a) through (f) above.

It is expected that in the WtW Census 2000 Employment Project, the majority of services will fall under the job readiness, job placement, post-employment services and job retention and supportive services categories.

Administrative Costs

Requirements concerning allowable costs and the 15 percent limitation on administrative costs for WtW competitive grants will apply to the WTW Census 2000 Employment Project and are defined in the WtW Regulations at 20 CFR Part 645.235. All proposed costs must be reflected as either a direct charge to specific budget line items, or as an indirect cost. Indirect costs and direct administrative costs are allowable, but combined, these costs cannot exceed 15 percent of the total grant. The administrative costs negotiated in the final grant document may be below fifteen percent.

Only costs which result from applying a federally-approved indirect cost rate may be entered on the ''indirect cost'' line item of the budget. If an indirect cost rate is used, the applicant must include documentation from the cognizant Federal agency which includes the approved rate, the cost base against which it is applied, and the approval date.

All applicants will be expected to justify proposed costs (see Project Financial Plan, in the ''Required Content for the WtW Census 2000 Employment Project''). Profits are not an allowable use of grant funds.

Use of Federal Funds

Federal funds cannot be used to support activities which would be provided in the absence of those funds. Grant funds may cover only those costs which are appropriate and reasonable. Federal grant funds may only be used to acquire equipment which is necessary for the operation of the grant. The grantee must receive prior approval from the DOL/ETA Grant Officer for the purchase and/or lease of any property and/or equipment with a per unit acquisition cost of $5,000 or more, and a useful life of more than one year as defined in ''Grants and Agreements with Institutes of Higher Education, Hospitals and Other Non-Profit Organizations,'' codified at 29 CFR Part 95 (also known as OMB Circular A–110). This restriction includes the purchase of Automated Data Processing (ADP) equipment. A request for such prior approval may be included in the grant application or submitted after the grant award. Requests submitted after the grant award must be directed through the Grant Officer Technical Representative (GOTR) and must include a detailed description and cost of the items to be acquired.

Grant funds also may not be used to cover any project-related costs incurred prior to the effective date of the grant award. In making a grant award, DOL/ETA has no obligation to provide any future additional funding in connection with the grant award.

Pursuant to 20 CFR Part 645.235(c)(3), the costs of information technology—computer hardware and software—needed for tracking or monitoring under a WtW grant shall not be subject to the fifteen percent limitation on administrative costs.

Year 2000 Compliance

Any information technology purchased in whole or in part with WtW funds, which is used for a period of time that goes beyond December 31, 1999, must be ''year 2000 compliant.'' This means that such information technology shall accurately process date/time data (including, but not limited to, calculating, comparing and sequencing) from, into and between the twentieth and twenty-first centuries, the years 1999 and 2000, and leap year calculations. Furthermore, ''year 2000 compliant'' information technology, when used in combination with other information technology, shall accurately process date/time data if the other information technology properly exchanges date/time with it.

Assurances and Certifications

The following assurances and certifications must be included as part of each grant application: Debarment & Suspension Certification.

Other assurances and certifications will be required as part of each executed grant agreement, but do not need to be submitted as part of a WtW Competitive grant application: Assurances/Non-Construction Programs; Certification Regarding Lobbying; Drug Free Workplace Certification; Certification of Non-delinquency; and Non-discrimination and Equal Opportunity Requirements.

Departmental Oversight

The Department reserves the right to conduct oversight and both programmatic and financial monitoring activities for all competitive grants awarded under the WtW grants program, including the WTW Census 2000 Employment Project.

VI. Monitoring and Reporting

Monitoring

The Department shall be responsible for ensuring effective implementation of each competitive grant, including the WTW Census 2000 Employment Project, in accordance with the Act, the Regulations, the provisions of this announcement and the negotiated grant agreement. Applicants should assume that at least one on-site project review will be conducted by Department staff, or their designees, at approximately the midpoint of the project performance period. This review will focus on the project's progress in meeting the grant's programmatic goals and participant outcomes, complying with the targeting requirements regarding recipients who are served, expenditure of grant funds on allowable activities, integration with other resources and service providers in the local area, and methods for assessment of the responsiveness and effectiveness of the services being provided. The grantee may be subject to other additional reviews at the discretion of the Department.

Reporting

Applicants selected as grantees will be required to provide the following reports:

1. Financial Reporting: The Department of Labor (DOL) issued financial reporting instructions for competitive grantees on June 24, 1998. Financial reports will be submitted electronically directly to DOL.

2. Participant Reporting: Participant reporting instructions will be issued shortly covering the WtW competitive grant program. Participant reports for each competitive grant will be submitted in accordance with reporting instructions at a later date.

3. Other Reporting: The Department of Labor may negotiate additional

reporting requirements with individual grantees, where necessary, for grant management and/or knowledge development purposes, including quarterly narrative reports.

In addition to required quarterly financial and participant reporting, some grantees may be asked to provide information to the appropriate ETA Grant Officer Technical Representative during the early implementation phase of the project for the purpose of project oversight. This information may include project enrollment levels, participant characteristics, and emerging implementation issues.

VII. Review and Selection of Applications for Grant Award Review Process

The Department will screen all applications to determine whether all required elements are present and clearly identifiable. These elements are described below in the ''Required Content for the WtW Census 2000 Employment Project.'' Failure to include all required elements in Section I of the grant application will result in rejection of the application.

Each complete application will be objectively rated against the criteria described in this announcement by a panel of Department of Labor and Department of Commerce staff. Applicants are advised that the panel recommendations to the Grant Officer are advisory in nature. The Grant Officer may elect to award the grant either with or without discussion with the applicant. In situations where no discussions occur, an award will be based on the applicant's signature on the SF–424 form (See Appendix B), which constitutes a binding offer.

The Grant Officer will make final award decisions based on what is most advantageous to the Government, considering factors such as: Panel findings; geographic saturation; and the availability of funds.

Criteria

The criteria, and the weights assigned to each, which will apply to the review of applications submitted in response to this announcement are:

1. ''Local Collaboration and Integration'' [25 points] which shall consider the extent to which the applicant can demonstrate that its local affiliates have strong relationships with WtW and TANF agencies, including tribal entities and WtW Competitive grants, as well as local Census Offices, in local areas across the country (up to 15 points); and the extent and quality of local community partnerships that are involved in the project (up to 10 points).

2. ''Demonstrated Capability'' [40 points] which shall consider the extent to which the applicant and its affiliates demonstrate a history of success in managing a project of the scope and complexity described herein (up to 15 points); the extent to which the applicant and its affiliates have experience in brokering services for a comparable target group (up to 12 points); and the extent to which the applicant demonstrates the ability to effectively execute grant management responsibilities, including tracking of participants in the 70/30% categories of eligibility (up to 13 points).

3. ''Outcomes'' [35 points] which shall consider the quality of the proposed strategy for attaining employment and earnings outcomes (up to 10 points); the extent to which the proposed plan of services responds to the barriers faced by proposed participants, and provides flexibility to respond to local conditions (up to 7 points); the reasonableness of the level of investment in relation to the proposed outcomes (up to 8 points); and the extent to which the applicant has a strategy for developing relationships with other Welfare-to-Work programs and with private employers to ensure long-term placements of participants (up 10 points).

Signed at Washington, D.C., this 11th day of May, 1999.

Janice E. Perry,

Chief, Division of Federal Assistance.

Required Content for WtW Census 2000 Employment Project

Each application must contain the information and follow the format outlined in this Part. In preparing your project narrative, keep in mind the selection criteria outlined above.

I. Project Summary

A. Project Financial Plan

Information provided in this section will be evaluated predominantly under the ''Outcomes'' criteria.

The financial plan shall describe all costs associated with implementing the project that are to be covered with grant funds. All costs should be necessary and reasonable according to the Federal guidelines set forth in the ''Grants and Agreements with Institutes of Higher Education, Hospitals and Other Non-Profit Organizations'' (also known as OMB Circular A–110), codified at 29 CFR Part 95.

The financial plan must contain the following parts:

* ''Application for Federal Assistance'' and ''Budget Information Sheet'' by line item for all costs required to implement the project design effectively. Submission of these two completed forms is required. (See Appendix B for these required forms.)

Note: Although there is no matching requirement for this grant, the Department strongly encourages the leveraging of financial and other resources in the implementation of WtW competitive grant projects. These resources will not, however, be recorded on the Budget Information Sheet (Appendix B).

* Budget narrative/justification which provides sufficient information to support the reasonableness of the costs included in the budget in relation to the service strategy and planned outcomes.

B. Executive Summary

Each application must provide a two-page executive summary of the grant proposal, describing the nature of the services typically provided by applicant's local affiliates, the proposed service strategy, the qualifications of the applicant to implement a nationwide project, other significant service organizations involved in the delivery of services, and the most innovative elements of the proposal. This section must be no more than two single-spaced, single-sided pages.

C. Evidence of Required Local and State Consultation

It is the expectation of the Department that, to the extent possible, all applications will be developed in consultation with a substantial majority of PICs/political subdivisions and Governors across the country. The WtW Census 2000 Employment Project should complement the WtW formula and competitive grant activity at a local level, rather than exist independent of, or in conflict with, those programs.

Each application must include the signed certification of the required consultation with the Governor, or of evidence of efforts to consult, as described in this announcement. Applications must also include the signed certification from each PIC(s) or political subdivision(s) or other evidence indicating the efforts undertaken to obtain the required consultation as described in this announcement. In areas where an entity other than the PIC has been designated by the Governor and approved by the Secretary to administer the WtW formula grant, the applicant should also include evidence of consultation and/or support from that entity. All certifications or comments provided as part of this requirement must be included in this section of the grant application and will not be counted against the established page limits. A

sample format for State and local certifications can be found in Appendix C that applicants may choose to use. All certifications must be dated prior to July 16, 1999.

Applicants must submit a list of all State and local entities from whom they have obtained certification of coordination. Applicants will maintain copies of all certifications in their own files. Although an important part of their application, certifications need not be submitted to DOL. For those applicants that are deemed to be competitive, DOL will verify that certifications are on file and that they are dated prior to the closing date of the SGA.

II. Government Requirement/Statement of Work—Project Narrative

This section of the application should not exceed 15 single-spaced, numbered pages. The application should include information of the type described below, as appropriate.

Description of Applicant's Service Delivery System

Information provided in this section will be evaluated predominantly under the ''Demonstrated Capability'' criteria.

—Describe the nature of programs operated, services provided and outcomes obtained by local affiliates nationwide. In addition, please provide a map indicating which State and local areas are served by local affiliates.
—Identify with what types of organizations local affiliates typically coordinate activities and services.
—Describe organizational experience in serving welfare recipients, including hard-to-employ recipients and noncustodial parents, and implementing welfare reform programs. In addition, please describe any specific Welfare-to-Work programs that your organization or local affiliates are operating or where you are providing services through a contract or subgrant.
—Describe your experience in working with Private Industry Councils or providing employment and training programs. Explain any situations in which your organization provided services for individuals who were simultaneously enrolled in more than one Federal program (e.g. AFDC/TANF and JTPA).

Recruitment and Intake of Target Group

Information provided in this section will be evaluated predominantly under the ''Local Collaboration and Integration'' and ''Outcomes'' criteria.

—Describe your organization's experience in assessing individual barriers to employment, and the population typically served by your organization and its affiliates, including the barriers that your programs and services address.
—Describe how your organization normally recruits individuals to participate in your program, including other specific organizations or types of organizations and agencies (such as housing authorities, welfare agencies, workforce development agencies, child support enforcement agencies, etc.) that might assist you with referrals.

Employer Recruitment Strategies

Information provided in this section will be evaluated predominantly under the ''Outcomes'' criteria.

—Describe the types of relationships that your organization has maintained with employers both at a national level and at a local level (e.g. associations that you work with at the national level, as well as types of organizations that local affiliates tend to work with regularly).
—Identify the types of occupations in the local area which are likely to be targeted as appropriate employment opportunities for the target group of this project following their temporary employment with Census 2000. Include a brief justification for the selection of the occupations in terms of their availability and demand and the adequacy of expected placement wage and post-placement earnings potential to achieve self-sufficiency.
—Describe the specific responsibilities and approaches for developing relationships with and support of employers to generate a sufficient number of unsubsidized employment opportunities for the target group. Specifically describe how employers will be encouraged to customize employment opportunities to meet work-related needs (e.g., child care, flexible work schedules) of recipients.

Service Strategy

Information provided in this section will be evaluated predominantly under the ''Local Collaboration and Integration'' and ''Outcomes'' criteria.

—Identify the specific job readiness, placement (in both subsidized and unsubsidized employment), post-employment, job retention and/or support services to be provided with WtW Census 2000 Employment Project grant funds as well as resources and services to be leveraged from other sources.
—Describe the rationale for planned activities in terms of the timing of Census 2000 employment, employment barriers faced by participants, and likely occupations described above.
—Describe what individual support services, such as mentoring and case management, will be used to maintain participants in the employment once placed in their post-Census job.
—Describe what services will be provided or referrals made for eligible WtW participants who are not hired by Census.
—Describe how longer-term supportive services and follow-up services will be provided after the end of the grant.

Note: It is assumed that job retention and supportive services provided through the WtW Census Employment Project grant will be of relatively short duration. Applicants are encouraged to describe in detail what arrangements they have made with other WtW grantees at the local level to provide longer-term supportive services and follow-up for WtW Census Employment Project participants.

Service Process

Information provided in this section will be evaluated predominantly under the ''Local Collaboration and Integration'' and ''Outcomes'' criteria.

—Describe the comprehensive service process that will be available to participants, and identify the organizations which will be involved in providing specific services/activities. [A process flowchart and/or service matrix may be used to provide this description.] The description should specify what elements of the service strategy are already available in the community, as well as the elements or services that will be funded through the WtW competitive grant award. At a minimum, describe the coordination and contributions of WtW formula and competitive grants (including tribal entities), JTPA service providers, TANF providers, child support enforcement agencies and housing authorities.
—Describe the specific methods which will be used by the grantee and the local TANF agency to coordinate and work jointly in providing the following services: Outreach, recruitment, and referral of appropriate recipients for assistance through the project; assessment of skills and identification of specific employment barriers; counseling and case management; and support services.
—Describe what mechanism(s) the project will use to ensure that long term job retention and supportive

services are made available to participants after the end of the WtW Census 2000 Employment Project grant.

Planned Outcomes

Information provided in this section will be evaluated predominantly under the ''Outcomes'' criteria.

—Identify and justify planned performance for the comprehensive service strategy on the following measures: Number of participants to be placed into unsubsidized employment; average earnings at placement in post-Census unsubsidized employment; expected average earnings one year after placement in unsubsidized employment; and cost per placement in unsubsidized employment. In addition, describe specific process or outcome objectives for those services.

The application may include other measures and planned performance levels as deemed appropriate by the applicant, such as measures of the quality of post-Census project job placements, including employee benefits and advancement opportunities. If these are included, the applicant should briefly describe their relevance to the project.

Implementation Plan

Information provided in this section will be evaluated predominantly under the ''Outcomes'' criteria.

—Identify the critical activities, time frames and responsibilities for effectively implementing the project within the first 90 days after the award of the grant. Note that project should plan to start on October 1, 1999 and that Census employment should begin in mid-April, 2000.

—Include an implementation schedule showing the number of participants, enrollments in Census jobs and other allowable activities, placements in unsubsidized employment and terminations.

Project Management Plan

Information provided in this section will be evaluated predominantly under the ''Demonstrated Capability'' criteria.

Applicants must be able to document that they have systems capable of satisfying the administrative and grant management requirements for WtW grants as defined in 20 CFR Part 645.

—Include a project organizational chart which identifies the staff with key management responsibilities and the specific responsibilities of each. Also describe the relationship between the national organization and the local affiliates and mechanisms used for communication and technical assistance.

—Describe the specific experience of the applicant in managing a project of this geographical scope and limited time frame. The information should include at a minimum specific projects or grants, a comparison of the characteristics of individuals served to the target group for this project, and the outcomes which were achieved. In addition, applicants should provide the names and addresses of their last three grantors, public and/or private, from which applicants received funding. The Department of Labor reserves the right to contact any or all of these funding organizations or to request additional information from the applicant regarding past performance as part of a responsibility review process, or if the Department is concerned about the applicants' financial responsibility or capability to manage grant funds.

—Describe how current or former welfare recipients will be used to in the provision of services.

Appendix A: Definitions of Key Terms

Private Entity—Any organization, public or private, which is neither a PIC nor a political subdivision of a State.

Private Industry Council (PIC)—from Sec. 645.120 of the WtW Regulations—A Private Industry Council established under Section 102 of the Job Training Partnership Act, which performs the functions authorized at Section 103 of the JTPA, including their successor entities under the Workforce Investment Act.

Political Subdivision—A unit of general purpose local government, as provided for in State laws and/or Constitution, which has the power to levy taxes and spend funds and which also has general corporate and police powers.

Appendix B: Required Forms

(1) Application for Federal Assistance (Standard Form 424).

(2) Budget Information Sheet.

BILLING CODE 4510–30–P

APPLICATION FOR FEDERAL ASSISTANCE

OMB Approval No. 0348-0043

1. TYPE OF SUBMISSION: Application ☐ Construction ☐ Non-Construction / Preapplication ☐ Construction ☐ Non-Construction	2. DATE SUBMITTED	Applicant Identifier
	3. DATE RECEIVED BY STATE	State Application Identifier
	4. DATE RECEIVED BY FEDERAL AGENCY	Federal Identifier

5. APPLICANT INFORMATION

Legal Name:	Organizational Unit:
Address (give city, county, State and zip code):	Name and telephone number of the person to be contacted on matters involving this application (give area code):

6. EMPLOYER IDENTIFICATION NUMBER (EIN):

☐☐-☐☐☐☐☐☐☐

7. TYPE OF APPLICANT: (enter appropriate letter in box) ☐

A. State
B. County
C. Municipal
D. Township
E. Interstate
F. Intermunicipal
G. Special District
H. Independent School Dist.
I. State Controlled Institution of Higher Learning
J. Private University
K. Indian Tribe
L. Individual
M. Profit Organization
N. Other (Specify): _____

8. TYPE OF APPLICATION:
☐ New ☐ Continuation ☐ Revision

If Revision, enter appropriate letter(s) in box(es): ☐ ☐

A. Increase Award B. Decrease Award C. Increase Duration
D. Decrease Duration Other (specify):

_____

9. NAME OF FEDERAL AGENCY:

10. CATALOG OF FEDERAL DOMESTIC ASSISTANCE NUMBER:

☐☐-☐☐☐

TITLE:

11. DESCRIPTIVE TITLE OF APPLICANT'S PROJECT:

12. AREAS AFFECTED BY PROJECT (cities, counties, States, etc.):

13. PROPOSED PROJECT:		14. CONGRESSIONAL DISTRICTS OF:	
Start Date	Ending Date	a. Applicant	b. Project

15. ESTIMATED FUNDING:		
a. Federal	$	.00
b. Applicant	$	.00
c. State	$	.00
d. Local	$	.00
e. Other	$	.00
f. Program Income	$	.00
g. TOTAL	$	.00

16. IS APPLICATION SUBJECT TO REVIEW BY STATE EXECUTIVE ORDER 12372 PROCESS?

a. YES. THIS PREAPPLICATION/APPLICATION WAS MADE AVAILABLE TO THE STATE EXECUTIVE ORDER 12372 PROCESS FOR REVIEW ON

DATE _____

b. NO. ☐ PROGRAM IS NOT COVERED BY E.O. 12372

☐ OR PROGRAM HAS NOT BEEN SELECTED BY STATE FOR REVIEW

17. IS THE APPLICANT DELINQUENT ON ANY FEDERAL DEBT?

☐ Yes If "Yes," attach an explanation. ☐ No

18. TO THE BEST OF MY KNOWLEDGE AND BELIEF, ALL DATA IN THIS APPLICATION/PREAPPLICATION ARE TRUE AND CORRECT. THE DOCUMENT HAS BEEN DULY AUTHORIZED BY THE GOVERNING BODY OF THE APPLICANT AND THE APPLICANT WILL COMPLY WITH THE ATTACHED ASSURANCES IF THE ASSISTANCE IS AWARDED.

a. Typed Name of Authorized Representative	b. Title	c. Telephone number
d. Signature of Authorized Representative		e. Date Signed

Previous Editions Not Usable

Standard Form 424 (REV 4-88)
Prescribed by OMB Circular A-102

Authorized for Local Reproduction

WELFARE-TO-WORK CENSUS 2000 EMPLOYMENT PROJECT GRANT

PART II - BUDGET INFORMATION

SECTION A - Budget Summary by Categories

	(A)	(B)	(C)
1. Personnel			
2. Fringe Benefits (Rate %)			
3. Travel			
4. Equipment			
5. Supplies			
6. Contractual			
7. Other			
8. Total, Direct Cost (Lines 1 through 7)			
9. Indirect Cost (Rate %)			
10. Participant Wages			
11. TOTAL Funds Requested (Lines 8 through 10)			

NOTE: Use Column A to record funds requested for the initial period of performance (i.e. 12 months, 18 months, etc.); Column B to record changes to Column A (i.e. requests for additional funds or line item changes; and Column C to record the totals (A plus B).

WELFARE-TO-WORK COMPETITIVE GRANTS

INSTRUCTIONS FOR PART II - BUDGET INFORMATION

SECTION A - Budget Summary by Categories

1. ***Personnel:*** *Show salaries to be paid for project personnel.*

2. ***Fringe Benefits:*** *Indicate the rate and amount of fringe benefits.*

3. ***Travel:*** *Indicate the amount requested for staff travel. Include funds to cover at least one trip to Washington, DC for project director or designee.*

4. ***Equipment:*** *Indicate the cost of non-expendable personal property that has a useful life of more than one year with a per unit cost of $5,000 or more.*

5. ***Supplies:*** *Include the cost of consumable supplies and materials to be used during the project period.*

6. ***Contractual:*** *Show the amount to be used for (1) procurement contracts (except those which belong on other lines such as supplies and equipment); and (2) sub-contracts/grants.*

7. ***Other:*** *Indicate all direct costs not clearly covered by lines 1 through 6 above, including consultants.*

8. ***Total, Direct Costs:*** *Add lines 1 through 7.*

9. ***Indirect Costs:*** *Indicate the rate and amount of indirect costs. Please include a copy of your negotiated Indirect Cost Agreement.*

10. ***Participant Wages:*** *Include any wages paid to participants or employers for work experience, OJT, job creation, community service work or any other subsidized employment activity.*

11. ***Total Federal funds Requested:*** *Show total of lines 8 through 10.*

NOTE: PLEASE INCLUDE A DETAILED COST ANALYSIS OF EACH LINE ITEM.

Certification Format

U.S. DEPARTMENT OF LABOR
Employment and Training Administration

OMB No. 1205-0402
Expires: 011/30/99

Welfare-to-Work
Census 2000 Employment Project

This form is to indicate concurrence and support of a proposal from

_____
(Name of Applicant for Census 2000 Employment Project)
to implement the WtW Census 2000 Employment Project in the geographic area served by my organization.

Organization name _____
(State Agency, Political Subdivision, PIC)

Address _____

Check All that Apply:

❒ I certify that I am familiar with the applicant and the services they provide in my jurisdiction;

❒ I certify that I am willing to coordinate participant services with the applicant in relation to the WtW Census 2000 Employment Project;

❒ I certify that the applicant has consulted with my organization during the development of the application;

❒ I certify that the activities proposed in the application are consistent with, and will be coordinated with, the WtW efforts of the PIC(s)/political subdivision(s).

Signature: _____ Date:_____

Name and Title: _____

Persons are not required to respond to this collection of information unless it displays a current valid OMB control number. Respondents obligation to reply to these reporting requirements are required to obtain or retain benefits (20 CFR 645). Public reporting burden for this collection of information is estimated to average 20 hours per response for the preparation of the application proposal, including time for reviewing instructions, searching existing data sources, gathering and maintaining the data needed, and completing and reviewing the collection of information, plus up to an additional 80 hours to meet the consultation requirements. Send comments regarding this burden estimate or any other aspect of this collection of information, including suggestions for reducing this burden, to the US Department of Labor, Office of Welfare-to-Work, Room C-4524, Washington, D.C. 20210 (Paperwork Reduction Project 1205-0402).

[FR Doc. 99–12225 Filed 5–13–99; 8:45 am]
BILLING CODE 4510–30–C

DEPARTMENT OF LABOR

Employment and Training Administration

Job Training Partnership Act, Workforce Investment Act, and Work Opportunity Tax Credit; Lower Living Standard Income Level

AGENCY: Employment and Training Administration, Labor.

ACTION: Notice of determination of lower living standard income level.

SUMMARY: The Lower Living Standard Income Level (LLSIL) is a value used in a number of Federal programs, including the Job Training Partnership Act (JTPA), the Workforce Investment Act (WIA), and the Work Opportunity Tax Credit (WOTC). The JTPA provides that the term ''economically disadvantaged'' may be defined as 70 percent of the LLSIL. The WIA provides that the terms ''low-income individual'' and ''disadvantaged adult'' may be defined as a member of a family that received a total family income, that, in relation to family size, does not exceed 70 percent of the LLSIL. In addition, while the WIA provides that State Boards and Local Boards must set the criteria for determining whether employment leads to self-sufficiency, at a minimum, such criteria must provide that self-sufficiency means employment that pays at least 100 percent of the LLSIL. To provide the most accurate data possible, the Department of Labor is issuing revised figures for the LLSIL. The Internal Revenue Code also provides that the term ''economically disadvantaged'' may be defined as 70 percent of the LLSIL for purposes of the WOTC.

EFFECTIVE DATE: This notice is effective on May 14, 1999.

ADDRESSES: Send written comments to: Mr. Ron Putz, Office of Employment and Training Programs, Employment and Training Administration, Department of Labor, Room N–4469, 200 Constitution Avenue, NW, Washington, DC 20210.

FOR FURTHER INFORMATION CONTACT: Mr. Ron Putz, telephone: 202–219–5229, x173; Fax: (202) 219–7190 (these are not toll free numbers).

SUPPLEMENTARY INFORMATION: It is a purpose of the JTPA ''to establish programs to prepare youth and adults facing serious barriers to employment for participation in the labor force by providing job training and other services that will result in increased employment and earnings, increased educational and occupational skills, and decreased welfare dependency, thereby improving the quality of the work force and enhancing the productivity and competitiveness of the Nation,'' JTPA section 2 and 20 CFR 626.1. JTPA section 4(8) defines, for the purposes of JTPA eligibility, the term ''economically disadvantaged'' in part by reference to the LLSIL.

The WIA, Pub. L. 105–220—August 7, 1998, which will be implemented between July 1, 1999 and July 1, 2000, as a replacement to JTPA, continues the use of the LLSIL standard in determining low income. WIA, section 101(25), defines the term ''low income individual'' for the purposes of WIA eligibility. In section 132(b)(1)(B)(v)(IV) defines the term ''disadvantaged adult'' in part by reference to the LLSIL. In addition, for purposes of adult eligibility, the WIA Interim Final Regulations, section 663.230, requires that the State Boards and Local Boards establish their own criteria for ''self sufficiency'' that, at a minimum, means employment that pays at least the LLSIL.

The LLSIL figures published in this notice shall be used to determine whether an individual is economically disadvantaged for JTPA. JTPA section 4(16) defines the LLSIL as that income level (adjusted for regional, metropolitan, urban, and rural differences and family size) determined annually by the Secretary [of Labor] based on the most recent ''lower living family budget'' issued by the Secretary. WIA, at section 101(24), directly incorporates the JTPA definition of LLSIL, and contains the specific applications as noted above.

Section 51 of the Internal Revenue Code (I.R.C.) established the WOTC for a portion of the wages paid by employers from ''targeted'' groups. The LLSIL figures published in this notice shall be used to determine whether an individual is a member of one of the targeted groups for applicable WOTC purposes. The period for a WOTC tax credit expires on June 30, 1999.

The most recent lower living family budget was issued by the Secretary of Labor in the Fall of 1981. Using those data, the 1981 LLSIL was determined for programs under the now-repealed Comprehensive Employment and Training Act, and for the WOTC. The four-person urban family budget estimates previously published by the Bureau of Labor Statistics (BLS) provided the basis for the Secretary to determine the LLSIL for training and employment program operators. BLS terminated the four-person family budget series in 1982, after publication of the Fall 1981 estimates.

Under JTPA, the Employment and Training Administration (ETA) published the 1998 updates to the LLSIL in the **Federal Register** of May 6, 1998, 63 FR 25086. ETA has again updated the LLSIL to reflect cost of living increases for 1998 by applying the percentage change in the December 1998 Consumer Price Index for All Urban Consumers (CPI-U), compared with the December 1997 CPI-U, to each of the May 6, 1998, LLSIL figures. Those updated figures for a family of four are listed in Table 1 below by region for both metropolitan and nonmetropolitan areas. Since eligibility is determined by family income at 70 percent of the LLSIL, pursuant to section 4(8) of JTPA, and since section 132(b)(1)(B)(v)(IV) of WIA uses the 70 percent values in defining economically disadvantaged, those figures are listed below as well.

Jurisdictions included in the various regions, based generally on Census Divisions of the U.S. Department of Commerce, are as follows:

Northeast

Connecticut
Maine
Massachusetts
New Hampshire
New Jersey
New York
Pennsylvania
Rhode Island
Vermont
Virgin Islands

Midwest

Illinois
Indiana
Iowa
Kansas
Michigan
Minnesota
Missouri
Nebraska
North Dakota
Ohio
South Dakota
Wisconsin

South

Alabama
American Samoa
Arkansas
Delaware
District of Columbia
Florida
Georgia
Northern Marianas
Oklahoma
Palau
Puerto Rico
South Carolina
Kentucky
Louisiana
Marshall Islands
Maryland
Mississippi
Micronesia
North Carolina
Tennessee

Texas
Virginia
West Virginia

West

Arizona
California
Colorado
Idaho
Montana
Nevada
New Mexico
Oregon
Utah
Washington
Wyoming

Additionally, separate figures have been provided for Alaska, Hawaii, and Guam as indicated in Table 2 below.

For Alaska, Hawaii, and Guam, the 1999 figures were updated from the May 6, 1998 ''State Index'' based on the ratio of the urban change in the State (using Anchorage for Alaska and Honolulu for Hawaii and Guam) compared to the West regional metropolitan change, and then applying that index to the West regional metropolitan change.

Data on 23 selected Metropolitan Statistical Areas (MSAs) are also available. These are based on semiannual CPI–U changes for a 12-month period ending in December 1998. The updated LLSIL figures for these MSAs, and 70 percent of the LLSIL, rounded to the next highest ten, are reported in Table 3 below.

Table 4 below lists various figures at 70 percent of the updated 1999 LLSIL for family sizes of one to six persons. For families larger than six persons, an amount equal to the difference between the six-person and the five-person family income levels should be added to the six-person family income level for each additional person in the family. Where the poverty level for a particular family size is greater than the corresponding LLSIL figure, the figure is indicated in parentheses.

Section 4(8) of JTPA defines ''economically disadvantaged'', section 101(25) of WIA defines ''low-income individual'' and section 132(a)(1)(B)(v)(IV) of WIA defines ''disadvantaged adult'' as, among other things, an individual whose family income was not in excess of the higher of the Department of Health and Human Services (HHS) poverty level or 70 percent of the LLSIL. HHS published the annual update of the poverty-level guidelines at 64 FR 13428 (March 18, 1999). The HHS poverty level guidelines may be found on the Internet at http://aspe.hhs.gov/poverty/99poverty.htm.

Use of These Data

Based on these data, Governors should provide the appropriate figures to service delivery areas (SDAs), State Employment Security Agencies, and employers in their States to use in determining eligibility for JTPA and WOTC. State and Local Workforce Investment Boards should ensure that their minimum standard for self-sufficiency and related uses, is at least the appropriate LLSIL figure. The Governor should designate the appropriate LLSILs for use within the State from Tables 1 through 3. Table 4 may be used with any of the levels designated.

Information may be provided by disseminating information on Metropolitan Statistical Areas (MSAs) and metropolitan and nonmetropolitan areas within the State, or it may involve further calculations. For example, the State of New Jersey may have four or more figures: metropolitan, nonmetropolitan, for portions of the State in the New York City MSA, and for those in the Philadelphia MSA. If an SDA under JTPA or a Workforce Development Area under WIA includes areas that would be covered by more than one figure, the Governor may determine which is to be used. Pursuant to the JTPA regulations at 20 CFR 627.200, guidelines, interpretations, and definitions adopted by the Governor shall be accepted by the Secretary to the extent that they are consistent with the JTPA, and the JTPA regulations. Pursuant to WIA section 112(c) and Interim Final Rule at 20 CFR Part 652, section 661.220, a State Plan, which contains the State's vision, goals, strategies, policies and measures for the workforce investment system shall be accepted by the Secretary to the extent that they are consistent with the WIA and the WIA regulations.

Disclaimer on Statistical Uses

It should be noted that the publication of these figures is only for the purpose of determining eligibility for applicable JTPA and WOTC programs and for WIA as defined in the law and regulations. BLS has not revised the lower living family budget since 1981, and has no plans to do so. The four-person urban family budget estimates series has been terminated. The CPI–U adjustments used to update the LLSIL for this publication are not precisely comparable, most notably because certain tax items were included in the 1981 LLSIL, but are not in the CPI–U.

Thus, these figures should not be used for any statistical purposes, and are valid only for eligibility determination for purposes under the JTPA and WOTC programs, and for WIA as defined in the law and regulations.

Signed at Washington, DC, this 7th day of May, 1999.

Shirley M. Smith,

Administrator, Office of Work-Based Learning.

BILLING CODE 451–30–P

Appendix—Table 1 Through Table 4

Table 1 -- Lower Living Standard Income Level By Region [1]
(FAMILY OF FOUR

Region	1999 Adjusted LLSIL	70 percent LLSIL
Northeast		
Metro	28,670	20,070
Non-Metro	28,320	19,830
Midwest		
Metro	26,580	18,610
Non-Metro	25,150	17,610
South		
Metro	25,140	17,600
Non-Metro	24,050	16,830
West		
Metro	28,270	19,790
Non-Metro [2]	27,770	19,440

[1] For ease of calculation, these figures have been rounded to the next ten dollars.

[2] Non metropolitan area percent changes for the West region are unpublished data.

Table 2 -- Lower Living Standard Income Level -- Alaska, Hawaii and Guam[1]
(FAMILY OF FOUR)

Region	1999 Adjusted LLSIL	70 percent LLSIL
Alaska:		
Metro	35,820	25,080
Non-Metro	34,860	24,410
Hawaii-Guam:		
Metro	37,290	26,110
Non-Metro	37,220	26,060

[1] Rounded to the next ten dollars.

Table 3 -- Lower Living Standard Income Level -- 23 MSAs [1]
(FAMILY OF FOUR)

Region MSA	1999 Adjusted LLSIL	70 percent LLSIL
Anchorage, AK	35,820	25,080
Atlanta, GA	25,250	17,680
Boston-Brockton-Nashua, MA-NH-ME-CT	30,420	21,300
Chicago-Gary-Kenosha, IL-IN-WI	27,980	19,590
Cincinnati-Hamilton, OH-KY-IN	26,620	18,640
Cleveland-Akron, OH	27,730	19,420
Dallas-Ft Worth, TX	23,920	16,750
Denver-Boulder-Greeley, CO	27,910	19,540
Detroit-Ann Arbor-Flint, MI	25,820	18,080
Honolulu, HI	37,290	26,110
Houston-Galveston-Brazoria, TX	23,340	16,340
Kansas City, MO-KS	25,800	18,070
Los Angeles-Riverside-Orange County, CA	28,630	20,050
Milwaukee-Racine, WI	26,890	18,830
Minneapolis-St Paul, MN-WI	26,130	18,300
New York-Northern New Jersey-Long Island, NY-NJ-CT-PA	29,950	20,970
Philadelphia-Wilmington-Atlantic City, PA-NJ-DE-MD	27,890	19,530
Pittsburgh, PA	26,860	18,810
St Louis, MO-IL	25,490	17,850
San Diego, CA	29,240	20,470
San Francisco-Oakland-San Jose, CA	29,690	20,790
Seattle-Tacoma-Bremerton, WA	31,010	21,710
Washington-Baltimore, DC-MD-VA-WV [2]	30,320	21,230

[1] Rounded to the next ten dollars.

[2] Baltimore and Washington, D.C. are now calculated as a single metropolitan area.

Table 4--SEVENTY PERCENT OF UPDATED 1999 LLSIL, BY FAMILY SIZE [1]

Family of One	Two	Three	Four	Five	Six
(5,890)	(9,650)	(13,240)	(16,340)	(19,290)	22,550
(6,030)	(9,890)	(13,570)	16,750	19,770	23,120
(6,060)	(9,930)	(13,640)	16,830	19,860	23,230
(6,340)	(10,390)	14,260	17,600	20,770	24,290
(6,340)	(10,390)	14,270	17,610	20,780	24,310
(6,370)	(10,440)	14,330	17,680	20,870	24,400
(6,430)	(10,540)	14,460	17,850	21,070	24,640
(6,510)	(10,670)	14,640	18,070	21,330	24,940
(6,510)	(10,670)	14,650	18,080	21,340	24,950
(6,590)	(10,800)	14,830	18,300	21,600	25,260
(6,700)	(10,980)	15,080	18,610	21,960	25,690
(6,710)	(11,000)	15,100	18,640	22,000	25,730
(6,780)	11,100	15,240	18,810	22,200	25,960
(6,780)	11,110	15,260	18,830	22,220	25,990
(7,000)	11,460	15,730	19,420	22,920	26,800
(7,000)	11,470	15,750	19,440	22,940	26,830
(7,040)	11,530	15,820	19,530	23,050	26,960
(7,040)	11,530	15,830	19,540	23,060	26,970
(7,060)	11,560	15,870	19,590	23,120	27,040
(7,130)	11,680	16,030	19,790	23,360	27,310
(7,140)	11,700	16,070	19,830	23,400	27,370
(7,220)	11,830	16,250	20,050	23,660	27,670
(7,230)	11,850	16,260	20,070	23,690	27,700
(7,370)	12,080	16,590	20,470	24,160	28,250
(7,490)	12,270	16,840	20,790	24,540	28,690
(7,550)	12,380	16,990	20,970	24,750	28,940
(7,650)	12,530	17,200	21,230	25,060	29,300
(7,670)	12,570	17,260	21,300	25,140	29,400
(7,820)	12,810	17,590	21,710	25,620	29,960
8,790	14,410	19,780	24,410	28,810	33,690
9,030	14,800	20,320	25,080	29,600	34,610
9,390	15,380	21,110	26,060	30,760	35,970
9,400	15,410	21,150	26,110	30,810	36,040

[1] Figures provided in Tables 1-3 of this notice are for a family of four persons. To use Table 4, the appropriate figure should be found in the Family of Four column. Then one may read across the row for family sizes other than four in the appropriate colum

[FR Doc. 99–12217 Filed 5–13–99; 8:45 am]
BILLING CODE 4510–30–C

DEPARTMENT OF LABOR

Employment Standards Administration

Wage and Hour Division

Minimum Wages for Federal and Federally Assisted Construction; General Wage Determination Decisions

General wage determination decisions of the Secretary of Labor are issued in accordance with applicable law and are based on the information obtained by the Department of Labor from its study of local wage conditions and data made available from other sources. They specify the basic hourly wage rates and fringe benefits which are determined to be prevailing for the described classes of laborers and mechanics employed on construction projects of a similar character and in the localities specified herein.

The determination in these decisions of prevailing rates and fringe benefits have been made in accordance with 29 CFR Part 1, by authority of the Secretary of Labor pursuant to the provisions of the Davis-Bacon Act of March 3, 1931, as amended (46 Stat. 1494, as amended, 40 U.S.C. 276a) and of other Federal statutes referred to in 29 CFR Part 1, Appendix, as well as such additional statutes as may from time to time be enacted containing provisions for the payment of wages determined to be prevailing by the Secretary of Labor in accordance with the Davis-Bacon Act. The prevailing rates and fringe benefits determined in these decisions shall, in accordance with the provisions of the foregoing statutes, constitute the minimum wages payable on Federal and federally assisted construction projects to laborers and mechanics of the specified classes engaged on contract work of the character and in the localities described therein.

Good cause is hereby found for not utilizing notice and public comment procedure thereon prior to the issuance of these determinations as prescribed in 5 U.S.C. 553 and not providing for delay in the effective date as prescribed in that section, because the necessity to issue current construction industry wage determinations frequently and in large volume causes procedures to be impractical and contrary to the public interest.

General wage determination decisions, and modifications and supersedes decisions thereto, contain no expiration dates and are effective from their date of notice in the **Federal Register**, or on the date written notice is received by the agency, whichever is earlier. These decisions are to be used in accordance with the provisions of 29 CFR Parts 1 and 5. Accordingly, the applicable decision, together with any modifications issued, must be made a part of every contract for performance of the described work within the geographic area indicated as required by an applicable Federal prevailing wage law and 29 CFR Part 5. The wage rates and fringe benefits, notice of which is published herein, and which are contained in the Government Printing Office (GPO) document entitled ''General Wage Determinations Issued Under The Davis-Bacon And Related Acts,'' shall be the minimum paid by contractors and subcontractors to laborers and mechanics.

Any person, organization, or governmental agency having an interest in the rates determined as prevailing is encouraged to submit wage rate and fringe benefit information for consideration by the Department. Further information and self-explanatory forms for the purpose of submitting this data may be obtained by writing to the U.S. Department of Labor, Employment Standards Administration, Wage and Hour Division, Division of Wage Determinations, 200 Constitution Avenue, N.W., Room S–3014, Washington, D.C. 20210.

Withdrawn General Wage Determination Decision

This is to advise all interested parties that the Department of Labor is withdrawing, from the date of this notice, General Wage Determination Nos. MN990044, MN990046, MN990047, MN990051, MN990053, MN990054, MN990056 and MN990057 dated March 12, 1999.

Contracts for which bids have been opened shall not be affected by this notice. Also, consistent with 29 CFR 1.6¢ 2 (I) (A), when opening of bids is less than ten (10) days from the date of this notice, this action shall be effective unless agency finds that there is insufficient time to notify bidders of the change and the finding is documented in contract file.

New General Wage Determination Decisions

The number of the decisions added to the Government Printing Office document entitled ''General Wage Determinations Issued Under the Davis-Bacon and related Acts'' are listed by Volume and States: MN990062, MN990063, MN990064, MN990065, MN990066, MN990067, MN990068, MN990069, MN990070, MN990071, MN990071, MN990072 and MN990073.

Modifications to General Wage Determination Decisions

The number of decisions listed in the Government Printing Office document entitled ''General Wage Determinations Issued Under the Davis-Bacon and Related Acts'' being modified are listed by Volume and State. Dates of publication in the **Federal Register** are in parentheses following the decisions being modified.

Volume I

Massachusetts
MA990001 (Mar. 12, 1999)
MA990003 (Mar. 12, 1999)
MA990005 (Mar. 12, 1999)
MA990007 (Mar. 12, 1999)
MA990008 (Mar. 12, 1999)
MA990009 (Mar. 12, 1999)
MA990010 (Mar. 12, 1999)
MA990012 (Mar. 12, 1999)
MA990013 (Mar. 12, 1999)
MA990017 (Mar. 12, 1999)
MA990018 (Mar. 12, 1999)
MA990019 (Mar. 12, 1999)
MA990020 (Mar. 12, 1999)
MA990021 (Mar. 12, 1999)

New Jersey
NJ990002 (Mar. 12, 1999)
NJ990003 (Mar. 12, 1999)
NJ990004 (Mar. 12, 1999)
NJ990007 (Mar. 12, 1999)

Rhode Island
RI990001 (Mar. 12, 1999)
RI990002 (Mar. 12, 1999)
RI990003 (Mar. 12, 1999)

Volume II

Virginia
VA990004 (Mar. 12, 1999)
VA990009 (Mar. 12, 1999)

Volume III

Kentucky
KY990001 (Mar. 12, 1999)
KY990002 (Mar. 12, 1999)
KY990003 (Mar. 12, 1999)
KY990004 (Mar. 12, 1999)
KY990007 (Mar. 12, 1999)
KY990025 (Mar. 12, 1999)
KY990027 (Mar. 12, 1999)
KY990028 (Mar. 12, 1999)
KY990029 (Mar. 12, 1999)
KY990035 (Mar. 12, 1999)
KY990044 (Mar. 12, 1999)

Volume IV

Illinois
IL990001 (Mar. 12, 1999)
IL990002 (Mar. 12, 1999)
IL990003 (Mar. 12, 1999)
IL990005 (Mar. 12, 1999)
IL990008 (Mar. 12, 1999)
IL990009 (Mar. 12, 1999)
IL990011 (Mar. 12, 1999)
IL990012 (Mar. 12, 1999)
IL990013 (Mar. 12, 1999)
IL990014 (Mar. 12, 1999)
IL990015 (Mar. 12, 1999)
IL990016 (Mar. 12, 1999)
IL990020 (Mar. 12, 1999)
IL990022 (Mar. 12, 1999)
IL990023 (Mar. 12, 1999)
IL990024 (Mar. 12, 1999)

IL990027 (Mar. 12, 1999)
IL990031 (Mar. 12, 1999)
IL990032 (Mar. 12, 1999)
IL990037 (Mar. 12, 1999)
IL990039 (Mar. 12, 1999)
IL990045 (Mar. 12, 1999)
IL990046 (Mar. 12, 1999)
IL990050 (Mar. 12, 1999)
IL990051 (Mar. 12, 1999)
IL990055 (Mar. 12, 1999)
IL990056 (Mar. 12, 1999)
IL990059 (Mar. 12, 1999)
IL990060 (Mar. 12, 1999)
IL990062 (Mar. 12, 1999)
IL990064 (Mar. 12, 1999)
IL990065 (Mar. 12, 1999)
IL990066 (Mar. 12, 1999)
IL990070 (Mar. 12, 1999)

Minnesota
MN990001 (Mar. 12, 1999)
MN990002 (Mar. 12, 1999)
MN990003 (Mar. 12, 1999)
MN990004 (Mar. 12, 1999)
MN990005 (Mar. 12, 1999)
MN90006 (Mar. 12, 1999)
MN90007 (Mar. 12, 1999)
MN90008 (Mar. 12, 1999)
MN90011 (Mar. 12, 1999)
MN90012 (Mar. 12, 1999)
MN90015 (Mar. 12, 1999)
MN90017 (Mar. 12, 1999)
MN90027 (Mar. 12, 1999)
MN90031 (Mar. 12, 1999)
MN90035 (Mar. 12, 1999)
MN90039 (Mar. 12, 1999)
MN90043 (Mar. 12, 1999)
MN90045 (Mar. 12, 1999)
MN90048 (Mar. 12, 1999)
MN90049 (Mar. 12, 1999)
MN90052 (Mar. 12, 1999)
MN90055 (Mar. 12, 1999)
MN90058 (Mar. 12, 1999)
MN90059 (Mar. 12, 1999)
MN90060 (Mar. 12, 1999)
MN90061 (Mar. 12, 1999)
MN90062 (May 14, 1999)
MN90063 (May 14, 1999)
MN90064 (May 14, 1999)
MN90065 (May 14, 1999)
MN90066 (May 14, 1999)
MN90067 (May 14, 1999)
MN90068 (May 14, 1999)
MN90069 (May 14, 1999)
MN90070 (May 14, 1999)
MN90071 (May 14, 1999)
MN90072 (May 14, 1999)
INDEX (May 14, 1999)

Ohio
OH90001 (Mar. 12, 1999)
OH90002 (Mar. 12, 1999)
OH90003 (Mar. 12, 1999)
OH90008 (Mar. 12, 1999)
OH90012 (Mar. 12, 1999)
OH90018 (Mar. 12, 1999)
OH90024 (Mar. 12, 1999)
OH90026 (Mar. 12, 1999)
OH90027 (Mar. 12, 1999)
OH90028 (Mar. 12, 1999)
OH90029 (Mar. 12, 1999)
OH90032 (Mar. 12, 1999)
OH90034 (Mar. 12, 1999)
OH90035 (Mar. 12, 1999)
OH90039 (Apr. 2, 1999)

Wisconsin
WI90010 (Mar. 12, 1999)

Volume V

Kansas
KS90012 (Mar. 12, 1999)
KS90070 (Apr. 30, 1999)

New Mexico
NM90001 (Mar. 12, 1999)
NM90005 (Mar. 12, 1999)

Texas
TX90047 (Mar. 12, 1999)
TX90048 (Mar. 12, 1999)

Volume VI

None

Volume VII

None

General Wage Determination Publication

General Wage Determination Publication

General wage determinations issued under the Davis-Bacon and related Acts, including those noted above, may be found in the Government Printing Office (GPO) document entitled ''General Wage Determinations Issued Under the Davis-Bacon and Related Acts.'' This publication is available at each of the 50 Regional Government Depository Libraries and many of the 1,400 Government Depository Libraries across the country.

The general wage determinations issued under the Davis-Bacon and related Acts are available electronically by subscription to the FedWorld Bulletin Board System of the National Technical Information Service (NTIS) of the U.S. Department of Commerce at 1–800–363–2068

Hard-copy subscriptions may be purchased from: Superintendent of Documents, U.S. Government Printing Office, Washington, D.C. 20402, (202) 512–1800.

When ordering hard-copy subscription(s), be sure to specify the State(s) of interest, since subscriptions may be ordered for any or all of the seven separate volumes, arranged by State. Subscriptions include an annual edition (issued in January or February) which includes all current general wage determinations for the States covered by each volume. Throughout the remainder of the year, regular weekly updates are distributed to subscribers.

Signed at Washington, D.C. this 10th day of May 1999.

Carl J. Poleskey,

Chief, Branch of Construction Wage Determinations.

[FR Doc. 99–12107 Filed 5–13–99; 8:45 am]

BILLING CODE 4510–27–M

DEPARTMENT OF LABOR

Mine Safety and Health Administration

Proposed Information Collection Request Submitted for Public Comment and Recommendations; Quarterly Mine Employment and Coal Production Report

ACTION: Notice.

SUMMARY: The Department of Labor, as part of its continuing effort to reduce paperwork and respondent burden conducts a preclearance consultation program to provide the general public and Federal agencies with an opportunity to comment on proposed and/or continuing collections of information in accordance with the Paperwork Reduction Act of 1995 (PRA95) [44 U.S.C. 3506(c)(2)(A)]. This program helps to ensure that requested data can be provided in the desired format, reporting burden (time and financial resources) is minimized, collection instruments are clearly understood, and the impact of collection requirements on respondents can be properly assessed.

Currently, the Mine Safety and Health Administration (MSHA) is soliciting comments concerning the proposed Quarterly Mine Employment and Coal Production Report (30 CFR 50.30, Form 7000–2).

MSHA is particularly interested in comments which:

* Evaluate whether the proposed collection of information is necessary for the proper performance of the functions of the agency, including whether the information will have practical utility;

* Evaluate the accuracy of the agency's estimate of the burden of the proposed collection of information, including the validity of the methodology and assumptions used;

* Enhance the quality, utility and clarity of the information to be collected; and

* Minimize the burden of the collection of information on those who are to respond, including through the use of appropriate automated, electronic, mechanical, or other technological collection techniques or other forms of information technology, e.g., permitting electronic submissions of responses.

A copy of the proposed information collection request can be obtained by contacting the employee listed below in the **FOR FURTHER INFORMATION CONTACT** section of this notice.

DATES: Submit comments on or before July 13, 1999.

ADDRESSES: Send comments to Theresa M. O'Malley, Chief, Records Management Branch, Program Evaluation and Information Resources, 4015 Wilson Boulevard, Room 735A, Arlington, VA 22203–1984. Commenters are encouraged to send their comments on a computer disk, or via E-mail to tomalley@msha.gov, along with an original printed copy. Mrs. O'Malley can be reached at (703) 235–1470 (voice) or (703) 235–1563 (facsimile).

FOR FURTHER INFORMATION CONTACT: Mrs. Theresa M. O'Malley, Chief, Records Management Branch, Office of Program Evaluation and Information Resources, U.S. Department of Labor, Mine Safety and Health Administration, Room 735A, 4015 Wilson Boulevard, Arlington, VA 22203–1984. Mrs. O'Malley can be reached at tomalley@msha.gov (Internet E-mail), (703) 235–1470 (voice), or (703) 235–1563 (facsimile).

SUPPLEMENTARY INFORMATION:

I. Background

The reporting and recordkeeping provisions in 30 CFR 50, Notification, Investigation, Reports and Records of Accidents, Injuries and Illnesses, Employment and Coal Production in Mines, are essential elements in MSHA's Congressional mandate to reduce work-related injuries and illnesses among the nation's miners.

Section 30 CFR 50.30(a) requires mine operators and independent contractors working on mine property to report quarterly employment and coal production to MSHA on Form 7000–2. MSHA tabulates and analyzes the information from this form along with data from MSHA Form 7000–1, Mine Accident, Injury, and Illness Report (OMB No. 1219–0007), to compute incidence and severity rates for various injury types. These rates are used to analyze trends and to assess the degree of success of the health and safety efforts of MSHA and the mining industry.

II. Current Actions

MSHA is seeking approval of the existing information collection requirements as required by the Paperwork Reduction Act of 1995, as amended.

Type of Review: Extension.

Agency: Mine Safety and Health Administration.

Title: Quarterly Mine Employment and Coal Production Report.

Affected Public: Business or other for-profit.

Recordkeeping: 5 years after submission date.

Collection	Quarterly response	Total annual responses	Average time per response (minutes)	Burden hours
7000–2 mailed	17,203	68,812	30	34,406
7000–2 faxed	1,912	7,646	30	3,823
7000–2 electronic	624	2,496	15	624
Verify Data Mailer	n/a	10,000	30	5,000
Correct Data Mailer	n/a	247	15	62
Totals		89,205		43,915

Total Burden Cost (capital/startup): 0.

Total Burden Cost (operating/maintenance): $22,791.

Comments submitted in response to this notice will be summarized and/or included in the request for Office of Management and Budget approval of the information collection request; they will also become a matter of public record.

Dated: May 10, 1999.

George M. Fesak,

Director, Program Evaluation and Information Resources.

[FR Doc. 99–12219 Filed 5–13–99; 8:45 am]

BILLING CODE 4510–43–M

DEPARTMENT OF LABOR

Mine Safety and Health Administration

Proposed Information Collection Request Submitted for Public Comment and Recommendation; Mine Accident, Injury and Illness Report

ACTION: Notice.

SUMMARY: The Department of Labor, as part of its continuing effort to reduce paperwork and respondent burden conducts a preclearance consultation program to provide the general public and Federal agencies with an opportunity to comment on proposed and/or continuing collections of information in accordance with the Paperwork Reduction Act of 1995 (PRA95) [44 U.S.C. 3506(c)(2)(A)]. This program helps to ensure that requested data can be provided in the desired format, reporting burden (time and financial resources) is minimized, collection instruments are clearly understood, and the impact of collection requirements on respondents can be properly assessed.

Currently, the Mine Safety and Health Administration (MSHA) is soliciting comments concerning the proposed Quarterly Mine Employment and Coal Production Report (30 CFR 50.30, Form 7000–2).

MSHA is particularly interested in comments which:

* Evaluate whether the proposed collection of information is necessary for the proper performance of the functions of the agency, including whether the information will have practical utility;

* Evaluate the accuracy of the agency's estimate of the burden of the proposed collection of information, including the validity of the methodology and assumptions used;

* Enhance the quality, utility, and clarity of the information to be collected; and

* Minimize the burden of the collection of information on those who are to respond, including through the use of appropriate automated, electronic, mechanical, or other technological collection techniques or other forms of information technology, e.g., permitting electronic submissions of responses.

A copy of the proposed information collection request can be obtained by contact the employee listed below in the **FOR FURTHER INFORMATION CONTACT** section of this notice.

DATES: Submit comments on or before July 13, 1999.

ADDRESSES: Send comments to Theresa M. O'Malley, Chief, Records Management Branch, Program Evaluation and Information Resources, 4015 Wilson Boulevard, Room 735A, Arlington, VA 22203–1984. Commenters are encouraged to send their comments on a computer disk, or via E-mail to tomalley@msha.gov, along with an original printed copy. Mrs. O'Malley

can be reach at (703) 235–1470 (voice) or (703) 235–1563 (facsimile).

FOR FURTHER INFORMATION CONTACT: Mrs. Theresa M. O'Malley, Chief, Records Management Branch, Office of Program Evaluation and Information Resources, U.S. Department of Labor, Mine Safety and Health Administration, Room 735A, 4015 Wilson Boulevard, Arlington, VA 22203–1984. Mrs. O'Malley can be reached at tomalley@msha.gov (Internet E-mail), (703) 235–1470 (voice), or (703) 235–1563 (facsimile).

SUPPLEMENTARY INFORMATION:

I. Background

The reporting and recordkeeping provisions in 30 CFR 50, Notification, Investigation, Reports and Records of Accidents, Injuries and Illnesses, Employment and Coal Production in Mines, are essential elements in MSHA's Congressional mandate to reduce work-related injuries and illnesses among the nation's miners.

Section 50.10 requires mine operators and mining contractors to immediately notify MSHA in the event of an accident. This immediate notification is critical to MSHA's timely investigation and assessment of the probable cause of the accident.

Section 50.11 requires that the operator or contractor investigate each accident and occupational injury and prepare a report. The operator or contractor may *not* use MSHA Form 7000–1 as a report, *unless* the mine employs fewer than 20 miners *and* the occurrence involves an occupational injury not related to an accident.

Section 50.20(a) requires mine operators and mining contractors to report each accident, injury, or illness to MSHA on Form 7000–1 within 10 working days after an accident or injury has occurred or an occupational illness has been diagnosed. The use of MSHA Form 7000–1 provides for uniform information gathering across the mining industry.

MSHA tabulates and analyzes the information from MSHA Form 7000–1, along with data from MSHA Form 7000–2, Quarterly Mine Employment and Coal Production Report (OMB No. 1219–0006), to compute incidence and severity rates for various injury types. These rates are used to analyze trends and to assess the degree of success of the health and safety efforts of MSHA and the mining industry.

Accident, injury, and illness data when correlated with employment and production data provide information that allows MSHA to improve its safety and health enforcement programs, focus its education and training efforts, and establish priorities for its technical assistance activities in mine safety and health. Maintaining a current database allows MSHA to identify and direct increased attention to those mines, industry segments, and geographical areas where hazardous trends are developing. This could not be done effectively utilizing historical data. The information collected under Part 50 is the most comprehensive and reliable occupational data available concerning the mining industry.

Section 103(d) of the Federal Mine Safety and Health Act of 1977 (Mine Act) mandates that each accident be investigated by the operator to determine the cause and means of preventing a recurrence. Records of such accidents and investigations shall be kept and made available to the Secretary or his/her authorized representative and the appropriate State agency. Section 103(h) requires operators to keep any records and make any reports that are reasonably necessary for MSHA to perform its duties under the Mine Act. Section 103(j) of the Mine Act requires operators to notify MSHA of the occurrence of an accident and to take appropriate measures to preserve any evidence which would assist in the investigation into the cause or causes of the accident.

II. Current Actions

MSHA is seeking approval of the existing information collection requirements as required by the Paperwork Reduction Act of 1995, as amended.

Type of Review: Extension.

Agency: Mine Safety and Health Administration.

Title: Mine Accident, Injury and Illness Report.

Affected Public: Business or other for-profit.

Recordkeeping: 5 years after submission date.

Cite/Reference/Form/etc: 30 CFR 50.10, 50.11 and 50.20.

Regulatory reference	Responses	Frequency	Annual responses	Average time per response	Burden hours
50.10, Immediate Notification	91 fatals, 2,156 other	One-time	2,247	30 minutes	1,124
50.11(b), Investigation of Accidents/Occupational Injuries.	48 fatals, 20,670 nonfatal, 1,611 other	One-time	22,329	80 hours 2 hours 3 hours	50,013
50.11(b), Separate Reports <20 employees.	43 fatals, 545 other	One-time	588	40 hours 3 hours	3,355
50.20 Reports	22,997 initial, 11,937 follow-up	One-time	34,934	30 minutes 20 minutes	15,438
Verify Data Mailer	10,000	Annually	10,000	30 minutes	5,000
Correct Data Mailer	246	Annually	246	15 minutes	62
Totals					74,992

Total Burden Cost (capital/startup): 0.

Total Burden Cost (operating/maintenance): $19,199.

Comments submitted in response to this notice will be summarized and/or included in the request for Office of Management and Budget approval of the information collection request; they will also become a matter of public record.

Dated: May 10, 1999.

George M. Fesak,

Director, Program Evaluation and Information Resources.

[FR Doc. 99–12220 Filed 5–13–99; 8:45 am]

BILLING CODE 4510–43–M

NATIONAL CREDIT UNION ADMINISTRATION

Agency Information Collection Activities: Submission to OMB for Revision to Currently Approved Information Collections; Comment Request

AGENCY: National Credit Union Administration (NCUA).

ACTION: Request for comment.

SUMMARY: The NCUA intends to submit the following information collections to the Office of Management and Budget (OMB) for review and clearance under the Paperwork Reduction Act of 1995 (Public Law 104–13, 44 U.S.C. Chapter 35). These information collections were originally published on March 15, 1999. No comments were received.

DATES: Comments will be accepted until June 14, 1999.

ADDRESSES: Interested parties are invited to submit written comments to NCUA Clearance Officer or OMB Reviewer listed below:

Clearance Officer: Mr. James L. Baylen (703) 518–6411, National Credit Union Administration, 1775 Duke Street, Alexandria, Virginia 22314–3428, Fax No. 703–518–6433, E-mail: jbaylen@ncua.gov.

OMB Reviewer: Alexander T. Hunt (202) 395–7860, Office of Management and Budget, Room 10226, New Executive Office Building, Washington, DC 20503.

FOR FURTHER INFORMATION CONTACT: Copies of the information collection requests, with applicable supporting documentation, may be obtained by calling the NCUA Clearance Officer, James L. Baylen, (703) 518–6411.

SUPPLEMENTARY INFORMATION: Proposal for the following collections of information:

OMB Number: 3133–0057.

Form Number: N/A.

Type of Review: Extension of a currently approved collection.

Title: Monthly Board Meeting Minutes.

Description: The Federal Credit Union (FCU) Act and the standard FCU bylaws require FCUs to maintain minutes of its board and member meetings.

Respondents: Federal Credit Unions.

Estimated No. of Respondents/Recordkeepers: 6,888.

Estimated Burden Hours Per Response: 3.25 hours.

Frequency of Response: 13 meetings per year @ 15 minutes per meeting.

Estimated Total Annual Burden Hours: 22,386.

Estimated Total Annual Cost: N/A.

OMB Number: 3133–0081.

Form Number: N/A.

Type of Review: Extension of a currently approved collection.

Title: Credit Union Bylaws and Certification, Bylaws, Article XIX, Section 5.

Description: The standard FCU Bylaws require that each Credit Union maintain copies of important documents and election results.

Respondents: Federal Credit Union board of directors.

Estimated No. of Respondents/Recordkeepers: 6,888.

Estimated Burden Hours Per Response: 12 minutes.

Frequency of Response: 13 meetings per year @ 12 minutes per meeting.

Estimated Total Annual Burden Hours: 1379.

Estimated Total Annual Cost: N/A.

OMB Number: 3133–0139.

Form Number: N/A.

Type of Review: Extension of a currently approved collection.

Title: Organization and Operation of Federal Credit Unions.

Description: Federal Credit Unions wishing to pay lending-related incentives to employees must establish written policies.

Respondents: Certain Federal Credit Unions.

Estimated No. of Respondents/Recordkeepers: 1,000.

Estimated Burden Hours Per Response: One.

Frequency of Response: On Occasion.

Estimated Total Annual Burden Hours: 1,000.

Estimated Total Annual Cost: $25,000.

OMB Number: 3133–0140.

Form Number: N/A.

Type of Review: Extension of a currently approved collection.

Title: Secondary Capital for Low-Income Designated Credit Unions.

Description: Low-income designated credit unions that offer secondary capital accounts must adopt a written plan, send a copy of their plan to their NCUA Regional Director, and have account contract documents and disclosure forms.

Respondents: Certain Limited-Income Federal Credit Unions.

Estimated No. of Respondents/Recordkeepers: 26.

Estimated Burden Hours Per Response: 3.

Frequency of Response: On occasion.

Estimated Total Annual Burden Hours: 78.

Estimated Total Annual Cost: N/A.

By the National Credit Union Administration Board on May 10, 1999.

Hattie M. Ulan,

Acting Secretary of the Board.

[FR Doc. 99–12268 Filed 5–13–99; 8:45 am]

BILLING CODE 7535–01–U

NATIONAL FOUNDATION ON THE ARTS AND THE HUMANITIES

National Endowment for the Arts; Combined Arts Advisory Panel

Pursuant to Section 10(a)(2) of the Federal Advisory Committee Act (Pub. L. 92–463), as amended, notice is hereby given that a meeting of the Combined Arts Panel, Design Section (Creation & Presentation category) to the National Council on the Arts will be held on June 24–25, 1999. The panel will meet from 9:00 a.m. to 6:00 p.m. on June 24, and from 9:00 a.m. to 4:00 p.m. on June 25, in Room 730 at the Nancy Hanks Center, 1100 Pennsylvania Avenue, NW, Washington, D.C., 20506. A portion of this meeting, from 10:45 a.m. to 4:00 p.m. on June 25, will be open to the public for a policy discussion.

The remaining portions of this meeting, from 9:00 a.m. to 6:00 p.m. on June 24th and from 9:00 a.m. to 10:45 a.m. on June 25th, are for the purpose of Panel review, discussion, evaluation, and recommendation on applications for financial assistance under the National Foundation on the Arts and the Humanities Act of 1965, as amended, including information given in confidence to the agency by grant applicants. In accordance with the determination of the Chairman of May 14, 1998, these sessions will be closed to the public pursuant to (c)(4)(6) and (9)(B) of section 552b of Title 5, United States Code.

Any person may observe meetings, or portions thereof, of advisory panels which are open to the public, and, if time allows, may be permitted to participate in the panel's discussions at the discretion of the panel chairman and

with the approval of the full-time Federal employee in attendance.

If you need special accommodations due to a disability, please contact the Office of AccessAbility, National Endowment for the Arts, 1100 Pennsylvania Avenue, N.W., Washington, D.C. 20506, 202/682–5532, TDY–TDD 202/682–5496, at least seven (7) days prior to the meeting.

Further information with reference to this meeting can be obtained from Ms. Kathy Plowitz-Worden, Office of Guidelines & Panel Operations, National Endowment for the Arts, Washington, D.C. 20506, or call 202/682–5691.

Dated: May 6, 1999.

Kathy Plowitz-Worden,

Panel Coordinator, Panel Operations, National Endowment for the Arts.

[FR Doc. 99–12221 Filed 5–13–99; 8:45 am]

BILLING CODE 7537–01–M

NATIONAL SCIENCE FOUNDATION

Special Emphasis Panel in Electrical and Communications Systems; Notice of Meeting

In accordance with the Federal Advisory Committee Act (Pub. L. 92–463, as amended), the National Science Foundation announces the following meeting.

Name: Special Emphasis Panel in Electrical and Communications Systems (1196).

Date and Time: May 31–June 1, 1999; 8:30 AM–5 PM.

Place: Rooms 330 & 340, National Science Foundation, 4201 Wilson Boulevard, Arlington, VA.

Type of Meeting: Closed.

Contact Persons: Dr. Saifur Rahman, Program Director, Control, Networks, and Computational Intelligence (CNCI), Division of Electrical and Communications Systems, National Science Foundation, 4201 Wilson Blvd., Room 675, Arlington, VA 22230. Telephone: (703) 306–1339.

Purpose of Meeting: To provide advice and recommendations concerning proposals submitted to NSF for financial support.

Agenda: To review and evaluate ** Regular Research ** proposals as part of the selection process for awards.

Reason for Closing: The proposals being reviewed include information of a proprietary or confidential nature, including technical information; financial data, such as salaries; and personal information concerning individuals associated with the proposals. These matters are exempt under 5 U.S.C. 552b(c), (4) and (6) of the Government in the Sunshine Act.

Dated: May 10, 1999.

Karen J. York,

Committee Management Officer.

[FR Doc. 99–12198 Filed 5–13–99; 8:45 am]

BILLING CODE 7555–01–M

NATIONAL SCIENCE FOUNDATION

Special Emphasis Panel in Information and Intelligent Systems; Notice of Meeting

In accordance with the Federal Advisory Committee Act (Pub. L. 92–463, as amended), the National Science Foundation announces the following meeting:

Name: Special Emphasis Panel in Information and Intelligent Systems(#1200).

Date and Time: May 27–May 28, 1999 8 a.m.–5 p.m.

Place: Holiday Inn Capitol 550 C Street, SW Washington, DC 20024.

Type of Meeting: Closed.

Contact Persons: Dr. Gary Strong, Deputy Director, Division of Information and Intelligent Systems, Room 1115, National Science Foundation, 4201 Wilson Blvd., Arlington, VA 22230. Telephone: (703) 306–1928.

Purpose of Meeting: To provide advice and recommendations concerning proposals submitted to NSF for financial support.

Agenda: To review and evaluate Information and Data Management proposals as part of the selection process for awards.

Reason for closing: The proposals being reviewed include information of a proprietary or confidential nature, including technical information; financial data, such as salaries; and personal information concerning individuals associated with the proposals. These matters are exempt under 5 U.S.C. 552b(c), (4) and (6) of the Government in the Sunshine Act.

Dated: May 10, 1999.

Karen J. York,

Committee Management Officer.

[FR Doc. 99–12197 Filed 5–13–99; 8:45 am]

BILLING CODE 7555–01–M

NUCLEAR REGULATORY COMMISSION

[Docket No. 40–8989]

Environmental Assessment and Finding of No Significant Impact for Exemption From Certain NRC Licensing Requirements for Special Nuclear Material for Envirocare of Utah, Inc.

Background

The U.S. Nuclear Regulatory Commission (NRC or the Commission) is considering issuance of an Order pursuant to Section 274f of the Atomic Energy Act that would exempt Envirocare of Utah, Inc. (Envirocare) from certain NRC regulations. The exemption would allow Envirocare, under specified conditions, to possess waste containing special nuclear material (SNM), in greater mass quantities than specified in 10 CFR Part 150, at Envirocare's low-level waste (LLW) disposal facility located in Clive, Utah, without obtaining an NRC license pursuant to 10 CFR Part 70. A description of the operations at the facility and staff's safety analysis for the exemption are discussed in the companion Safety Evaluation Report (SER).

Environmental Assessment

Identification of Proposed Action

Staff proposes to exempt Envirocare from the licensing requirements in 10 CFR Part 70. The exemption would permit Envirocare to possess SNM without regard for mass. Rather than relying on mass to ensure criticality safety, concentration-based limits are being applied, such that accumulations of SNM at or below these concentration limits would not pose a criticality safety concern. The methodology used to establish these limits is discussed in the SER. The exemption is contingent on Envirocare complying with specific conditions in the exemption. These conditions are as follows:

1. Concentrations of SNM in individual waste containers must not exceed the following values at time of receipt:

Radionuclide	Maximum concentration (pCi/g)	Measurement uncertainty (pCi/g)
U-235 [a]	1900	285
U-235 [b]	1190	179
U-235 [c]	160	24
U-235 [d]	680	102
U-233	75,000	11,250
Pu-236	500	75
Pu-238	10,000	1,500
Pu-239	10,000	1,500
Pu-240	10,000	1,500
Pu-241	350,000	50,000
Pu-242	10,000	1,500
Pu-243	500	75
Pu-244	500	75

[a] For uranium below 10 percent enrichment and a maximum of 20 percent MgO of the weight of the waste.

[b] For uranium at or above 10 percent enrichment and a maximum of 20 percent MgO of the weight of the waste.

[c] For uranium at any enrichment with unlimited MgO or beryllium.

[d] For uranium at any enrichment with sum of MgO and beryllium not exceeding 49 percent of the weight of the waste.

The measurement uncertainty values in column 3 above represent the maximum one-sigma uncertainty associated with the measurement of the concentration of the particular radionuclide.

The SNM must be homogeneously distributed throughout the waste. If the SNM is not homogeneously distributed, then the limiting concentrations must not be exceeded on average in any contiguous mass of 145 kilograms.

2. Except as allowed by notes a, b, c, and d in Condition 1, waste must not contain ''pure forms'' of chemicals containing carbon,

fluorine, magnesium, or bismuth in bulk quantities (e.g., a pallet of drums, a B–25 box). By ''pure forms,'' it is meant that mixtures of the above elements such as magnesium oxide, magnesium carbonate, magnesium fluoride, bismuth oxide, etc. do not contain other elements. These chemicals would be added to the waste stream during processing, such as at fuel facilities or treatment such as at mixed waste treatment facilities. The presence of the above materials will be determined by the generator, based on process knowledge or testing.

3. Except as allowed by notes c and d in Condition 1, waste accepted must not contain total quantities of beryllium, hydrogenous material enriched in deuterium, or graphite above one percent of the total weight of the waste. The presence of the above materials will be determined by the generator, based on process knowledge, physical observations, or testing.

4. Waste packages must not contain highly water soluble forms of uranium greater than 350 grams of uranium-235 or 200 grams of uranium-233. The sum of the fractions rule will apply for mixtures of U-233 and U-235. Highly soluble forms of uranium include, but are not limited to: uranium sulfate, uranyl acetate, uranyl chloride, uranyl formate, uranyl fluoride, uranyl nitrate, uranyl potassium carbonate, and uranyl sulfate. The presence of the above materials will be determined by the generator, based on process knowledge or testing.

5. Mixed waste processing of waste containing SNM will be limited to stabilization (mixing waste with reagents), micro-encapsulation, and macro-encapsulation using low-density polyethylene.

6. Envirocare shall require generators to provide the following information for each waste stream:

Pre-Shipment

1. Waste Description. The description must detail how the waste was generated, list the physical forms in the waste, and identify uranium chemical composition.

2. Waste Characterization Summary. The data must include a general description of how the waste was characterized (including the volumetric extent of the waste, and the number, location, type, and results of any analytical testing), the range of SNM concentrations, and the analytical results with error values used to develop the concentration ranges.

3. Uniformity Description. A description of the process by which the waste was generated showing that the spatial distribution of SNM must be uniform, or other information supporting spatial distribution.

4. Manifest Concentration. The generator shall describe the methods to be used to determine the concentrations on the manifests. These methods could include direct measurement and the use of scaling factors. The generator shall describe the uncertainty associated with sampling and testing used to obtain the manifest concentrations.

Envirocare shall review the above information and, if adequate, approve in writing this pre-shipment waste characterization and assurance plan before permitting the shipment of a waste stream. This will include statements that Envirocare has a written copy of all the information required above, that the characterization information is adequate and consistent with the waste description, and that the information is sufficient to demonstrate compliance with conditions 1 through 4. Where generator process knowledge is used to demonstrate compliance with conditions 1, 2, 3, or 4, Envirocare shall review this information and determine when testing is required to provide additional information in assuring compliance with the conditions. Envirocare shall retain this information as required by the State of Utah to permit independent review.

At Receipt

Envirocare shall require generators of SNM waste to provide a written certification with each waste manifest that states that the SNM concentrations reported on the manifest do not exceed the limits in Condition 1, that the measurement uncertainty does not exceed the uncertainty value in Condition 1, and that the waste meets conditions 2 through 4.

7. Sampling and radiological testing of waste containing SNM must be performed in accordance with the Utah Division of Radiation Control License Condition 58.

8. Envirocare shall notify the NRC, Region IV office, within 24 hours if any of the above conditions are violated. A written notification of the event must be provided within 7 days.

9. Envirocare shall obtain NRC approval prior to changing any activities associated with the above conditions.

Need for the Proposed Action

In May 1997, the State of Utah determined that Envirocare had exceeded the SNM possession limits in its State of Utah license. Consequently, NRC Region IV conducted an inspection of the facility in June 1997. The findings of the inspection are discussed in an inspection report and demand for information dated May 21, 1998. As a result of the inspection, NRC issued a Confirmatory Order (Order) on June 25, 1997, which required Envirocare, in part, to reduce its possession of SNM and to submit a compliance plan (CP) to NRC for approval. As part of the approved CP, trucks containing SNM waste can proceed to the disposal cell (assuming the conditions stated in the Order apply) without counting the SNM waste in Envirocare's possession inventory. This waste is considered ''in-transit,'' under the exemption of 10 CFR 70.12, because the carrier is still present.

In a letter dated October 14, 1997, the State of Utah informed NRC that SNM waste was being transferred from rail cars to trucks in the Salt Lake City rail yard and then taken to the Envirocare site either directly or after storage in transit at a transport facility. To evaluate this practice, the NRC and the U.S. Department of Transportation (DOT) conducted an inspection. The inspection concluded that applicable NRC and DOT regulations were being followed. (The inspection is documented in a report dated April 21, 1998.)

Before the Order and CP, rail shipments were transported directly to a rail siding adjacent to the site. Rail cars were staged on the siding until the waste could be moved onto the site within licensed limits. Subsequent to the Order and CP which, as noted, provide for trucks to proceed directly to the disposal cell without being counted in the SNM possession inventory, it has been operationally advantageous for Envirocare to receive SNM waste via truck. In addition, transfer from rail to truck in Salt Lake City is more economical for the shippers because rolling stock rental fees are reduced. Thus, the Order and CP may have led to a practice of transferring of SNM waste from rail cars to trucks in Salt Lake City. Some trucks and SNM waste are staged at a nearby industrial facility and do not go directly to the disposal site because of the SNM possession limit. Staff concludes that this process has resulted in a change in the mode of transportation of waste to the site (i.e., more truck shipments), leading to a slightly higher probability of a transportation accident. Moreover, the increased waste handling has increased the possibility of container rupture and resultant spillage in a metropolitan area. In addition, SNM waste is being staged while in transit at nearby unlicensed industrial facility. Thus, the current practice—while conforming to applicable NRC and DOT regulations—might be regarded as less safe and may be a direct result of conditions in the CP.

To resolve this issue, staff explored ways in which rail cars could be allowed to proceed directly to the site. Staff considered that if the SNM waste was shipped in accordance with 10 CFR Part 71, and applicable DOT regulations, that these conditions were sufficiently protective while the waste was on the rail cars, regardless of being located inside or outside the site boundary. Staff further evaluated whether concentration limits could be established to prevent an inadvertent criticality. Considering that concentration limits could be established, an acceptable rationale, therefore, exists for allowing above-ground storage of similar material in a comparable or more dispersed configuration. This rationale, in the staff's view, supports NRC taking action

to alleviate the regulatory constraint that appears to have led to the less than optimal practice, described above, for transporting SNM waste to Envirocare.

Environmental Impacts of the Proposed Action

Envirocare is licensed by the State of Utah, an NRC Agreement State, under a 10 CFR Part 61 equivalent license for the disposal of LLW. Envirocare is also licensed by Utah to dispose of mixed-radioactive and hazardous wastes. In addition, Envirocare has an NRC license (SMC–1559) to dispose of waste containing 11(e)2 byproduct material. NRC has prepared an environmental impact statement (EIS) (NUREG–1476), SERs, and environmental assessments (EAs) for its licensing action. The State of Utah, in support of its licensing activities, has also prepared SERs. The proposed actions now under consideration would not change the potential environmental effects assessed in these documents.

The regulations regarding SNM possession in 10 CFR part 150 set mass limits whereby a licensee is exempted from the licensing requirements of 10 CFR part 70 and can be regulated by an Agreement State. The licensing requirements in 10 CFR part 70 apply to persons possessing greater than critical mass quantities (as defined in 10 CFR 150.11). The principal emphasis of 10 CFR part 70 is criticality safety and safeguarding SNM against diversion or sabotage. The NRC staff considers that criticality safety can be maintained by relying on concentration limits, under the specified conditions. These concentration limits are considered an alternative definition of quantities not sufficient to form a critical mass to the weight limits in 10 CFR 150.11; thereby, assuring the same level of protection.

Therefore, the NRC concludes that this proposed exemption will have no significant radiological or nonradiological environmental impacts.

Alternatives to the Proposed Action

The NRC staff considered two alternatives to the proposed action. One alternative to the proposed action would be to not grant the exemption (no-action alternative); therefore, increased handling of SNM waste would continue to occur in Salt Lake City, Utah, and at a nearby industrial site. Although the incremental dose increase to transportation workers and to the public may be small, it is greater than if the shipments continued to the site via rail. The current practice is considered less desirable.

Another alternative would be to grant the exemption without condition. This option would not provide sufficient protection of health, safety, and the environment.

Agencies and Persons Consulted

Officials from the State of Utah, Department of Environmental Quality, Division of Radiation Control were contacted about this EA for the proposed action and had no comments.

Finding of No Significant Impact

The environmental impacts of the proposed action have been reviewed in accordance with the requirements set forth in 10 CFR part 51. Based upon the foregoing EA, the NRC finds that the proposed action of granting an exemption from NRC licensing requirements in 10 CFR Part 70 will not significantly impact the quality of the human environment. Accordingly, the NRC has decided not to prepare an EIS for the proposed exemption.

For Further Information Contact: Timothy E. Harris, Decommissioning Branch, Division of Waste Management, Office of Nuclear Material Safety and Safeguards, U.S. Nuclear Regulatory Commission, Washington, DC 20555–0001. Telephone: (301) 415–6613. Fax.: (301) 415–5398.

Dated at Rockville, Maryland, this 7th day of May 1999.

For the Nuclear Regulatory Commission.

John T. Greeves,

Director, Division of Waste Management, Office of Nuclear Material Safety and Safeguards.

[FR Doc. 99–12241 Filed 5–13–99; 8:45 am]

BILLING CODE 7590–01–P

PENSION BENEFIT GUARANTY CORPORATION

Interest Assumption for Determining Variable-Rate Premium; Interest Assumptions for Multiemployer Plan Valuations Following Mass Withdrawal

AGENCY: Pension Benefit Guaranty Corporation.

ACTION: Notice of interest rates and assumptions.

SUMMARY: This notice informs the public of the interest rates and assumptions to be used under certain Pension Benefit Guaranty Corporation regulations. These rates and assumptions are published elsewhere (or are derivable from rates published elsewhere), but are collected and published in this notice for the convenience of the public. Interest rates are also published on the PBGC's web site (http://www.pbgc.gov).

DATES: The interest rate for determining the variable-rate premium under part 4006 applies to premium payment years beginning in May 1999. The interest assumptions for performing multiemployer plan valuations following mass withdrawal under part 4281 apply to valuation dates occurring in June 1999.

FOR FURTHER INFORMATION CONTACT: Harold J. Ashner, Assistant General Counsel, Office of the General Counsel, Pension Benefit Guaranty Corporation, 1200 K Street, NW., Washington, DC 20005, 202–326–4024. (For TTY/TDD users, call the Federal relay service toll-free at 1–800–877–8339 and ask to be connected to 202–326–4024.)

SUPPLEMENTARY INFORMATION:

Variable-Rate Premiums

Section 4006(a)(3)(E)(iii)(II) of the Employee Retirement Income Security Act of 1974 (ERISA) and § 4006.4(b)(1) of the PBGC's regulation on Premium Rates (29 CFR part 4006) prescribe use of an assumed interest rate in determining a single-employer plan's variable-rate premium. The rate is the ''applicable percentage'' (currently 85 percent) of the annual yield on 30-year Treasury securities for the month preceding the beginning of the plan year for which premiums are being paid (the ''premium payment year''). The yield figure is reported in Federal Reserve Statistical Releases G.13 and H.15.

The assumed interest rate to be used in determining variable-rate premiums for premium payment years beginning in May 1999 is 4.72 percent (*i.e.*, 85 percent of the 5.55 percent yield figure for April 1999).

The following table lists the assumed interest rates to be used in determining variable-rate premiums for premium payment years beginning between June 1998 and May 1999.

For premium payment years beginning in:	The assumed interest rate is:
June 1998	5.04
July 1998	4.85
August 1998	4.83
September 1998	4.71
October 1998	4.42
November 1998	4.26
December 1998	4.46
January 1999	4.30
February 1999	4.39
March 1999	4.56
April 1999	4.74
May 1999	4.72

Multiemployer Plan Valuations Following Mass Withdrawal

The PBGC's regulation on Duties of Plan Sponsor Following Mass Withdrawal (29 CFR part 4281) prescribes the use of interest

assumptions under the PBGC's regulation on Allocation of Assets in Single-employer Plans (29 CFR part 4044). The interest assumptions applicable to valuation dates in June 1999 under part 4044 are contained in an amendment to part 4044 published elsewhere in today's **Federal Register**. Tables showing the assumptions applicable to prior periods are codified in appendix B to 29 CFR part 4044.

Issued in Washington, DC, on this 10th day of May 1999.

David M. Strauss,

Executive Director, Pension Benefit Guaranty Corporation.

[FR Doc. 99–12174 Filed 5–13–99; 8:45 am]

BILLING CODE 7708–01–P

PRESIDIO TRUST

Notice of Receipt of and Availability for Public Comment on an Application for Wireless Telecommunications Facilities Site; The Presidio of San Francisco, California

AGENCY: The Presidio Trust.

ACTION: Public notice.

SUMMARY: This notice announces the Presidio Trust's receipt of and availability for public comment on an application from Bay Area Cellular Telephone Company, dba Cellular One, for a wireless telecommunications facilities site in The Presidio of San Francisco (the ''Project''). The proposed location of the Project is in the vicinity of Buildings 1211 and 1255, Armistead and Hoffman Streets, San Francisco, California (the ''Project Site'').

The Project involves placing two wooden utility poles and a one-story equipment building at the Project Site. One of the wooden utility poles will be approximately 50 feet tall and the other will be approximately 40 feet tall. The one-story equipment building will be 9 feet by 15 feet. Power for the Project will be from underground coaxial cables connected to existing power sources. Connection to telephone lines will be through existing telephone lines.

Comments: Comments on the proposed Project must be sent to Devon Danz, Presidio Trust, 34 Graham Street, P.O. Box 29052, San Francisco, CA 94129–0052, and be received by June 14, 1999. A copy of Cellular One's application is available upon request to the Presidio Trust.

FOR FURTHER INFORMATION CONTACT: Devon Danz, Presidio Trust, 34 Graham Street, P.O. Box 29052, San Francisco, CA 94129–0052. Telephone: 415–561–5300.

Dated: May 10, 1999.

Karen A. Cook,

General Counsel.

[FR Doc. 99–12317 Filed 5–13–99; 8:45 am]

BILLING CODE 4310–4R–U

SECURITIES AND EXCHANGE COMMISSION

[Investment Company Act Release No. 23829; 812–11232]

New England Funds Trust I, et al,; Notice of Application

May 10, 1999.

AGENCY: Securities and Exchange Commission (''SEC'').

ACTION: Notice of application for an order under section 6(c) of the Investment Company Act of 1940 (the ''Act'') to amend a prior order that granted an exemption from section 15(a) of the Act and rule 18f–2 Under the Act.

SUMMARY OF APPLICATION: Applicants request an order amending a prior order that permits them to enter into and materially amend investment sub-advisory contracts without receiving shareholder approval (''Prior Order'').[1]

APPLICANTS: New England Funds Trust I, New England Funds Trust II, New England Funds Trust III, New England Cash Management Trust, New England Tax Exempt Money Market Trust (the ''New England Funds''), New England Zenith Fund (the ''Zenith Fund'') (together with the New England Funds, the ''Trusts'') New England Funds Management, L.P. (''NEFEM''), and TNE Advisers, Inc. (''TNE Advisers'').

FILING DATES: The application was filed on July 24, 1998, and amended on December 2, 1998, and on March 4, 1999. Applicants have agreed to file an amendment during the notice period, the substance of which is included in this notice.

HEARING OR NOTIFICATION OF HEARING: An order granting the requested relief will be issued unless the SEC orders a hearing. Interested persons may request a hearing by writing to the SEC's Secretary and serving applicants with a copy of the request, personally or by mail. Hearing requests should be received by the SEC by 5:30 p.m. on June 3, 1999 and should be accompanied by proof of service on the applicants, in the form of an affidavit or, for lawyers, a certificate of service. Hearing requests should state the nature of the writer's interest, the reason for the request. and the issues contested. Persons may request notification of a hearing by writing to the SEC's Secretary.

ADDRESSES: Secretary, SEC, 450 5th Street, NW, Washington, DC 20549–0609. Applicants, 399 Boylston Street, 4th Floor, Boston, MA 02116.

FOR FURTHER INFORMATION CONTACT: Mary Kay Frech, Branch Chief, at (202) 942–0564 (Division of Investment Management, Office of Investment Company Regulation).

SUPPLEMENTARY INFORMATION: The following is a summary of the application. The complete application may be obtained for a fee from the SAC's Public Reference Branch, 450 5th Street, N.W., Washington, DC, 20549–0102 (tel. 202–942–8090).

Applicants' Representations

1. The Trusts are open-end management investment companies registered under the Act. The Zenith Fund serves as a funding vehicle for certain variable annuity and variable life insurance products is sued by Metropolitan Life Insurance Company, and its subsidiary, New England Life Insurance Company.

2. NEFM and TNE Advisers are registered as investment advisers under the Investment Advisers Act of 1940. NEFM serves as investment adviser to each of the New England Funds, except the New England Growth Fund Series. TNE Advisers serves as investment adviser for each series of the Zenith Fund, except the Capital Growth Series.

3. Each series of each of the New England Funds (except the New England Growth Fund Series) and of the Zenith Fund (except the Capital Growth Series) (together, the ''Series'') utilizes an adviser/sub-adviser management structure. Under this structure, either NEFM or TNE Advisers acts as each Series' investment adviser, delegating the day-to-day portfolio management for each Series to one or more sub-advisers.

4. On September 17, 1997, applicants received the Prior Order permitting NEFM and TNE Advisers to enter into sub-advisory agreements for the Series without obtaining shareholder approval. Among other things, the Prior Order is subject to a condition that requires that a notice, in the form of an information statement, be sent to shareholders following the hiring of a new sub-adviser or the implementation of a material change to a sub-advisory agreement. Applicants seek to amend the Prior Order to preserve the requirement to provide notice to shareholders regarding the hiring of a new sub-adviser, but eliminate the

[1] *New England Funds Trust I, et al.,* Investment Company Act Release Nos. 22796 (Aug. 22, 1997) (notice) and 22824 (Sept. 17, 1997) (order).

requirement to provide a notice in the form of an information statement of other material changes to a sub-advisory agreement.

5. Applicants assert that the requested amendment would save the Series the expense of preparing and mailing an information statement to shareholders, and would be consistent with the relief granted in the Prior Order. Applicants also state that any amendments to sub-advisory agreements which are material so as to warrant disclosure in the prospectus would be disclosed to shareholders by means of prospectus supplements commonly known as ''stickers''.

Applicants' Legal Analysis

1. Section 6(c) of the Act authorizes the SEC to exempt persons or transactions from the provisions of the Act to the extent that such exemptions are necessary or appropriate in the public interest and consistent with the protection of investors and the purposes fairly intended by the policy and provisions of the Act. Applicants submit that amending the Prior Order as requested would be consistent with the standards of section 6(c) of the Act.

Applicants' Conditions

Applicants agree that the order granting the requested relief will be subject to the conditions of the Prior Order, with condition 3 of the Prior Order modified to read as follows:

Within 90 days after the hiring of any new sub-adviser, the Trusts will furnish shareholders with all information about a new sub-adviser or sub-advisory agreement that would be included in a proxy statement. The information will include any change in the disclosure caused by the addition of a new sub-adviser. The Series will meet this condition by providing shareholders with an information statement meeting the requirements of Regulation 14C and Schedule 14C under the Securities Exchange Act of 1934 (the ''Exchange Act''). The information statement also will meet the requirements of Item 22 of Schedule 14A under the Exchange Act. The Zenith Fund will ensure that the information statement is furnished to the unitholders of any separate account for which the Zenith Fund serves as a funding vehicle.

For the SEC, by the Division of Investment Management, under delegated authority.

Margaret H. McFarland,

Deputy Secretary.

[FR Doc. 99–12231 Filed 5–13–99; 8:45 am]

BILLING CODE 8010–01–M

SECURITIES AND EXCHANGE COMMISSION

[Release No. 35–27017]

Filings Under the Public Utility Holding Company Act of 1935, as Amended (''Act'')

May 7, 1999.

Notice is hereby given that the following filing(s) has/have been made with the Commission pursuant to provisions of the Act and rules promulgated under the Act. All interested persons are referred to the applications(s) and/or declaration(s) for complete statements of the proposed transactions(s) summarized below. The application(s) and/or declarations(s) and any amendments is/are available for public inspection through the Commission's Branch of Public Reference.

Interested persons wishing to comment or request a hearing on the applications(s) and/or declaration(s) should submit their views in writing by June 1, 1999, to the Secretary, Securities and Exchange Commission, Washington, DC 20549–0609, and serve a copy on the relevant application(s) and/or declarant(s) at the address(es) specified below. Proof of service (by affidavit or, in case of an attorney at law, by certificate) should be filed with the request. Any request for hearing should identify specifically the issues of facts or law that are disputed. A person who so requests will be notified of any hearing, if ordered, and will receive a copy of any notice or order issued in the matter. After June 1, 1999, the application(s) and/or declaration(s), as filed or as amended, may be granted and/or permitted to become effective.

West Pen Power Company (70–9469)

West Pen Power Company (''West Penn''), 800 Cabin Hill Drive, Greensburg, Pennsylvania 15601, a wholly owned utility subsidiary of Allegheny Energy, Inc., (''Allegheny''), a registered holding company, 10435 Downsvills Pike, Hagerstown, MD 21740–1766, has filed an application-declaration with this Commission under sections 6(a), 7, 9(a), 10, 12(b), and 13(b) of the Act and rules 45, 54, 90 and 91 under the Act.

The Electricity Generation Customer Choice and Competition Act of 1996 (''Competition Act'') provides for the restructuring of the electric utility industry in Pennsylvania. The Competition Act requires the unbundling of electric services into separate supply, transmission, and distribution services with open retail competition for supply. The Competition Act requires utilities to submit restructuring plans to the Pennsylvania Public Utility Commission (''PUC''), including transition costs which result from competition. Transition costs include regulatory assets, long-term purchased power commitments, and other costs, including investment in generating plans, spend-fuel disposal, retirement costs and reorganization costs, for which an opportunity for recovery is allowed in an amount determined by the PUC to be just and reasonable. The Competition Act also authorizes the PUC to adopt Qualified Rate Orders (''QRO'') to approve the issuance of debt securities (''Transition Bonds'') by a utility as a mechanism to mitigate transition costs and reduce customer rates. Under the Competition Act, proceeds of Transition Bonds are required to be used principally to reduce qualified stranded costs and the related capitalization of the utility. To the extent a QRO and the rates and other charges authorized are declared to be irrevocable, the irrevocable QRO issued by the PUC will create Intangible Transition Property (''ITP'') by contract which can be used to secure the transition bonds. The Transition Bonds are repayable from irrevocable Intangible Transition Charges (''ITC'').[1]

West Pen filed its restructuring plan, which unbundled generation from transmission and distribution, with the PUC. On November 19, 1998 the PUC adopted a final QRO in response to West Penn's application and authorized the recovery of transition costs by West Penn of $670 million (or $630 million in the event of a merger with DQE, Inc.).[2]

In connection with the November 19, 1998 QRO, West Penn request authority to form a new, wholly owned subsidiary (''Newco'').[3] Newco will be organized under the laws of a state other than

[1] ITCs are generally defined as amounts authorized to be imposed on all customer bills, under an irrevocable QRO, for the purpose of recovering the principal and interest on the Transition Bonds, costs to cover credit enhancements, cost of retiring existing debt and equity, costs of defeasance, servicing fees and other related fees, taxes, costs and expenses (''Qualified Transition Expenses'' or ''QTEs''). ITCs are collected through non-bypassable charges imposed by an electric utility that provides electric transmission and distribution services to a customer located in its certificated territory, regardless of whether that customer continues to purchase electricity from that electric utility.

[2] Allegheny has a pending application with the Commission regarding a proposed merger with DQE, Inc. in File No. 70–9147. However, the merger is now the subject of litigation.

[3] Newco initially will be capitalized, in an amount of at least 0.5% of the total principal amount of the Transition Bonds, through some form of capital contribution by West Penn.

Pennsylvania, as a new, wholly owned subsidiary of West Penn. Newco will issue and West Penn will acquire all of Newco's stock. West Penn will then transfer the ITP and associated ITC revenue stream created by the QRO to Newco in exchange for the Newco stock, which will be treated as a capital contribution or a true sale, but not as a secured financing for bankruptcy purposes.

West Penn also requests authority to form a wholly owned limited liability subsidiary of Newco (''Special Purpose LLC'').[4] Special Purpose LLC will issue and Newco will acquire all of the limited liability interest in Special Purpose LLC. Newco will then transfer the ITP and associated ITC revenue stream to its newly created, bankruptcy remote, wholly owned Special Purpose LLC company.

West Penn, through the Special Purpose LLC, requests authority to issue up to $670 million in Transition Bonds, secured by the ITP and the associated ITC revenue stream. The Special Purpose LLC may issue Transition Bonds in the form of debt securities in one or more series, and each series may be issued in one or more classes. The characteristics of the Transition Bonds will be substantially similar to bonds issued by other issuers in similar contexts. Each series will be entitled to recover, through the ITC approved by one or more QROs, QTEs (each as defined below), based on a specified principal amount of Transition Bonds for the series, including interest at the coupon rate or rates applicable to the series. There will be a date on which each of the Transition Bonds is expected to be repaid and a legal final maturity date by which the Transition Bonds must be repaid. Neither the expected final maturity nor the legal final maturity will be later than January 2, 2010. The expected final maturity date may vary from the legal final maturity date due to the fact that the ITC is calculated by taking into account variables such as the anticipated level of chargeoffs, delinquencies, and usage, which may differ from the amounts actually incurred or achieved.

Newco requests authority to loan West Penn up to $670 million and West Penn request authority to issue a note of up to $670 million to Newco. The loan will have interest rates and maturities that are designed to parallel Newco's effective cost of capital.

When Penn proposes to enter into a Servicing Agreement with the Special Purpose LLC, whereby West Pen will act as the servicer of the ITCs revenue stream as part of normal utility collections. In this capacity, West Penn, among other things would: (1) bill customers and make collections on behalf of the Special Purpose LLC; and (2) file with the PUC for adjustment to the ITC's to achieve a level which allows for full recovery of QTEs in accordance with the amortization schedule for each series of Transition Bonds. West Penn may subcontract with other companies to carry out some of its servicing responsibilities, so long as the ratings of the Transition Bonds are neither reduced nor withdrawn. West Penn would be entitled to compensation, in the form of a servicing fee, for its servicing activities and reimbursement for certain of its expenses in the manner described in the documentation applicable to each series. In order to satisfy the rating agency requirements for a bankruptcy remote entity, the servicing fee must be an arms-length fee, which would be reasonable and sufficient for a third party performing similar services. The servicing fee would be set at an annual level of not more than two percent of the outstanding amount of the Transition Bonds.

Any successor to West Penn under any merger, consolidation, bankruptcy, reorganization or other insolvency proceeding would be required to assume West Penn's obligations.

Wheeling Power Company (70–9487)

Wheeling Power Company (''Wheeling''), 51 16th Street, Wheeling, West Virginia 26003, an electric public utility subsidiary company of American Electric Power Company, Inc., a registered holding company, has filed a declaration under sections 6(a) and 7 of the Act and rule 54 under the Act.

Wheeling proposes to issue and sell or place from time to time, through June 30, 2000, unsecured promissory notes (''Notes'') in an aggregate outstanding principal amount of not more than $10 million. The Notes will have terms of not less than nine months nor more than ten years from the date of borrowing. The Notes will be sold to, or placed through, one or more commercial banks, financial institutions or other institutional investors (''Lender''). The Notes will be issued under one or more term loan agreements with the Lenders.

The Notes will bear interest at a fixed rate, a fluctuating rate or some combination of the two. Fixed interest rates will not be greater than 300 basis points about the yield, at the time of issuance of the Notes, to maturity of United States Treasury obligations with comparable maturities. Fluctuating interest rates will not be greater than 200 basis points above the periodically announced base or prime rate of a major bank.

Proceeds from the sale of the Notes will be used to repay Wheeling's long- and short-term debt. At December 31, 1998, Wheeling's outstanding short-term indebtedness was approximately $5.2 million.

Sempra Energy (70–9489)

Sempra Energy (''Sempra''), 101 Ash Street, San Diego, California 92101, a California public utility holding company exempt from registration under section 3(a)(1) of the Act from all provisions of the Act except section 9(a)(2), has filed an application under sections 9(a)(2) and 10 of the Act, in connection with a proposed acquisition of K N Energy (''K N''), a ''gas utility company'' within the meaning of section 2(a)(4) of the Act, that is directly engaged in retail natural gas distribution operation in three states (''Transaction'').

Sempra indirectly owns all of the issued and outstanding common stock of Southern California Gas Company (''SoCalGas''), a gas utility company, and San Diego Gas and Electric Company (''SDG&E''), a combination gas and electric utility company.

SoCalGas distributes gas at retail to approximately 4.8 million customers within a service territory of 23,000 square miles in central and southern California. The SoCalGas system includes approximately 2,900 miles of transmission and storage pipeline, 44,000 miles of distribution pipeline 43,000 miles of service pipeline, and 10 compressor stations, as well as five underground storage reservoirs with a combined working capacity of about 116 billion cubic feet (''Bcf'').

SDG&E is engaged in the generation, transmission, distribution, and sale of electricity and the distribution and sale of natural gas. SDG&E services approximately 1.2 million electricity customers within a franchised service territory that includes San Diego County and southern Orange County, California. SDG&E currently operates fossil fuel-fired generating units with an aggregate capacity of 1,924 MW. This generation consists of two steam stations, Encina (965 MW) and South Bay (706 MW), and 17 non-power plant combustion turbines (253 MW).[5] SDG&E also owns

[4] Special Purpose LLC will be capitalized, in an amount of at least 0.5% of the total principal amount of the Transition Bonds, through some form of a capital contribution by Newco.

[5] In November 1997, SDG&E committed itself to divesting all of its fossil fuel-fired generating capacity by the end of 1999. SDG&E was

a 20% share (430MW) of the San Onofre Nuclear Generating Station (''SONGS''). SDG&E has announced its intention to divest itself of SONGS, but has not yet concluded any agreement to do so.

In addition to providing electric service, SDG&E provides natural gas service to more than 700,000 customers in San Diego County. SDG&E's natural gas facilities include 164 miles of transmission pipeline, 6,843 miles of distribution pipeline, and two compressor stations. All of the gas delivered to SDG&E by its suppliers is transported through the SoCalGas pipeline system.

SoCalGas and SDG&E derive substantially all of their gas requirements from sources outside of California. In 1998, SoCalGas and SDG&E purchased approximately 49% of their combined system gas requirements from production in the San Juan Basin, which is located primarily in New Mexico and Colorado, approximately 20% in the Permian Basin, which is located in west Texas, approximately 18% in the Western Canada Sedimentary Basin, which is located primarily in western Alberta and most of the balance from marketers at the California border. A substantial volume of gas produced in the Rocky Mountain region basins[6] is also delivered into the SoCalGas transmission system for redelivery to SoCalGas's transportation-only customers.

SoCalGas and SDG&E are subject to regulation by the California Public Utilities Commission (''California PUC'').

Sempra also owns approximately 90% of Frontier Energy, LLC (''Frontier Energy''), a North Carolina limited liability company that is completing construction of a new gas utility distribution system in a four-county area of western North Carolina.[7]

Sempra's principal nonutility subsidiaries include: Sempra Trading, which is a marketer of natural gas, electricity, and other energy products; Enova Energy, Inc. which is a marketer of electricity; Sempra Energy Resources, which is an unregulated subsidiary engaged in the business of acquiring and developing power plants and natural gas storage, production, and transportation assets in support of other Sempra subsidiaries; Sempra Energy Solutions, which is a retail marketing subsidiary providing energy services and products at retail to competitive energy markets in California and throughout the United States; Sempra Energy International, which is engaged in the construction, ownership and operation of natural gas distribution and power generation projects outside the United States; Sempra Energy Financial, which participates in tax-advantaged investments such as affordable housing and alternative fuels; and Sempra Energy Utility Ventures, which engages in the acquisition, development and operation of regulated energy utilities in the eastern United States and Canada.

For the year ended December 31, 1998, Sempra reported consolidated operating revenues of $5.525 billion, of which $2.772 billion represented gas utility revenues (including revenues from transporting customer-owned gas) and $1.865 billion represented electric revenues. At December 31, 1998, Sempra had total assets of $10.465 billion, of which $5.441 billion represented net utility (electric and gas) plant. During 1998, the total gas delivered on the Sempra system was 962 Bcf, of which 521 Bcf (or about 54%) represented deliveries of customer-owned gas for which the company provides only transportation service. Electric sales in 1998 totaled 17,955 kwhrs.

K N and its subsidiaries engage in natural gas gathering, processing, storage, transportation, distribution, and marketing of natural gas, natural gas liquids and electric power in 16 central and western states, with the majority of its operations in Texas, Oklahoma, Kansas, Nebraska, Colorado, Wyoming and Illinois.[8]

K N is directly engaged in the distribution of natural gas at retail to more than 210,000 customers in mostly rural areas of Nebraska, Colorado, and Wyoming through a system of 7,200 miles of distribution pipelines. It distributes gas in these three states directly through a corporate division that is referred to as the ''Retail Gas Division.'' In Colorado, the Retail Gas Division provides retail service to approximately 47,400 residential, commercial, industrial, irrigation and grain drying customers in more than 30 towns in the western slope of Colorado, 4 towns north of Denver in the Front Range area, and 11 towns in the northeast corner of the state.

In Wyoming, the Retail Gas Division provides gas service to approximately 64,700 residential, commercial and irrigation customers in 40 towns in the eastern and central parts of the state. In Nebraska, the Retail Gas Division serves approximately 99,700 residential, commercial, industrial and agricultural customers in 180 towns throughout much of the state.

The Retail Gas Division purchases all of its gas supplies from gas marketers, including K N Services, Inc. (''K N Services''), K N's principal gas marketer. Most of this gas is produced in the Rocky Mountain region basins (currently about 61%) and the Anadarko/Arkoma Basin (currently about 29%). The company also purchases gas that is produced in the San Juan Basin, the Western Canada Sedimentary Basin, and in producing areas in Montana, Kansas and western Nebraska.

For the year ended December 31, 1998, the Retail Gas Division reported total operating revenues of $222.8 million, net operating revenues of $104.7 million, and net income of $11.9 million, respectively. At December 31, 1998, the Retail Gas Division had total assets of $290.2 million, including $165.5 million in net utility plant and equipment, $37.5 million in advances to associate companies, and $51.1 million in current assets. During 1998, the Retail Gas Division delivered only 50 Bcf of gas.

K N conducts its other business activities through its nonutility subsidiaries. K N is principally engaged in interstate and intrastate pipeline transportation, gathering and production, and marketing, among other nonutility businesses.

For the year ended December 31, 1998, K N reported consolidated operating revenues of $4.388 billion, of which $222.8 million (or about 5.1%) were derived from the distribution of gas at retail. At December 31, 1998, K N had total assets of $9.612 billion, including $7.023 billion of net property, plant and equipment, of which $165.5 million (or about 2.4% of the total) consists of net plant associated with K N's retail gas distribution business.

In accordance with an Agreement and Plan of Merger dated February 20, 1999 (''Merger Agreement''), among Sempra , K N and Cardinal Acquisition Corp.

subsequently required to divest its Encina and South Bay plants by the terms of a Stipulation and Order entered into with the Department of Justice in March 1998. On December 11, 1998, SDG&E concluded separate agreements for the sale of the South Bay station, the Encina station and the 17 combustion turbines.

[6] The Rocky Mountain region describes a producing area that is generally understood to include, in whole or in part, the Unita/Piceance Basin in eastern Utah and western Colorado, the Denver/Julesberg Basin in Colorado, and the Powder River, Green River, and Wind River Basins in Wyoming.

[7] *See* Sempra Energy, Holding Co. Act Release No. 26971 (February 1, 1999).

[8] K N and its subsidiaries operate more than 26,000 miles of interstate, intrastate and offshore transmission pipelines, approximately 11,000 miles of gathering and processing pipelines, approximately 7,000 miles of local gas distribution pipelines, 16 storage facilities, and 19 natural gas processing plants with a total processing capacity of approximately 1.7 Bcf per day.

(''Cardinal''), a wholly owned, special purpose California corporation organized by Sempra for the purpose of carrying out the Transaction, K N will be merged with and into Cardinal.[9] Upon completion of the merger, Cardinal will be renamed ''K N Energy, Inc.'' All of the property, rights, privileges, immunities, powers and franchises of K N before the merger will vest in Cardinal and all of the debts, liabilities and duties of K N before the merger will become the debts, liabilities and duties of Cardinal.

On the effective date of the merger, each share of K N's common stock (''K N Shares'') will be converted, at the election of the holder thereof, into the right to receive 1.115 shares of Sempra's common stock (''Sempra Shares''), or $25.00 in cash, or a combination of Sempra Shares and cash, for each K N Share. This ratio represents a blended premium of 24 percent to the market price of K N Shares, based on the average closing price of the stock of each company during the week immediately preceding conclusion of the Merger Agreement. Shareholders of K N have the option to choose cash, Sempra Shares, or a combination of the two, subject to proration, such that at least 70% of the K N Shares outstanding will be converted into Sempra Shares and not more than 30% of the K N Shares will be converted into cash. As a result of the Transaction, K N will become a wholly owned subsidiary of Sempra, and the former K N shareholders will own approximately 19% of Sempra's outstanding common stock after the merger, based on the number of shares of Sempra's common stock and K N's common stock outstanding on March 16, 1999. Under the terms of the Merger Agreement, three members of K N's board of directors will become members of Sempra's board, which will have 17 members.

Applicant contends that, after giving effect to the Transaction, Sempra will remain predominantly an intrastate (i.e., California) holding company that will not derive any material part of its income from any non-California public-utility operations. Applicant states that the utility operations of Sempra in California are substantially larger than those of K N's Retail Gas Division and Frontier Energy combined. Accordingly, Sempra requests an order under section 3(a)(1) of the Act declaring Sempra, after consummation of the Transaction, to be exempt from all sections of the Act except section 9(a)(2).

For the Commission, by the Division of Investment Management, under delegated authority.

Margaret H. McFarland,

Deputy Secretary.

[FR Doc. 99–12232 Filed 5–13–99; 8:45 am]

BILLING CODE 8010–01–M

[9] The approval and adoption of the Merger Agreement requires the affirmative vote of the holders of a majority of the shares of K N common stock and the affirmative vote of the holders of a majority of the shares of Sempra common stock. Consummation of the Transaction is also subject to various regulatory approvals in addition to the approval of this Commission, including the Colorado Public Utilities Commission, the Wyoming Public Service Commission and the Federal Energy Regulatory Commission. The Transaction is also subject to the filing of Pre-Merger Notification Report Forms under the Hart-Scott-Rodino Antitrust Improvements Act of 1976 and the expiration or early termination of the required waiting period.

SECURITIES AND EXCHANGE COMMISSION

[Release Nos. 34–41385; File No. 265–21]

Establishment of Advisory Committee on Technology

AGENCY: Securities and Exchange Commission.

ACTION: Notice.

SUMMARY: The Chairman of the Commission, with the concurrence of the other members of the Commission, has established the Securities and Exchange Commission Advisory Committee on Technology (''Committee'') that will advise the Commission regarding how technological advances have impacted the markets, how market professionals and investors use technology to interact in our markets, and how the Commission's regulatory, examination, enforcement, and internal programs and operations can more effectively use technology and respond to changes in technology.

ADDRESSES: Written comments should be submitted in triplicate and should refer to File No. 265–21. Comments should be submitted to Jonathan G. Katz, Secretary, Securities and Exchange Commission, 450 Fifth Street, NW., Washington, DC 20549–0609.

FOR FURTHER INFORMATION CONTACT: Jonathan G. Katz, Secretary, at 202–942–7070; Securities and Exchange Commission, 450 Fifth Street, N.W., Washington, D.C. 20549–0609.

SUPPLEMENTARY INFORMATION: In accordance with the requirements of the Federal Advisory Committee Act, 5 U.S.C. App., the Securities and Exchange Commission has directed publication of this notice that Chairman Arthur Levitt, with the concurrence of the other members of the Commission, has established the ''Securities and Exchange Commission Advisory Committee on Technology.'' Chairman Levitt certifies that he has determined that the creation of the Committee is necessary and in the public interest.

The Committee's charter directs the Committee to: (i) Assist the Commission in evaluating the impact of technology on our markets, market participants and investors, (ii) examine how investors and market professionals interact in our markets, (iii) identify ways in which the Commission's regulatory, examination, enforcement, and internal programs and operations can more effectively use technology and respond to changes in technology, and (iv) provide technical advice on technology issues affecting the Commission and its programs and on ways technology can be used to improve efficiency in the Commission's programs and operations, from the perspective of investors, issuers, the various market participants, technology experts, and other interested persons and regulatory authorities.

To achieve the Committee's goals, members will be appointed who can represent effectively the varied interests affected by the range of issues to be considered. The Committee's membership may include, among others, persons who can represent investors, issuers, market participants, regulators and the public at large. The Commission expects that the Committee's members will represent a variety of viewpoints and have varying experience, and that the Committee will be fairly balanced in terms of points of view, backgrounds and tasks.

The Committee will conduct its operations in accordance with the provisions of the Federal Advisory Committee Act. The duties of the Committee will be solely advisory. Determinations of action to be taken and policy to be expressed with respect to matters upon which the Advisory Committee provides advice or recommendations shall be made solely by the Commission.

The Committee will meet at such intervals as are necessary to carry out its functions. It is expected that meetings of the full Committee generally will occur no more frequently than 4 times per year; meetings of subgroups of the full Advisory Committee will likely occur more frequently. The Securities and Exchange Commission will provide necessary support services to the Committee.

The Committee will terminate at the end of 2 years from the date of its establishment unless, prior to such time, its charter is renewed in accordance with the Federal Advisory Committee

Act, or unless the Chairman, with the concurrence of the other members of the Commission, determines that continuance of the Committee is no longer in the public interest.

Fifteen days after publication of this notice in the **Federal Register**, a copy of the charter of the Committee will be filed with the Chairman of the Commission, the Senate Committee on Banking, Housing, and Urban Affairs and the House Committee on Commerce. A copy of the charter will also be furnished to the Library of Congress and placed in the Commission's Public Reference Room for public inspection.

By the Commission.

Dated: May 10, 1999.

Jonathan G. Katz,

Secretary.

[FR Doc. 99–12233 Filed 5–13–99; 8:45 am]

BILLING CODE 8010–01–M

SECURITIES AND EXCHANGE COMMISSION

Sunshine Act Meeting

Notice is hereby given, pursuant to the provisions of the Government in the Sunshine Act, Pub. L. 94–409, that the Securities and Exchange Commission will hold the following meeting during the week of May 10, 1999.

A closed meeting will be held on Thursday, May 13, 1999, at 11:00 a.m.

Commissioners, Counsel to the Commissioners, the Secretary to the Commission, and recording secretaries will attend the closed meeting. Certain staff members who have an interest in the matters may also be present.

The General Counsel of the Commission, or his designee, has certified that, in his opinion, one or more of the exemptions set forth in 5 U.S.C. 552b(c)(4), (8), (9)(A) and (10) and 17 CFR 200.402(a)(4), (8), (9)(i) and (10), permit consideration of the scheduled matters at the closed meeting.

Commissioner Hunt, as duty officer, voted to consider the items listed for the closed meeting in a closed session.

The subject matter of the closed meeting scheduled for Thursday, May 13, 1999, at 11:00 a.m. will be:

Institution of injunctive actions.
Settlement of injunctive actions.
Institution of administrative proceedings of an enforcement nature.

At times, changes in Commission priorities require alterations in the scheduling of meeting items. For further information and to ascertain what, if any, matters have been added, deleted or postponed, please contact:

The Office of the Secretary at (202) 942–7070.

Dated: May 11, 1999.

Margaret H. McFarland,

Deputy Secretary.

[FR Doc. 99–12341 Filed 5–12–99; 12:25 pm]

BILLING CODE 8010–01–M

SMALL BUSINESS ADMINISTRATION

[Declaration of Disaster #3177]

State of Illinois and Contiguous Counties in Iowa and Missouri

Cass and Hancock Counties and the contiguous counties of Adams, Brown, Henderson, Mason, McDonough, Menard, Morgan, Sangamon, and Schuyler in Illinois; Lee County, Iowa; and Clark and Lewis Counties in Missouri constitute a disaster area as a result of damages caused by severe storms and tornadoes that occurred on April 8, 1999. Applications for loans for physical damages as a result of this disaster may be filed until the close of business on July 6, 1999 and for economic injury until the close of business on February 4, 2000 at the address listed below or other locally announced locations:

U.S. Small Business Administration, Disaster Area 2 Office, One Baltimore Place, Suite 300, Atlanta, GA 30308

The interest rates are:

	Percent
For Physical Damage:	
HOMEOWNERS WITH CREDIT AVAILABLE ELSEWHERE	6.875
HOMEOWNERS WITHOUT CREDIT AVAILABLE ELSEWHERE	3.437
BUSINESSES WITH CREDIT AVAILABLE ELSEWHERE	8.000
BUSINESSES AND NON-PROFIT ORGANIZATIONS WITHOUT CREDIT AVAILABLE ELSEWHERE	4.000
OTHERS (INCLUDING NON-PROFIT ORGANIZATIONS) WITH CREDIT AVAILABLE ELSEWHERE	7.000
For Economic Injury:	
BUSINESSES AND SMALL AGRICULTURAL COOPERATIVES WITHOUT CREDIT AVAILABLE ELSEWHERE	4.000

The numbers assigned to this disaster for physical damage are 317712 for Illinois, 317812 for Iowa, and 317912 for Missouri. For economic injury the numbers are 9C7200 for Illinois, 9C7300 for Iowa, and 9C7400 for Missouri.

(Catalog of Federal Domestic Assistance Program Nos. 59002 and 59008)

Dated: May 4, 1999.

Fred P. Hochberg,

Acting Administrator.

[FR Doc. 99–12213 Filed 5–13–99; 8:45 am]

BILLING CODE 8025–01–P

SMALL BUSINESS ADMINISTRATION

Revocation of License of Small Business Investment Company

Pursuant to the authority granted to the United States Small Business Administration by the Final Order of the United States District Court for the Southern District of Texas, Houston Division, entered February 11, 1999, the United States Small Business Administration hereby revokes the license of Enterprise Capital Corporation, a Texas corporation, to function as a small business investment company under the Small Business Investment Company License No. 06/10–0154 issued to Enterprise Capital Corporation on May 8, 1970, and said license is hereby declared null and void as of April 12, 1999.

Dated: April 29, 1999.

United States Small Business Administration.

Don A. Christensen,

Associate Administrator for Investment.

[FR Doc. 99–12216 Filed 5–13–99; 8:45 am]

BILLING CODE 8025–01–P

SMALL BUSINESS ADMINISTRATION

[License No. 07/07–0098]

Enterprise Fund, L.P.; Notice of Surrender of License

Notice is hereby given that Enterprise Fund, L.P., 7400 West 110th Street, Suite 560, Overland Park, Kansas 66210, has surrendered its license to operate as a small business investment company under the Small Business Investment Act of 1958, as amended (the Act). Enterprise Fund, L.P. was licensed by the Small Business Administration on May 14, 1996.

Under the authority vested by the Act and pursuant to the regulations promulgated thereunder, the surrender was effective as of April 30, 1999, and accordingly, all rights, privileges, and franchises derived therefrom have been terminated.

(Catalog of Federal Domestic Assistance Program No. 59.011, Small Business Investment Companies)

Dated: May 5, 1999.

Don A. Christensen,

Associate Administrator for Investment.

[FR Doc. 99–12214 Filed 5–13–99; 8:45 am]

BILLING CODE 8025–01–P

SMALL BUSINESS ADMINISTRATION

[License No. 05/05–0212]

Polaris Capital Corporation; Notice of Surrender of License

Notice is hereby given that Polaris Capital Corporation, 2100 Northwestern Avenue, Racine, Wisconsin 53404, has surrendered their license to operate as a small business investment company under the Small Business Investment Act of 1958, as amended (the Act). Polaris Capital Corporation was licensed by Small Business Administration on February 9, 1990.

Under the authority vested by the Act and pursuant to the Regulations promulgated thereunder, the surrender was accepted on this date, and accordingly, all rights, privileges, and franchises derived therefrom have been terminated.

(Catalog of Federal Domestic Assistance Program No.59.11, Small Business Investment Companies)

Dated: April 29, 1999.

Don A. Christensen,

Associate Administrator for Investment.

[FR Doc. 99–12215 Filed 5–13–99; 8:45 am]

BILLING CODE 8025–01–P

SOCIAL SECURITY ADMINISTRATION

Agency Information Collection Activities: Emergency Consideration Request

In compliance with Pub. L. 104–13, the Paperwork Reduction Act of 1995, SSA is providing notice of its information collections that require submission to the Office of Management and Budget (OMB). SSA is requesting emergency consideration from OMB by May 21, 1999 of the information collection listed below.

Annual Registration Statement Identifying Separated Participants with Deferred Benefits, Schedule SSA—0960–NEW (1999 edition). Schedule SSA is a form filed annually by pension plan administrators as part of a series of pension plan documents required by section 6057 of the IRS Code. SSA maintains the information until a claim for Social Security benefits has been approved. At that time, SSA notifies the beneficiary of his/her potential eligibility for payments from private pension plans.

On September 3, 1997, the Pension and Welfare Benefits Administration (PWBA), the Internal Revenue Service (IRS) and the Pension Benefit Guaranty Corporation (PBGC) collectively published a notice requesting comments on the burden hour estimates and the methodologies used to estimate burden for preparing and filing Form 5500 and its schedules, including Schedule SSA. The comments generally indicated that the estimates were too low. In an effort to respond to those comments, an evaluation of the burden estimation methodologies has been undertaken for the purpose of developing a revised, uniform methodology. The evaluation has not yet been completed. Therefore, for the purposes of this notice, SSA is providing burden estimates using the current methodology. A decision regarding the burden methodology to be used is expected to be made by the end of May 1999. SSA will modify these burden estimates based on a revised methodology.

Number of Respondents: 107,174.

Frequency of Response: Annually.

Average Burden Per Response: 17 minutes.

Estimated Annual Burden: 69,842 hours.

A computerized processing system (the ERISA filing and Acceptance System, or EFAST) is being developed to simplify and expedite the processing of the Form 5500 series, including Schedule SSA, by relying on computer scannable forms and electronic filing technologies. A **Federal Register** notice will be published announcing the opportunity to comment on the electronic filing options and computer scannable forms designed as part of the EFAST project. The final computer scannable version of the forms, which will be required to be used for 1999 plan years, will be published in the **Federal Register** following the evaluation of public comments.

PWBA, IRS and PBGC have obtained OMB clearance for the 1999 Form 5500 and their respective schedules. It is essential that Schedule SSA be on the same timeline as the Form 5500 and other schedules so that there is a coordinated effort in making changes in burden methodology and in the format and processing of the forms. Therefore, we are requesting emergency consideration for Schedule SSA.

You can obtain a copy of the collection instrument and/or OMB clearance package by calling the SSA Reports Clearance Officer on (410) 965–4145, or by writing to him.

(SSA Address)

Social Security Administration, DCFAM, Attn: Frederick W. Brickenkamp, 6401 Security Blvd., 1–A–21 Operations Bldg., Baltimore, MD 21235

Date: May 7, 1999.

Frederick W. Brickenkamp,

Reports Clearance Officer, Social Security Administration.

[FR Doc. 99–12171 Filed 5–13–99; 8:45 am]

BILLING CODE 4190–29–U

SOCIAL SECURITY ADMINISTRATION

Agency Information Collection Activities: Proposed Request and Comment Request

In compliance with Public Law 104–13, the Paperwork Reduction Act of 1995, the Social Security Administration (SSA) is providing notice of its information collections that require submission to the Office of Management and Budget (OMB). SSA is soliciting comments on the accuracy of the agency's burden estimate; the need for the information; its practical utility; ways to enhance its quality, utility and clarity; and on ways to minimize burden on respondents, including the use of automated collection techniques or other forms of information technology.

I. The information collections listed below will be submitted to OMB within 60 days from the date of this notice. Therefore, comments and recommendations regarding the information collections would be most useful if received by the Agency within 60 days from the date of this publication. Comments should be directed to the SSA Reports Clearance Officer at the address listed at the end of this publication. You can obtain a copy of the collection instruments by calling the SSA Reports Clearance Officer on (410) 965–4145, or by writing to him at the address listed at the end of this publication.

1. Marriage Certification—0960–0009. Form SSA–3 is used by the Social Security Administration (SSA) to determine whether the spouse's claimant has the necessary relationship to the worker as required by section 216 (h)(1) of the Social Security Act (the Act). The respondents are applicants for Spouse's Benefits.

Number of Respondents: 180,000.

Frequency of Response: 1.

Average Burden Per Response: 5 minutes.

Estimated Annual Burden: 15,000 hours.

2. Claimant's Work Background—0960–0300. The information collected on Form HA–4633 is used by SSA in

cases in which claimants for disability benefits have requested a hearing on the decision regarding their claim, which is a statutory right granted to claimants under the Act. A completed form provides an updated summary of a claimant's past relevant work and helps the Administrative Law Judge better decide whether or not the claimant is disabled. The respondents are claimants who request a hearing on entitlement to disability benefits, under titles II and/or XVI of the Act.

Number of Respondents: 120,000.

Frequency of Response: 1.

Average Burden Per Response: 15 minutes.

Estimated Annual Burden: 30,000 hours.

3. Report on Individual with Childhood Impairment—0960–0084. Form SSA–1323 is used by SSA to determine the claimant's medical status prior to making disability determinations. The respondents are public and nonpublic schools and agencies who provide status reports on claimants applying for disability benefits.

Number of Respondents: 7,000.

Frequency of Response: 1.

Average Burden Per Response: 20 minutes.

Estimated Annual Burden: 2,333 hours.

4. Medicare Buy-In Part B Screening Guide—0960–0601. Pub. L. 105–277 authorizes SSA to conduct a Medicare buy-in demonstration project to evaluate means to promote the Medicare buy-in programs targeted to elderly and disabled individuals under titles XVIII and XIX of the Social Security Act. A lack of awareness about the Medicare buy-in programs appears to be one of the major obstacles to enrollments. Other obstacles to enrollment include the confusion of potential eligibles as to how to apply for these programs and a preference for dealing with SSA field offices rather than with local Medicaid offices.

SSA will screen respondents voluntarily for potential Medicare Part B buy-in eligibility using a screening guide developed for this purpose. The screening guide will collect information from SSA beneficiaries regarding income, resources, marital status, and living arrangements and also ask questions about their awareness of Medicare Part B buy-in programs. SSA will gather this information to identify and overcome obstacles to Medicare Part B buy-in enrollments and to determine potential eligibility for Medicare Part B benefits. The screening guide will be in use from March 1, 1999 through December 31, 1999.

Number of Respondents: 130,000.

Frequency of Response: 1.

Average Burden Per Response: 20 minutes.

Estimated Annual Burden: 43,334 hours.

5. Supplemental Security Income Notice of Interim Assistance Reimbursement (two forms)—0960–0546. Please note that these forms were previously approved under 2 OMB numbers, form SSA–8125—0960–0546 and form SSA–L8125–F6—0960–0563. However, because these forms are interrelated, SSA is combining them under 0960–0546. Forms SSA–8125 and SSA–L8125–F6 collect interim assistance reimbursement (IAR) information from the States that provide such assistance. Form SSA–8125 is used in situations where IAR can be distributed directly to the recipient after the State has deducted the amount of assistance it provided. Form SSA–L8125–F6 is used in situations where a recipient entitled to underpayments has received IAR from a state and SSA will control the benefit through the installment process. The respondents are states that provide IAR to Supplemental Security Income (SSI) claimants.

	SSA–8125	SSA–L8125–F6
Number of Respondents	50,000	50,000.
Frequency of Response	1	1.
Average Burden Per Response	10 minutes	10 minutes.
Estimated Annual Burden	8,333 hours	8,333 hours.

6. State Report of Incorrect Bendex Information—0960–0517. SSA uses the information collected on Form SSA–1086 to correct its master database and to facilitate the electronic exchange of data. The respondents are State agencies administering programs for Aid to Families with Dependent Children.

Number of Respondents: 123.

Frequency of Response: 2.

Average Burden Per Response: 10 minutes.

Estimated Annual Burden: 41 hours.

II. The information collections listed below have been submitted to OMB for clearance. Written comments and recommendations on the information collections would be most useful if received within 30 days from the date of this publication. Comments should be directed to the SSA Reports Clearance Officer and the OMB Desk Officer at the addresses listed at the end of this publication. You can obtain copies of the OMB clearance packages by calling the SSA Reports Clearance Officer on (410) 965–4145, or by writing to him.

1. Request for Hearing—0960–0269. The information collected on form HA–501 is used by SSA to process a request for hearing on an unfavorable determination of entitlement or eligibility to benefits administered by SSA. The respondents are individuals whose claims for benefits are denied and who request a hearing on the denial.

Number of Respondents: 554,100.

Frequency of Response: 1.

Average Burden Per Response: 10 minutes.

Estimated Average Burden: 92,350 hours.

2. Petition to Obtain Approval of a Fee for Representing a Claimant Before The Social Security Administration—0960–0104. SSA uses form SSA–1560 if the representative files a fee petition to obtain approval of a fee for representing a claimant. The representative must file either a fee petition or a fee agreement with SSA in order to charge for representing a claimant in proceedings before the Agency. The information is reviewed by SSA to determine a reasonable fee for the representative's services. The respondents are attorneys and other persons representing Social Security claimants.

Number of Respondents: 34,624.

Frequency of Response: 1.

Average Burden Per Response: 30 minutes.

Estimated Average Burden: 17,312 hours.

3. Letter to Landlord Requesting Rental Information—0960–0454. Form SSA–L5061 is used by SSA to provide a nationally uniform vehicle for collecting information from landlords in making a rental subsidy determination in the SSI Program. The responses are used in deciding whether income limits are met. The respondents are landlords who provide subsidized rental arrangements to SSI applicants and recipients.

Number of Respondents: 49,000.

Frequency of Response: 1.

Average Burden Per Response: 10 minutes.

Estimated Average Burden: 8,167 hours.

4. Farm Arrangement Questionnaire—0960–0064. SSA needs the information collected on form SSA–7157–F4 to determine if farm rental income may be considered self-employment income for Social Security coverage purposes. The respondents are individuals alleging self-employment income from renting land for farming activities.

Number of Respondents: 38,000.

Frequency of Response: 1.

Average Burden Per Response: 30 minutes.

Estimated Average Burden: 19,000 hours.

5. State Contribution Return—0960–0041. SSA uses the information on form SSA 3961 to identify and account for all contributions owed and paid, under section 218 of the Social Security Act. The data is used to balance each deposit made by a State and to allocate the deposited contributions by specific liability. The form is ultimately used to provide audit statements to State agencies and to perform Trust Fund accounting. The respondents are State Social Security agencies (one agency in each state, Puerto Rico, and the Virgin Islands) and each of approximately 65 interstate instrumentalities.

Number of Respondents: 10,000.

Frequency of Response: 1.

Average Burden Per Response: 3 minutes.

Estimated Average Burden: 500 hours.

(SSA Address)

Social Security Administration, DCFAM, Attn: Frederick W. Brickenkamp, 6401 Security Blvd., 1–A–21 Operations Bldg., Baltimore, MD 21235

(OMB Address)

Office of Management and Budget, OIRA, Attn: Lori Schack, New Executive Office Building, Room 10230, 725 17th St., NW.,

Washington, DC 20503

Dated: May 6, 1999.

Frederick W. Brickenkamp,

Reports Clearance Officer, Social Security Administration.

[FR Doc. 99–12172 Filed 5–13–99; 8:45 am]

BILLING CODE 4190–29–P

DEPARTMENT OF STATE

Office of the Secretary

[Public Notice 3054]

Determination and Certification Under Section 40A of the Arms Export Control Act

Pursuant to Section 40A of the Arms Export Control Act (Public Law 90–629), as added by the Antiterrorism and Effective Death Penalty Act of 1996 (Public Law 104–132) (22 U.S.C. 2771 *et seq.*), and Executive Order 11958, as amended, I hereby determine and certify to the Congress that the following countries are not cooperating fully with United States antiterrorism efforts:

Afghanistan;
Cuba;
Iran;
Iraq;
Libya;
North Korea;
Sudan; and
Syria.

This determination and certification shall be transmitted to the Congress and published in the **Federal Register**.

Dated: May 6, 1999.

Strobe Talbott,

Acting Secretary of State.

[FR Doc. 99–12259 Filed 5–13–99; 8:45 am]

BILLING CODE 4710–10–U

DEPARTMENT OF TRANSPORTATION

Federal Aviation Administration

Notice of Intent To Rule on Application To Impose and Use the Revenue From a Passenger Facility Charge (PFC) at Mobile Regional Airport, Mobile, AL

AGENCY: Federal Aviation Administration (FAA), DOT.

ACTION: Notice of intent to rule on application.

SUMMARY: The FAA proposes to rule and invites public comment on the application to impose and use the revenue from a PFC at Mobile Regional Airport under the provisions of the Aviation Safety and Capacity Expansion Act of 1990 (Title IX of the Omnibus Budget Reconciliation Act of 1990) (Pub. L. 101–508) and Part 158 of the Federal Aviation Regulations (14 CFR Part 158).

DATES: Comments must be received on or before June 14, 1999.

ADDRESSES: Comments on this application may be mailed or delivered in triplicate to the FAA at the following address: 120 North Hangar Drive, Suite B, Jackson, Mississippi 39208–2306.

In addition, one copy of any comments submitted to the FAA must be mailed or delivered to Mr. Roger Engstrom, Director of Aviation, of the Mobile Airport Authority at the following address: Mobile Airport Authority, Post Office Box 88004, Mobile, AL 36608–0004.

Air carriers and foreign air carriers may submit copies of written comments previously provided to the Mobile Airport Authority under § 158.23 of Part 158.

FOR FURTHER INFORMATION CONTACT: Keafur Grimes, Program Manager, Jackson Airports District Office, 120 North Hangar Drive, Suite B, Jackson, Mississippi 39208–2308, (601) 965–4628. The application may be reviewed in person at this same location.

SUPPLEMENTARY INFORMATION: The FAA proposes to rule and invites public comments on the application to impose and use the revenue from a PFC at Mobile Regional Airport under the provisions of the Aviation Safety and Capacity Expansion Act of 1990 (Title IX of the Omnibus Budget Reconciliation Act of 1990) (Pub. L. 101–508) and Part 158 of the Federal Aviation Regulations (14 CFR Part 158).

On May 4, 1999, the FAA determined that the application to impose and use the revenue from a PFC submitted by Mobile Airport Authority was substantially complete within the requirements of section 158.25 of Part 158. The FAA will approve or disapprove the application, in whole or in part, no later than August 26, 1999.

The following is a brief overview of the application.

PFC Application No.: 99–03–C–00–MOB.

Level of the proposed PFC: $3.00.

Proposed charge effective date: December 1, 1999.

Proposed charge expiration date: September 30, 2005.

Total estimated PFC revenue: $5,799,289.

Brief description of proposed project(s): Acquire Passenger Ramp, Land Acquisition, Acquire Airport Beacon, Rehabilitate Taxiways, Rehabilitate Runway 14/32, Upgrade Airport Security System, Acquire Aircraft Air Bags and Passenger Shuttle, and Construct Aviation Ramp.

Class or classes of air carriers which the public agency has requested not be required to collect PFCs: Air Taxi/Commercial Operators (ATCO) filing FAA Form 1800–31.

Any person may inspect the application in person at the FAA office listed above under **FOR FURTHER INFORMATION CONTACT.**

In addition, any person may, upon request, inspect the application, notice and other documents germane to the application in person at the Mobile Airport Authority.

Issued in Jackson, Mississippi on May 4, 1999.

William D. Shumate,

Acting Manager, Jackson Airports District Office, Southern Region.

[FR Doc. 99–12278 Filed 5–13–99; 8:45 am]

BILLING CODE 4910–13–M

DEPARTMENT OF TRANSPORTATION

Surface Transportation Board

[STB Docket No. MC–F–20945]

Coach USA, Inc., and Yellow Cab Service Corporation—Control—Ross Tours, Inc. [STB Docket No. MC–F–20946] [1]; Coach USA, Inc.—Control—2948–7238 Quebec Inc

AGENCY: Surface Transportation Board.

ACTION: Notice tentatively approving finance transactions.

SUMMARY: Coach USA, Inc. (Coach), a noncarrier, and its wholly owned noncarrier subsidiaries Yellow Cab Service Corporation (Yellow Cab) and Coach Canada, Inc. (Coach Canada), filed an application [2] under 49 U.S.C. 14303 for Coach and Yellow Cab to acquire control of Ross Tours, Inc. (Ross), and for Coach and Coach Canada to acquire control of 2948–7238 Quebec Inc., d/b/a Visite Touristique de Quebec (VTQ). Persons wishing to oppose the applications must follow the rules under 49 CFR 1182.5 and 1182.8.[3] The Board has tentatively approved the transactions, and, if no opposing comments are timely filed, this notice will be the final Board action.

DATES: Comments must be filed by June 28, 1999. Applicants may file a reply by July 13, 1999. If no comments are filed by June 28, 1999, this notice is effective on that date.

ADDRESSES: Send an original and 10 copies of any comments referring to STB Docket No. MC–F–20945, *et al.* to: Surface Transportation Board, Office of the Secretary, Case Control Unit, 1925 K Street, N.W., Washington, DC 20423–0001. In addition, send one copy of comments to applicants' representatives: Betty Jo Christian and David H. Coburn, Steptoe & Johnson LLP, 1330 Connecticut Avenue, N.W., Washington, DC 20036.

FOR FURTHER INFORMATION CONTACT: Beryl Gordon, (202) 565–1600. [TDD for the hearing impaired: (202) 565–1695).]

SUPPLEMENTARY INFORMATION: In *Coach USA, Inc., and Coach USA North Central, Inc.—Control—Nine Motor Passenger Carriers,* STB Docket No. MC–F–20931, *et al.* (STB served Nov. 19, 1998),[4] we approved, subject to comments, Coach's transfer of direct control of its operating motor passenger carrier subsidiaries to six noncarrier subsidiaries: Coach USA North Central, Inc., Coach USA Northeast, Inc., Coach USA South Central, Inc., Coach USA Southeast, Inc., Coach USA West, Inc., and Yellow Cab. The published tentative grants of authority in these proceedings were scheduled to become effective on January 4, 1999, unless opposing comments were filed by that date. On January 4, 1999, Ground Systems, Inc., d/b/a Airport Bus filed comments in opposition to the control applications in STB Docket Nos. MC–F–20931, MC–F–20932, MC–F–20933, MC–F–20934, MC–F–20935, and MC–F–20937. No comments in opposition were filed in STB Docket No. MC–F–20936, in which Coach and Yellow Cab sought control of four motor passenger carriers, so that grant of authority became effective on January 4, 1999.[5]

In *Coach USA, Inc. and Coach Canada, Inc.—Control and Continuance in Control—Autocar Connaisseur, Inc., Erie Coach Lines Company, and Trentway-Wagar, Inc.,* STB Docket No. MC–F–20938 (STB served Dec. 17, 1998), we approved, subject to comments, Coach Canada's [6] control of Autocar Connaisseur, Inc. (Autocar),[7] and Erie Coach Lines Company, and for continuance in control of Trentway-Wagar, Inc.

In STB Docket No. MC–F–20945, Coach and Yellow Cab seek control of Ross.[8] In STB Docket No. MC–F–20946, Coach and Coach Canada seek control of VTQ.[9] The acquisition of control of Ross will be accomplished through stock ownership. According to Coach, the stock of Ross has been placed in an independent voting trust pending disposition of this proceeding. Coach states that it acquired VTQ in the same December 1996 stock transaction in which it acquired control of Autocar, a Quebec-based carrier that is part of the same corporate family as VTQ. Coach states that, while most of VTQ's operations are in Quebec, Coach and Coach Canada have now become aware that VTQ also holds federally issued operating authority in the United States. Having discovered this unresolved control issue, Coach and Coach Canada now seek Board authority to control this carrier.

Applicants submit that there will be no transfer of any federal or state operating authorities held by the carriers to be acquired. Following the consummation of the control transactions, each of the carriers will continue operating in the same manner as before and, according to Coach, granting the applications will not reduce competitive options available to the traveling public. Applicants assert that the carriers to be acquired do not compete to any meaningful degree with one another and that each faces substantial competition from other bus companies and transportation modes.

[1] These proceedings are not consolidated. A single decision is being issued for administrative convenience;

[2] Applicants filed a single pleading. Although the proposed control transactions are unrelated, applicants seek approval in a single application which embraced both transactions. Each transaction has been separately docketed.

[3] Revised procedures governing finance applications filed under 49 U.S.C. 14303 were adopted in *Revisions to Regulations Governing Finance Applications Involving Motor Passenger Carriers,* STB Ex Parte No. 559 (STB served Sept. 1, 1998).

[4] A single decision was issued for administrative convenience that included STB Docket Nos. MC–F–20931, MC–F–20932, MC–F–20933, MC–F–20934, MC–F–20935, MC–F–20936, and MC–F–20937.

[5] Coach and Yellow Cab state that the tentative grant of authority in STB Docket No. MC–F–20936 was vacated because comments were filed in response to the application. The statement is incorrect.

[6] Coach Canada is a wholly owned subsidiary of Coach that was established for the purpose of obtaining direct control of Canada-based motor passenger carriers that Coach currently controls or may seek to control in the future.

[7] Autocar subsequently merged with three other affiliated noncarrier entities, the parent of which is 3329003 Canada, Inc., a noncarrier owned by Coach. *See Coach USA, Inc. and Coach Canada, Inc.—Control—Autocar Connaisseur, Inc.,* STB Docket No. MC–F–20943 (STB served Jan. 27, 1999).

[8] Ross is a Mississippi corporation. It holds federally issued operating authority in Docket No. MC–175674, which authorizes it to provide charter and special services between points in the United States. It specializes in operations in the Biloxi, MS area, where it provides charter services, including airport shuttle services. It also holds authority issued by the Mississippi Public Utility Commission to conduct intrastate operations. It operates 6 buses; employs 7 persons; and earned annual revenues in fiscal year 1998 of approximately $406,000. In addition, it operates a fleet of taxicabs and holds federally issued authority to conduct operations as a common carrier of property, although it does not presently engage in any such operations.

[9] VTQ is a Quebec corporation. It holds federally issued operating authority in Docket No. MC–302514, which authorizes it to provide special and charter operations between points in the United States. It also holds a variety of operating authorities issued by Canadian authorities. VTQ focuses its operations on charter and sightseeing services provided in the Quebec City area. On occasion, it provides charter transportation between points in Quebec and points in the Eastern United States. It operates a fleet that ranges up to approximately 25 buses which vary in size depending on the season; employs up to 40 persons during peak season periods; and earned annual revenues in fiscal year 1998 of $2.6 million.

Applicants submit that granting the applications will produce, or continue to produce, substantial benefits, including interest cost savings from the restructuring of debt and reduced operating costs from Coach's enhanced volume purchasing power. Specifically, applicants claim that each carrier will benefit from the lower insurance premiums negotiated by Coach or its subsidiaries and from volume discounts for equipment and fuel. Applicants indicate that the respective subsidiary will provide each of the carriers to be acquired with management services, such as centralized legal and accounting functions and coordinated purchasing services. In addition, applicants state that vehicle sharing arrangements will be facilitated through Coach and its subsidiaries to ensure maximum use and efficient operation of equipment and that coordinated driver training services will be provided. Applicants also state that the proposed transactions will have no adverse impacts on the employees of Ross and VTQ and that Coach Canada and Yellow Cab will honor all collective bargaining agreements.

Applicants assert that, by further decentralizing certain management functions, they will be better able to plan equipment utilization, develop financial plans and coordinate other short- and long-term operational strategies best designed to meet the specific and unique needs of carriers operating in a particular region of the country, and their customers. Specifically, Coach Canada and Yellow Cab will each maintain a database of the assets, including the vehicles operated by each of the operating carriers, which will allow the management of Coach Canada and Yellow Cab to more effectively deploy vehicles, resulting in more timely and efficient service to the traveling public. Further, Coach Canada and Yellow Cab will coordinate the safety and compliance programs of the carriers they control, with the object of maintaining and raising safety performance levels for each of the operating carriers.

Coach anticipates that Coach Canada and Yellow Cab will be well-positioned to aid in the assessment of possible future acquisitions of motor passenger carriers in the particular area in which they function. According to Coach, Coach Canada and Yellow Cab will be able to make those assessments in view of the operations of the carriers under their control and with a view toward developing and carrying out a strategic growth plan. Over the longer term, Coach, Coach Canada and Yellow Cab will provide centralized marketing and will further enhance the benefits resulting from these acquisitions.

Coach certifies that: (1) the jurisdictional threshold has been met with respect to the transactions that are the subject of the applications;[10] (2) neither Ross nor VTQ has been rated for safety by the U.S. Department of Transportation; (3) each of the acquired carriers has sufficient liability insurance; (4) neither Ross nor VTQ is domiciled in Mexico or owned or controlled by persons of that country; and (5) approval of the transactions will not significantly affect either the quality of the human environment or the conservation of energy resources. Additional information may be obtained from the applicants' representatives.

Under 49 U.S.C. 14303(b), we must approve and authorize a transaction we find consistent with the public interest, taking into consideration at least: (1) the effect of the transaction on the adequacy of transportation to the public; (2) the total fixed charges that result; and (3) the interest of affected carrier employees. The prior consummation of the transaction involving VTQ does not bar approval of the application in STB Docket No. MC–F–20946 under section 14303 if the evidence establishes that the transaction would be consistent with the public interest in other respects, and for the future.[11]

On the basis of the applications, we find that the proposed acquisitions of control are consistent with the public interest and should be authorized. If any opposing comments are timely filed, this finding will be deemed vacated and, unless a final decision can be made on the record as developed, a procedural schedule will be adopted to reconsider the applications.[12] If no opposing comments are filed by the expiration of the comment period, this decision will take effect automatically and will be the final Board action.

Board decisions and notices are available on our website at ''WWW.STB.DOT.GOV.''

This decision will not significantly affect either the quality of the human environment or the conservation of energy resources.

It is ordered:

1. The proposed acquisitions of control are approved and authorized, subject to the filing of opposing comments.

2. If timely opposing comments are filed, the findings made in this decision will be deemed as having been vacated.

3. This decision will be effective on June 28, 1999, unless timely opposing comments are filed.

4. A copy of this notice will be served on: (1) the U.S. Department of Transportation, Office of Motor Carriers-HIA 30, 400 Virginia Avenue, S.W., Suite 600, Washington, DC 20004; and (2) the U.S. Department of Justice, Antitrust Division, 10th Street & Pennsylvania Avenue, N.W., Washington, DC 20530.

Decided: May 10, 1999.

By the Board, Chairman Morgan, Vice Chairman Clyburn, and Commissioner Burkes.

Vernon A. Williams,

Secretary.

[FR Doc. 99–12255 Filed 5–13–99; 8:45 am]

BILLING CODE 4915–00–P

[10] *See* 49 CFR 1182.2(a)(5).

[11] Applicants, Coach and Coach Canada, seek *nunc pro tunc* approval of the control of VTQ. While we are granting our tentative approval, the need for retroactive effect has not been demonstrated. Applicants evidently recognize that they should have sought our approval sooner but, under the circumstances, the Board does not intend to pursue enforcement actions against applicants for previously unauthorized common control.

[12] Under revised 49 CFR 1182.6(c), a procedural schedule will not be issued if we are able to dispose of opposition to the application on the basis of comments and the reply.

DEPARTMENT OF TRANSPORTATION

Surface Transportation Board

[STB Finance Docket No. 33745]

Delaware and Hudson Railway Company d/b/a Canadian Pacific Railway—Trackage Rights Exemption—Norfolk Southern Railway Company

Norfolk Southern Railway Company (NS) has agreed to grant overhead trackage rights to Delaware and Hudson Railway d/b/a Canadian Pacific Railway (D&H) over NS's trackage described as: (1) the Harrisburg Line, between the connection with the Pittsburgh Line at CP Harris, at or near milepost 112.9, in Harrisburg, PA, and CP Walnut, at or near milepost 58.6, in Reading, PA, a distance of approximately 54.3 miles; (2) the Reading Line, between the connection with the Harrisburg Line at CP Wyomissing Jct., at or near milepost 9.4, and the connection with the Reading Belt Branch at CP Valley, Jct., at or near milepost 8.7, all in Reading, a distance of approximately 0.7 miles; and (3) the Reading Belt Branch, between CP Cumru, at or near milepost 11.0, in Reading, and CP Bird, at or near milepost 18.5, in Birdsboro, PA, a distance of approximately 7.5 miles.

The transaction is scheduled to be consummated on May 31, 1999.

The trackage rights will permit D&H to connect its current trackage rights at

Harrisburg to its current trackage rights at Reading to permit fluid through movements between CP Kase, PA, and the Philadelphia, PA area.

As a condition to this exemption, any employees affected by the trackage rights will be protected by the conditions imposed in *Norfolk and Western Ry. Co.—Trackage Rights—BN*, 354 I.C.C. 605 (1978), as modified in *Mendocino Coast Ry., Inc.—Lease and Operate*, 360 I.C.C. 653 (1980).

This notice is filed under 49 CFR 1180.2(d)(7). If it contains false or misleading information, the exemption is void *ab initio*. Petitions to revoke the exemption under 49 U.S.C. 10502(d) may be filed at any time. The filing of a petition to revoke will not automatically stay the transaction.

An original and 10 copies of all pleadings, referring to STB Finance Docket No. 33745, must be filed with the Surface Transportation Board, Office of the Secretary, Case Control Unit, 1925 K Street, N.W., Washington, DC 20423–0001. In addition, a copy of each pleading must be served on Diane P. Gerth, Esq., Leonard, Street and Deinard, 150 South Fifth Street, Minneapolis, MN 55402.

Board decisions and notices are available on our website at ''WWW.STB.DOT.GOV.''

Decided: May 6, 1999.

By the Board, David M. Konschnik, Director, Office of Proceedings.

Vernon A. Williams,

Secretary.

[FR Doc. 99–12114 Filed 5–13–99; 8:45 am]

BILLING CODE 4915–00–P

DEPARTMENT OF TRANSPORTATION

Surface Transportation Board

[STB Finance Docket No. 33745]

Delaware and Hudson Railway Company d/b/a Canadian Pacific Railway—Trackage Rights Exemption—Norfolk Southern Railway Company

Norfolk Southern Railway Company (NS) has agreed to grant overhead trackage rights to Delaware and Hudson Railway d/b/a Canadian Pacific Railway (D&H) over NS's trackage described as: (1) the Harrisburg Line, between the connection with the Pittsburgh Line at CP Harris, at or near milepost 112.9, in Harrisburg, PA, and CP Walnut, at or near milepost 58.6, in Reading, PA, a distance of approximately 54.3 miles; (2) the Reading Line, between the connection with the Harrisburg Line at CP Wyomissing Jct., at or near milepost 9.4, and the connection with the Reading Belt Branch at CP Valley, Jct., at or near milepost 8.7, all in Reading, a distance of approximately 0.7 miles; and (3) the Reading Belt Branch, between CP Cumru, at or near milepost 11.0, in Reading, and CP Bird, at or near milepost 18.5, in Birdsboro, PA, a distance of approximately 7.5 miles.

The transaction is scheduled to be consummated on May 31, 1999.

The trackage rights will permit D&H to connect its current trackage rights at Harrisburg to its current trackage rights at Reading to permit fluid through movements between CP Kase, PA, and the Philadelphia, PA area.

As a condition to this exemption, any employees affected by the trackage rights will be protected by the conditions imposed in *Norfolk and Western Ry. Co.—Trackage Rights—BN*, 354 I.C.C. 605 (1978), as modified in *Mendocino Coast Ry., Inc.—Lease and Operate*, 360 I.C.C. 653 (1980).

This notice is filed under 49 CFR 1180.2(d)(7). If it contains false or misleading information, the exemption is void *ab initio*. Petitions to revoke the exemption under 49 U.S.C. 10502(d) may be filed at any time. The filing of a petition to revoke will not automatically stay the transaction.

An original and 10 copies of all pleadings, referring to STB Finance Docket No. 33745, must be filed with the Surface Transportation Board, Office of the Secretary, Case Control Unit, 1925 K Street, N.W., Washington, DC 20423–0001. In addition, a copy of each pleading must be served on Diane P. Gerth, Esq., Leonard, Street and Deinard, 150 South Fifth Street, Minneapolis, MN 55402.

Board decisions and notices are available on our website at ''WWW.STB.DOT.GOV.''

Decided: May 6, 1999.

By the Board, David M. Konschnik, Director, Office of Proceedings.

Vernon A. Williams,

Secretary.

[FR Doc. 99–12263 Filed 5–13–99; 8:45 am]

BILLING CODE 4915–00–P

DEPARTMENT OF TRANSPORTATION

Surface Transportation Board

[STB Finance Docket No. 33743]

Pioneer Railcorp—Acquisition of Control Exemption—The Garden City Western Railway, Inc.

Pioneer Railcorp (Pioneer), a noncarrier holding company, has filed a notice of exemption to acquire control of The Garden City Western Railway, Inc. (GCW), a Class III rail carrier, operating in the State of Kansas.[1]

The transaction was scheduled to be consummated on or shortly after May 7, 1999.

Pioneer currently controls fourteen existing shortline rail carriers, thirteen directly and one indirectly.[2]

Pioneer states that: (i) the railroads do not connect with each other; (ii) the transaction is not part of a series of anticipated transactions that would connect the railroads with each other; and (iii) the transaction does not involve a Class I carrier. Therefore, the transaction is exempt from the prior approval requirements of 49 U.S.C. 11323. *See* 49 CFR 1180.2(d)(2).

Under 49 U.S.C. 10502(g), the Board may not use its exemption authority to relieve a rail carrier of its statutory obligation to protect the interests of its employees. Section 11326(c), however, does not provide for labor protection for transactions under sections 11324 and 11325 that involve only Class III rail carriers. Because this transaction involves Class III rail carriers only, the Board, under the statute, may not impose labor protective conditions for this transaction.

If the notice contains false or misleading information, the exemption is void *ab initio*. Petitions to revoke the exemption under 49 U.S.C. 10502(d) may be filed at any time. The filing of a petition to revoke will not automatically stay the transaction.

An original and 10 copies of all pleadings, referring to STB Finance Docket No. 33743, must be filed with the Surface Transportation Board, Office of the Secretary, Case Control Unit, 1925 K Street, N.W., Washington, DC 20423–0001. In addition, a copy of all pleadings must be served on John D. Heffner, Esq., Rea, Cross & Auchincloss, 1707 L Street, N.W., Suite 570, Washington, DC 20036.

Board decisions and notices are available on our website at ''WWW.STB.DOT.GOV.''

Decided: May 7, 1999.

---

[1] *See The Garden City CO-OP, Inc.—Acquisition and Operation Exemption—Between Garden City and Wolf, in Finney County, KS*, Finance Docket No. 30091 (ICC served Dec. 30, 1982) and *The Garden City CO-OP, Inc.—Corporate Family Transaction Exemption—The Garden City Western Railway Co. and The Garden City Northern Railway Co.*, Finance Docket No. 31861 (ICC served May 8, 1991).

[2] *See Pioneer Railcorp and Wabash & Western Railway Co.—Acquisition of Control Exemption—Michigan Southern Railroad Co., Inc.*, STB Finance Docket No. 33704 (STB served Jan. 28, 1999).

By the Board, David M. Konschnik, Director, Office of Proceedings.

Vernon A. Williams,

Secretary.

[FR Doc. 99–12261 Filed 5–13–99; 8:45 am]

BILLING CODE 4915–00–P

DEPARTMENT OF TRANSPORTATION

Surface Transportation Board

[STB Finance Docket No. 33741]

Port of Tillamook Bay Railroad—Trackage Rights Exemption—Portland & Western Railroad, Inc.

Portland & Western Railroad, Inc. (PNWR) has agreed to grant trackage rights to Port of Tillamook Bay Railroad (POTB) over 3.5 miles of rail line between Banks (milepost 774.0) and Schefflin (milepost 770.5), in Washington County, OR (subject line).[1]

The parties report that they intend to consummate the transaction on or after May 6, 1999, or upon the authorization of PNWR's lease of the subject line, whichever is later. The earliest the transaction can be consummated is May 10, 1999, the effective date of the exemption (7 days after the exemption was filed).

The purpose of the trackage rights is to permit POTB to continue its existing service.

Under 49 U.S.C. 10502(g), the Board may not use its exemption authority to relieve a rail carrier of its statutory obligation to protect the interests of its employees. Section 11326(c), however, does not provide for labor protection for transactions under sections 11324 and 11325 that involve only Class III rail carriers. Because this transaction involves Class III rail carriers only, the Board, under the statute, may not impose labor protective conditions for this transaction.

This notice is filed under 49 CFR 1180.2(d)(7). If it contains false or misleading information, the exemption is void *ab initio.* Petitions to revoke the exemption under 49 U.S.C. 10502(d) may be filed at any time. The filing of a petition to revoke will not automatically stay the transaction.

An original and 10 copies of all pleadings, referring to STB Finance Docket No. 33741, must be filed with the Surface Transportation Board, Office of the Secretary, Case Control Unit, 1925 K Street, N.W., Washington, DC 20423–0001. In addition, a copy of each pleading must be served on E. Andrew Jordan, Esq., Tarlow, Jordan & Schrader, P.O. Box 230669, Portland, OR 97281–0669.

Board decisions and notices are available on our website at ''WWW.STB.DOT.GOV.''

Decided: May 10, 1999.

By the Board, David M. Konschnik, Director, Office of Proceedings.

Vernon A. Williams,

Secretary.

[FR Doc. 99–12260 Filed 5–13–99; 8:45 am]

BILLING CODE 4915–00–P

[1] This transaction is related to *Portland & Western Railroad, Inc.—Lease and Operation Exemption—Port of Tillamook Bay Railroad,* STB Finance Docket No. 33734 (STB served May 14, 1999), wherein the subject line is being leased by POTB to PNWR to permit rehabilitation of the line by PNWR. The effective date of the exemption in STB Finance Docket No. 33734 is May 10, 1999.

DEPARTMENT OF TRANSPORTATION

Surface Transportation Board

[STB Finance Docket No. 33734]

Portland & Western Railroad, Inc.—Lease and Operation Exemption—Port of Tillamook Bay Railroad

Portland & Western Railroad, Inc. (PNWR), a Class III rail carrier, has filed a verified notice of exemption under 49 CFR 1150.41 to lease and operate approximately 3.5 miles of rail line (rail line) currently owned and operated by Port of Tillamook Bay Railroad (POTB) between Banks (milepost 774.0) and Schefflin (milepost 770.5), in Washington County, OR. In addition, the notice states that POTB will retain ''incidental'' trackage rights over the rail line and will continue to serve all of its current customers through a grant back of trackage rights by PNWR to POTB.[1]

Because PNWR's projected annual revenues will exceed $5 million, PNWR has certified to the Board on April 16, 1999, that the required notice of the transaction was posted at the workplace of the employees on the affected lines on April 2, 1999. *See* 49 CFR 1150.42(e).[2] The transaction was scheduled to be consummated on or about April 19, 1999, or as soon thereafter as possible, depending upon the Board's action on PNWR's waiver request.

If the notice contains false or misleading information, the exemption is void *ab initio.* Petitions to revoke the exemption under 49 U.S.C. 10502(d) may be filed at any time. The filing of a petition to revoke does not automatically stay the transaction.

An original and 10 copies of all pleadings, referring to STB Finance Docket No. 33734, must be filed with the Surface Transportation Board, Office of the Secretary, Case Control Unit, 1925 K Street, N.W., Washington, DC 20423–0001. In addition, a copy of each pleading must be served on Eric M. Hocky, Esq., Gollatz, Griffin & Ewing, P.C., 213 West Miner Street, P. O. Box 796, West Chester, PA 19381–0796.

Board decisions and notices are available on our website at ''WWW.STB.DOT.GOV.''

Decided: May 10, 1999.

By the Board, David M. Konschnik, Director, Office of Proceedings.

Vernon A. Williams,

Secretary.

[FR Doc. 99–12262 Filed 5–13–99; 8:45 am]

BILLING CODE 4915–00–P

[1] PNWR currently operates over the rail line pursuant to trackage rights. *See Portland & Western Railroad, Inc.—Lease and Operation Exemption—Burlington Northern Railroad Company,* Finance Docket No. 32766 (STB served Jan. 5, 1996). PNWR states that it has an opportunity to route certain traffic in a more efficient manner to Portland, OR, over two of its lines and the rail line between points south of Schefflin and Portland. PNWR further states that, before substantial amounts of traffic can be routed in this way, the rail line must be substantially rehabilitated and brought up to Federal Railway Administration Class 2 condition. Because of POTB's relatively light density of its traffic over the rail line, it is unwilling to incur the costs to rehabilitate the rail line. PNWR is unwilling to incur the cost of rehabilitation under the current operating arrangement. Thus, PNWR and POTB have entered into an agreement whereby PNWR will lease and rehabilitate the rail line and POTB will retain trackage rights over the rail line. It should be noted, however, that the grant back of trackage rights by POTB to PNWR cannot properly be termed ''incidental'' to the lease transaction. The term ''incidental'' trackage rights (as it relates to a lease transaction) pertains to simultaneous rights being obtained by a lessee to operate over other lines of a lessor or lines of another carrier. POTB thus requires separate approval for the trackage rights. On May 3, 1999, POTB made a separate filing to invoke the class exemption at 49 CFR 1180.2(d)(7) for the trackage rights. *See Port of Tillamook Bay Railroad—Trackage Rights Exemption—Portland & Western Railroad, Inc.,* STB Finance Docket No. 33741 (STB served May 14, 1999).

[2] Under 49 CFR 1150.42(e), the exemption would not normally take effect until 60 days after certification to the Board that the requisite notice had been given. PNWR initially sought waiver of the notice requirements itself. Subsequently, notice was given to employees of POTB and the certification was made. As a result, the waiver request was modified to one seeking relief that would permit the exemption to take effect without having to wait for the full 60 days after the April 16 certification to run. In the absence of a waiver, the earliest the lease could be consummated would be June 15, 1999. In a decision in this proceeding served on May 10, 1999, the Board has waived, in part, the 60-day notice period, thus allowing consummation to occur as early as May 10, 1999.

DEPARTMENT OF THE TREASURY

Internal Revenue Service

Proposed Collection; Comment Request for Form 1040PC

AGENCY: Internal Revenue Service (IRS), Treasury.

ACTION: Notice and request for comments.

SUMMARY: The Department of the Treasury, as part of its continuing effort to reduce paperwork and respondent burden, invites the general public and other Federal agencies to take this opportunity to comment on proposed and/or continuing information collections, as required by the Paperwork Reduction Act of 1995, Pub. L. 104–13 (44 U.S.C. 3506(c)(2)(A)). Currently, the IRS is soliciting comments concerning Form 1040PC, U.S. Individual Income Tax Return 1040PC Format.

DATES: Written comments should be received on or before July 13, 1999 to be assured of consideration.

ADDRESSES: Direct all written comments to Garrick R. Shear, Internal Revenue Service, room 5571, 1111 Constitution Avenue NW., Washington, DC 20224.

FOR FURTHER INFORMATION CONTACT: Requests for additional information or copies of the form and instructions should be directed to Carol Savage, (202) 622–3945, Internal Revenue Service, room 5569, 1111 Constitution Avenue NW., Washington, DC 20224.

SUPPLEMENTARY INFORMATION:

Title: U.S. Individual Income Tax Return 1040PC Format.

OMB Number: 1545–1309.

Form Number: Form 1040PC.

Abstract: Form 1040PC is a computer-generated tax return answer sheet format prepared by tax preparation software. Form 1040PC is an alternative method of filing Form 1040. It offers direct deposit for taxpayers to have their refunds deposited into their personal savings or checking accounts by electronic funds transfer. It also generates a pre-printed payment voucher for use when payment is due to the IRS.

Current Actions: There are no changes being made to the form at this time.

Type of Review: Extension of a currently approved collection.

Affected Public: Individuals or households.

Estimated Number of Respondents: 7,502,722.

Estimated Time Per Respondent: 15 minutes.

Estimated Total Annual Burden Hours: 1,875,681.

The following paragraph applies to all of the collections of information covered by this notice:

An agency may not conduct or sponsor, and a person is not required to respond to, a collection of information unless the collection of information displays a valid OMB control number.

Books or records relating to a collection of information must be retained as long as their contents may become material in the administration of any internal revenue law. Generally, tax returns and tax return information are confidential, as required by 26 U.S.C. 6103.

Request for Comments

Comments submitted in response to this notice will be summarized and/or included in the request for OMB approval. All comments will become a matter of public record. Comments are invited on: (a) whether the collection of information is necessary for the proper performance of the functions of the agency, including whether the information shall have practical utility; (b) the accuracy of the agency's estimate of the burden of the collection of information; (c) ways to enhance the quality, utility, and clarity of the information to be collected; (d) ways to minimize the burden of the collection of information on respondents, including through the use of automated collection techniques or other forms of information technology; and (e) estimates of capital or start-up costs and costs of operation, maintenance, and purchase of services to provide information.

Approved: May 6, 1999.

Garrick R. Shear,

IRS Reports Clearance Officer.

[FR Doc. 99–12169 Filed 5–13–99; 8:45 am]

BILLING CODE 4830–01–P

DEPARTMENT OF THE TREASURY

Internal Revenue Service

[REG–209837–96]

Proposed Collection; Comment Request for Regulation Project

AGENCY: Internal Revenue Service (IRS), Treasury.

ACTION: Notice and request for comments.

SUMMARY: The Department of the Treasury, as part of its continuing effort to reduce paperwork and respondent burden, invites the general public and other Federal agencies to take this opportunity to comment on proposed and/or continuing information collections, as required by the Paperwork Reduction Act of 1995, Pub. L. 104–13 (44 U.S.C. 3506(c)(2)(A)). Currently, the IRS is soliciting comments concerning an existing final regulation, REG–209837–96, TD 8742, Requirements Respecting the Adoption or Change of Accounting Method; Extensions of Time To Make Elections (§§ 301.9100–2 and 301.9100–3).

DATES: Written comments should be received on or before July 13, 1999 to be assured of consideration.

ADDRESSES: Direct all written comments to Garrick R. Shear, Internal Revenue Service, room 5571, 1111 Constitution Avenue NW., Washington, DC 20224.

FOR FURTHER INFORMATION CONTACT: Requests for additional information or copies of the regulation should be directed to Carol Savage, (202) 622–3945, Internal Revenue Service, room 5569, 1111 Constitution Avenue NW., Washington, DC 20224.

SUPPLEMENTARY INFORMATION:

Title: Requirements Respecting the Adoption or Change of Accounting Method; Extensions of Time To Make Elections.

OMB Number: 1545–1488.

Regulation Project Number: REG–209837–96.

Abstract: This final regulation provides the procedures for requesting an extension of time to make certain elections, including changes in accounting method and accounting period. In addition, the regulation provides the standards that the IRS will use in determining whether to grant taxpayers extensions of time to make these elections.

Current Actions: There is no change to this existing regulation.

Type of Review: Extension of a currently approved collection.

Affected Public: Business or other for-profit organizations, individuals, not-for-profit institutions, and farms.

Estimated Number of Respondents: 500.

Estimated Time Per Respondent: 10 hours.

Estimated Total Annual Burden Hours: 5,000.

The following paragraph applies to all of the collections of information covered by this notice:

An agency may not conduct or sponsor, and a person is not required to respond to, a collection of information unless the collection of information displays a valid OMB control number. Books or records relating to a collection of information must be retained as long as their contents may become material in the administration of any internal revenue law. Generally, tax returns and tax return information are confidential, as required by 26 U.S.C. 6103.

Request for Comments

Comments submitted in response to this notice will be summarized and/or included in the request for OMB approval. All comments will become a matter of public record. Comments are invited on: (a) whether the collection of information is necessary for the proper performance of the functions of the agency, including whether the information shall have practical utility; (b) the accuracy of the agency's estimate of the burden of the collection of information; (c) ways to enhance the quality, utility, and clarity of the information to be collected; (d) ways to minimize the burden of the collection of information on respondents, including through the use of automated collection techniques or other forms of information technology; and (e) estimates of capital or start-up costs and costs of operation, maintenance, and purchase of services to provide information.

Approved: May 6, 1999.

Garrick R. Shear,

IRS Reports Clearance Officer.

[FR Doc. 99–12170 Filed 5–13–99; 8:45 am]

BILLING CODE 4830–01–P

DEPARTMENT OF THE TREASURY

Internal Revenue Service

Advisory Committee for Electronic Tax Administration

AGENCY: Internal Revenue Service (IRS), Treasury.

ACTION: Request for nominations.

SUMMARY: The Electronic Tax Administration Advisory Committee (ETAAC), was established to provide continued input into the development and implementation of the Internal Revenue Service's (IRS') strategy for electronic tax administration. The ETAAC provides an organized public forum for discussion of electronic tax administration issues in support of the overriding goal that paperless filing should be the preferred and most convenient method of filing tax and information returns. ETAAC members convey the public's perception of IRS electronic tax administration activities, offer constructive observations about current or proposed policies, programs, and procedures, and suggest improvements. This document seeks nominations of individuals to be considered for selection as Committee members.

The Assistant Commissioner (Electronic Tax Administration) will assure that the size and organizational representation of the ETAAC obtains balanced membership and includes representatives from various groups including: (1) tax practitioners and preparers, (2) transmitters of electronic returns, (3) tax software developers, (4) large and small businesses, (5) employers and payroll service providers, (6) individual taxpayers, (7) financial industry (payers, payment options and best practices), (8) system integrators (technology providers), (9) academic (marketing, sales or technical perspectives), (10) trusts and estates, (11) tax exempt organizations, and (12) state and local governments. We are soliciting nominations from professional and public interest groups, IRS officials, the Department of Treasury, and Congress. Members will be limited to serving one two-year term on the ETAAC to ensure that new perspectives and ideas are generated by the members. All travel expenses within government guidelines will be reimbursed.

DATES: Written nominations must be received on or before June 14, 1999.

ADDRESSES: Nominations should be sent to Robin Marusin, OP:ETA, Room 7331 IR, 1111 Constitution Ave., N.W., Washington, D.C. 20224. Application forms can be obtained from Robin Marusin, who can be reached on (202) 622–8184.

FOR FURTHER INFORMATION CONTACT: Robin Marusin, 202–622–8184.

SUPPLEMENTARY INFORMATION: The ETAAC will provide continued input into the development and implementation of the IRS's strategy for electronic tax administration. The ETAAC members will convey the public's observations about current or proposed policies, programs, and procedures, and suggest improvements.

This activity is based on the authority to administer the Internal Revenue laws conferred upon the Secretary of the Treasury by section 7802 of the Internal Revenue Code and delegated to the Commissioner of the Internal Revenue.

The ETAAC will research, analyze, consider, and make recommendations on a wide range of electronic tax administrations issues and will provide input into the development and implementation of the strategic plan for electronic tax administration.

Nominations should describe and document the proposed member's qualifications for membership to the Committee. Equal opportunity practices will be followed in all appointments to the Committee. To ensure that the recommendations of the Committee have taken into account the needs of the diverse groups served by the Department, membership will include, to the extent practicable, individuals, with demonstrated ability to represent minorities, women, and persons with disabilities.

Terence H. Lutes,

Acting Assistant Commissioner, Electronic Tax Administration.

[FR Doc. 99–12168 Filed 5–13–99; 8:45 am]

BILLING CODE 4830–01–U

Corrections

Federal Register

Vol. 64, No. 93

Friday, May 14, 1999

This section of the FEDERAL REGISTER contains editorial corrections of previously published Presidential, Rule, Proposed Rule, and Notice documents. These corrections are prepared by the Office of the Federal Register. Agency prepared corrections are issued as signed documents and appear in the appropriate document categories elsewhere in the issue.

DEPARTMENT OF AGRICULTURE

National Agricultural Statistics Service

Notice of Invitation for Nominations to Advisory Committee on Agriuclture Statistics

Correction

In notice document 99–8381 beginning on page 16693 in the issue of Tuesday, April 6, 1999, make the following correction(s):

1. On page 16693, third column, first line, ''Committed'' should read ''Committee''.

2. On the same page, same column, second line, ''service'' should read ''serve''.

3. On the same page, same column, sixth line, ''Committed'' should read ''Committee''.

4. On page 16694, first column, fifth line, ''side'' should read ''site''.

[FR Doc. C9–8381 Filed 5–13–99; 8:45 am]

BILLING CODE 1505–01–D

FEDERAL DEPOSIT INSURANCE CORPORATION

Agency Information Collection Activities: Submission for OMB Review; Comment Request

Correction

In notice document 99–9493 beginning on page 18911 in the issue of Friday, April 16, 1999, make the following correction:

On page 18912, in the first column, under *Comments*, in the penultimate line ''June 15, 1999'' should read ''May 17, 1999''.

[FR Doc. C9–9493 Filed 5–13–99; 8:45 am]

BILLING CODE 1505–01–D

FEDERAL RESERVE SYSTEM

Agency Information Collection Activities: Announcement of Board Approval Under Delegated Authority and Submission to OMB

Correction

In notice document 99–11489, beginning on page 24650, in the issue of Friday, May 7, 1999, make the following correction:

On page 24651, in the first column, in the 37th line, in the *Effective Date:* paragraph, ''[Insert date 30 days from publication in Federal Register]'' should read ''June 7, 1999.''

[FR Doc. C9–11489 Filed 5–13–99; 8:45 am]

BILLING CODE 1505–01–D

federal register

Friday
May 14, 1999

Part II

Environmental Protection Agency

40 CFR Part 60

Test Methods: Three New Methods for Velocity and Volumetric Flow Rate Determination in Stacks or Ducts; Final and Proposed Rules

ENVIRONMENTAL PROTECTION AGENCY

40 CFR Part 60

[FRL–6337–1]

RIN 2060–AH97

Test Methods: Three New Methods for Velocity and Volumetric Flow Rate Determination in Stacks or Ducts

AGENCY: Environmental Protection Agency (EPA).

ACTION: Direct final rule.

SUMMARY: EPA is taking direct final action to approve three new optional test methods for measuring velocity and volumetric flow rate of flue gas from fossil fuel-fired boilers and turbines. These new methods allow the tester to account for velocity drop-off near the stack or duct wall and the yaw and pitch angles of flow. The primary users of the new methods will be owners and operators of utility units subject to the Acid Rain Program under title IV of the Clean Air Act, and certain large electric generating units and large non-electric generating units that may become subject to the nitrogen oxides (NO_X) state implementation plan (SIP) call under Title I of the Clean Air Act, who must use an approved test method to periodically calibrate the flow rate monitors at these units. Flow rate data is used to determine the units' sulfur dioxide (SO_2) and NO_X mass emissions and heat inputs. The purpose of the Acid Rain Program and the NO_X SIP call is to significantly reduce emissions from electric generating plants and other affected units in order to reduce the adverse health and environmental effects of acid deposition or ground level ozone resulting from these emissions.

The sources affected by this action are primarily in the sector Fossil Fuel Electric Power Generation, North American Industrial Classification System (NAICS) code 221112, or are industrial boilers. The affected sources include U.S. industry establishments primarily engaged in operating fossil fuel powered electric power generation facilities. These facilities use fossil fuels, such as coal, oil, or gas, in boilers and combustion turbines to produce electric energy or steam. The electric energy produced in these establishments are provided to electric power transmission systems or to electric power distribution systems.

DATES: This rule is effective on July 13, 1999 without further notice, unless EPA receives adverse comment by June 14, 1999. or (if a public hearing is requested) by July 1, 1999. If we receive such comment, we will publish a timely withdrawal in the **Federal Register** informing the public that this rule will not take effect.

ADDRESSES: Any written comments must be identified with Docket No. A–99–14, must be identified as comments on the direct final rule and companion proposal and must be submitted in duplicate to: EPA Air Docket (6102), Environmental Protection Agency, 401 M Street, SW, Washington, DC 20460. The docket is available for public inspection and copying between 8:30 a.m. and 3:30 p.m., Monday through Friday, at the address given above. A reasonable fee may be charged for copying. A detailed rationale for today's action is set forth in the Findings Report, which can be obtained by writing to the Air Docket at the address given above.

FOR FURTHER INFORMATION CONTACT: John Schakenbach, Acid Rain Division (6204J), U.S. Environmental Protection Agency, 401 M Street, SW, Washington, DC 20460, (202) 564–9158; or Elliot Lieberman, Acid Rain Division (6204J), U.S. Environmental Protection Agency, 401 M Street, SW, Washington, DC 20460, (202) 564–9136.

SUPPLEMENTARY INFORMATION: EPA is publishing this rule without prior proposal because we view these new test methods as noncontroversial and anticipate no adverse comment. We believe the rule is not controversial for the following reasons: (1) The rule is primarily technical in nature, (2) the rule is generally accepted by the scientific community, and (3) use of the new test methods will be optional. However, we are publishing a separate document that will serve as the proposal to approve the test methods if adverse comments are filed. This rule will be effective on July 13, 1999 without further notice unless we receive adverse comment by June 14, 1999 or (if a public hearing is requested) by July 1, 1999. If EPA receives timely adverse comment, we will publish a withdrawal in the **Federal Register** informing the public that the rule will not take effect. We will address all public comments in a subsequent final rule based on the proposed rule. We will not institute a second comment period on this action. Any parties interested in commenting must do so at this time.

II. Regulated Entities

Entities potentially regulated by this action are utility and industrial fossil fuel-fired boilers and turbines that serve generators producing electricity, generate steam, or cogenerate electricity and steam and that are subject to EPA's monitoring regulations, 40 CFR part 75. While part 75 primarily regulates the electric utility industry, today's action could potentially affect other industries, including those subject to the NO_X SIP call. Regulated categories and entities include:

Category	Examples of regulated entities
NAICS Code: 221112, Fossil Fuel Electric Power Generation	Electric service providers, boilers and turbines from a wide range of industries.

This table is not intended to be exhaustive, but rather provides a guide for readers regarding entities likely to be regulated by this action. This table lists the types of entities which EPA is now aware could potentially be regulated by this action. Other types of entities not listed in the table could also be regulated. To determine whether your facility, company, business, organization, etc., is regulated by this action, you should carefully examine the applicability criteria in §§ 72.6, 72.7, 72.8, 75.70, and Appendix A of part 60 of title 40 of the Code of Federal Regulations. If you have questions regarding the applicability of this action to a particular entity, consult the person listed in the preceding ''For Further Information Contact'' section of this preamble.

II. Background

In 1971, EPA promulgated Method 2 ''Determination of Stack Gas Velocity and Volumetric Flow Rate (Type S Pitot Tube)''. At the time of its development, Method 2 was principally used with EPA Method 5 ''Determination of Particulate Emissions from Stationary Sources'' to help ensure appropriate sampling rates throughout a particulate sampling run.

Many EPA air quality regulations use Method 2, including part 75 of EPA's Acid Rain Program regulations, implementing title IV of the Clean Air

Act (the Act), and part 51 of EPA's NOx SIP call, which may result in states or EPA requiring certain large electric generating units and large non-electric generating units to comply with subpart H of part 75. *See* 40 CFR parts 51 and 75; and 63 FR 57356, 57495, October 27, 1998. Part 75 requires affected electric utility units to install and operate continuous emission monitoring systems that provide EPA with continuous hourly measurements of sulfur dioxide (SO_2) concentration, NO_X concentration, carbon dioxide concentration, and volumetric flow rate of flue gas in a stack or duct. Under the Acid Rain Program, volumetric flow rate and SO_2 concentration are used to calculate sulfur dioxide mass emissions at each affected unit. At the end of each year, these emissions are compared to the unit's sulfur dioxide allowances to determine whether the unit held enough allowances to cover its emissions. Volumetric flow rate is also used to calculate a unit's heat input. In order to ensure the accuracy of compliance determinations, part 75 requires owners and operators of a unit to conduct periodic performance testing of volumetric flow rate monitors by comparing flow rate data from the monitors with data reported using EPA's Method 2. Similarly, subpart H of part 75 uses Method 2 as the reference method for flow rate measurements used to calculate NO_X mass emissions. *See* also 40 CFR part 96.

In the first three years of the Acid Rain Program, the electric utility industry raised concerns that under some flow conditions EPA's approved test method for volumetric flow rate (Method 2) could be less than optimal for measuring flow rate and thus for determining sulfur dioxide emissions and heat input. These concerns focused on situations where flue gas flowed at an angle (i.e., with yaw or pitch), not straight out of a stack or duct. Method 2 does not include procedures for measuring the yaw or pitch angles of flow or wall effects in calculating stack or duct gas velocity or volumetric flow rate.

Volumetric flow rate is calculated by multiplying the average flue gas velocity by the stack or duct cross-sectional area. Yaw and pitch characterize the extent to which flue gas is not flowing straight out of a stack or duct. From the standpoint of a tester facing a vertical stack, a yaw angle is represented by flow movement to the left or right of the stack centerline. The pitch angle is represented by flow movement toward or away from the tester. The term ''wall effects'' refers to the drop-off of flue gas velocity near the inside wall of a stack or duct. This velocity drop-off is caused by friction from the stack wall.

Some amount of yaw and pitch angle and wall effects are almost always present in utility stacks or ducts. Yaw and pitch angles produce flue gas flow that swirls and/or bounces off stack or duct walls (total velocity). Only the straight-up (axial velocity) component of total velocity actually exits the stack. Moreover, determining axial velocity without accounting for the drop-off near the stack or duct wall can result in overstating the actual axial velocity. Thus, when enough yaw, pitch or wall effects are present, Method 2 can overstate the measured flue gas velocities (and thus volumetric flow) because it only allows the total velocity to be measured and does not account for yaw angles, pitch angles, or wall effects. If the test method overstates flow rate, a flow rate monitor calibrated using the test method may also overstate flow rate and result in overstated sulfur dioxide emissions and heat input.

To address these concerns, and to provide a technical basis for potential new test methods, EPA initiated a flow study consisting of wind tunnel tests and field tests. Wind tunnel tests were performed to ensure accurate probe calibrations, to determine probe performance under different temperature conditions (Reynolds number testing), and to determine probe performance under different flow angle conditions (swirl tunnel testing). Probe calibrations were performed at three wind tunnel facilities: the North Carolina State University (NCSU), the National Institute of Standards and Technology, and the Massachusetts Institute of Technology (MIT). The Reynolds number testing was conducted at MIT. The swirl tunnel testing was performed by the Fossil Energy Research Corporation at a special wind tunnel installation developed for the Electric Power Research Institute.

In addition, field tests were performed to evaluate new techniques that could improve the ability to measure flow rate under a wide range of conditions and to provide a technical basis for potential, new test methods. Field tests were performed at two natural gas-fired 750 MWe electric utility boilers and at a 640 MWe bituminous coal-fired utility boiler. These three sites were selected to provide three different flow swirl conditions. Four test teams were used at each site to perform simultaneous testing of various probes. In this manner, probes could be tested under essentially the same conditions. Seven different probes types were tested: Type S, United Sciences Testing Incorporated Autoprobe Type S, Prandtl (Standard Pitot), French, modified Kiel, DAT, and spherical. A Codel flow monitor was also tested.

A special series of tests were also performed to investigate velocity drop-off near stack walls. These wall effects tests were performed at five sites. The sites were selected to provide different inside stack wall material (steel and brick and mortar) and stack gas flow conditions in order to test how these parameters affect stack gas velocity drop-off near the stack wall.

As a result of the wind tunnel tests and field tests, a report describing results of the wind tunnel testing, three Site Data Reports, describing test activities and results at each site, and the Findings Report, describing overall conclusions, were written. These reports are included in the docket. Significant findings from the wind tunnel and field tests are:

- Probes that could determine the yaw and pitch angles of flow produced results closer to those predicted by scientific theory;
- Overall, the Type S, Autoprobe Type S, DAT, and spherical probes produced the best results: they tended to be less variable, did not consistently under-measure velocity, and were closer to theoretically derived results and the central tendency of the data than the other probes tested;
- Automated probes were less variable than manually operated probes;
- Several probes (modified Kiel, and the French) and the Codel flow monitor produced highly variable test results and should not be included in new test methods;
- Measuring wall effects produced a ½% to 3% improvement in volumetric flow rate measurements.
- The amount of wall effect is lower for stacks with smooth interiors (steel) than for stacks with rougher interiors (brick and mortar);
- To produce reliable probe calibrations, wind tunnels should meet certain specifications related to tunnel size and flow conditions;
- Calibration curves for three-dimensional (3–D) probes, i.e., DAT and the spherical probes, are less reliable for velocities below 20 feet per second; and
- Contrary to expectations, scratches on the surface of spherical probes did not significantly effect their calibrations.

We used these data and findings to develop the three new test methods described in today's rulemaking.

Review by independent experts, industry experts, and EPA experts was used in the three major phases of the flow study: The field test plan, the draft Findings Report, and the three draft test

methods. One significant comment by the reviewers was that we should keep the new test methods as effective and practical as possible, but still provide flexibility and a wide range of options for stack testers. Based on reviewer feedback on subsequent versions of the test methods, we believe we have accommodated all major concerns.

III. Approval of Three New Test Methods

Today's direct final rule approves three new test methods that provide probes and procedures to account for yaw angles, pitch angles and wall effects. Method 2G allows Type S probes and 3–D probes (DAT and spherical) to be rotated into the flow to measure total velocity pressure and yaw angle. The yaw angle is used to calculate ''near-axial'' velocity from total velocity. Method 2F allows 3–D probes to be used to measure total velocity, yaw angles, and pitch angle pressure. Pitch angle pressure is used with a calibration curve to determine pitch angle. Yaw and pitch angles are used to calculate axial velocity from total velocity. Method 2H provides a procedure for accounting for wall effects by using either a default wall effects adjustment factor or one derived from near wall measurements. The wall effects adjustment factor is used with the Method 2-, 2G- or 2F-calculated velocity to derive a wall effects adjusted velocity.

In the Acid Rain Program, and in other programs which require reporting of mass emission rates (e.g., lbs NO_x/hour), a capability to measure these parameters in the calculation of volumetric flow rate can improve the reporting of pollutant emissions in some situations (described earlier). In addition, the new test methods in today's rulemaking address the disparity that has sometimes been reported between heat rate calculated using a flow monitor and heat rate calculated using fuel sampling and analysis to the extent that the disparity results from the difficulty of measuring flue gas flow rate under certain flow conditions. This rule does not address the procedures used in fuel sampling or in the calculation of heat rate.

EPA is voluntarily undertaking this regulatory action in response to requests from the regulated community. This regulatory action provides additional accepted scientific and analytical methods for measuring volumetric flow rate in stacks and ducts The additional test methods are the result of extensive field studies that were subjected to review by a panel of independent experts, utility company representatives, and internal EPA staff. These new test methods may be used instead of Method 2 in programs that use part 75 or part 96 procedures to quantify emissions. These new test methods are discussed below in detail.

A. Methods 2F and 2G

Method 2F, ''Determination of Stack Gas Velocity and Volumetric Flow Rate With Three-Dimensional Probes'', is a method for measuring the yaw and pitch angle-adjusted (or axial) velocity with 3-dimensional probes like the prism-shaped, five-hole probe (commonly called a DA or DAT probe) and the five-hole spherical probe. Method 2G, ''Determination of Stack Gas Velocity and Volumetric Flow Rate With Two-Dimensional Probes'', is a variant of existing Method 2 that describes the use of yaw angle determination procedures with Type S or 3-dimensional probes to determine the yaw angle-adjusted flue gas velocity in a stack or duct.

The methods include step-by-step procedures specifically designed to provide quality assured measurements and address a number of key problems uncovered in the course of the wind tunnel and field testing of the new methods. The following summarizes the major steps for performing Method 2F or 2G.

(1) Qualify Wind Tunnel

The wind tunnel tests revealed that some wind tunnels used by vendors or source testers to calibrate probes were inadequate, because they were either too small or did not have uniform flow. To avoid such problems, any wind tunnel used to calibrate probes for Methods 2F or 2G must satisfy certain design and performance specifications to ensure that the flow is axial (straight) and uniform in the wind tunnel calibration location. The wind tunnel must meet two design criteria: (1) The diameter must be at least 12 inches; and (2) the projected area of the tested probe and reference calibration pitot tube must not exceed 4% of the cross-sectional area of the wind tunnel. The wind tunnel must also meet two performance specifications: (1) A velocity pressure cross-check to ensure that the velocity is the same at all locations where the tested and reference probes will be positioned during calibration; and (2) an axial flow verification to ensure that there are no significant yaw or pitch components of flow at these locations. These two tests are performed before the initial use of the wind tunnel and are repeated after any alterations are made to the tunnel.

(2) Prepare To Calibrate Probe

The wind tunnel and field tests also showed that pre-calibration probe inspection and procedures for placing a scribe line on a probe were important prerequisites for accurate yaw angle measurements. Therefore, the methods include the following five general activities to be performed prior to calibrating a probe (1) Put a straight permanent line (scribe line) on the probe. This activity only needs to be performed once, not every time a probe is calibrated. The scribe line must meet certain straightness and width criteria so that a yaw angle measuring device can be accurately placed on the probe. (2) Check that the probe is not bent and does not have significant sag. (3) Pressure devices must be zeroed and calibrated. (4) The yaw angle measurement device must be calibrated and aligned relative to the reference scribe line. (5) The probe system must be leak checked.

(3) Perform Yaw Angle Calibration

Yaw angle errors were observed in the wind tunnel tests when the offset of the scribe line from the probe's zero yaw position was not accurately determined in the wind tunnel. The methods, therefore, include a yaw angle calibration procedure, which must be performed on the complete probe assembly in a wind tunnel to determine the ''reference scribe line rotational offset'' angle (R^{slo}). The R^{slo} indicates the rotational position of a probe's reference scribe line relative to the probe's yaw-null position and is used in determining the yaw angle of flow in a stack or duct.

(4) Perform Velocity and Pitch Calibrations

The field and wind tunnel tests showed that robust velocity and pitch calibration procedures were required if errors in velocity and volumetric flow determinations are to be avoided. For Method 2G, this consists of a wind tunnel procedure to determine a velocity calibration coefficient for the tested probe. This calibration coefficient is used to calculate stack gas velocity from pressure measurements taken in the field. The velocity calibration procedure involves taking three pairs of pressure measurements with the tested probe and a reference calibration pitot tube at two wind tunnel velocity settings. Calibration coefficients obtained at wind tunnel velocity settings of 60 and 90 feet per second (fps) are usable in all field applications where the velocities are 30 fps or greater. Calibration coefficients derived at other velocity settings are usable in

field applications where the measured velocity does not fall outside the limits defined by those velocity settings.

Method 2F includes wind tunnel procedures to determine both velocity and pitch angle calibration curves. These curves are used to determine both the pitch angle and velocity of flue gas flow when using a 3-dimensional probe. The pitch and velocity calibration procedure involves positioning the tested probe at a series of pitch angles settings relative to the flow in the wind tunnel and then taking pressure measurements with the tested probe and a reference probe. The measurements are repeated at two wind tunnel velocity settings. Calibration curves obtained at wind tunnel velocity settings of 60 and 90 fps are usable in all field applications over the entire velocity range allowed by the method. Calibration curves derived at other velocity settings are usable in all field applications allowed by the method as long as the measured velocity does not exceed both of the wind tunnel velocity settings used to derive the curves.

(5) Prepare for Field Test

The field tests showed that the inspection of probes and the set-up procedures described above under step 2 were not only a critical prerequisite for wind tunnel testing, but were equally important in field testing. For example, during one of the field tests, an inspection detected damage to the probe head which resulted in spurious readings from a probe. Thus, prior to beginning a field test, each method requires performance of all the checks described in item 2 (''Prepare to Calibrate Probe'') above, except for putting a scribe line on the probe. Additionally, the tester must inspect the probe for damage, mark traverse point distances on the probe, and determine a system response time.

(6) Perform Field Test

The field tests also showed that the quality of measurements was affected by procedures followed by testers when performing the field tests. For example, allowing sufficient response time and checking for probe plugging were shown to be important considerations during the field test. Thus, the methods give specific instructions on how to perform a field test. In particular, the methods instruct testers to perform the following steps. Insert the probe into a test port in the stack or duct, and move the probe to the first traverse point. After the system response time has elapsed, measure the yaw angle, impact pressure, and pitch angle pressure (Method 2F only). Take these measurements at each traverse point of the run. In addition, measure barometric pressure, flue gas molecular weight, moisture and static pressure. Check the probe periodically for plugging to prevent erratic results or sluggish responses.

(7) Perform Calculations

To account for pitch and yaw components of flow, the methods had to include new calculation procedures that were not needed in Method 2. These procedures were employed in the field tests and shown to be workable. They include calculating the pitch angle (Method 2F only) and impact velocity at each traverse point using the pressure measurements taken in the field and the calibration coefficient (Method 2G) or curves (Method 2F) derived in the wind tunnel. Using these values and the yaw angles measured in the field, the axial velocity (Method 2F) or yaw-adjusted velocity (Method 2G) is calculated at each traverse point. Stack or duct average velocity is then calculated by averaging over all the traverse point velocities. Checks are performed to see that the calibration coefficients or curves are appropriate for the velocity encountered in the field. Finally, the volumetric flow rate is derived by multiplying the stack or duct cross-sectional area and the average velocity.

B. Method 2H

Method 2H, ''Determination of Stack Gas Velocity Taking into Account Velocity Decay Near the Stack Wall'', can be used in conjunction with existing Method 2 or new Methods 2F or 2G to account for velocity drop-off near stack (or duct) walls in circular stacks (or ducts) no less than 3.3 feet in diameter. Method 2H is not suitable for use in rectangular stacks or ducts because the procedures in this method are not applicable to the complex and varying flow dynamics characteristic of such configurations.

There are two main approaches for determining wall effects adjusted velocity in Method 2H. Either a default wall effects adjustment factor (WAF) (i.e., 0.9900 (for brick and mortar stacks), or 0.9950 (for all other stacks or ducts)) may be used with Method 2, 2F, or 2G without taking any wall effects measurements or a WAF may be calculated from velocity measurements taken at 16 or more Method 1 traverse points and at 8 or more wall effects points. EPA's Method 1, ''Sample and Velocity Traverses for Stationary Sources'', is the test method for determining the number and location of traverse points in a stack or duct. Method 1 alone is generally not suitable for determining wall effects.

During the course of wall effects field testing, several potential problems were uncovered. Procedures were incorporated into Method 2H to prevent these problems. These are described below.

(1) Locate Traverse Points

The field test revealed that care needs to be exercised when locating wall effects traverse points; otherwise, the full wall effect may not be measured. Thus, Method 2H instructs testers to take measurements at 1-inch intervals starting at 1 inch from the wall or at the next closest 1-inch interval from the wall possible. Testers may perform either a partial or complete wall effects traverse. For a partial traverse, measurements are taken at two wall effects traverse points per test port, at a minimum. For a complete traverse, a series of 1-inch incremented measurements are taken beginning no further than 4 inches from the wall and extending in 1-inch intervals as far as 12 inches from the wall. The method presents procedures for determining the location of the wall effects points.

(2) Determine Sampling Order

Field tests also showed that an incorrect WAF may be calculated if the wall effects sampling is decoupled from the Method 1 sampling. Therefore, the method includes instructions on how sampling is to be performed. The sampling order may be from the wall to the center or from the center to the wall. Although the Method 1 and wall effects points need not be interspersed at each port, there should be no interruption between sampling at the wall effects and Method 1 points. The intent of this sampling sequence is to keep the Method 1 and the wall effects measurements as close together in time as possible to reduce the possibility of different velocity conditions occurring during the Method 1 and wall effects measurements.

(3) Take and Record Measurements

As in Methods 2F and 2G, field tests showed that the procedures followed by testers were critical to the quality of the measurements obtained. Wall effects testing not only required the procedures found in Method 2F and 2G, but also additional procedures for taking measurements close to a stack or duct wall. For example, the method had to include instructions for testing in situations where it may not be possible to obtain measurements within a certain proximity (e.g., 1 inch) of the stack or duct wall. Method 2H instructs testers to perform the following steps. After inserting the probe into the gas stream,

wait for the pressure and temperature readings to stabilize to stack or duct conditions before taking measurements at the first traverse point. (This time period is called the ''system response time'' and is defined in Methods 2F and 2G.) At all other traverse points, testers must allow enough time to obtain representative pressure measurements. If no velocity is detected at the wall effects point closest to the wall, move to the next 1-inch incremented wall effects point. Complete the integrated traverse as quickly as possible, consistent with adequate sampling time, so that the measurements are all taken under the same stack or duct conditions. In addition, take other measurements required by Method 2, 2F, or 2G (e.g., moisture, barometric pressure). Record all measurements.

(4) Perform Wall Effects Calculations

The field tests confirmed that a series of measurements near a stack wall could capture the impact of wall effects on flue gas flow in a stack or duct. To capture this effect, a new calculation procedure was developed which was tested in the field. This procedure was incorporated in Method 2H. It involves calculating the velocity at each wall effects traverse point and entering the resulting values in a table. The entered values are then used to find the wall effects-adjusted replacement velocities for the four Method 1 traverse points closest to the wall. These four values and the unadjusted velocity at the Method 1 traverse points are used to calculate a WAF. The WAF is a multiplier which can then be applied to the velocity derived using Methods 2, 2F, and 2G to account for velocity decay near the stack or duct wall. The WAF may be no less than 0.9800 for a partial traverse and no less than 0.9700 for a complete traverse. We derived these limits from analysis of wall effects tests performed on a variety of utility stacks (different stack lining material, velocities, and stack dimensions). If actual field testing indicates that the WAF for a particular stack or duct may be less than 0.970, the tester should increase the number of traverse points in the Method 1 traverse (e.g., to 20 or 24 points if a 16-point traverse was initially performed) and re-calculate the WAF to capture the full extent of the wall effect.

(5) Obtain Wall Effects Adjusted Velocity and Volumetric Flow Rate

While the field test showed the calculation procedures to be effective, the new test method also needed to clarify how WAFs were to be applied to calculate the wall effects adjusted volumetric flow rate for the stack or duct. Thus, the final steps in Method 2H include instructions on how to calculate the wall effects adjusted velocity for the stack or duct by multiplying the unadjusted velocity from Method 2, 2F, or 2G by the WAF (either calculated or default). The calculated WAF from one run may be applied to all runs of the same relative accuracy test audit (RATA). If calculated WAFs are obtained for several runs, the tester must average the WAFs and apply the resulting value to all runs of the same RATA. The stack or duct volumetric flow rate is then obtained by multiplying the wall effects adjusted velocity by the stack or duct cross-sectional area.

IV. Administrative Requirements

A. Executive Order 12866

Under Executive Order 12866 (58 FR 51735, October 4, 1993), the Administrator must determine whether the regulatory action is ''significant'' and therefore subject to Office of Management and Budget (OMB) review and the requirements of the Executive Order. The Order defines ''significant regulatory action'' as one that is likely to result in a rule that may:

(1) Have an annual effect on the economy of $100 million or more or adversely affect in a material way the economy, a sector of the economy, productivity, competition, jobs, the environment, public health or safety, or State, local or tribal governments or communities;

(2) Create a serious inconsistency or otherwise interfere with an action taken or planned by another agency;

(3) Materially alter the budgetary impact of entitlements, grants, user fees, or loan programs or the rights and obligations of recipients thereof; or

(4) Raise novel legal or policy issues arising out of legal mandates, the President's priorities, or the principles set forth in the Executive Order.

This action is not expected to have an annual effect on the economy of $100 million or more. Pursuant to the terms of Executive Order 12866, it has been determined that this direct final rule is not a significant action. As such, the direct final rule has not been submitted for OMB review.

Today's action provides options for applying scientific and analytical methods generally accepted by the scientific community. The options provided by this action are not precedential, but typical of the periodic improvements the Agency routinely makes to test methods based on advances in technology, science, and field experience. In keeping with past practice, we are retaining existing methods while offering new methods to provide the regulated community with additional choices and to lower the cost of compliance.

Since use of the new methods is voluntary, we anticipate that the new methods will be used only if they result in overall cost savings. While the cost of performing the new methods may be somewhat higher than the existing test method (due to higher probe calibration costs, increased stack testing time, and additional test equipment), these costs should be completely offset by compliance cost savings.

B. Executive Order 12875: Enhancing Intergovernmental Partnerships

Under Executive Order 12875, Enhancing Intergovernmental Partnerships, EPA may not issue a regulation that is not required by statute and that creates a mandate upon a State, local or tribal government, unless the Federal government provides the funds necessary to pay the direct compliance costs incurred by those governments, or EPA consults with those governments. If EPA complies by consulting, Executive Order 12875 requires EPA to provide to OMB a description of the extent of EPA's prior consultation with representatives of affected State, local and tribal governments, the nature of their concerns, copies of any written communications from the governments, and a statement supporting the need to issue the regulation. In addition, Executive Order 12875 requires EPA to develop an effective process permitting elected officials and other representatives of State, local and tribal governments ''to provide meaningful and timely input in the development of regulatory proposals containing significant unfunded mandates.''

As discussed above, today's direct final rule is voluntary and does not create a mandate on State, local or tribal governments. The rule does not impose any enforceable duties on these entities, unless they choose to use the new optional methods. Accordingly, the requirements of section 1(a) of Executive Order 12875 do not apply to this rule.

C. Executive Order 13084: Consultation and Coordination With Indian Tribal Governments

Under Executive Order 13084, Consultation and Coordination with Indian Tribal Governments, EPA may not issue a regulation that is not required by statute, that significantly or uniquely affects the communities of Indian tribal governments, and that

imposes substantial direct compliance costs on those communities, unless the Federal government provides the funds necessary to pay the direct compliance costs incurred by the tribal governments, or EPA consults with those governments. If EPA complies by consulting, Executive Order 13084 requires EPA to provide to OMB, in a separately identified section of the preamble to the rule, a description of the extent of EPA's prior consultation with representatives of affected tribal governments, a summary of the nature of their concerns, and a statement supporting the need to issue the regulation. In addition, Executive Order 13084 requires EPA to develop an effective process permitting elected officials and other representatives of Indian tribal governments ''to provide meaningful and timely input in the development of regulatory policies on matters that significantly or uniquely affect their communities.''

Today's direct final rule does not significantly or uniquely affect the communities of Indian tribal governments. Today's action finalizes test method procedures for determining volumetric flow rate in stacks or ducts. Since use of the new methods is voluntary, we anticipate that the new methods will be used only if they result in overall cost savings. While the cost of performing the new methods may be somewhat higher than the existing test method (due to higher probe calibration costs, increased stack testing time, and additional test equipment), these costs should be completely offset either by compliance cost savings or increased compliance certainty. Accordingly, the requirements of section 3(b) of Executive Order 13084 do not apply to this rule.

D. Unfunded Mandates Reform Act

Title II of the Unfunded Mandates Reform Act of 1995 (UMRA), P.L. 104–4, establishes requirements for Federal agencies to assess the effects of their regulatory actions on State, local, and tribal governments and the private sector. Under section 202 of the UMRA, EPA generally must prepare a written statement, including a cost-benefit analysis, for proposed and final rules with ''Federal mandates'' that may result in expenditures to State, local, and tribal governments, in the aggregate, or to the private sector, of $100 million or more in any one year. Before promulgating an EPA rule for which a written statement is needed, section 205 of the UMRA generally requires EPA to identify and consider a reasonable number of regulatory alternatives and adopt the least costly, most cost-effective, or least burdensome alternative that achieves the objectives of the rule. The provisions of section 205 do not apply when they are inconsistent with applicable law. Moreover, section 205 allows EPA to adopt an alternative other than the least costly, most cost-effective, or least burdensome alternative if the Administrator publishes with the final rule an explanation why that alternative was not adopted. Before EPA establishes any regulatory requirements that may significantly or uniquely affect small governments, including tribal governments, it must have developed under section 203 of the UMRA a small government agency plan. The plan must provide for notifying potentially affected small governments, enabling officials of affected small governments to have meaningful and timely input in the development of EPA regulatory proposals with significant Federal intergovernmental mandates, and informing, educating, and advising small governments on compliance with the regulatory requirements.

Today's direct final rule is not expected to result in expenditures of more than $100 million in any one year and, as such, is not subject to section 202 of the UMRA. The direct final rule is not expected to significantly or uniquely affect small governments.

E. Paperwork Reduction Act

Today's direct final rule will not add any additional information collection requirements to the current information collection requirements in the implementing regulations, e.g., part 75. Therefore an Information Collection Request was not prepared for the direct final rule.

An agency may not conduct or sponsor and a person is not required to respond to a collection of information, unless it displays a currently valid OMB control number. The OMB control numbers for EPA's regulations are listed in 40 CFR part 9 and 48 CFR chapter 15.

F. Regulatory Flexibility

The Regulatory Flexibility Act, 5 U.S.C. 601, *et seq.*, generally requires an agency to conduct a regulatory flexibility analysis of any rule subject to notice and comment rulemaking requirements unless the agency certifies that the rule will not have a significant economic impact on a substantial number of small entities. Small entities include small businesses, small not-for-profit enterprises, and governmental jurisdictions. EPA has determined that it is not necessary to prepare a regulatory flexibility analysis in connection with this direct final rule. EPA has also determined that this rule will not have a significant economic impact on a substantial number of small entities.

Since use of the new test methods is voluntary, we anticipate that the new options will be used only if they result in overall cost savings. While the cost of performing the new options may be somewhat higher than the existing test method (due to higher probe calibration costs, increased stack testing time, and additional test equipment), these costs should be completely offset by compliance cost savings.

G. Executive Order 13045

''Protection of Children From Environmental Health Risks and Safety Risks'' (62 FR 19885, April 23, 1997) applies to any rule that: (1) Was initiated after April 21, 1997, or for which a Notice of Proposed Rulemaking was published after April 21, 1998; (2) is determined to be ''economically significant'' as defined under E.O. 12866, and (3) concerns an environmental health or safety risk that EPA has reason to believe may have a disproportionate effect on children. If the regulatory action meets all three criteria, the Agency must evaluate the environmental health or safety effects of the planned rule on children and explain why the planned regulation is preferable to other potentially effective and reasonably feasible alternatives considered by the Agency.

EPA interprets Executive Order 13045 as applying only to those regulatory actions that are based on health or safety risks, such that the analysis required under section 5–501 of the Executive Order has the potential to influence the regulation. This direct final rule is not subject to the Executive Order because the rule does not establish an environmental standard intended to mitigate health or safety risks.

H. National Technology Transfer and Advancement Act

Section 12(d) of the National Technology Transfer and Advancement Act of 1995 (''NTTAA''), Pub L. 104–113 15 U.S.C. 272 note, directs EPA to use voluntary consensus standards in its regulatory activities unless to do so would be inconsistent with applicable law or otherwise impractical. Voluntary consensus standards are technical standards (e.g., materials specifications, test methods, sampling procedures, business practices) that are developed or adopted by voluntary consensus standards bodies. The NTTAA requires EPA to provide Congress, through OMB, explanations when the Agency decides

not to use available and applicable voluntary consensus standards.

EPA has not identified any voluntary consensus standards which might be applicable to this rulemaking.

I. Congressional Review Act

The Congressional Review Act, 5 U.S.C. 801 *et seq.*, as added by the Small Business Regulatory Enforcement Fairness Act of 1996, generally provides that before a rule may take effect, the agency promulgating the rule must submit a rule report, which includes a copy of the rule, to each House of the Congress and to the Comptroller General of the United States. EPA will submit a report containing this rule and other required information to the U.S. Senate, the U.S. House of Representatives, and the Comptroller General of the United States prior to publication of the rule in the **Federal Register**. A major rule cannot take effect until 60 days after it is published in the **Federal Register**. This action is not a ''major rule'' as defined by 5 U.S.C. § 804(2). This rule will be effective on July 13, 1999.

List of Subjects in 40 CFR Part 60

Air pollution control, Carbon dioxide, Continuous emission monitors, Electric power plants, Environmental protection, Nitrogen oxides, Particulate matter, Reporting and recordkeeping requirements, Sulfur dioxide.

Dated: May 5, 1999.

Carol M. Browner,

Administrator.

For the reasons set out in the preamble, title 40 chapter 1 of the Code of Federal Regulations is amended as follows:

PART 60—[AMENDED]

1. The authority citation for part 60 continues to read as follows:

Authority: 42 U.S.C. 7401, 7411, 7413, 7414, 7416, 7429, 7601 and 7602.

2. Appendix A is amended in the introductory table of contents by adding in alphanumeric order Methods 2F, 2G and 2H and by adding Methods 2F, 2G and 2H to Appendix A to read as follows:

Appendix A to Part 60—Test Methods

* * * * *

''Method 2F—Determination of Stack Gas Velocity and Volumetric Flow Rate With Three-Dimensional Probes''

''Method 2G—Determination of Stack Gas Velocity and Volumetric Flow Rate With Two-Dimensional Probes''

''Method 2H—Determination of Stack Gas Velocity Taking Into Account Velocity Decay Near the Stack Wall''

* * * * *

Method 2F—Determination of Stack Gas Velocity And Volumetric Flow Rate With Three-Dimensional Probes

Note: This method does not include all of the specifications (e.g., equipment and supplies) and procedures (e.g., sampling) essential to its performance. Some material has been incorporated from other methods in this part. Therefore, to obtain reliable results, those using this method should have a thorough knowledge of at least the following additional test methods: Methods 1, 2, 3 or 3A, and 4.

1.0 Scope and Application

1.1 This method is applicable for the determination of yaw angle, pitch angle, axial velocity and the volumetric flow rate of a gas stream in a stack or duct using a three-dimensional (3–D) probe. This method may be used only when the average stack or duct gas velocity is greater than or equal to 20 ft/sec. When the above condition cannot be met, alternative procedures, approved by the Administrator, U.S. Environmental Protection Agency, shall be used to make accurate flow rate determinations.

2.0 Summary of Method

2.1 A 3–D probe is used to determine the velocity pressure and the yaw and pitch angles of the flow velocity vector in a stack or duct. The method determines the yaw angle directly by rotating the probe to null the pressure across a pair of symmetrically placed ports on the probe head. The pitch angle is calculated using probe-specific calibration curves. From these values and a determination of the stack gas density, the average axial velocity of the stack gas is calculated. The average gas volumetric flow rate in the stack or duct is then determined from the average axial velocity.

3.0 Definitions

3.1. *Angle-measuring Device Rotational Offset (R_{ADO}).* The rotational position of an angle-measuring device relative to the reference scribe line, as determined during the pre-test rotational position check described in section 8.3.

3.2 *Axial Velocity.* The velocity vector parallel to the axis of the stack or duct that accounts for the yaw and pitch angle components of gas flow. The term ''axial'' is used herein to indicate that the velocity and volumetric flow rate results account for the measured yaw and pitch components of flow at each measurement point.

3.3 *Calibration Pitot Tube.* The standard (Prandtl type) pitot tube used as a reference when calibrating a 3–D probe under this method.

3.4 *Field Test.* A set of measurements conducted at a specific unit or exhaust stack/duct to satisfy the applicable regulation (e.g., a three-run boiler performance test, a single- or multiple-load nine-run relative accuracy test).

3.5 *Full Scale of Pressure-measuring Device.* Full scale refers to the upper limit of the measurement range displayed by the device. For bi-directional pressure gauges, full scale includes the entire pressure range from the lowest negative value to the highest positive value on the pressure scale.

3.6 *Main probe.* Refers to the probe head and that section of probe sheath directly attached to the probe head. The main probe sheath is distinguished from probe extensions, which are sections of sheath added onto the main probe to extend its reach.

3.7 *''May,'' ''Must,'' ''Shall,'' ''Should,''* and the imperative form of verbs.

3.7.1 *''May''* is used to indicate that a provision of this method is optional.

3.7.2 *''Must,'' ''Shall,''* and the imperative form of verbs (such as ''record'' or ''enter'') are used to indicate that a provision of this method is mandatory.

3.7.3 *''Should''* is used to indicate that a provision of this method is not mandatory, but is highly recommended as good practice.

3.8 *Method 1.* Refers to 40 CFR part 60, appendix A, ''Method 1—Sample and velocity traverses for stationary sources.''

3.9 *Method 2.* Refers to 40 CFR part 60, appendix A, ''Method 2—Determination of stack gas velocity and volumetric flow rate (Type S pitot tube).''

3.10 *Method 2G.* Refers to 40 CFR part 60, appendix A, ''Method 2G—Determination of stack gas velocity and volumetric flow rate with two-dimensional probes.''

3.11 *Nominal Velocity.* Refers to a wind tunnel velocity setting that approximates the actual wind tunnel velocity to within ±1.5 m/sec (±5 ft/sec).

3.12 *Pitch Angle.* The angle between the axis of the stack or duct and the pitch component of flow, i.e., the component of the total velocity vector in a plane defined by the traverse line and the axis of the stack or duct. (Figure 2F–1 illustrates the ''pitch plane.'') From the standpoint of a tester facing a test port in a vertical stack, the pitch component of flow is the vector of flow moving from the center of the stack toward or away from that test port. The pitch angle is the angle described by this pitch component of flow and the vertical axis of the stack.

3.13 *Readability.* For the purposes of this method, readability for an analog measurement device is one half of the smallest scale division. For a digital measurement device, it is the number of decimals displayed by the device.

3.14 *Reference Scribe Line.* A line permanently inscribed on the main probe sheath (in accordance with section 6.1.6.1) to serve as a reference mark for determining yaw angles.

3.15 *Reference Scribe Line Rotational Offset (R_{SLO}).* The rotational position of a probe's reference scribe line relative to the probe's yaw-null position, as determined during the yaw angle calibration described in section 10.5.

3.16 *Response Time.* The time required for the measurement system to fully respond to a change from zero differential pressure and ambient temperature to the stable stack or duct pressure and temperature readings at a traverse point.

3.17 *Tested Probe.* A 3–D probe that is being calibrated.

3.18 *Three-dimensional (3–D) Probe.* A directional probe used to determine the velocity pressure and yaw and pitch angles in a flowing gas stream.

3.19 *Traverse Line.* A diameter or axis extending across a stack or duct on which

measurements of differential pressure and flow angles are made.

3.20 *Wind Tunnel Calibration Location.* A point, line, area, or volume within the wind tunnel test section at, along, or within which probes are calibrated. At a particular wind tunnel velocity setting, the average velocity pressures at specified points at, along, or within the calibration location shall vary by no more than 2 percent or 0.3 mm H_2O (0.01 in. H_2O), whichever is less restrictive, from the average velocity pressure at the calibration pitot tube location. Air flow at this location shall be axial, i.e., yaw and pitch angles within ±° of 0°. Compliance with these flow criteria shall be demonstrated by performing the procedures prescribed in sections 10.1.1 and 10.1.2. For circular tunnels, no part of the calibration location may be closer to the tunnel wall than 10.2 cm (4 in.) or 25 percent of the tunnel diameter, whichever is farther from the wall. For elliptical or rectangular tunnels, no part of the calibration location may be closer to the tunnel wall than 10.2 cm (4 in.) or 25 percent of the applicable cross-sectional axis, whichever is farther from the wall.

3.21 *Wind Tunnel with Documented Axial Flow.* A wind tunnel facility documented as meeting the provisions of sections 10.1.1 (velocity pressure cross-check) and 10.1.2 (axial flow verification) using the procedures described in these sections or alternative procedures determined to be technically equivalent.

3.22 *Yaw Angle.* The angle between the axis of the stack or duct and the yaw component of flow, i.e., the component of the total velocity vector in a plane perpendicular to the traverse line at a particular traverse point. (Figure 2F–1 illustrates the ''yaw plane.'') From the standpoint of a tester facing a test port in a vertical stack, the yaw component of flow is the vector of flow moving to the left or right from the center of the stack as viewed by the tester. (This is sometimes referred to as ''vortex flow,'' i.e., flow around the centerline of a stack or duct.) The yaw angle is the angle described by this yaw component of flow and the vertical axis of the stack. The algebraic sign convention is illustrated in Figure 2F–2.

3.23 *Yaw Nulling.* A procedure in which a probe is rotated about its axis in a stack or duct until a zero differential pressure reading (''yaw null'') is obtained. When a 3–D probe is yaw-nulled, its impact pressure port (P_1) faces directly into the direction of flow in the stack or duct and the differential pressure between pressure ports P_2 and P_3 is zero.

4.0 *Interferences.* [Reserved]

5.0 *Safety.*

5.1 This test method may involve hazardous operations and the use of hazardous materials or equipment. This method does not purport to address all of the safety problems associated with its use. It is the responsibility of the user to establish and implement appropriate safety and health practices and to determine the applicability of regulatory limitations before using this test method.

6.0 Equipment and Supplies

6.1 Three-dimensional Probes. The 3–D probes as specified in subsections 6.1.1 through 6.1.3 below qualify for use based on comprehensive wind tunnel and field studies involving both inter-and intra-probe comparisons by multiple test teams. Other types of probes shall not be used unless approved by the Administrator. Each 3–D probe shall have a unique identification number or code permanently marked on the main probe sheath. The minimum recommended diameter of the sensing head of any probe used under this method is 2.5 cm (1 in.). Each probe shall be calibrated prior to use according to the procedures in section 10. Manufacturer-supplied calibration data shall be used as example information only, except when the manufacturer calibrates the 3–D probe as specified in section 10 and provides complete documentation.

6.1.1 Five-hole prism-shaped probe. This type of probe consists of five pressure taps in the flat facets of a prism-shaped sensing head. The pressure taps are numbered 1 through 5, with the pressures measured at each hole referred to as P_1, P_2, P_3, P_4, and P_5, respectively. Figure 2F–3 is an illustration of the placement of pressure taps on a commonly available five-hole prism-shaped probe, the 2.5-cm (1-in.) DAT probe. (Note: Mention of trade names or specific products does not constitute endorsement by the U.S. Environmental Protection Agency.) The numbering arrangement for the prism-shaped sensing head presented in Figure 2F–3 shall be followed for correct operation of the probe. A brief description of the probe measurements involved is as follows: the differential pressure P_2–P_3 is used to yaw null the probe and determine the yaw angle; the differential pressure P_4–P_5 is a function of pitch angle; and the differential pressure P_1–P_2 is a function of total velocity.

6.1.2 Five-hole spherical probe. This type of probe consists of five pressure taps in a spherical sensing head. As with the prism-shaped probe, the pressure taps are numbered 1 through 5, with the pressures measured at each hole referred to as P_1, P_2, P_3, P_4, and P_5, respectively. However, the P_4 and P_5 pressure taps are in the reverse location from their respective positions on the prism-shaped probe head. The differential pressure P_2–P_3 is used to yaw null the probe and determine the yaw angle; the differential pressure P_4–P_5 is a function of pitch angle; and the differential pressure P_1–P_2 is a function of total velocity. A diagram of a typical spherical probe sensing head is presented in Figure 2F–4. Typical probe dimensions are indicated in the illustration.

6.1.3 A manual 3–D probe refers to a five-hole prism-shaped or spherical probe that is positioned at individual traverse points and yaw nulled manually by an operator. An automated 3–D probe refers to a system that uses a computer-controlled motorized mechanism to position the five-hole prism-shaped or spherical head at individual traverse points and perform yaw angle determinations.

6.1.4 Other three-dimensional probes. [Reserved]

6.1.5 Probe sheath. The probe shaft shall include an outer sheath to: (1) provide a surface for inscribing a permanent reference scribe line, (2) accommodate attachment of an angle-measuring device to the probe shaft, and (3) facilitate precise rotational movement of the probe for determining yaw angles. The sheath shall be rigidly attached to the probe assembly and shall enclose all pressure lines from the probe head to the farthest position away from the probe head where an angle-measuring device may be attached during use in the field. The sheath of the fully assembled probe shall be sufficiently rigid and straight at all rotational positions such that, when one end of the probe shaft is held in a horizontal position, the fully extended probe meets the horizontal straightness specifications indicated in section 8.2 below.

6.1.6 Scribe lines.

6.1.6.1 Reference scribe line. A permanent line, no greater than 1.6 mm (1/16 in.) in width, shall be inscribed on each manual probe that will be used to determine yaw angles of flow. This line shall be placed on the main probe sheath in accordance with the procedures described in section 10.4 and is used as a reference position for installation of the yaw angle-measuring device on the probe. At the discretion of the tester, the scribe line may be a single line segment placed at a particular position on the probe sheath (e.g., near the probe head), multiple line segments placed at various locations along the length of the probe sheath (e.g., at every position where a yaw angle-measuring device may be mounted), or a single continuous line extending along the full length of the probe sheath.

6.1.6.2 Scribe line on probe extensions. A permanent line may also be inscribed on any probe extension that will be attached to the main probe in performing field testing. This allows a yaw angle-measuring device mounted on the extension to be readily aligned with the reference scribe line on the main probe sheath.

6.1.6.3 Alignment specifications. This specification shall be met separately, using the procedures in section 10.4.1, on the main probe and on each probe extension. The rotational position of the scribe line or scribe line segments on the main probe or any probe extension must not vary by more than 2°. That is, the difference between the minimum and maximum of all of the rotational angles that are measured along the full length of the main probe or the probe extension must not exceed 2°.

6.1.7 Probe and system characteristics to ensure horizontal stability.

6.1.7.1 For manual probes, it is recommended that the effective length of the probe (coupled with a probe extension, if necessary) be at least 0.9 m (3 ft.) longer than the farthest traverse point mark on the probe shaft away from the probe head. The operator should maintain the probe's horizontal stability when it is fully inserted into the stack or duct. If a shorter probe is used, the probe should be inserted through a bushing sleeve, similar to the one shown in Figure 2F–5, that is installed on the test port; such a bushing shall fit snugly around the probe and be secured to the stack or duct entry port in such a manner as to maintain the probe's horizontal stability when fully inserted into the stack or duct.

6.1.7.2 An automated system that includes an external probe casing with a

transport system shall have a mechanism for maintaining horizontal stability comparable to that obtained by manual probes following the provisions of this method. The automated probe assembly shall also be constructed to maintain the alignment and position of the pressure ports during sampling at each traverse point. The design of the probe casing and transport system shall allow the probe to be removed from the stack or duct and checked through direct physical measurement for angular position and insertion depth.

6.1.8 The tubing that is used to connect the probe and the pressure-measuring device should have an inside diameter of at least 3.2 mm (1/8 in.), to reduce the time required for pressure equilibration, and should be as short as practicable.

6.2 Yaw Angle-measuring Device. One of the following devices shall be used for measurement of the yaw angle of flow.

6.2.1 Digital inclinometer. This refers to a digital device capable of measuring and displaying the rotational position of the probe to within ±1°. The device shall be able to be locked into position on the probe sheath or probe extension, so that it indicates the probe's rotational position throughout the test. A rotational position collar block that can be attached to the probe sheath (similar to the collar shown in Figure 2F–6) may be required to lock the digital inclinometer into position on the probe sheath.

6.2.2 Protractor wheel and pointer assembly. This apparatus, similar to that shown in Figure 2F–7, consists of the following components.

6.2.2.1 A protractor wheel that can be attached to a port opening and set in a fixed rotational position to indicate the yaw angle position of the probe's scribe line relative to the longitudinal axis of the stack or duct. The protractor wheel must have a measurement ring on its face that is no less than 17.8 cm (7 in.) in diameter, shall be able to be rotated to any angle and then locked into position on the stack or duct port, and shall indicate angles to a resolution of 1°.

6.2.2.2 A pointer assembly that includes an indicator needle mounted on a collar that can slide over the probe sheath and be locked into a fixed rotational position on the probe sheath. The pointer needle shall be of sufficient length, rigidity, and sharpness to allow the tester to determine the probe's angular position to within 1° from the markings on the protractor wheel. Corresponding to the position of the pointer, the collar must have a scribe line to be used in aligning the pointer with the scribe line on the probe sheath.

6.2.3 Other yaw angle-measuring devices. Other angle-measuring devices with a manufacturer's specified precision of 1° or better may be used, if approved by the Administrator.

6.3 Probe Supports and Stabilization Devices. When probes are used for determining flow angles, the probe head should be kept in a stable horizontal position. For probes longer than 3.0 m (10 ft.), the section of the probe that extends outside the test port shall be secured. Three alternative devices are suggested for maintaining the horizontal position and stability of the probe shaft during flow angle determinations and velocity pressure measurements: (1) Monorails installed above each port, (2) probe stands on which the probe shaft may be rested, or (3) bushing sleeves of sufficient length secured to the test ports to maintain probes in a horizontal position. Comparable provisions shall be made to ensure that automated systems maintain the horizontal position of the probe in the stack or duct. The physical characteristics of each test platform may dictate the most suitable type of stabilization device. Thus, the choice of a specific stabilization device is left to the judgment of the testers.

6.4 Differential Pressure Gauges. The pressure (ΔP) measuring devices used during wind tunnel calibrations and field testing shall be either electronic manometers (e.g., pressure transducers), fluid manometers, or mechanical pressure gauges (e.g., Magnehelic® gauges). Use of electronic manometers is recommended. Under low velocity conditions, use of electronic manometers may be necessary to obtain acceptable measurements.

6.4.1 Differential pressure-measuring device. This refers to a device capable of measuring pressure differentials and having a readability of ±1 percent of full scale. The device shall be capable of accurately measuring the maximum expected pressure differential. Such devices are used to determine the following pressure measurements: velocity pressure, static pressure, yaw-null pressure, and pitch-angle pressure. For an inclined-vertical manometer, the readability specification of ±1 percent shall be met separately using the respective full-scale upper limits of the inclined and vertical portions of the scales. To the extent practicable, the device shall be selected such that most of the pressure readings are between 10 and 90 percent of the device's full-scale measurement range (as defined in section 3.5). Typical velocity pressure (P_1–P_2 ranges for both the prism-shaped probe and the spherical probe are 0 to 1.3 cm H_2O (0 to 0.5 in. H_2O), 0 to 5.1 cm H_2O (0 to 2 in. H_2O), and 0 to 12.7 cm H_2O (0 to 5 in. H_2O). The pitch angle (P_4–P_5) pressure range is typically −6.4 to +6.4 mm H_2O (−0.25 to +0.25 in. H_2O) or −12.7 to +12.7 mm H_2O (−0.5 to +0.5 in. H_2O) for the prism-shaped probe, and −12.7 to +12.7 mm H_2O (−0.5 to +0.5 in. H_2O) or −5.1 to +5.1 cm H_2O (−2 to +2 in. H_2O) for the spherical probe. The pressure range for the yaw null (P_2–P_3) readings is typically −12.7 to +12.7 mm H_2O (−0.5 to +0.5 in. H_2O) for both probe types. In addition, pressure-measuring devices should be selected such that the zero does not drift by more than 5 percent of the average expected pressure readings to be encountered during the field test. This is particularly important under low pressure conditions.

6.4.2 Gauge used for yaw nulling. The differential pressure-measuring device chosen for yaw nulling the probe during the wind tunnel calibrations and field testing shall be bi-directional, i.e., capable of reading both positive and negative differential pressures. If a mechanical, bi-directional pressure gauge is chosen, it shall have a full-scale range no greater than 2.6 cm H_2O (1 in. H_2O) [i.e., −1.3 to +1.3 cm H_2O (−0.5 in. to +0.5 in.)].

6.4.3 Devices for calibrating differential pressure-measuring devices. A precision manometer (e.g., a U-tube, inclined, or inclined-vertical manometer, or micromanometer) or NIST (National Institute of Standards and Technology) traceable pressure source shall be used for calibrating differential pressure-measuring devices. The device shall be maintained under laboratory conditions or in a similar protected environment (e.g., a climate-controlled trailer). It shall not be used in field tests. The precision manometer shall have a scale gradation of 0.3 mm H_2O (0.01 in. H_2O), or less, in the range of 0 to 5.1 cm H_2O (0 to 2 in. H_2O) and 2.5 mm H_2O (0.1 in. H_2O), or less, in the range of 5.1 to 25.4 cm H_2O (2 to 10 in. H_2O). The manometer shall have manufacturer's documentation that it meets an accuracy specification of at least 0.5 percent of full scale. The NIST-traceable pressure source shall be recertified annually.

6.4.4 Devices used for post-test calibration check. A precision manometer meeting the specifications in section 6.4.3, a pressure-measuring device or pressure source with a documented calibration traceable to NIST, or an equivalent device approved by the Administrator shall be used for the post-test calibration check. The pressure-measuring device shall have a readability equivalent to or greater than the tested device. The pressure source shall be capable of generating pressures between 50 and 90 percent of the range of the tested device and known to within ±1 percent of the full scale of the tested device. The pressure source shall be recertified annually.

6.5 Data Display and Capture Devices. Electronic manometers (if used) shall be coupled with a data display device (such as a digital panel meter, personal computer display, or strip chart) that allows the tester to observe and validate the pressure measurements taken during testing. They shall also be connected to a data recorder (such as a data logger or a personal computer with data capture software) that has the ability to compute and retain the appropriate average value at each traverse point, identified by collection time and traverse point.

6.6 Temperature Gauges. For field tests, a thermocouple or resistance temperature detector (RTD) capable of measuring temperature to within ±3°C (±5°F) of the stack or duct temperature shall be used. The thermocouple shall be attached to the probe such that the sensor tip does not touch any metal and is located on the opposite side of the probe head from the pressure ports so as not to interfere with the gas flow around the probe head. The position of the thermocouple relative to the pressure port face openings shall be in the same configuration as used for the probe calibrations in the wind tunnel. Temperature gauges used for wind tunnel calibrations shall be capable of measuring temperature to within ±0.6°C (±1°F) of the temperature of the flowing gas stream in the wind tunnel.

6.7 Stack or Duct Static Pressure Measurement. The pressure-measuring

device used with the probe shall be as specified in section 6.4 of this method. The static tap of a standard (Prandtl type) pitot tube or one leg of a Type S pitot tube with the face opening planes positioned parallel to the gas flow may be used for this measurement. Also acceptable is the pressure differential reading of P_1–P_{bar} from a five-hole prism-shaped probe (e.g., Type DA or DAT probe) with the P_1 pressure port face opening positioned parallel to the gas flow in the same manner as the Type S probe. However, the spherical probe, as specified in section 6.1.2, is unable to provide this measurement and shall not be used to take static pressure measurements. Static pressure measurement is further described in section 8.11.

6.8 Barometer. Same as Method 2, section 2.5.

6.9 Gas Density Determination Equipment. Method 3 or 3A shall be used to determine the dry molecular weight of the stack gas. Method 4 shall be used for moisture content determination and computation of stack gas wet molecular weight. Other methods may be used, if approved by the Administrator.

6.10 Calibration Pitot Tube. Same as Method 2, section 2.7.

6.11 Wind Tunnel for Probe Calibration. Wind tunnels used to calibrate velocity probes must meet the following design specifications.

6.11.1 Test section cross-sectional area. The flowing gas stream shall be confined within a circular, rectangular, or elliptical duct. The cross-sectional area of the tunnel must be large enough to ensure fully developed flow in the presence of both the calibration pitot tube and the tested probe. The calibration site, or ''test section,'' of the wind tunnel shall have a minimum diameter of 30.5 cm (12 in.) for circular or elliptical duct cross-sections or a minimum width of 30.5 cm (12 in.) on the shorter side for rectangular cross-sections. Wind tunnels shall meet the probe blockage provisions of this section and the qualification requirements prescribed in section 10.1. The projected area of the portion of the probe head, shaft, and attached devices inside the wind tunnel during calibration shall represent no more than 4 percent of the cross-sectional area of the tunnel. The projected area shall include the combined area of the calibration pitot tube and the tested probe if both probes are placed simultaneously in the same cross-sectional plane in the wind tunnel, or the larger projected area of the two probes if they are placed alternately in the wind tunnel.

6.11.2 Velocity range and stability. The wind tunnel should be capable of maintaining velocities between 6.1 m/sec and 30.5 m/sec (20 ft/sec and 100 ft/sec). The wind tunnel shall produce fully developed flow patterns that are stable and parallel to the axis of the duct in the test section.

6.11.3 Flow profile at the calibration location. The wind tunnel shall provide axial flow within the test section calibration location (as defined in section 3.20). Yaw and pitch angles in the calibration location shall be within ±3° of 0°. The procedure for determining that this requirement has been met is described in section 10.1.2.

6.11.4 Entry ports in the wind tunnel test section.

6.11.4.1 Port for tested probe. A port shall be constructed for the tested probe. The port should have an elongated slot parallel to the axis of the duct at the test section. The elongated slot should be of sufficient length to allow attaining all the pitch angles at which the probe will be calibrated for use in the field. To facilitate alignment of the probe during calibration, the test section should include a window constructed of a transparent material to allow the tested probe to be viewed. This port shall be located to allow the head of the tested probe to be positioned within the calibration location (as defined in section 3.20) at all pitch angle settings.

6.11.4.2 Port for verification of axial flow. Depending on the equipment selected to conduct the axial flow verification prescribed in section 10.1.2, a second port, located 90° from the entry port for the tested probe, may be needed to allow verification that the gas flow is parallel to the central axis of the test section. This port should be located and constructed so as to allow one of the probes described in section 10.1.2.2 to access the same test point(s) that are accessible from the port described in section 6.11.4.1.

6.11.4.3 Port for calibration pitot tube. The calibration pitot tube shall be used in the port for the tested probe or a separate entry port. In either case, all measurements with the calibration pitot tube shall be made at the same point within the wind tunnel over the course of a probe calibration. The measurement point for the calibration pitot tube shall meet the same specifications for distance from the wall and for axial flow as described in section 3.20 for the wind tunnel calibration location.

6.11.5 Pitch angle protractor plate. A protractor plate shall be attached directly under the port used with the tested probe and set in a fixed position to indicate the pitch angle position of the probe relative to the longitudinal axis of the wind tunnel duct (similar to Figure 2F–8). The protractor plate shall indicate angles in 5° increments with a minimum resolution of ±2°. The tested probe shall be able to be locked into position at the desired pitch angle delineated on the protractor. The probe head position shall be maintained within the calibration location (as defined in section 3.20) in the test section of the wind tunnel during all tests across the range of pitch angles.

7.0 Reagents and Standards. [Reserved]

8.0 Sample Collection and Analysis

8.1 Equipment Inspection and Set-Up

8.1.1 All probes, differential pressure-measuring devices, yaw angle-measuring devices, thermocouples, and barometers shall have a current, valid calibration before being used in a field test. (See sections 10.3.3, 10.3.4, and 10.5 through10.10 for the applicable calibration requirements.)

8.1.2 Before each field use of a 3-D probe, perform a visual inspection to verify the physical condition of the probe head according to the procedures in section 10.2. Record the inspection results on a form similar to Table 2F–1. If there is visible damage to the 3-D probe, the probe shall not be used until it is recalibrated.

8.1.3 After verifying that the physical condition of the probe head is acceptable, set up the apparatus using lengths of flexible tubing that are as short as practicable. Surge tanks installed between the probe and pressure-measuring device may be used to dampen pressure fluctuations provided that an adequate measurement response time (see section 8.8) is maintained.

8.2 Horizontal Straightness Check. A horizontal straightness check shall be performed before the start of each field test, except as otherwise specified in this section. Secure the fully assembled probe (including the probe head and all probe shaft extensions) in a horizontal position using a stationary support at a point along the probe shaft approximating the location of the stack or duct entry port when the probe is sampling at the farthest traverse point from the stack or duct wall. The probe shall be rotated to detect bends. Use an angle-measuring device or trigonometry to determine the bend or sag between the probe head and the secured end. (See Figure 2F–9.) Probes that are bent or sag by more than 5° shall not be used. Although this check does not apply when the probe is used for a vertical traverse, care should be taken to avoid the use of bent probes when conducting vertical traverses. If the probe is constructed of a rigid steel material and consists of a main probe without probe extensions, this check need only be performed before the initial field use of the probe, when the probe is recalibrated, when a change is made to the the design or material of the probe assembly, and when the probe becomes bent. With such probes, a visual inspection shall be made of the fully assembled probe before each field test to determine if a bend is visible. The probe shall be rotated to detect bends. The inspection results shall be documented in the field test report. If a bend in the probe is visible, the horizontal straightness check shall be performed before the probe is used.

8.3 Rotational Position Check. Before each field test, and each time an extension is added to the probe during a field test, a rotational position check shall be performed on all manually operated probes (except as noted in section 8.3.5, below) to ensure that, throughout testing, the angle-measuring device is either: aligned to within ±1° of the rotational position of the reference scribe line; or is affixed to the probe such that the rotational offset of the device from the reference scribe line is known to within ±1°. This check shall consist of direct measurements of the rotational positions of the reference scribe line and angle-measuring device sufficient to verify that these specifications are met. Annex A in section 18 of this method gives recommended procedures for performing the rotational position check, and Table 2F–2 gives an example data form. Procedures other than those recommended in Annex A in section 18 may be used, provided they demonstrate whether the alignment specification is met and are explained in detail in the field test report.

8.3.1 Angle-measuring device rotational offset. The tester shall maintain a record of

the angle-measuring device rotational offset, R_{ADO}, as defined in section 3.1. Note that R_{ADO} is assigned a value of 0° when the angle-measuring device is aligned to within ±1° of the rotational position of the reference scribe line. The R_{ADO} shall be used to determine the yaw angle of flow in accordance with section 8.9.4.

8.3.2 Sign of angle-measuring device rotational offset. The sign of R_{ADO} is positive when the angle-measuring device (as viewed from the ''tail'' end of the probe) is positioned in a clockwise direction from the reference scribe line and negative when the device is positioned in a counterclockwise direction from the reference scribe line.

8.3.3 Angle-measuring devices that can be independently adjusted (e.g., by means of a set screw), after being locked into position on the probe sheath, may be used. However, the R_{ADO} must also take into account this adjustment.

8.3.4 Post-test check. If probe extensions remain attached to the main probe throughout the field test, the rotational position check shall be repeated, at a minimum, at the completion of the field test to ensure that the angle-measuring device has remained within ±2° of its rotational position established prior to testing. At the discretion of the tester, additional checks may be conducted after completion of testing at any sample port or after any test run. If the ±2° specification is not met, all measurements made since the last successful rotational position check must be repeated. Section 18.1.1.3 of Annex A provides an example procedure for performing the post-test check.

8.3.5 Exceptions.

8.3.5.1 A rotational position check need not be performed if, for measurements taken at all velocity traverse points, the yaw angle-measuring device is mounted and aligned directly on the reference scribe line specified in sections 6.1.6.1 and 6.1.6.3 and no independent adjustments, as described in section 8.3.3, are made to the device's rotational position.

8.3.5.2 If extensions are detached and re-attached to the probe during a field test, a rotational position check need only be performed the first time an extension is added to the probe, rather than each time the extension is re-attached, if the probe extension is designed to be locked into a mechanically fixed rotational position (e.g., through use of interlocking grooves) that can re-establish the initial rotational position to within ±1°.

8.4 Leak Checks. A pre-test leak check shall be conducted before each field test. A post-test check shall be performed at the end of the field test, but additional leak checks may be conducted after any test run or group of test runs. The post-test check may also serve as the pre-test check for the next group of test runs. If any leak check is failed, all runs since the last passed leak check are invalid. While performing the leak check procedures, also check each pressure device's responsiveness to the changes in pressure.

8.4.1 To perform the leak check, pressurize the probe's P_1 pressure port until at least 7.6 cm H_2O (3 in. H_2O) pressure, or a pressure corresponding to approximately 75 percent of the pressure-measuring device's measurement scale, whichever is less, registers on the device; then, close off the pressure port. The pressure shall remain stable [±2.5 mm H_2O (±0.10 in. H_2O)] for at least 15 seconds. Check the P_2, P_3, P_4, and P_5 pressure ports in the same fashion. Other leak-check procedures may be used, if approved by the Administrator.

8.5 Zeroing the Differential Pressure-measuring Device. Zero each differential pressure-measuring device, including the device used for yaw nulling, before each field test. At a minimum, check the zero after each field test. A zero check may also be performed after any test run or group of test runs. For fluid manometers and mechanical pressure gauges (e.g., Magnehelic® gauges), the zero reading shall not deviate from zero by more than ±0.8 mm H_2O (±0.03 in. H_2O) or one minor scale division, whichever is greater, between checks. For electronic manometers, the zero reading shall not deviate from zero between checks by more than: ±0.3 mm H_2O (±0.01 in. H_2O), for full scales less than or equal to 5.1 cm H_2O (2.0 in. H_2O); or ±0.8 mm H_2O (±0.03 in. H_2O), for full scales greater than 5.1 cm H_2O (2.0 in. H_2O). (Note: If negative zero drift is not directly readable, estimate the reading based on the position of the gauge oil in the manometer or of the needle on the pressure gauge.) In addition, for all pressure-measuring devices except those used exclusively for yaw nulling, the zero reading shall not deviate from zero by more than 5 percent of the average measured differential pressure at any distinct process condition or load level. If any zero check is failed at a specific process condition or load level, all runs conducted at that process condition or load level since the last passed zero check are invalid.

8.6 Traverse Point Verification. The number and location of the traverse points shall be selected based on Method 1 guidelines. The stack or duct diameter and port nipple lengths, including any extension of the port nipples into stack or duct, shall be verified the first time the test is performed; retain and use this information for subsequent field tests, updating it as required. Physically measure the stack or duct dimensions or use a calibrated laser device; do not use engineering drawings of the stack or duct. The probe length necessary to reach each traverse point shall be recorded to within ±6.4 mm (±1/4 in.) and, for manual probes, marked on the probe sheath. In determining these lengths, the tester shall take into account both the distance that the port flange projects outside of the stack and the depth that any port nipple extends into the gas stream. The resulting point positions shall reflect the true distances from the inside wall of the stack or duct, so that when the tester aligns any of the markings with the outside face of the stack port, the probe's impact port shall be located at the appropriate distance from the inside wall for the respective Method 1 traverse point. Before beginning testing at a particular location, an out-of-stack or duct verification shall be performed on each probe that will be used to ensure that these position markings are correct. The distances measured during the verification must agree with the previously calculated distances to within ±1/4 in. For manual probes, the traverse point positions shall be verified by measuring the distance of each mark from the probe's P_1 pressure port. A comparable out-of-stack test shall be performed on automated probe systems. The probe shall be extended to each of the prescribed traverse point positions. Then, the accuracy of the positioning for each traverse point shall be verified by measuring the distance between the port flange and the probe's P_1 pressure port.

8.7 Probe Installation. Insert the probe into the test port. A solid material shall be used to seal the port.

8.8 System Response Time. Determine the response time of the probe measurement system. Insert and position the ''cold'' probe (at ambient temperature and pressure) at any Method 1 traverse point. Read and record the probe's P_1–P_2 differential pressure, temperature, and elapsed time at 15-second intervals until stable readings for both pressure and temperature are achieved. The response time is the longer of these two elapsed times. Record the response time.

8.9 Sampling.

8.9.1 Yaw angle measurement protocol. With manual probes, yaw angle measurements may be obtained in two alternative ways during the field test, either by using a yaw angle-measuring device (e.g., digital inclinometer) affixed to the probe, or using a protractor wheel and pointer assembly. For horizontal traversing, either approach may be used. For vertical traversing, i.e., when measuring from on top or into the bottom of a horizontal duct, only the protractor wheel and pointer assembly may be used. With automated probes, curve-fitting protocols may be used to obtain yaw-angle measurements.

8.9.1.1 If a yaw angle-measuring device affixed to the probe is to be used, lock the device on the probe sheath, aligning it either on the reference scribe line or in the rotational offset position established under section 8.3.1.

8.9.1.2 If a protractor wheel and pointer assembly is to be used, follow the procedures in Annex B of this method.

8.9.1.3 Other yaw angle-determination procedures. If approved by the Administrator, other procedures for determining yaw angle may be used, provided that they are verified in a wind tunnel to be able to perform the yaw angle calibration procedure as described in section 10.5.

8.9.2 Sampling strategy. At each traverse point, first yaw-null the probe, as described in section 8.9.3, below. Then, with the probe oriented into the direction of flow, measure and record the yaw angle, the differential pressures and the temperature at the traverse point, after stable readings are achieved, in accordance with sections 8.9.4 and 8.9.5. At the start of testing in each port (i.e., after a probe has been inserted into the flue gas stream), allow at least the response time to elapse before beginning to take measurements at the first traverse point accessed from that port. Provided that the probe is not removed from the flue gas stream, measurements may be taken at subsequent traverse points accessed from the

same test port without waiting again for the response time to elapse.

8.9.3 Yaw-nulling procedure. In preparation for yaw angle determination, the probe must first be yaw nulled. After positioning the probe at the appropriate traverse point, perform the following procedures.

8.9.3.1 Rotate the probe until a null differential pressure reading (the difference in pressures across the P_2 and P_3 pressure ports is zero, i.e., $P_2 = P_3$) is indicated by the yaw angle pressure gauge. Read and record the angle displayed by the angle-measuring device.

8.9.3.2 Sign of the measured angle. The angle displayed on the angle-measuring device is considered positive when the probe's impact pressure port (as viewed from the ''tail'' end of the probe) is oriented in a clockwise rotational position relative to the stack or duct axis and is considered negative when the probe's impact pressure port is oriented in a counterclockwise rotational position (see Figure 2F–10).

8.9.4 Yaw angle determination. After performing the yaw-nulling procedure in section 8.9.3, determine the yaw angle of flow according to one of the following procedures. Special care must be observed to take into account the signs of the recorded angle and all offsets.

8.9.4.1 Direct-reading. If all rotational offsets are zero or if the angle-measuring device rotational offset (R_{ADO}) determined in section 8.3 exactly compensates for the scribe line rotational offset (R_{SLO}) determined in section 10.5, then the magnitude of the yaw angle is equal to the displayed angle-measuring device reading from section 8.9.3.1. The algebraic sign of the yaw angle is determined in accordance with section 8.9.3.2.

Note: Under certain circumstances (e.g., testing of horizontal ducts), a 90° adjustment to the angle-measuring device readings may be necessary to obtain the correct yaw angles.

8.9.4.2 Compensation for rotational offsets during data reduction. When the angle-measuring device rotational offset does not compensate for reference scribe line rotational offset, the following procedure shall be used to determine the yaw angle:

(a) Enter the reading indicated by the angle-measuring device from section 8.9.3.1.

(b) Associate the proper algebraic sign from section 8.9.3.2 with the reading in step (a).

(c) Subtract the reference scribe line rotational offset, R_{SLO}, from the reading in step (b).

(d) Subtract the angle-measuring device rotational offset, R_{ADO}, if any, from the result obtained in step (c).

(e) The final result obtained in step (d) is the yaw angle of flow.

Note: It may be necessary to first apply a 90° adjustment to the reading in step (a), in order to obtain the correct yaw angle.

8.9.4.3 Record the yaw angle measurements on a form similar to Table 2F–3.

8.9.5 Velocity determination. Maintain the probe rotational position established during the yaw angle determination. Then, begin recording the pressure-measuring device readings for the impact pressure (P_1–P_2) and pitch angle pressure (P_4–P_5). These pressure measurements shall be taken over a sampling period of sufficiently long duration to ensure representative readings at each traverse point. If the pressure measurements are determined from visual readings of the pressure device or display, allow sufficient time to observe the pulsation in the readings to obtain a sight-weighted average, which is then recorded manually. If an automated data acquisition system (e.g., data logger, computer-based data recorder, strip chart recorder) is used to record the pressure measurements, obtain an integrated average of all pressure readings at the traverse point. Stack or duct gas temperature measurements shall be recorded, at a minimum, once at each traverse point. Record all necessary data as shown in the example field data form (Table 2F–3).

8.9.6 Alignment check. For manually operated probes, after the required yaw angle and differential pressure and temperature measurements have been made at each traverse point, verify (e.g., by visual inspection) that the yaw angle-measuring device has remained in proper alignment with the reference scribe line or with the rotational offset position established in section 8.3. If, for a particular traverse point, the angle-measuring device is found to be in proper alignment, proceed to the next traverse point; otherwise, re-align the device and repeat the angle and differential pressure measurements at the traverse point. In the course of a traverse, if a mark used to properly align the angle-measuring device (e.g., as described in section 18.1.1.1) cannot be located, re-establish the alignment mark before proceeding with the traverse.

8.10 Probe Plugging. Periodically check for plugging of the pressure ports by observing the responses on pressure differential readouts. Plugging causes erratic results or sluggish responses. Rotate the probe to determine whether the readouts respond in the expected direction. If plugging is detected, correct the problem and repeat the affected measurements.

8.11 Static Pressure. Measure the static pressure in the stack or duct using the equipment described in section 6.7.

8.11.1 If a Type DA or DAT probe is used for this measurement, position the probe at or between any traverse point(s) and rotate the probe until a null differential pressure reading is obtained at P_2–P_3. Rotate the probe 90°. Disconnect the P_2 pressure side of the probe and read the pressure P_1-P_{bar} and record as the static pressure. (**Note**: The spherical probe, specified in section 6.1.2, is unable to provide this measurement and shall not be used to take static pressure measurements.)

8.11.2 If a Type S probe is used for this measurement, position the probe at or between any traverse point(s) and rotate the probe until a null differential pressure reading is obtained. Disconnect the tubing from one of the pressure ports; read and record the ΔP. For pressure devices with one-directional scales, if a deflection in the positive direction is noted with the negative side disconnected, then the static pressure is positive. Likewise, if a deflection in the positive direction is noted with the positive side disconnected, then the static pressure is negative.

8.12 Atmospheric Pressure. Determine the atmospheric pressure at the sampling elevation during each test run following the procedure described in section 2.5 of Method 2.

8.13 Molecular Weight. Determine the stack gas dry molecular weight. For combustion processes or processes that emit essentially CO_2, O_2, CO, and N_2, use Method 3 or 3A. For processes emitting essentially air, an analysis need not be conducted; use a dry molecular weight of 29.0. Other methods may be used, if approved by the Administrator.

8.14 Moisture. Determine the moisture content of the stack gas using Method 4 or equivalent.

8.15 Data Recording and Calculations. Record all required data on a form similar to Table 2F–3.

8.15.1 Selection of appropriate calibration curves. Choose the appropriate pair of F_1 and F_2 versus pitch angle calibration curves, created as described in section 10.6.

8.15.2 Pitch angle derivation. Use the appropriate calculation procedures in section 12.2 to find the pitch angle ratios that are applicable at each traverse point. Then, find the pitch angles corresponding to these pitch angle ratios on the ''F_1 versus pitch angle'' curve for the probe.

8.15.3 Velocity calibration coefficient derivation. Use the pitch angle obtained following the procedures described in section 8.15.2 to find the corresponding velocity calibration coefficients from the ''F_2 versus pitch angle'' calibration curve for the probe.

8.15.4 Calculations. Calculate the axial velocity at each traverse point using the equations presented in section 12.2 to account for the yaw and pitch angles of flow. Calculate the test run average stack gas velocity by finding the arithmetic average of the point velocity results in accordance with sections 12.3 and 12.4, and calculate the stack gas volumetric flow rate in accordance with section 12.5 or 12.6, as applicable.

9.0 Quality Control

9.1 Quality Control Activities. In conjunction with the yaw angle determination and the pressure and temperature measurements specified in section 8.9, the following quality control checks should be performed.

9.1.1 Range of the differential pressure gauge. In accordance with the specifications in section 6.4, ensure that the proper differential pressure gauge is being used for the range of πP values encountered. If it is necessary to change to a more sensitive gauge, replace the gauge with a gauge calibrated according to section 10.3.3, perform the leak check described in section 8.4 and the zero check described in section 8.5, and repeat the differential pressure and temperature readings at each traverse point.

9.1.2 Horizontal stability check. For horizontal traverses of a stack or duct, visually check that the probe shaft is maintained in a horizontal position prior to taking a pressure reading. Periodically,

during a test run, the probe's horizontal stability should be verified by placing a carpenter's level, a digital inclinometer, or other angle-measuring device on the portion of the probe sheath that extends outside of the test port. A comparable check should be performed by automated systems.

10.0 Calibration

10.1 Wind Tunnel Qualification Checks. To qualify for use in calibrating probes, a wind tunnel shall have the design features specified in section 6.11 and satisfy the following qualification criteria. The velocity pressure cross-check in section 10.1.1 and axial flow verification in section 10.1.2 shall be performed before the initial use of the wind tunnel and repeated immediately after any alteration occurs in the wind tunnel's configuration, fans, interior surfaces, straightening vanes, controls, or other properties that could reasonably be expected to alter the flow pattern or velocity stability in the tunnel. The owner or operator of a wind tunnel used to calibrate probes according to this method shall maintain records documenting that the wind tunnel meets the requirements of sections 10.1.1 and 10.1.2 and shall provide these records to the Administrator upon request.

10.1.1 Velocity pressure cross-check. To verify that the wind tunnel produces the same velocity at the tested probe head as at the calibration pitot tube impact port, perform the following cross-check. Take three differential pressure measurements at the fixed calibration pitot tube location, using the calibration pitot tube specified in section 6.10, and take three measurements with the calibration pitot tube at the wind tunnel calibration location, as defined in section 3.20. Alternate the measurements between the two positions. Perform this procedure at the lowest and highest velocity settings at which the probes will be calibrated. Record the values on a form similar to Table 2F–4. At each velocity setting, the average velocity pressure obtained at the wind tunnel calibration location shall be within ±2 percent or 2.5 mm H_2O (0.01 in. H_2O), whichever is less restrictive, of the average velocity pressure obtained at the fixed calibration pitot tube location. This comparative check shall be performed at 2.5-cm (1-in.), or smaller, intervals across the full length, width, and depth (if applicable) of the wind tunnel calibration location. If the criteria are not met at every tested point, the wind tunnel calibration location must be redefined, so that acceptable results are obtained at every point. Include the results of the velocity pressure cross-check in the calibration data section of the field test report. (See section 16.1.4.)

10.1.2 Axial flow verification. The following procedures shall be performed to demonstrate that there is fully developed axial flow within the calibration location and at the calibration pitot tube location. Two testing options are available to conduct this check.

10.1.2.1 Using a calibrated 3–D probe. A 3–D probe that has been previously calibrated in a wind tunnel with documented axial flow (as defined in section 3.21) may be used to conduct this check. Insert the calibrated 3–D probe into the wind tunnel test section using the tested probe port. Following the procedures in sections 8.9 and 12.2 of this method, determine the yaw and pitch angles at all the point(s) in the test section where the velocity pressure cross-check, as specified in section 10.1.1, is performed. This includes all the points in the calibration location and the point where the calibration pitot tube will be located. Determine the yaw and pitch angles at each point. Repeat these measurements at the highest and lowest velocities at which the probes will be calibrated. Record the values on a form similar to Table 2F–5. Each measured yaw and pitch angle shall be within ±3° of 0°. Exceeding the limits indicates unacceptable flow in the test section. Until the problem is corrected and acceptable flow is verified by repetition of this procedure, the wind tunnel shall not be used for calibration of probes. Include the results of the axial flow verification in the calibration data section of the field test report. (See section 16.1.4.)

10.1.2.2 Using alternative probes. Axial flow verification may be performed using an uncalibrated prism-shaped 3–D probe (e.g., DA or DAT probe) or an uncalibrated wedge probe. (Figure 2F–11 illustrates a typical wedge probe.) This approach requires use of two ports: the tested probe port and a second port located 90° from the tested probe port. Each port shall provide access to all the points within the wind tunnel test section where the velocity pressure cross-check, as specified in section 10.1.1, is conducted. The probe setup shall include establishing a reference yaw-null position on the probe sheath to serve as the location for installing the angle-measuring device. Physical design features of the DA, DAT, and wedge probes are relied on to determine the reference position. For the DA or DAT probe, this reference position can be determined by setting a digital inclinometer on the flat facet where the P_1 pressure port is located and then identifying the rotational position on the probe sheath where a second angle-measuring device would give the same angle reading. The reference position on a wedge probe shaft can be determined either geometrically or by placing a digital inclinometer on each side of the wedge and rotating the probe until equivalent readings are obtained. With the latter approach, the reference position is the rotational position on the probe sheath where an angle-measuring device would give a reading of 0°. After installing the angle-measuring device in the reference yaw-null position on the probe sheath, determine the yaw angle from the tested port. Repeat this measurement using the 90° offset port, which provides the pitch angle of flow. Determine the yaw and pitch angles at all the point(s) in the test section where the velocity pressure cross-check, as specified in section 10.1.1, is performed. This includes all the points in the wind tunnel calibration location and the point where the calibration pitot tube will be located. Perform this check at the highest and lowest velocities at which the probes will be calibrated. Record the values on a form similar to Table 2F–5. Each measured yaw and pitch angle shall be within ±3° of 0°. Exceeding the limits indicates unacceptable flow in the test section. Until the problem is corrected and acceptable flow is verified by repetition of this procedure, the wind tunnel shall not be used for calibration of probes. Include the results in the probe calibration report.

10.1.3 Wind tunnel audits.

10.1.3.1 Procedure. Upon the request of the Administrator, the owner or operator of a wind tunnel shall calibrate a 3–D audit probe in accordance with the procedures described in sections 10.3 through 10.6. The calibration shall be performed at two velocities and over a pitch angle range that encompasses the velocities and pitch angles typically used for this method at the facility. The resulting calibration data and curves shall be submitted to the Agency in an audit test report. These results shall be compared by the Agency to reference calibrations of the audit probe at the same velocity and pitch angle settings obtained at two different wind tunnels.

10.1.3.2 Acceptance criteria. The audited tunnel's calibration is acceptable if all of the following conditions are satisfied at each velocity and pitch setting for the reference calibration obtained from at least one of the wind tunnels. For pitch angle settings between −15° and +15°, no velocity calibration coefficient (i.e., F_2) may differ from the corresponding reference value by more than 3 percent. For pitch angle settings outside of this range (i.e., less than −15° and greater than +15°), no velocity calibration coefficient may differ by more than 5 percent from the corresponding reference value. If the acceptance criteria are not met, the audited wind tunnel shall not be used to calibrate probes for use under this method until the problems are resolved and acceptable results are obtained upon completion of a subsequent audit.

10.2 Probe Inspection. Before each calibration of a 3–D probe, carefully examine the physical condition of the probe head. Particular attention shall be paid to the edges of the pressure ports and the surfaces surrounding these ports. Any dents, scratches, or asymmetries on the edges of the pressure ports and any scratches or indentations on the surfaces surrounding the pressure ports shall be noted because of the potential effect on the probe's pressure readings. If the probe has been previously calibrated, compare the current condition of the probe's pressure ports and surfaces to the results of the inspection performed during the probe's most recent wind tunnel calibration. Record the results of this inspection on a form and in diagrams similar to Table 2F–1. The information in Table 2F–1 will be used as the basis for comparison during the probe head inspections performed before each subsequent field use.

10.3 Pre-Calibration Procedures. Prior to calibration, a scribe line shall have been placed on the probe in accordance with section 10.4. The yaw angle and velocity calibration procedures shall not begin until the pre-test requirements in sections 10.3.1 through 10.3.4 have been met.

10.3.1 Perform the horizontal straightness check described in section 8.2 on the probe

assembly that will be calibrated in the wind tunnel.

10.3.2 Perform a leak check in accordance with section 8.4.

10.3.3 Except as noted in section 10.3.3.3, calibrate all differential pressure-measuring devices to be used in the probe calibrations, using the following procedures. At a minimum, calibrate these devices on each day that probe calibrations are performed.

10.3.3.1 Procedure. Before each wind tunnel use, all differential pressure-measuring devices shall be calibrated against the reference device specified in section 6.4.3 using a common pressure source. Perform the calibration at three reference pressures representing 30, 60, and 90 percent of the full-scale range of the pressure-measuring device being calibrated. For an inclined-vertical manometer, perform separate calibrations on the inclined and vertical portions of the measurement scale, considering each portion of the scale to be a separate full-scale range. [For example, for a manometer with a 0- to 2.5-cm H_2O (0- to 1-in. H_2O) inclined scale and a 2.5- to 12.7-cm H_2O (1- to 5-in. H_2O) vertical scale, calibrate the inclined portion at 7.6, 15.2, and 22.9 mm H_2O (0.3, 0.6, and 0.9 in. H_2O), and calibrate the vertical portion at 3.8, 7.6, and 11.4 cm H_2O (1.5, 3.0, and 4.5 in. H_2O).] Alternatively, for the vertical portion of the scale, use three evenly spaced reference pressures, one of which is equal to or higher than the highest differential pressure expected in field applications.

10.3.3.2 Acceptance criteria. At each pressure setting, the two pressure readings made using the reference device and the pressure-measuring device being calibrated shall agree to within ±2 percent of full scale of the device being calibrated or 0.5 mm H_2O (0.02 in. H_2O), whichever is less restrictive. For an inclined-vertical manometer, these requirements shall be met separately using the respective full-scale upper limits of the inclined and vertical portions of the scale. Differential pressure-measuring devices not meeting the ±2 percent of full scale or 0.5 mm H_2O (0.02 in. H_2O) calibration requirement shall not be used.

10.3.3.3 Exceptions. Any precision manometer that meets the specifications for a reference device in section 6.4.3 and that is not used for field testing does not require calibration, but must be leveled and zeroed before each wind tunnel use. Any pressure device used exclusively for yaw nulling does not require calibration, but shall be checked for responsiveness to rotation of the probe prior to each wind tunnel use.

10.3.4 Calibrate digital inclinometers on each day of wind tunnel or field testing (prior to beginning testing) using the following procedures. Calibrate the inclinometer according to the manufacturer's calibration procedures. In addition, use a triangular block (illustrated in Figure 2F–12) with a known angle, 0, independently determined using a protractor or equivalent device, between two adjacent sides to verify the inclinometer readings.

Note: If other angle-measuring devices meeting the provisions of section 6.2.3 are used in place of a digital inclinometer, comparable calibration procedures shall be performed on such devices.)

Secure the triangular block in a fixed position. Place the inclinometer on one side of the block (side A) to measure the angle of inclination (R_1). Repeat this measurement on the adjacent side of the block (side B) using the inclinometer to obtain a second angle reading (R_2). The difference of the sum of the two readings from 180° (i.e., $180° - R_1 - R_2$) shall be within ±2° of the known angle, Θ

10.4 Placement of Reference Scribe Line. Prior to the first calibration of a probe, a line shall be permanently inscribed on the main probe sheath to serve as a reference mark for determining yaw angles. Annex C in section 18 of this method gives a guideline for placement of the reference scribe line.

10.4.1 This reference scribe line shall meet the specifications in sections 6.1.6.1 and 6.1.6.3 of this method. To verify that the alignment specification in section 6.1.6.3 is met, secure the probe in a horizontal position and measure the rotational angle of each scribe line and scribe line segment using an angle-measuring device that meets the specifications in section 6.2.1 or 6.2.3. For any scribe line that is longer than 30.5 cm (12 in.), check the line's rotational position at 30.5-cm (12-in.) intervals. For each line segment that is 30.5 cm (12 in.) or less in length, check the rotational position at the two endpoints of the segment. To meet the alignment specification in section 6.1.6.3, the minimum and maximum of all of the rotational angles that are measured along the full length of the main probe must not differ by more than 2°.

Note: A short reference scribe line segment [e.g., 15.2 cm (6 in.) or less in length] meeting the alignment specifications in section 6.1.6.3 is fully acceptable under this method. See section 18.1.1.1 of Annex A for an example of a probe marking procedure, suitable for use with a short reference scribe line.

10.4.2 The scribe line should be placed on the probe first and then its offset from the yaw-null position established (as specified in section 10.5). The rotational position of the reference scribe line relative to the yaw-null position of the probe, as determined by the yaw angle calibration procedure in section 10.5, is defined as the reference scribe line rotational offset, R_{SLO}. The reference scribe line rotational offset shall be recorded and retained as part of the probe's calibration record.

10.4.3 Scribe line for automated probes. A scribe line may not be necessary for an automated probe system if a reference rotational position of the probe is built into the probe system design. For such systems, a ''flat'' (or comparable, clearly identifiable physical characteristic) should be provided on the probe casing or flange plate to ensure that the reference position of the probe assembly remains in a vertical or horizontal position. The rotational offset of the flat (or comparable, clearly identifiable physical characteristic) needed to orient the reference position of the probe assembly shall be recorded and maintained as part of the automated probe system's specifications.

10.5 Yaw Angle Calibration Procedure. For each probe used to measure yaw angles with this method, a calibration procedure shall be performed in a wind tunnel meeting the specifications in section 10.1 to determine the rotational position of the reference scribe line relative to the probe's yaw-null position. This procedure shall be performed on the main probe with all devices that will be attached to the main probe in the field [such as thermocouples or resistance temperature detectors (RTDs)] that may affect the flow around the probe head. Probe shaft extensions that do not affect flow around the probe head need not be attached during calibration. At a minimum, this procedure shall include the following steps.

10.5.1 Align and lock the angle-measuring device on the reference scribe line. If a marking procedure (such as that described in section 18.1.1.1) is used, align the angle-measuring device on a mark within ±1° of the rotational position of the reference scribe line. Lock the angle-measuring device onto the probe sheath at this position.

10.5.2 Zero the pressure-measuring device used for yaw nulling.

10.5.3 Insert the probe assembly into the wind tunnel through the entry port, positioning the probe's impact port at the calibration location. Check the responsiveness of the pressure-measurement device to probe rotation, taking corrective action if the response is unacceptable.

10.5.4 Ensure that the probe is in a horizontal position, using a carpenter's level.

10.5.5 Rotate the probe either clockwise or counterclockwise until a yaw null ($P_2 = P_3$) is obtained.

10.5.6 Use the reading displayed by the angle-measuring device at the yaw-null position to determine the magnitude of the reference scribe line rotational offset, R_{SLO}, as defined in section 3.15. Annex D in section 18 of this method provides a recommended procedure for determining the magnitude of R_{SLO} with a digital inclinometer and a second procedure for determining the magnitude of R_{SLO} with a protractor wheel and pointer device. Table 2F–6 presents an example data form and Table 2F–7 is a look-up table with the recommended procedure. Procedures other than those recommended in Annex D in section 18 may be used, if they can determine R_{SLO} to within ±1° and are explained in detail in the field test report. The algebraic sign of R_{SLO} will either be positive, if the rotational position of the reference scribe line (as viewed from the ''tail'' end of the probe) is clockwise, or negative, if counterclockwise with respect to the probe's yaw-null position. (This is illustrated in Figure 2F–13.)

10.5.7 The steps in sections 10.5.3 through 10.5.6 shall be performed twice at each of the velocities at which the probe will be calibrated (in accordance with section 10.6). Record the values of R_{SLO}.

10.5.8 The average of all of the R_{SLO} values shall be documented as the reference scribe line rotational offset for the probe.

10.5.9 Use of reference scribe line offset. The reference scribe line rotational offset shall be used to determine the yaw angle of flow in accordance with section 8.9.4.

10.6 Pitch Angle and Velocity Pressure Calibrations. Use the procedures in sections 10.6.1 through 10.6.16 to generate an appropriate set (or sets) of pitch angle and velocity pressure calibration curves for each

probe. The calibration procedure shall be performed on the main probe and all devices that will be attached to the main probe in the field (e.g., thermocouple or RTDs) that may affect the flow around the probe head. Probe shaft extensions that do not affect flow around the probe head need not be attached during calibration. (Note: If a sampling nozzle is part of the assembly, a wind tunnel demonstration shall be performed that shows the probe's ability to measure velocity and yaw null is not impaired when the nozzle is drawing a sample.) The calibration procedure involves generating two calibration curves, F_1 versus pitch angle and F_2 versus pitch angle. To generate these two curves, F_1 and F_2 shall be derived using Equations 2F–1 and 2F–2, below. Table 2F–8 provides an example wind tunnel calibration data sheet, used to log the measurements needed to derive these two calibration curves.

10.6.1 Calibration velocities. The tester may calibrate the probe at two nominal wind tunnel velocity settings of 18.3 m/sec and 27.4 m/sec (60 ft/sec and 90 ft/sec) and average the results of these calibrations, as described in section 10.6.16.1, in order to generate a set of calibration curves. If this option is selected, this single set of calibration curves may be used for all field applications over the entire velocity range allowed by the method. Alternatively, the tester may customize the probe calibration for a particular field test application (or for a series of applications), based on the expected average velocity(ies) at the test site(s). If this option is selected, generate each set of calibration curves by calibrating the probe at two nominal wind tunnel velocity settings, at least one of which is greater than or equal to the expected average velocity(ies) for the field application(s), and average the results as described in section 10.6.16.1. Whichever calibration option is selected, the probe calibration coefficients (F_2 values) obtained at the two nominal calibration velocities shall, for the same pitch angle setting, meet the conditions specified in section 10.6.16.

10.6.2 Pitch angle calibration curve ($F-1$) versus pitch angle). The pitch angle calibration involves generating a calibration curve of calculated F_1 values versus tested pitch angles, where F_1 is the ratio of the pitch pressure to the velocity pressure, i.e.,

$$F_1 = \frac{(P_4 - P_5)}{(P_1 - P_2)} \qquad \text{Eq. 2F-1}$$

See Figure 2F–14 for an example F_1 versus pitch angle calibration curve.

10.6.3 Velocity calibration curve (F_2 versus pitch angle). The velocity calibration involves generating a calibration curve of the 3–D probe's F_2 coefficient against the tested pitch angles, where

$$F_2 = C_p \sqrt{\frac{\Delta P_{std}}{(P_1 - P_2)}} \qquad \text{Eq. 2F-2}$$

and

C_p = calibration pitot tube coefficient, and
ΔP_{std} = velocity pressure from the calibration pitot tube.

See Figure 2F–15 for an example F_2 versus pitch angle calibration curve.

10.6.4 Connect the tested probe and calibration pitot probe to their respective pressure-measuring devices. Zero the pressure-measuring devices. Inspect and leak-check all pitot lines; repair or replace, if necessary. Turn on the fan, and allow the wind tunnel air flow to stabilize at the first of the two selected nominal velocity settings.

10.6.5 Position the calibration pitot tube at its measurement location (determined as outlined in section 6.11.4.3), and align the tube so that its tip is pointed directly into the flow. Ensure that the entry port surrounding the tube is properly sealed. The calibration pitot tube may either remain in the wind tunnel throughout the calibration, or be removed from the wind tunnel while measurements are taken with the probe being calibrated.

10.6.6 Set up the pitch protractor plate on the tested probe's entry port to establish the pitch angle positions of the probe to within ±2°.

10.6.7 Check the zero setting of each pressure-measuring device.

10.6.8 Insert the tested probe into the wind tunnel and align it so that its P_1 pressure port is pointed directly into the flow and is positioned within the calibration location (as defined in section 3.20). Secure the probe at the 0° pitch angle position. Ensure that the entry port surrounding the probe is properly sealed.

10.6.9 Read the differential pressure from the calibration pitot tube (ΔP_{std}), and record its value. Read the barometric pressure to within ±2.5 mm Hg (±0.1 in. Hg) and the temperature in the wind tunnel to within 0.6°C (1°F). Record these values on a data form similar to Table 2F–8.

10.6.10 After the tested probe's differential pressure gauges have had sufficient time to stabilize, yaw null the probe, then obtain differential pressure readings for (P_1–P_2) and (P_4–P_5). Record the yaw angle and differential pressure readings. After taking these readings, ensure that the tested probe has remained at the yaw-null position.

10.6.11 Either take paired differential pressure measurements with both the calibration pitot tube and tested probe (according to sections 10.6.9 and 10.6.10) or take readings only with the tested probe (according to section 10.6.10) in 5° increments over the pitch-angle range for which the probe is to be calibrated. The calibration pitch-angle range shall be symmetric around 0° and shall exceed the largest pitch angle expected in the field by 5°. At a minimum, probes shall be calibrated over the range of −15° to +15°. If paired calibration pitot tube and tested probe measurements are not taken at each pitch angle setting, the differential pressure from the calibration pitot tube shall be read, at a minimum, before taking the tested probe's differential pressure reading at the first pitch angle setting and after taking the tested probe's differential pressure readings at the last pitch angle setting in each replicate.

10.6.12 Perform a second replicate of the procedures in sections 10.6.5 through 10.6.11 at the same nominal velocity setting.

10.6.13 For each replicate, calculate the F_1 and F_2 values at each pitch angle. At each pitch angle, calculate the percent difference between the two F_2 values using Equation 2F–3.

$$\%\text{Diff} = \frac{F_2^{max} - F_2^{min}}{F_2^{min}} \times 100\% \qquad \text{Eq. 2F-3}$$

Eq. 2F–3

If the percent difference is less than or equal to 2 percent, calculate an average F_1 value and an average F_2 value at that pitch angle. If the percent difference is greater than 2 percent and less than or equal to 5 percent, perform a third repetition at that angle and calculate an average F_1 value and an average F_2 value using all three repetitions. If the percent difference is greater than 5 percent, perform four additional repetitions at that angle and calculate an average F_1 value and an average F_2 value using all six repetitions. When additional repetitions are required at any pitch angle, move the probe by at least 5° and then return to the specified pitch angle before taking the next measurement. Record the average values on a form similar to Table 2F–9.

10.6.14 Repeat the calibration procedures in sections 10.6.5 through 10.6.13 at the second selected nominal wind tunnel velocity setting.

10.6.15 Velocity drift check. The following check shall be performed, except when paired calibration pitot tube and tested probe pressure measurements are taken at each pitch angle setting. At each velocity setting, calculate the percent difference between consecutive differential pressure measurements made with the calibration pitot tube. If a measurement differs from the previous measurement by more than 2 percent or 0.25 mm H_2O (0.01 in. H_2O), whichever is less restrictive, the calibration data collected between these calibration pitot tube measurements may not be used, and the measurements shall be repeated.

10.6.16 Compare the averaged F_2 coefficients obtained from the calibrations at the two selected nominal velocities, as follows. At each pitch angle setting, use Equation 2F–3 to calculate the difference between the corresponding average F_2 values at the two calibration velocities. At each pitch angle in the −15° to +15° range, the percent difference between the average F_2 values shall not exceed 3.0 percent. For pitch angles outside this range (i.e., less than −15°0 and greater than +15°), the percent difference shall not exceed 5.0 percent.

10.6.16.1 If the applicable specification in section 10.6.16 is met at each pitch angle setting, average the results obtained at the two nominal calibration velocities to produce a calibration record of F_1 and F_2 at each pitch angle tested. Record these values on a form similar to Table 2F–9. From these values, generate one calibration curve representing F_1 versus pitch angle and a second curve representing F_2 versus pitch angle. Computer spreadsheet programs may be used to graph the calibration data and to develop polynomial equations that can be used to calculate pitch angles and axial velocities.

10.6.16.2 If the applicable specification in section 10.6.16 is exceeded at any pitch angle setting, the probe shall not be used unless: (1) the calibration is repeated at that pitch angle and acceptable results are obtained or (2) values of F_1 and F_2 are obtained at two nominal velocities for which the specifications in section 10.6.16 are met across the entire pitch angle range.

10.7 Recalibration. Recalibrate the probe using the procedures in section 10 either within 12 months of its first field use after its most recent calibration or after 10 field tests (as defined in section 3.4), whichever occurs later. In addition, whenever there is visible damage to the 3-D head, the probe shall be recalibrated before it is used again.

10.8 Calibration of pressure-measuring devices used in field tests. Before its initial use in a field test, calibrate each pressure-measuring device (except those used exclusively for yaw nulling) using the three-point calibration procedure described in section 10.3.3. The device shall be recalibrated according to the procedure in section 10.3.3 no later than 90 days after its first field use following its most recent calibration. At the discretion of the tester, more frequent calibrations (e.g., after a field test) may be performed. No adjustments, other than adjustments to the zero setting, shall be made to the device between calibrations.

10.8.1 Post-test calibration check. A single-point calibration check shall be performed on each pressure-measuring device after completion of each field test. At the discretion of the tester, more frequent single-point calibration checks (e.g., after one or more field test runs) may be performed. It is recommended that the post-test check be performed before leaving the field test site. The check shall be performed at a pressure between 50 and 90 percent of full scale by taking a common pressure reading with the tested device and a reference pressure-measuring device (as described in section 6.4.4) or by challenging the tested device with a reference pressure source (as described in section 6.4.4) or by performing an equivalent check using a reference device approved by the Administrator.

10.8.2 Acceptance criterion. At the selected pressure setting, the pressure readings made using the reference device and the tested device shall agree to within 3 percent of full scale of the tested device or 0.8 mm H_2O (0.03 in. H_2O), whichever is less restrictive. If this specification is met, the test data collected during the field test are valid. If the specification is not met, all test data collected since the last successful calibration or calibration check are invalid and shall be repeated using a pressure-measuring device with a current, valid calibration. Any device that fails the calibration check shall not be used in a field test until a successful recalibration is performed according to the procedures in section 10.3.3.

10.9 Temperature Gauges. Same as Method 2, section 4.3. The alternative thermocouple calibration procedures outlined in Emission Measurement Center (EMC) Approved Alternative Method (ALT–011) ''Alternative Method 2 Thermocouple Calibration Procedure'' may be performed. Temperature gauges shall be calibrated no more than 30 days prior to the start of a field test or series of field tests and recalibrated no more than 30 days after completion of a field test or series of field tests.

10.10 Barometer. Same as Method 2, section 4.4. The barometer shall be calibrated no more than 30 days prior to the start of a field test or series of field tests.

11.0 Analytical Procedure

Sample collection and analysis are concurrent for this method (see section 8.0).

12.0 Data Analysis and Calculations

These calculations use the measured yaw angle, derived pitch angle, and the differential pressure and temperature measurements at individual traverse points to derive the axial flue gas velocity ($v_{a(i)}$) at each of those points. The axial velocity values at all traverse points that comprise a full stack or duct traverse are then averaged to obtain the average axial flue gas velocity (v_a (avg)). Round off figures only in the final calculation of reported values.

12.1 Nomenclature

A = Cross-sectional area of stack or duct, m^2 (ft^2).

B_{ws} = Water vapor in the gas stream (from Method 4 or alternative), proportion by volume.

Kp = Conversion factor (a constant),

$$34.97\frac{m}{sec}\left[\frac{(g/g\text{-}mole)(mm\ Hg)}{(^\circ K)(mm\ H_2O)}\right]^{1/2}$$

for the metric system, and

$$85.49\frac{ft}{sec}\left[\frac{(lb/lb\text{-}mole)(in.\ Hg)}{(^\circ R)(in.\ H_2O)}\right]^{1/2}$$

for the English system.

M_d = Molecular weight of stack or duct gas, dry basis (see section 8.13), g/g-mole (lb/lb-mole).

M_s = Molecular weight of stack or duct gas, wet basis, g/g-mole (lb/lb-mole).

$$M_s = M_d(1-B_{ws}) + 18.0B_{ws} \qquad \text{Eq. 2F-4}$$

P_{bar} = Barometric pressure at measurement site, mm Hg (in. Hg).

P_g = Stack or duct static pressure, mm H_2O (in. H_2O).

P_s = Absolute stack or duct pressure, mm Hg (in. Hg),

$$P_s = P_{bar} + \frac{P_g}{13.6} \qquad \text{Eq. 2F-5}$$

P_{std} = Standard absolute pressure, 760 mm Hg (29.92 in. Hg).

13.6 = Conversion from mm H_2O (in. H_2O) to mm Hg (in. Hg).

Q_{sd} = Average dry-basis volumetric stack or duct gas flow rate corrected to standard conditions, dscm/hr (dscf/hr).

Q_{sw} = Average wet-basis volumetric stack or duct gas flow rate corrected to standard conditions, wscm/hr (wscf/hr).

$T_{s(avg)}$ = Average absolute stack or duct gas temperature across all traverse points.

$t_{s(i)}$ = Stack or duct gas temperature, C (F), at traverse point i.

$T_{s(i)}$ = Absolute stack or duct gas temperature, K (R), at traverse point i,

$$T_{s(i)} = 273 + t_{s(i)} \qquad \text{Eq. 2F-6}$$

for the metric system, and

$$T_{s(i)} = 460 + t_{s(i)} \qquad \text{Eq. 2F-7}$$

for the English system.

T_{std} = Standard absolute temperature, 293°K (528°R).

$F_{1(i)}$ = Pitch angle ratio, applicable at traverse point i, dimensionless.

$F_{2(i)}$ = 3-D probe velocity calibration coefficient, applicable at traverse point i, dimensionless.

$(P_4\text{-}P_5)_i$ = Pitch differential pressure of stack or duct gas flow, mm H_2O (in. H_2O), at traverse point i.

$(P_1\text{-}P_2)_i$ = Velocity head (differential pressure) of stack or duct gas flow, mm H_2O (in. H_2O), at traverse point i.

$v_{a(i)}$ = Reported stack or duct gas axial velocity, m/sec (ft/sec), at traverse point i.

$v_{a(avg)}$ = Average stack or duct gas axial velocity, m/sec (ft/sec), across all traverse points.

3,600 = Conversion factor, sec/hr.

18.0 = Molecular weight of water, g/g-mole (lb/lb-mole).

$\theta_{y(i)}$ = Yaw angle, degrees, at traverse point i.

$\theta_{p(i)}$ = Pitch angle, degrees, at traverse point i.

n = Number of traverse points.

12.2 Traverse Point Velocity Calculations. Perform the following calculations from the measurements obtained at each traverse point.

12.2.1 Selection of calibration curves. Select calibration curves as described in section 10.6.1.

12.2.2 Traverse point pitch angle ratio. Use Equation 2F–1, as described in section 10.6.2, to calculate the pitch angle ratio, $F_{1(i)}$, at each traverse point.

12.2.3 Pitch angle. Use the pitch angle ratio, $F_{1(i)}$, to derive the pitch angle, $\theta_{p(i)}$, at traverse point i from the F_1 versus pitch angle calibration curve generated under section 10.6.16.1.

12.2.4 Velocity calibration coefficient. Use the pitch angle, $\theta_{p(i)}$, to obtain the probe velocity calibration coefficient, $F_{2(i)}$, at traverse point i from the ''velocity pressure calibration curve,'' i.e., the F_2 versus pitch angle calibration curve generated under section 10.6.16.1.

12.2.5 Axial velocity. Use the following equation to calculate the axial velocity, $v_{a(i)}$, from the differential pressure $(P_1\text{-}P_2)_i$ and yaw angle, $\theta_{y(i)}$, measured at traverse point i and the previously calculated values for the velocity calibration coefficient, $F_{2(i)}$, absolute stack or duct standard temperature, $T_{s(i)}$, absolute stack or duct pressure, P_s, molecular weight, M_s, and pitch angle, ''$\theta_{p(i)}$.

$$v_{a(i)} = K_p F_{2(i)} \sqrt{\frac{(P_1 - P_2)_i T_{s(i)}}{P_s M_s}} \left(\cos\theta_{y(i)}\right)\left(\cos\theta_{p(i)}\right) \qquad \text{Eq. 2F-8}$$

12.2.6 Handling multiple measurements at a traverse point. For pressure or temperature devices that take multiple measurements at a traverse point, the multiple measurements (or where applicable, their square roots) may first be averaged and the resulting average values used in the equations above. Alternatively, the individual measurements may be used in the equations above and the resulting multiple calculated values may then be averaged to obtain a single traverse point value. With either approach, all of the individual measurements recorded at a traverse point must be used in calculating the applicable traverse point value.

12.3 Average Axial Velocity in Stack or Duct. Use the reported traverse point axial velocity in the following equation.

$$v_{a(avg)} = \frac{\sum_{i=1}^{n} v_{a(i)}}{n} \qquad \text{Eq. 2F-9}$$

12.4 Acceptability of Results. The test results are acceptable and the calculated value of $v_{a(avg)}$ may be reported as the average axial velocity for the test run if the conditions in either section 12.4.1 or 12.4.2 are met.

12.4.1 The calibration curves were generated at nominal velocities of 18.3 m/sec and 27.4 m/sec (60 ft/sec and 90 ft/sec).

12.4.2 The calibration curves were generated at nominal velocities other than 18.3 m/sec and 27.4 m/sec (60 ft/sec and 90 ft/sec), and the value of $v_{a(avg)}$ obtained using Equation 2F–9 is less than or equal to at least one of the nominal velocities used to derive the F_1 and F_2 calibration curves.

12.4.3 If the conditions in neither section 12.4.1 nor section 12.4.2 are met, the test results obtained in Equation 2F–9 are not acceptable, and the steps in sections 12.2 and 12.3 must be repeated using a set of F_1 and F_2 calibration curves that satisfies the conditions specified in section 12.4.1 or 12.4.2.

12.5 Average Gas Wet Volumetric Flow Rate in Stack or Duct. Use the following equation to compute the average volumetric flow rate on a wet basis.

$$Q_{sw} = 3{,}600\left(v_{a(avg)}\right)(A)\left(\frac{T_{std}}{T_{s(avg)}}\right)\left(\frac{P_s}{P_{std}}\right) \qquad \text{Eq. 2F-10}$$

12.6 Average Gas Dry Volumetric Flow Rate in Stack or Duct. Use the following equation to compute the average volumetric flow rate on a dry basis.

$$Q_{sd} = 3{,}600\left(1 - B_{ws}\right)\left(v_{a(avg)}\right)(A)\left(\frac{T_{std}}{T_{s(avg)}}\right)\left(\frac{P_s}{P_{std}}\right) \qquad \text{Eq. 2F-11}$$

13.0 Method Performance. [Reserved]

14.0 Pollution Prevention. [Reserved]

15.0 Waste Management. [Reserved]

16.0 Reporting

16.1 Field Test Reports. Field test reports shall be submitted to the Agency according to applicable regulatory requirements. Field test reports should, at a minimum, include the following elements.

16.1.1 Description of the source. This should include the name and location of the test site, descriptions of the process tested, a description of the combustion source, an accurate diagram of stack or duct cross-sectional area at the test site showing the dimensions of the stack or duct, the location of the test ports, and traverse point locations and identification numbers or codes. It should also include a description and diagram of the stack or duct layout, showing the distance of the test location from the nearest upstream and downstream disturbances and all structural elements (including breachings, baffles, fans, straighteners, etc.) affecting the flow pattern. If the source and test location descriptions have been previously submitted to the Agency in a document (e.g., a monitoring plan or test plan), referencing the document in lieu of including this information in the field test report is acceptable.

16.1.2 Field test procedures. These should include a description of test equipment and test procedures. Testing conventions, such as traverse point numbering and measurement sequence (e.g., sampling from center to wall, or wall to center), should be clearly stated. Test port identification and directional reference for each test port should be included on the appropriate field test data sheets.

16.1.3 Field test data.

16.1.3.1 Summary of results. This summary should include the dates and times of testing and the average axial gas velocity and the average flue gas volumetric flow results for each run and tested condition.

16.1.3.2 Test data. The following values for each traverse point should be recorded and reported:

(a) P_1-P_2 and P_4-P_5 differential pressures
(b) Stack or duct gas temperature at traverse point i ($t_{s(i)}$)
(c) Absolute stack or duct gas temperature at traverse point i ($T_{s(i)}$)
(d) Yaw angle at each traverse point i ($\theta_{y(i)}$)
(e) Pitch angle at each traverse point i ($\theta_{p(i)}$)
(f) Stack or duct gas axial velocity at traverse point i ($v_{a(i)}$)

16.1.3.3 The following values should be reported once per run:

(a) Water vapor in the gas stream (from Method 4 or alternative), proportion by volume (B_{ws}), measured at the frequency specified in the applicable regulation
(b) Molecular weight of stack or duct gas, dry basis (M_d)
(c) Molecular weight of stack or duct gas, wet basis (M_s)
(d) Stack or duct static pressure (P_g)
(e) Absolute stack or duct pressure (P_s)
(f) Carbon dioxide concentration in the flue gas, dry basis ($\%_d$ CO_2)
(g) Oxygen concentration in the flue gas, dry basis ($\%_d$ O_2)
(h) Average axial stack or duct gas velocity ($v_{a(avg)}$) across all traverse points
(i) Gas volumetric flow rate corrected to standard conditions, dry or wet basis as required by the applicable regulation (Q_{sd} or Q_{sw})

16.1.3.4 The following should be reported once per complete set of test runs:

(a) Cross-sectional area of stack or duct at the test location (A)
(b) Measurement system response time (sec)
(c) Barometric pressure at measurement site (P_{bar})

16.1.4 Calibration data. The field test report should include calibration data for all probes and test equipment used in the field test. At a minimum, the probe calibration data reported to the Agency should include the following:

(a) Date of calibration
(b) Probe type
(c) Probe identification number(s) or code(s)
(d) Probe inspection sheets

(e) Pressure measurements and intermediate calculations of F_1 and F_2 at each pitch angle used to obtain calibration curves in accordance with section 10.6 of this method
(f) Calibration curves (in graphic or equation format) obtained in accordance with sections 10.6.11 of this method
(g) Description and diagram of wind tunnel used for the calibration, including dimensions of cross-sectional area and position and size of the test section
(h) Documentation of wind tunnel qualification tests performed in accordance with section 10.1 of this method

16.1.5 Quality Assurance. Specific quality assurance and quality control procedures used during the test should be described.

17.0 Bibliography

(1) 40 CFR Part 60, Appendix A, Method 1—Sample and velocity traverses for stationary sources.
(2) 40 CFR Part 60, Appendix A, Method 2H—Determination of stack gas velocity taking into account velocity decay near the stack wall.
(3) 40 CFR Part 60, Appendix A, Method 2—Determination of stack gas velocity and volumetric flow rate (Type S pitot tube).
(4) 40 CFR Part 60, Appendix A, Method 3—Gas analysis for carbon dioxide, oxygen, excess air, and dry molecular weight.
(5) 40 CFR Part 60, Appendix A, Method 3A—Determination of oxygen and carbon dioxide concentrations in emissions from stationary sources (instrumental analyzer procedure).
(6) 40 CFR Part 60, Appendix A, Method 4—Determination of moisture content in stack gases.
(7) Emission Measurement Center (EMC) Approved Alternative Method (ALT–011) ''Alternative Method 2 Thermocouple Calibration Procedure.''
(8) Electric Power Research Institute, Interim Report EPRI TR–106698, ''Flue Gas Flow Rate Measurement Errors,'' June 1996.
(9) Electric Power Research Institute, Final Report EPRI TR–108110, ''Evaluation of Heat Rate Discrepancy from Continuous Emission Monitoring Systems,'' August 1997.
(10) Fossil Energy Research Corporation, Final Report, ''Velocity Probe Tests in Non-axial Flow Fields,'' November 1998, Prepared for the U.S. Environmental Protection Agency.
(11) Fossil Energy Research Corporation, ''Additional Swirl Tunnel Tests: E–DAT and T–DAT Probes,'' February 24, 1999, Technical Memorandum Prepared for U.S. Environmental Protection Agency, P.O. No. 7W–1193–NALX.
(12) Massachusetts Institute of Technology, Report WBWT–TR–1317, ''Calibration of Eight Wind Speed Probes Over a Reynolds Number Range of 46,000 to 725,000 Per Foot, Text and Summary Plots,'' Plus appendices, October 15, 1998, Prepared for The Cadmus Group, Inc.
(13) National Institute of Standards and Technology, Special Publication 250, ''NIST Calibration Services Users Guide 1991,'' Revised October 1991, U.S. Department of Commerce, p. 2.
(14) National Institute of Standards and Technology, 1998, ''Report of Special Test of Air Speed Instrumentation, Four Prandtl Probes, Four S–Type Probes, Four French Probes, Four Modified Kiel Probes,'' Prepared for the U.S. Environmental Protection Agency under IAG #DW13938432–01–0.
(15) National Institute of Standards and Technology, 1998, ''Report of Special Test of Air Speed Instrumentation, Five Autoprobes,'' Prepared for the U.S. Environmental Protection Agency under IAG #DW13938432–01–0.
(16) National Institute of Standards and Technology, 1998, ''Report of Special Test of Air Speed Instrumentation, Eight Spherical Probes,'' Prepared for the U.S. Environmental Protection Agency under IAG #DW13938432–01–0.
(17) National Institute of Standards and Technology, 1998, ''Report of Special Test of Air Speed Instrumentation, Four DAT Probes,'' Prepared for the U.S. Environmental Protection Agency under IAG #DW13938432–01–0.
(18) Norfleet, S.K., ''An Evaluation of Wall Effects on Stack Flow Velocities and Related Overestimation Bias in EPA's Stack Flow Reference Methods,'' EPRI CEMS User's Group Meeting, New Orleans, Louisiana, May 13–15, 1998.
(19) Page, J.J., E.A. Potts, and R.T. Shigehara, ''3–D Pitot Tube Calibration Study,'' EPA Contract No. 68–D1–0009, Work Assignment No. I–121, March 11, 1993.
(20) Shigehara, R.T., W.F. Todd, and W.S. Smith, ''Significance of Errors in Stack Sampling Measurements,'' Presented at the Annual Meeting of the Air Pollution Control Association, St. Louis, Missouri, June 14–19, 1970.
(21) The Cadmus Group, Inc., May 1999, ''EPA Flow Reference Method Testing and Analysis: Findings Report,'' EPA/430–R–99–009.
(22) The Cadmus Group, Inc., 1998, ''EPA Flow Reference Method Testing and Analysis: Data Report, Texas Utilities, DeCordova Steam Electric Station, Volume I: Test Description and Appendix A (Data Distribution Package),'' EPA/430–R–98–015a.
(23) The Cadmus Group, Inc., 1998, ''EPA Flow Reference Method Testing and Analysis: Data Report, Texas Utilities, Lake Hubbard Steam Electric Station, Volume I: Test Description and Appendix A (Data Distribution Package),'' EPA/430–R–98–017a.
(24) The Cadmus Group, Inc., 1998, ''EPA Flow Reference Method Testing and Analysis: Data Report, Pennsylvania Electric Co., G.P.U. Genco Homer City Station: Unit 1, Volume I: Test Description and Appendix A (Data Distribution Package),'' EPA/430–R–98–018a.
(25) The Cadmus Group, Inc., 1997, ''EPA Flow Reference Method Testing and Analysis: Wind Tunnel Experimental Results,'' EPA/430–R–97–013.

18.0 Annexes

Annex A, C, and D describe recommended procedures for meeting certain provisions in sections 8.3, 10.4, and 10.5 of this method. Annex B describes procedures to be followed when using the protractor wheel and pointer assembly to measure yaw angles, as provided under section 8.9.1.

18.1 Annex A—Rotational Position Check. The following are recommended procedures that may be used to satisfy the rotational position check requirements of section 8.3 of this method and to determine the angle-measuring device rotational offset (RADO).

18.1.1 Rotational position check with probe outside stack. Where physical constraints at the sampling location allow full assembly of the probe outside the stack and insertion into the test port, the following procedures should be performed before the start of testing. Two angle-measuring devices that meet the specifications in section 6.2.1 or 6.2.3 are required for the rotational position check. An angle measuring device whose position can be independently adjusted (e.g., by means of a set screw) after being locked into position on the probe sheath shall not be used for this check unless the independent adjustment is set so that the device performs exactly like a device without the capability for independent adjustment. That is, when aligned on the probe such a device must give the same reading as a device that does not have the capability of being independently adjusted. With the fully assembled probe (including probe shaft extensions, if any) secured in a horizontal position, affix one yaw angle-measuring device to the probe sheath and lock it into position on the reference scribe line specified in section 6.1.6.1. Position the second angle-measuring device using the procedure in section 18.1.1.1 or 18.1.1.2.

18.1.1.1 Marking procedure. The procedures in this section should be performed at each location on the fully assembled probe where the yaw angle-measuring device will be mounted during the velocity traverse. Place the second yaw angle-measuring device on the main probe sheath (or extension) at the position where a yaw angle will be measured during the velocity traverse. Adjust the position of the second angle-measuring device until it indicates the same angle (±1°) as the reference device, and affix the second device to the probe sheath (or extension). Record the angles indicated by the two angle-measuring devices on a form similar to Table 2F–2. In this position, the second angle-measuring device is considered to be properly positioned for yaw angle measurement. Make a mark, no wider than 1.6 mm (1/16 in.), on the probe sheath (or extension), such that the yaw angle-measuring device can be re-affixed at this same properly aligned position during the velocity traverse.

18.1.1.2 Procedure for probe extensions with scribe lines. If, during a velocity traverse the angle-measuring device will be affixed to a probe extension having a scribe line as specified in section 6.1.6.2, the following procedure may be used to align the extension's scribe line with the reference scribe line instead of marking the extension as described in section 18.1.1.1. Attach the probe extension to the main probe. Align and lock the second angle-measuring device on the probe extension's scribe line. Then, rotate the extension until both measuring devices

indicate the same angle (±1°). Lock the extension at this rotational position. Record the angles indicated by the two angle-measuring devices on a form similar to Table 2F–2. An angle-measuring device may be aligned at any position on this scribe line during the velocity traverse, if the scribe line meets the alignment specification in section 6.1.6.3.

18.1.1.3 Post-test rotational position check. If the fully assembled probe includes one or more extensions, the following check should be performed immediately after the completion of a velocity traverse. At the discretion of the tester, additional checks may be conducted after completion of testing at any sample port. Without altering the alignment of any of the components of the probe assembly used in the velocity traverse, secure the fully assembled probe in a horizontal position. Affix an angle-measuring device at the reference scribe line specified in section 6.1.6.1. Use the other angle-measuring device to check the angle at each location where the device was checked prior to testing. Record the readings from the two angle-measuring devices.

18.1.2 Rotational position check with probe in stack. This section applies only to probes that, due to physical constraints, cannot be inserted into the test port as fully assembled with all necessary extensions needed to reach the inner-most traverse point(s).

18.1.2.1 Perform the out-of-stack procedure in section 18.1.1 on the main probe and any attached extensions that will be initially inserted into the test port.

18.1.2.2 Use the following procedures to perform additional rotational position check(s) with the probe in the stack, each time a probe extension is added. Two angle-measuring devices are required. The first of these is the device that was used to measure yaw angles at the preceding traverse point, left in its properly aligned measurement position. The second angle-measuring device is positioned on the added probe extension. Use the applicable procedures in section 18.1.1.1 or 18.1.1.2 to align, adjust, lock, and mark (if necessary) the position of the second angle-measuring device to within ±1° of the first device. Record the readings of the two devices on a form similar to Table 2F–2.

18.1.2.3 The procedure in section 18.1.2.2 should be performed at the first port where measurements are taken. The procedure should be repeated each time a probe extension is re-attached at a subsequent port, unless the probe extensions are designed to be locked into a mechanically fixed rotational position (e.g., through use of interlocking grooves), which can be reproduced from port to port as specified in section 8.3.5.2.

18.2 Annex B—Angle Measurement Protocol for Protractor Wheel and Pointer Device. The following procedure shall be used when a protractor wheel and pointer assembly, such as the one described in section 6.2.2 and illustrated in Figure 2F–7 is used to measure the yaw angle of flow. With each move to a new traverse point, unlock, re-align, and re-lock the probe, angle-pointer collar, and protractor wheel to each other. At each such move, particular attention is required to ensure that the scribe line on the angle pointer collar is either aligned with the reference scribe line on the main probe sheath or is at the rotational offset position established under section 8.3.1. The procedure consists of the following steps:

18.2.1 Affix a protractor wheel to the entry port for the test probe in the stack or duct.

18.2.2 Orient the protractor wheel so that the 0° mark corresponds to the longitudinal axis of the stack or duct. For stacks, vertical ducts, or ports on the side of horizontal ducts, use a digital inclinometer meeting the specifications in section 6.2.1 to locate the 0° orientation. For ports on the top or bottom of horizontal ducts, identify the longitudinal axis at each test port and permanently mark the duct to indicate the 0° orientation. Once the protractor wheel is properly aligned, lock it into position on the test port.

18.2.3 Move the pointer assembly along the probe sheath to the position needed to take measurements at the first traverse point. Align the scribe line on the pointer collar with the reference scribe line or at the rotational offset position established under section 8.3.1. Maintaining this rotational alignment, lock the pointer device onto the probe sheath. Insert the probe into the entry port to the depth needed to take measurements at the first traverse point.

18.2.4 Perform the yaw angle determination as specified in sections 8.9.3 and 8.9.4 and record the angle as shown by the pointer on the protractor wheel. Then, take velocity pressure and temperature measurements in accordance with the procedure in section 8.9.5. Perform the alignment check described in section 8.9.6.

18.2.5 After taking velocity pressure measurements at that traverse point, unlock the probe from the collar and slide the probe through the collar to the depth needed to reach the next traverse point.

18.2.6 Align the scribe line on the pointer collar with the reference scribe line on the main probe or at the rotational offset position established under section 8.3.1. Lock the collar onto the probe.

18.2.7 Repeat the steps in sections 18.2.4 through 18.2.6 at the remaining traverse points accessed from the current stack or duct entry port.

18.2.8 After completing the measurement at the last traverse point accessed from a port, verify that the orientation of the protractor wheel on the test port has not changed over the course of the traverse at that port. For stacks, vertical ducts, or ports on the side of horizontal ducts, use a digital inclinometer meeting the specifications in section 6.2.1 to check the rotational position of the 0° mark on the protractor wheel. For ports on the top or bottom of horizontal ducts, observe the alignment of the angle wheel 0° mark relative to the permanent 0° mark on the duct at that test port. If these observed comparisons exceed ±2° of 0°, all angle and pressure measurements taken at that port since the protractor wheel was last locked into position on the port shall be repeated.

18.2.9 Move to the next stack or duct entry port and repeat the steps in sections 18.2.1 through 18.2.8.

18.3 Annex C—Guideline for Reference Scribe Line Placement. Use of the following guideline is recommended to satisfy the requirements of section 10.4 of this method. The rotational position of the reference scribe line should be either 90° or 180° from the probe's impact pressure port.

18.4 Annex D—Determination of Reference Scribe Line Rotational Offset. The following procedures are recommended for determining the magnitude and sign of a probe's reference scribe line rotational offset, R_{SLO}. Separate procedures are provided for two types of angle-measuring devices: digital inclinometers and protractor wheel and pointer assemblies.

18.4.1 Perform the following procedures on the main probe with all devices that will be attached to the main probe in the field [such as thermocouples or resistance temperature detectors (RTDs)] that may affect the flow around the probe head. Probe shaft extensions that do not affect flow around the probe head need not be attached during calibration.

18.4.2 The procedures below assume that the wind tunnel duct used for probe calibration is horizontal and that the flow in the calibration wind tunnel is axial as determined by the axial flow verification check described in section 10.1.2. Angle-measuring devices are assumed to display angles in alternating 0° to 90° and 90° to 0° intervals. If angle-measuring devices with other readout conventions are used or if other calibration wind tunnel duct configurations are used, make the appropriate calculational corrections.

18.4.2.1 Position the angle-measuring device in accordance with one of the following procedures.

18.4.2.1.1 If using a digital inclinometer, affix the calibrated digital inclinometer to the probe. If the digital inclinometer can be independently adjusted after being locked into position on the probe sheath (e.g., by means of a set screw), the independent adjustment must be set so that the device performs exactly like a device without the capability for independent adjustment. That is, when aligned on the probe the device must give the same readings as a device that does not have the capability of being independently adjusted. Either align it directly on the reference scribe line or on a mark aligned with the scribe line determined according to the procedures in section 18.1.1.1. Maintaining this rotational alignment, lock the digital inclinometer onto the probe sheath.

18.4.2.1.2 If using a protractor wheel and pointer device, orient the protractor wheel on the test port so that the 0° mark is aligned with the longitudinal axis of the wind tunnel duct. Maintaining this alignment, lock the wheel into place on the wind tunnel test port. Align the scribe line on the pointer collar with the reference scribe line or with a mark aligned with the reference scribe line, as determined under section 18.1.1.1. Maintaining this rotational alignment, lock the pointer device onto the probe sheath.

18.4.2.2 Zero the pressure-measuring device used for yaw nulling.

18.4.2.3 Insert the probe assembly into the wind tunnel through the entry port,

positioning the probe's impact port at the calibration location. Check the responsiveness of the pressure-measuring device to probe rotation, taking corrective action if the response is unacceptable.

18.4.2.4 Ensure that the probe is in a horizontal position using a carpenter's level.

18.4.2.5 Rotate the probe either clockwise or counterclockwise until a yaw null (P_2=P_3) is obtained.

18.4.2.6 Read and record the value of T_{null}, the angle indicated by the angle-measuring device at the yaw-null position. Record the angle reading on a form similar to Table 2F–6. Do not associate an algebraic sign with this reading.

18.4.2.7 Determine the magnitude and algebraic sign of the reference scribe line rotational offset, R_{SLO}. The magnitude of R_{SLO} will be equal to either T_{null} or ($90° - T_{null}$), depending on the angle-measuring device used. (See Table 2F–7 for a summary.) The algebraic sign of R_{SLO} will either be positive, if the rotational position of the reference scribe line is clockwise, or negative, if counterclockwise with respect to the probe's yaw-null position. Figure 2F–13 illustrates how the magnitude and sign of R_{SLO} are determined.

18.4.2.8 Perform the steps in sections 18.4.2.3 through 18.4.2.7 twice at each of the two calibration velocities selected for the probe under section 10.6. Record the values of R_{SLO} in a form similar to Table 2F–6.

18.4.2.9 The average of all R_{SLO} values is the reference scribe line rotational offset for the probe.

BILLING CODE 6560–50–P

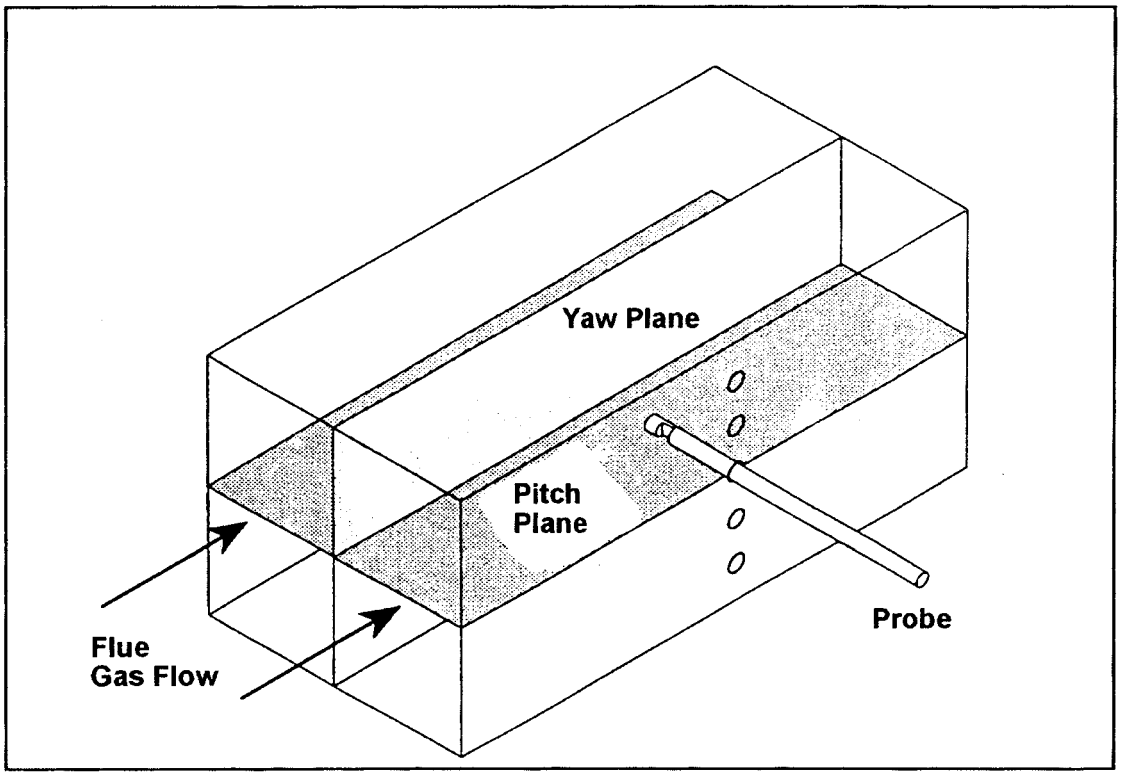

Figure 2F-1. Illustration of yaw and pitch planes in stack or duct.

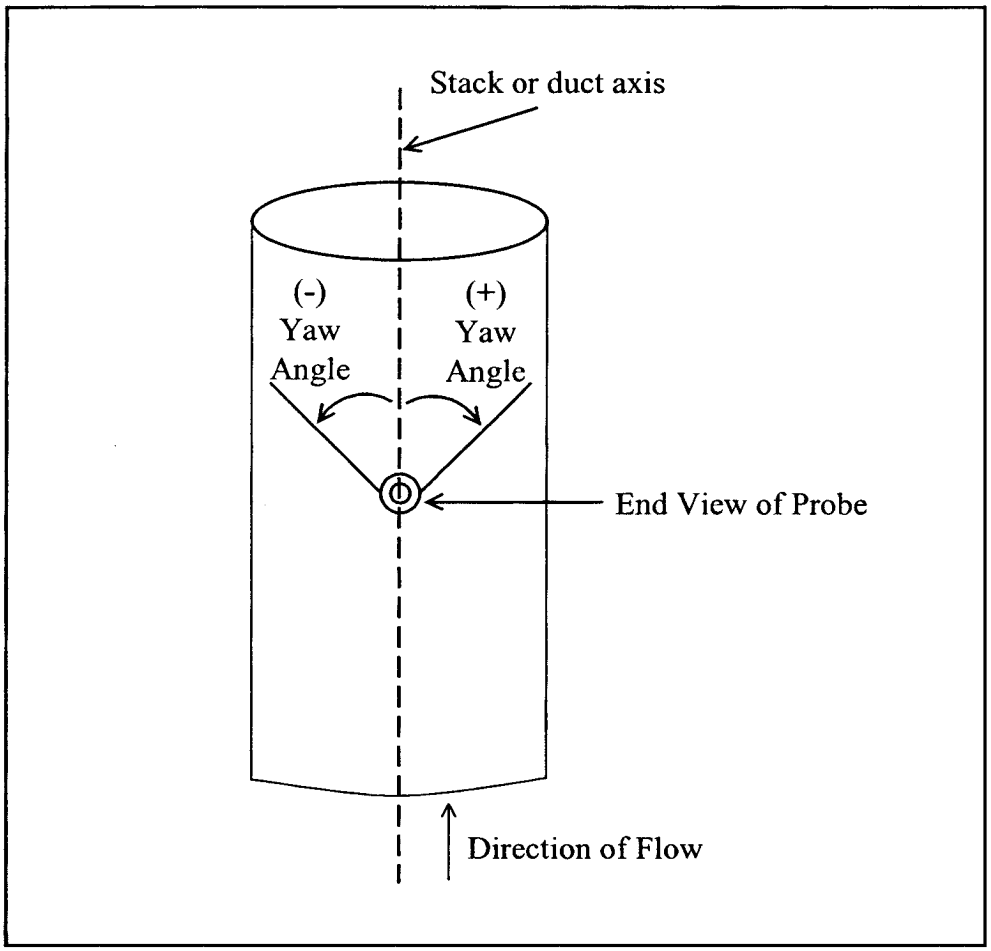

Figure 2F-2. Illustration of probe rotation representing positive and negative yaw angles.

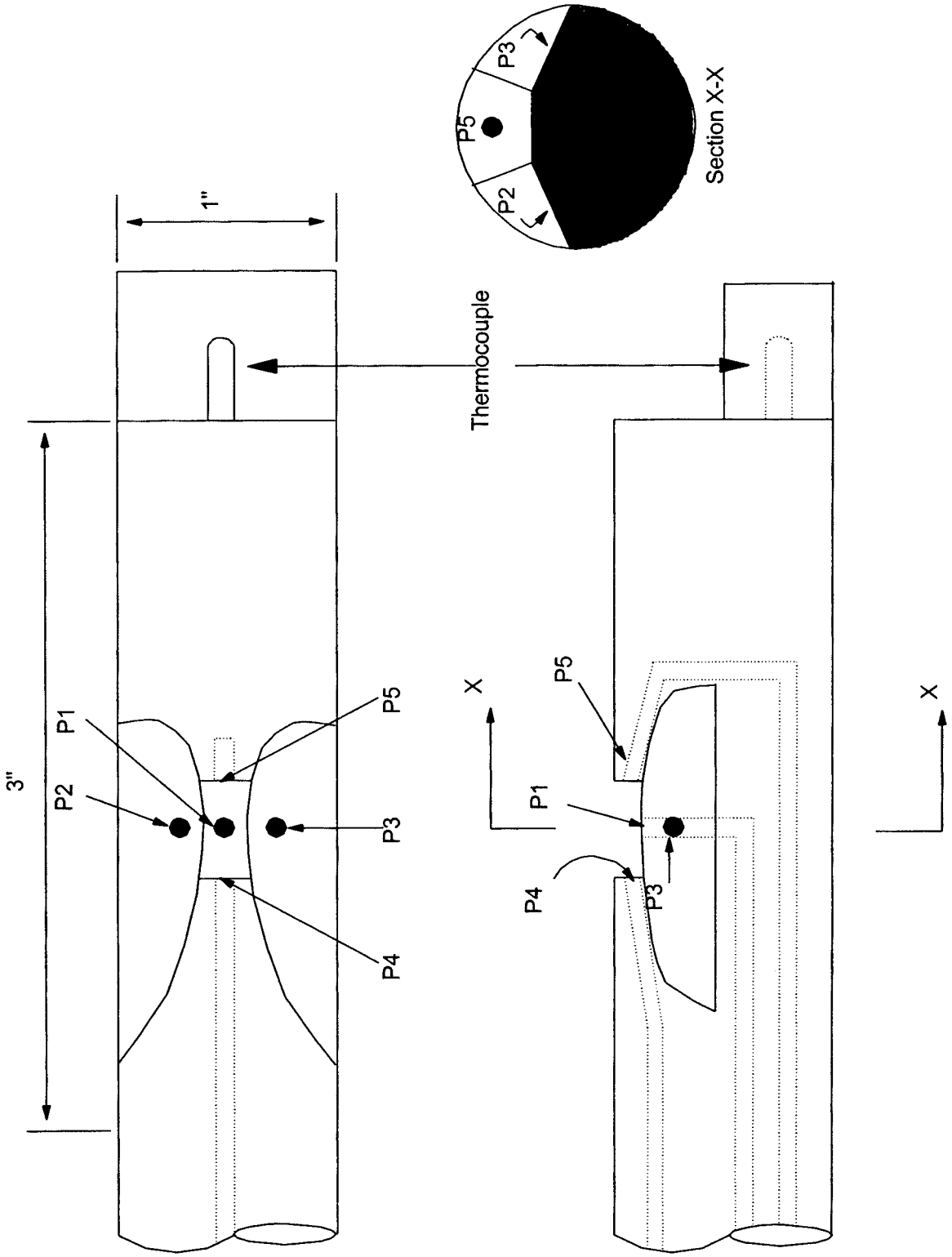

Figure 2F-3. Illustration of a five-hole prism-shaped (DAT) probe.

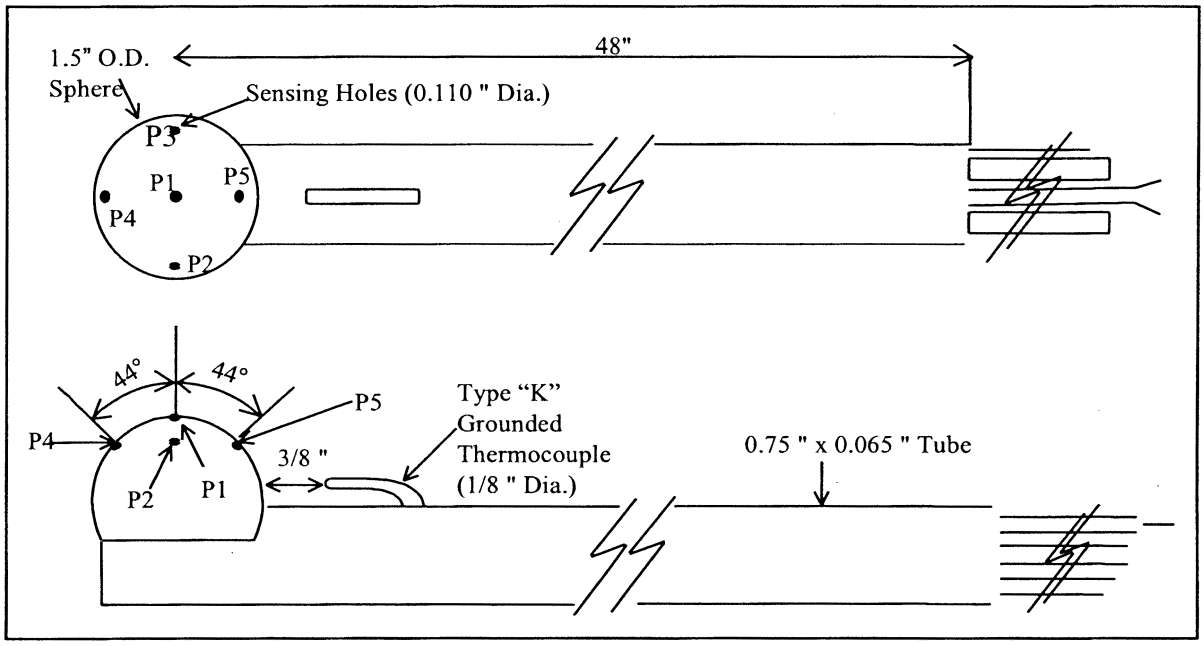

Figure 2F-4. Illustration of front and side view of spherical probe.

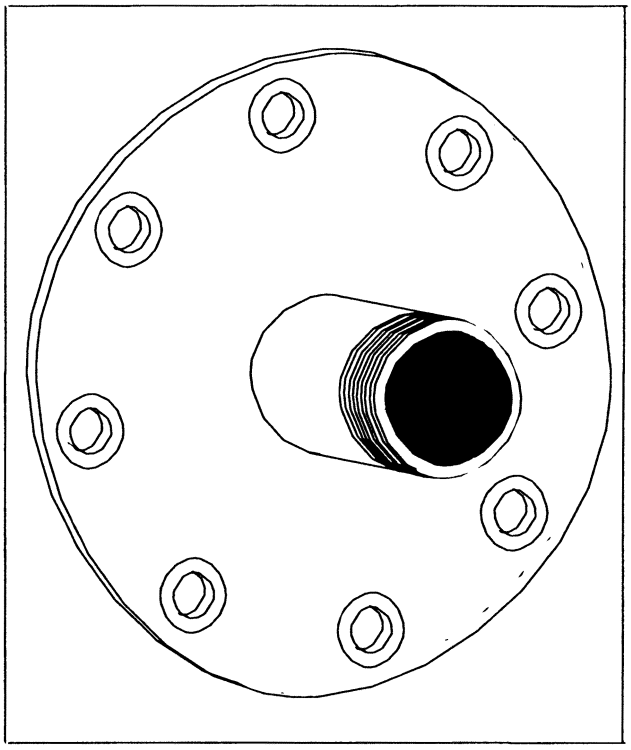

Figure 2F-5. Example bushing sleeve.

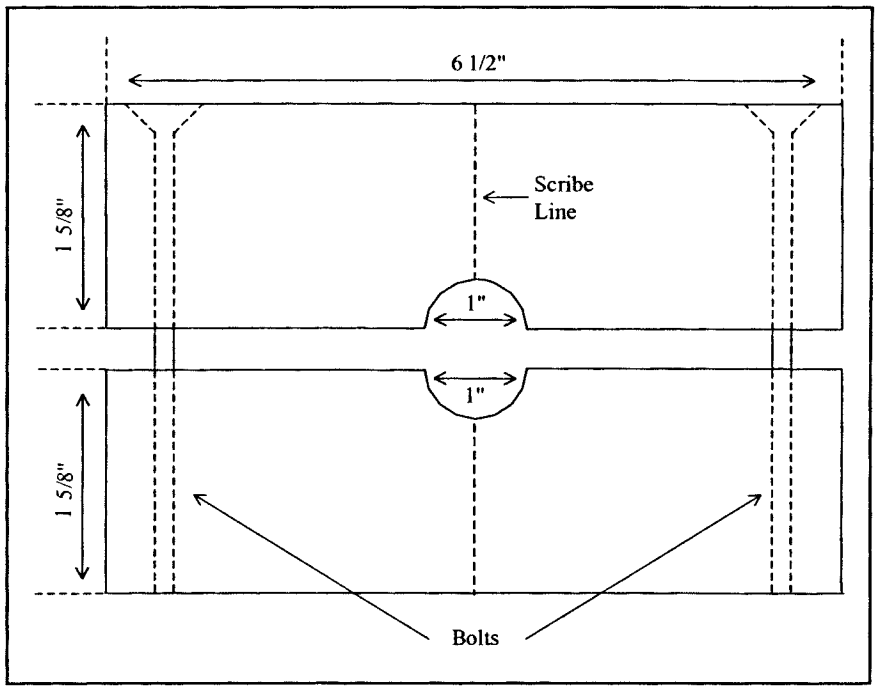

Figure 2F-6. Rotational position collar block.

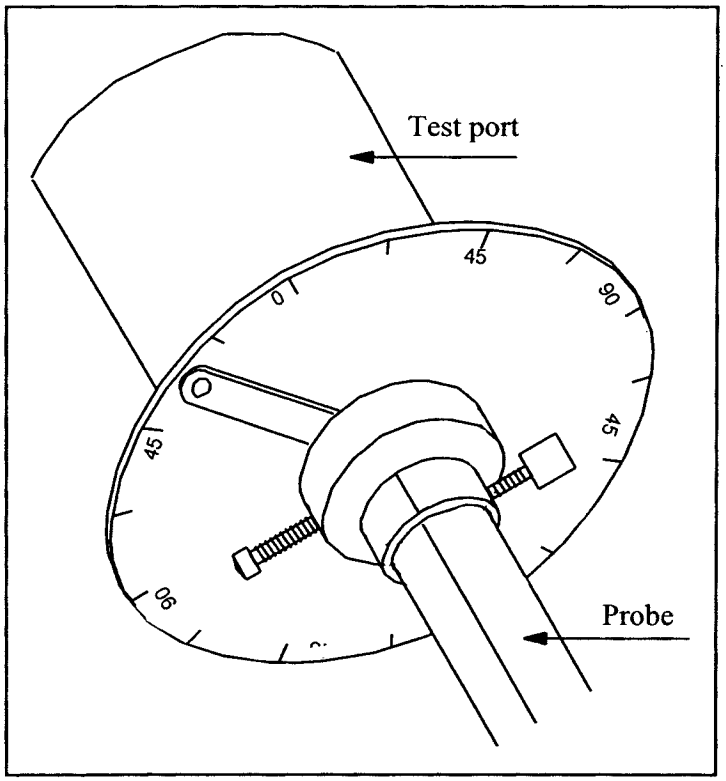

Figure 2F-7. Yaw angle protractor wheel and pointer.

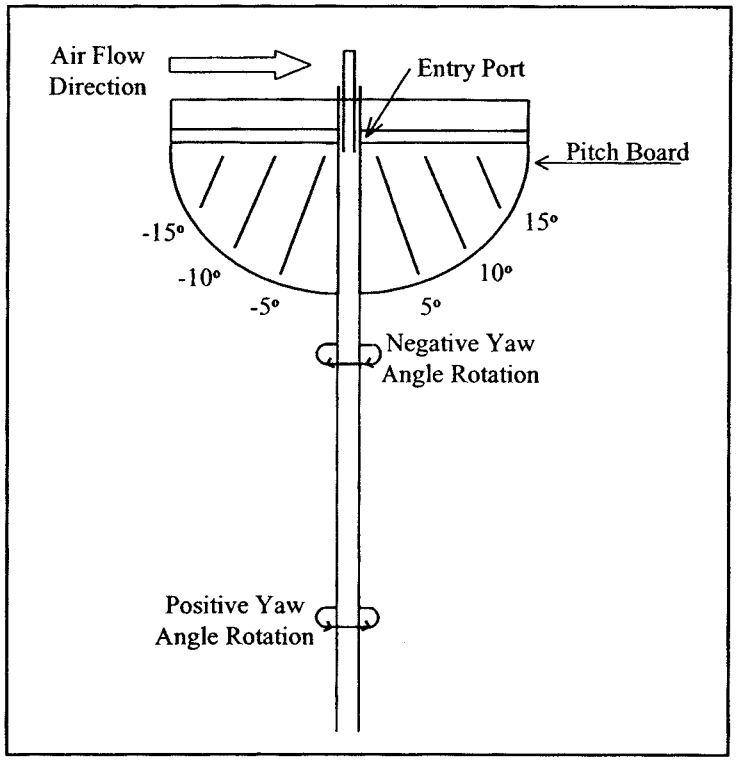

Figure 2F-8. Pitch angle protractor plate.

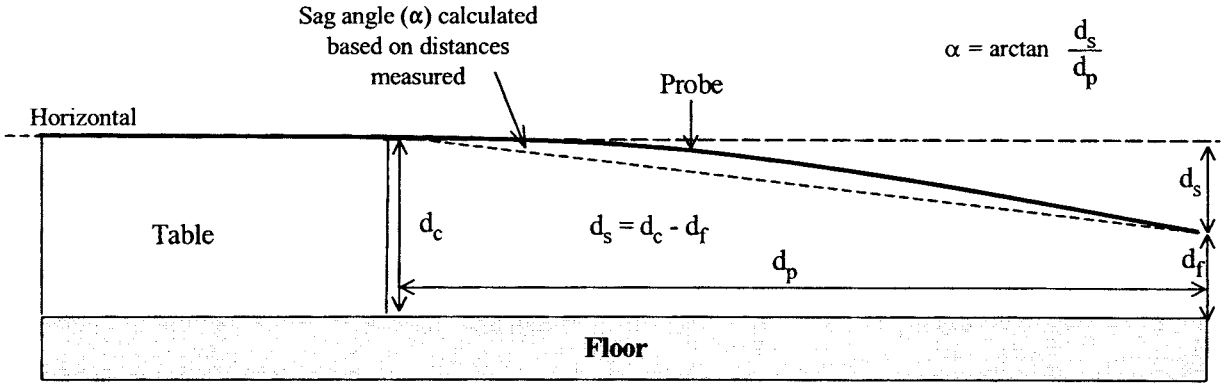

Figure 2F-9. Elements in horizontal straightness test using trigonometry.

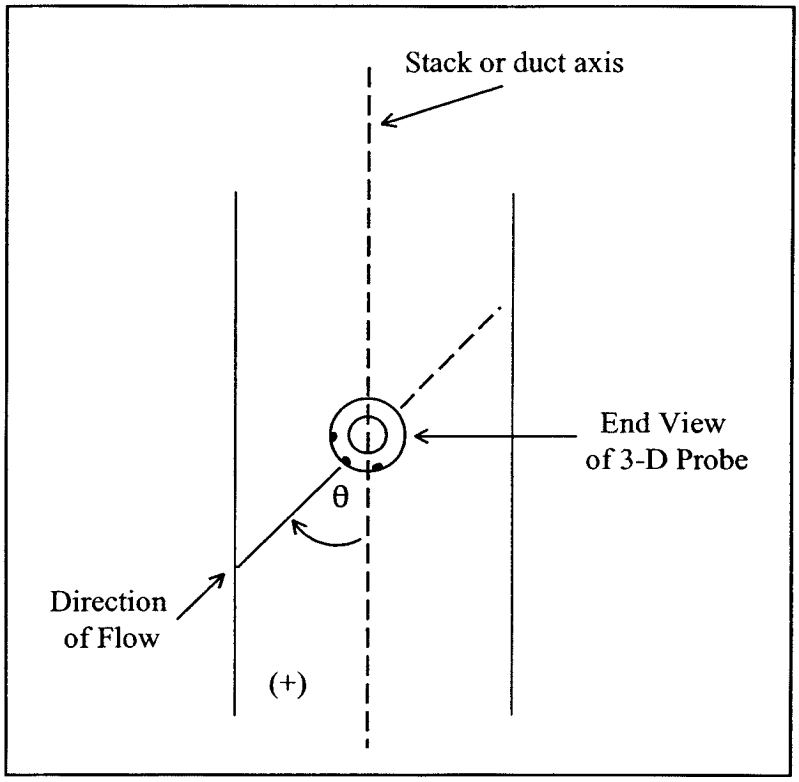

Figure 2F-10. Sign convention for the measured angle (θ) when the probe impact port is pointed directly into the flow. The angle θ is positive when the probe's impact pressure port is oriented in a clockwise rotational position relative to the stack or duct axis, as shown above and negative for a counterclockwise orientation.

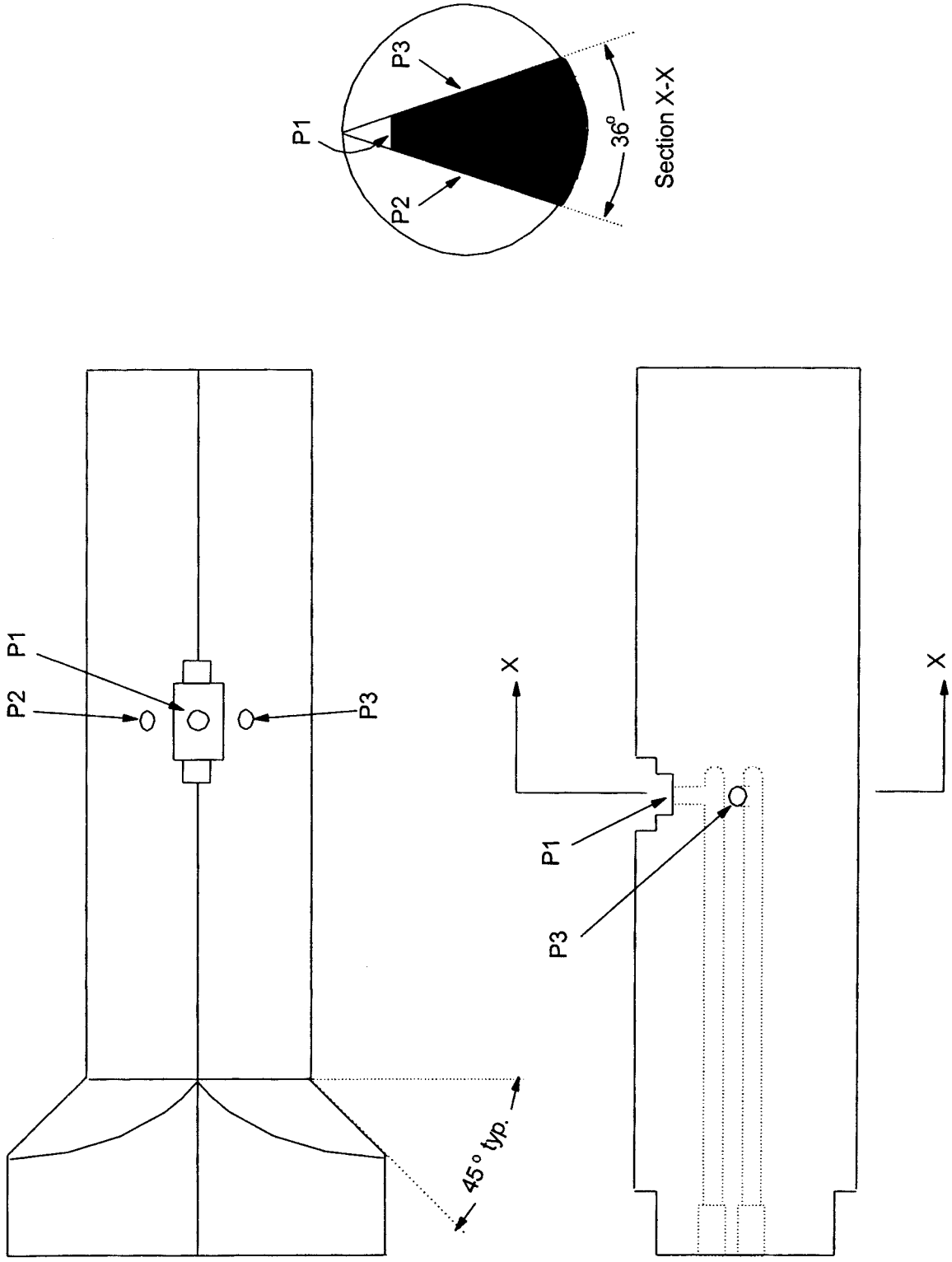

Figure 2F-11. Wedge probe used for axial flow verification.

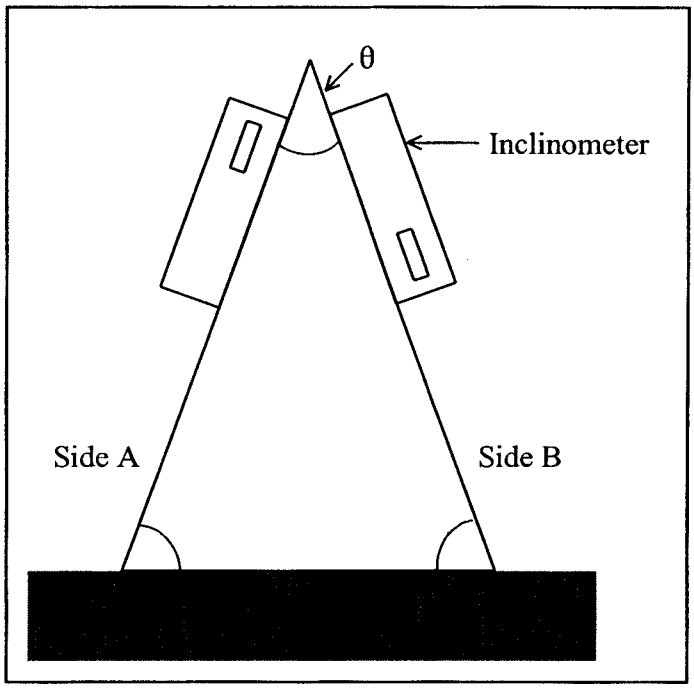

Figure 2F-12. Triangular block used for digital inclinometer calibration.

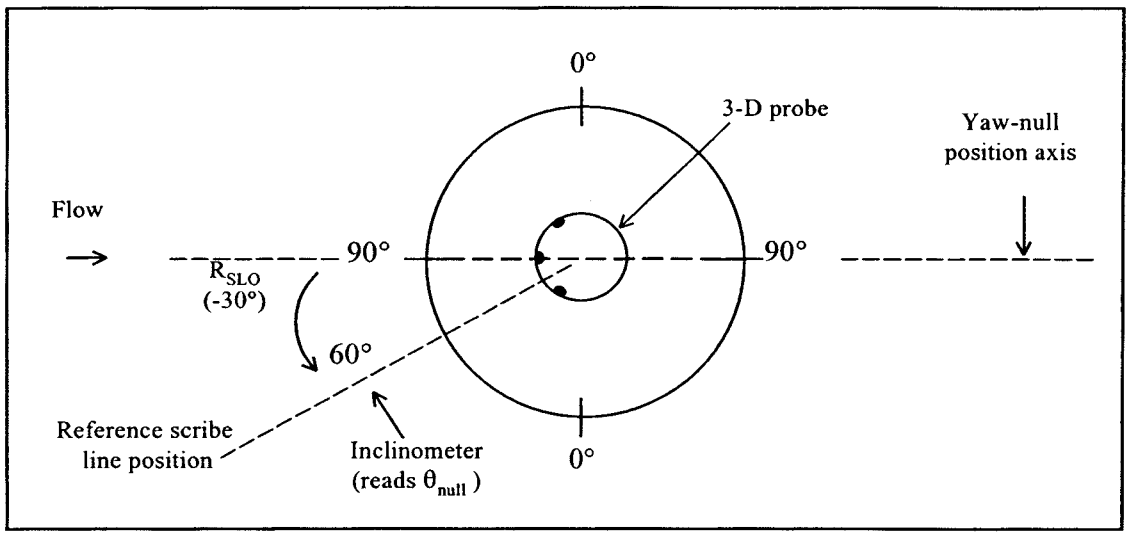

Figure 2F-13. Determination of reference scribe line rotational offset (R_{SLO}) in a horizontal wind tunnel with axial flow for a 3-D probe. The probe impact pressure port is aligned with the yaw-null position and is pointed into the flow. The inclinometer reads θ_{null}. The magnitude of R_{SLO}=90°-θ_{null} and the sign is a negative (counterclockwise from yaw-null position axis).

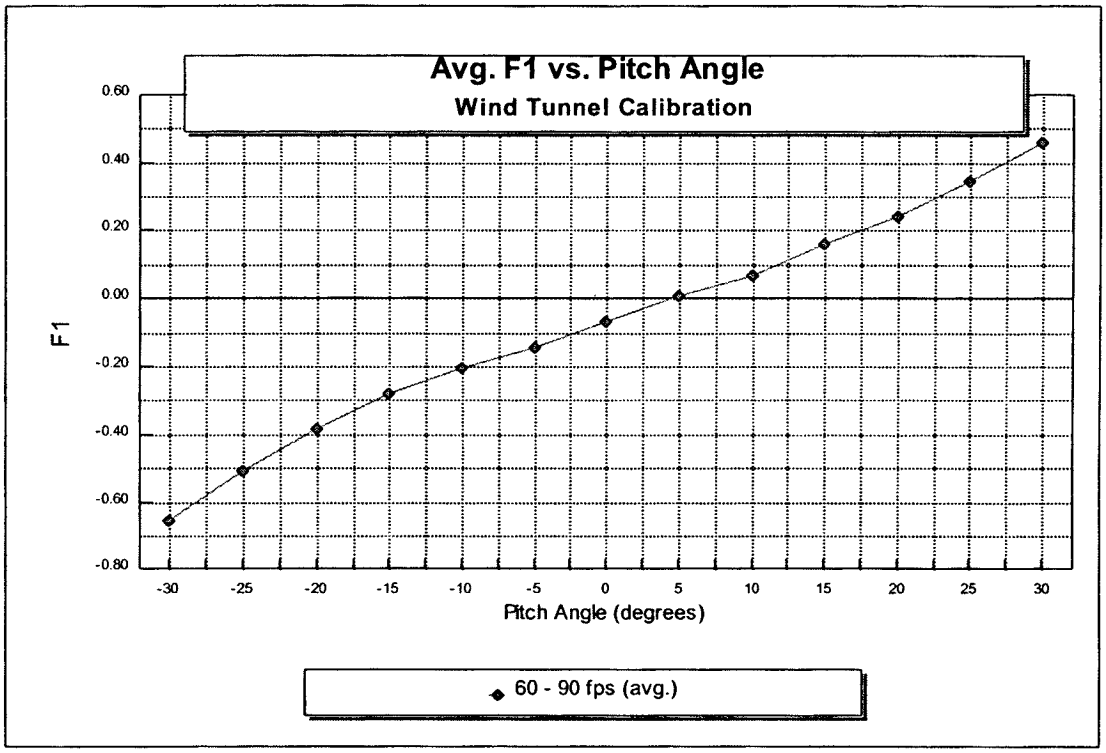

Figure 2F-14. Example F_1 calibration curve for the DAT probe.

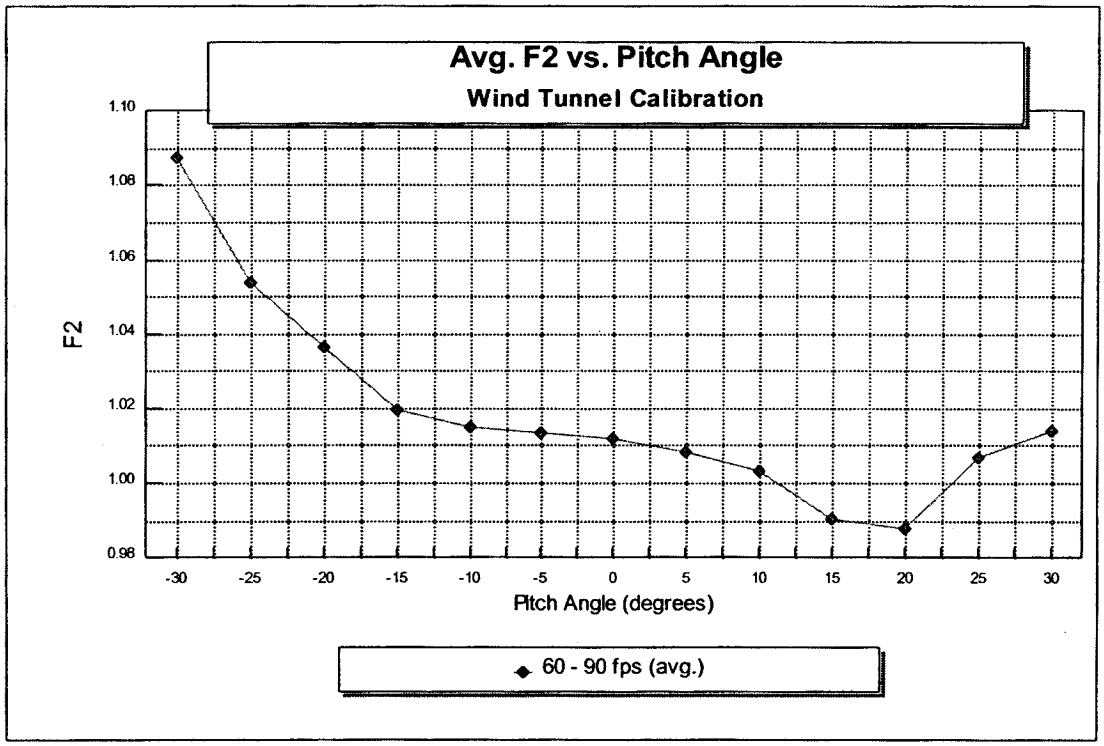

Figure 2F-15. Example F_2 calibration curve for the DAT probe.

Table 2F-1. 3-D Probe Inspection Sheet

Probe Type and ID # _____ **Date of most recent calibration:** _____

Fill in the tables below. For any item assigned a value of "1", show its location in the accompanying probe diagrams.

Inspection of Probe Ports

Port ID	Current Inspection (1=present, 0=absent)			Compared to Previous Calibration (1=changed, 0=unchanged)			Brief Description of Any Item with a Value of "1" in Preceding Columns
	Dents	Scratches	Asymmetries	Dents	Scratches	Asymmetries	
P1							
P2							
P3							
P4							
P5							

Inspection of Probe Surfaces

Surface ID	Current Inspection (1=present, 0=absent)		Compared to Previous Calibration (1=changed, 0=unchanged)		Brief Description of Any Item with a Value of "1" in Preceding Columns
	Scratches	Indentations	Scratches	Indentations	
S1					
S2					
S3					
S4					
S5					

Surface IDs S1 through S5 refer to the surfaces adjacent to pressure ports with the corresponding numbers, e.g., S3 refers to the surface adjacent to pressure port P3.

QA/QC Check

Completeness ___ Legibility ___ Accuracy ___ Specifications ___ Reasonableness ___

Certification

I certify that the Probe ID _____ meets or exceeds all specifications, criteria, and/or applicable design features required under Method 2F.

Certified by: _____ Date: _____

Table 2F-1. 3-D Probe Inspection Sheet (continued)

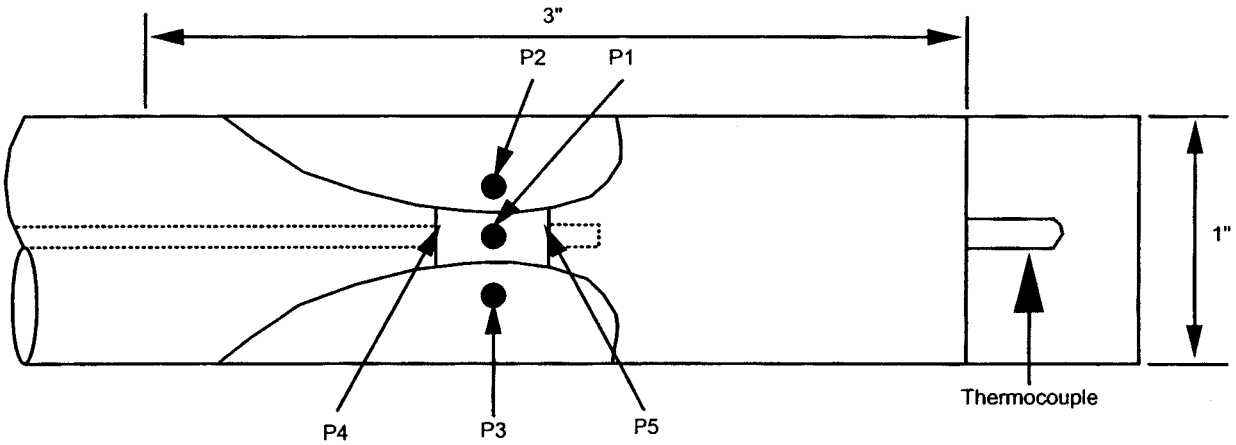

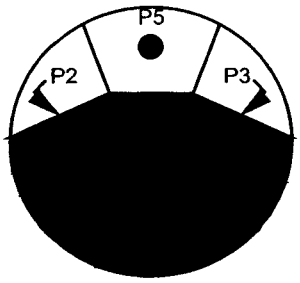

Section X-X

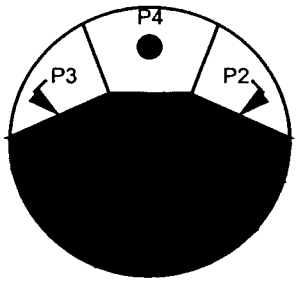

Section X-X

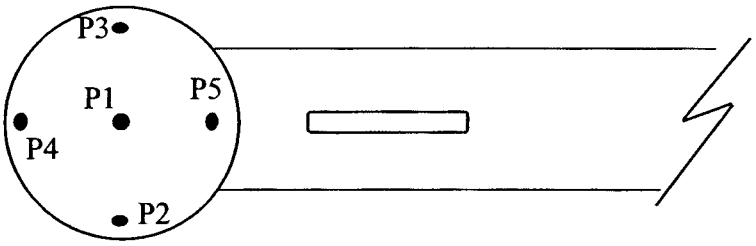

Table 2F-2. Rotational Position Check

Source: _____ Date: _____

Test Location: _____ Tester(s): _____

Probe Type: _____ Affiliation: _____

Probe ID: _____ Fully-Assembled Probe Length (in.): _____

Position	Angle Comparisons		
Distance of 2nd measurement device from probe head impact port in mm (in.)	**1st Device** Angle measured by device aligned on the reference scribe line, including algebraic sign (degrees)	**2nd Device** Angle measured by device mounted at each position to be used during testing, including algebraic sign (degrees)	R_{ADO} Difference between readings by 1st and 2nd angle-measuring devices (degrees)[a]
(Col. A)	(Col. B)	(Col. C)	(Col. C - Col. B)

[a] The algebraic sign must be consistent with section 8.3.2.

Specifications: For the pre-test rotational position check, the value of R_{ADO} at each location along the probe shaft must be determined to within ±1°. In the post-test check, R_{ADO} at each location must remain within ±2° of the value obtained in the pre-test check.

Table 2F-3. Example EPA Method 2F Field Data Form

Source: _____ Date: _____

Source Location: _____ Test Personnel: _____

Measurement Location: _____ Probe Type / ID: _____

Run ID:	
Start Time:	
End Time:	
Pressure Gauge ID:	
Pressure Gauge Readability:	in. H_2O
Temperature Gauge ID:	
Measurement Response Time:	sec.
R_{SLO}	
R_{ADO}	

Stack Diameter:	
Stack Area:	
Barometric Pressure (P_{bar}):	in. Hg
Static Pressure (P_g):	in. H_2O

	Pre-Test	Post-Test
Probe Head Condition: Damage Noted?		
Leak Check Performed?		

Clock Time	Traverse Point	Yaw Angle, including algebraic sign (degrees)	Velocity Differential Pressure (P_1-P_2)	Pitch Differential Pressure (P_4-P_5)	Stack or Duct Gas Temperature (°F)

Table 2F-4. Wind Tunnel Velocity Pressure Cross-Check

Wind Tunnel Facility: _____
Date: _____
Wind Tunnel Temperature: _____
Barometric Pressure: _____
Test Point Locations: _____
Lowest Test Velocity in m/sec (ft/sec): _____
Highest Test Velocity in m/sec (ft/sec): _____

Port		Rep.	Velocity Pressure (ΔP_{std})	
			@ Lowest Test Velocity	@ Highest Test Velocity
Calibration Pitot Tube Location		1		
		2		
		3		
		Average		
Calibration Location Test Points *	1	1		
		2		
		3		
		Average		
		% Difference **		
	2	1		
		2		
		3		
		Average		
		% Difference **		
		1		
		2		
		3		
		Average		
		% Difference **		

* Measurements must be taken at all points in the calibration location as specified in section 10.1.1

$$** \text{ Percent Difference} = \frac{(\textit{Calibration Location Test Point Avg} - \textit{Cal. Pitot Tube Location Avg})}{\textit{Cal. Pitot Tube Location Avg}} \times 100\%$$

Specification: At each velocity setting, the average velocity pressure obtained at the calibration location shall be within ±2 percent or 0.01 in. H_2O, whichever is less restrictive, of the average velocity pressure obtained at the fixed calibration pitot tube location.

Table 2F-5. Wind Tunnel Axial Flow Verification

Wind Tunnel Facility: _____
Date: _____
Wind Tunnel Temperature: _____
Barometric Pressure: _____
Probe Type/I.D. Used To Conduct Check: _____
Test Point Locations: _____
Lowest Test Velocity in m/sec (ft/sec): _____
Highest Test Velocity in m/sec (ft/sec): _____

Port		@ Lowest Test Velocity		@ Highest Test Velocity	
		Yaw Angle * (degrees)	Pitch Angle * (degrees)	Yaw Angle * (degrees)	Pitch Angle * (degrees)
Calibration Location Test Points **	1				
	2				
	3				
	..				
Calibration Pitot Tube Location					

* When following the procedures in section 10.1.2.1, both the yaw and pitch angles are obtained from the same port. When following the procedures in section 10.1.2.2, the yaw angle is obtained using the port for the tested probe, and the pitch angle is obtained using the port for verification of axial flow.

** Yaw and pitch angle measurements must be taken at all points that define the calibration location (as per the requirements in section 10.1.1)

Specification: At each velocity setting, each measured yaw and pitch angle shall be within ±3° of 0° in accordance with the requirements in section 10.1.2.

Table 2F-6. Yaw Angle Calibration

Probe Type:_____ Tester(s):_____

Probe ID:_____ Affiliation:_____

Test Location:_____ Date:_____

	Repetition 1		Repetition 2	
Nominal Velocity Setting in m/sec (ft/sec)	**θ_{null} (degrees)**	**R_{SLO} (degrees)***	**θ_{null} (degrees)**	**R_{SLO} (degrees)***
_____	_____	_____	_____	_____
_____	_____	_____	_____	_____
_____	_____	_____	_____	_____
_____	_____	_____	_____	_____
_____	_____	_____	_____	_____
_____	_____	_____	_____	_____
_____	_____	_____	_____	_____
_____	_____	_____	_____	_____
_____	_____	_____	_____	_____

Average of all recorded R_{SLO} values: _____

* Include magnitude and algebraic sign in accordance with section 10.5.7.

Table 2F-7. Determining the Magnitude of Reference Scribe Line Offset

Probe/Angle-Measuring Device	Magnitude of R_{SLO}
3-D probe with inclinometer	$90° - \theta_{null}$
3-D probe with protractor wheel and pointer	θ_{null}

Table 2F-8. Wind Tunnel Calibration of Three-Dimensional Probe

Wind Tunnel Facility: _____

Wind Tunnel Location: _____

Probe Type: _____

Probe ID: _____

Probe Calibration Date: _____

Test Location: _____

Calibration Pitot Tube Coeff. (C_p): _____

Ambient Temperature (° F): _____

Barometric Pressure (P_{bar}): _____

Velocity Setting (ft/sec)	Pitch Angle	Calibration Pitot Tube		Tested Probe			Calc. F_1	Calc. F_2
		ΔP_{std} (in. H_2O)*	Temp. (°F)	P_1-P_2 (in. H_2O)	P_4-P_5 (in. H_2O)	Yaw Angle (degrees)		
	-30°							
	-25°							
	-20°							
	-15°							
	-10°							
	-5°							
	0°							
	5°							
	10°							
	15°							
	20°							
	25°							
	30°							

* Calibration pitot tube measurements must, at a minimum, be taken before the tested probe reading at the first pitch angle setting, and after the tested probe reading at the last pitch angle setting in each replicate. See section 10.6.11.

Table 2F-9. Calibration Log for Three-Dimensional Probe

Probe ID: _____

Probe Type: _____

Probe Calibration Date: _____

Test Location: _____

Nominal Velocity: _____

Pitch Angle	Average of All Repetitions		Number of Repetitions
	F_1	F_2	
-35°			
-30°			
-25°			
-20°			
-15°			
-10°			
-5°			
0°			
5°			
10°			
15°			
20°			
25°			
30°			
35°			

BILLING CODE 6560–50–C

Method 2G—Determination of Stack Gas Velocity and Volumetric Flow Rate With Two-Dimensional Probes

Note: This method does not include all of the specifications (e.g., equipment and supplies) and procedures (e.g., sampling) essential to its performance. Some material has been incorporated from other methods in this part. Therefore, to obtain reliable results, those using this method should have a thorough knowledge of at least the following additional test methods: Methods 1, 2, 3 or 3A, and 4.

1.0 Scope and Application

1.1 This method is applicable for the determination of yaw angle, near-axial velocity, and the volumetric flow rate of a gas stream in a stack or duct using a two-dimensional (2–D) probe.

2.0 Summary of Method

2.1 A 2–D probe is used to measure the velocity pressure and the yaw angle of the flow velocity vector in a stack or duct. Alternatively, these measurements may be made by operating one of the three-dimensional (3–D) probes described in Method 2F, in yaw determination mode only. From these measurements and a determination of the stack gas density, the average near-axial velocity of the stack gas is calculated. The near-axial velocity accounts for the yaw, but not the pitch, component of flow. The average gas volumetric flow rate in the stack or duct is then determined from the average near-axial velocity.

3.0 Definitions

3.1. *Angle-measuring Device Rotational Offset (R_{ADO}).* The rotational position of an angle-measuring device relative to the reference scribe line, as determined during the pre-test rotational position check described in section 8.3.

3.2 *Calibration Pitot Tube.* The standard (Prandtl type) pitot tube used as a reference when calibrating a probe under this method.

3.3 *Field Test.* A set of measurements conducted at a specific unit or exhaust stack/duct to satisfy the applicable regulation (e.g., a three-run boiler performance test, a single- or multiple-load nine-run relative accuracy test).

3.4 *Full Scale of Pressure-measuring Device.* Full scale refers to the upper limit of the measurement range displayed by the device. For bi-directional pressure gauges, full scale includes the entire pressure range from the lowest negative value to the highest positive value on the pressure scale.

3.5 *Main probe.* Refers to the probe head and that section of probe sheath directly attached to the probe head. The main probe sheath is distinguished from probe extensions, which are sections of sheath added onto the main probe to extend its reach.

3.6 *''May,'' ''Must,'' ''Shall,'' ''Should,''* and the imperative form of verbs.

3.6.1 *''May''* is used to indicate that a provision of this method is optional.

3.6.2 *''Must,'' ''Shall,''* and the imperative form of verbs (such as ''record'' or ''enter'') are used to indicate that a provision of this method is mandatory.

3.6.3 *''Should''* is used to indicate that a provision of this method is not mandatory, but is highly recommended as good practice.

3.7 *Method 1.* Refers to 40 CFR part 60, appendix A, ''Method 1—Sample and velocity traverses for stationary sources.''

3.8 *Method 2.* Refers to 40 CFR part 60, appendix A, ''Method 2—Determination of stack gas velocity and volumetric flow rate (Type S pitot tube).''

3.9 *Method 2F.* Refers to 40 CFR part 60, appendix A, ''Method 2F—Determination of stack gas velocity and volumetric flow rate with three-dimensional probes.''

3.10 *Near-axial Velocity.* The velocity vector parallel to the axis of the stack or duct that accounts for the yaw angle component of gas flow. The term ''near-axial'' is used herein to indicate that the velocity and volumetric flow rate results account for the measured yaw angle component of flow at each measurement point.

3.11 *Nominal Velocity.* Refers to a wind tunnel velocity setting that approximates the actual wind tunnel velocity to within ±1.5 m/sec (±5 ft/sec).

3.12 *Pitch Angle.* The angle between the axis of the stack or duct and the pitch component of flow, i.e., the component of the total velocity vector in a plane defined by the traverse line and the axis of the stack or duct. (Figure 2G–1 illustrates the ''pitch plane.'') From the standpoint of a tester facing a test port in a vertical stack, the pitch component of flow is the vector of flow moving from the center of the stack toward or away from that test port. The pitch angle is the angle described by this pitch component of flow and the vertical axis of the stack.

3.13 *Readability.* For the purposes of this method, readability for an analog measurement device is one half of the smallest scale division. For a digital measurement device, it is the number of decimals displayed by the device.

3.14 *Reference Scribe Line.* A line permanently inscribed on the main probe sheath (in accordance with section 6.1.5.1) to serve as a reference mark for determining yaw angles.

3.15 *Reference Scribe Line Rotational Offset (R_{SLO}).* The rotational position of a probe's reference scribe line relative to the probe's yaw-null position, as determined during the yaw angle calibration described in section 10.5.

3.16 *Response Time.* The time required for the measurement system to fully respond to a change from zero differential pressure and ambient temperature to the stable stack or duct pressure and temperature readings at a traverse point.

3.17 *Tested Probe.* A probe that is being calibrated.

3.18 *Three-dimensional (3–D) Probe.* A directional probe used to determine the velocity pressure and the yaw and pitch angles in a flowing gas stream.

3.19 *Two-dimensional (2–D) Probe.* A directional probe used to measure velocity pressure and yaw angle in a flowing gas stream.

3.20 *Traverse Line.* A diameter or axis extending across a stack or duct on which measurements of velocity pressure and flow angles are made.

3.21 *Wind Tunnel Calibration Location.* A point, line, area, or volume within the wind tunnel test section at, along, or within which probes are calibrated. At a particular wind tunnel velocity setting, the average velocity pressures at specified points at, along, or within the calibration location shall vary by no more than 2 percent or 0.3 mm H_20 (0.01 in. H_2O), whichever is less restrictive, from the average velocity pressure at the calibration pitot tube location. Air flow at this location shall be axial, i.e., yaw and pitch angles within ±3 of 0. Compliance with these flow criteria shall be demonstrated by performing the procedures prescribed in sections 10.1.1 and 10.1.2. For circular tunnels, no part of the calibration location may be closer to the tunnel wall than 10.2 cm (4 in.) or 25 percent of the tunnel diameter, whichever is farther from the wall. For elliptical or rectangular tunnels, no part of the calibration location may be closer to the tunnel wall than 10.2 cm (4 in.) or 25 percent of the applicable cross-sectional axis, whichever is farther from the wall.

3.22 *Wind Tunnel with Documented Axial Flow.* A wind tunnel facility documented as meeting the provisions of sections 10.1.1 (velocity pressure cross-check) and 10.1.2 (axial flow verification) using the procedures described in these sections or alternative procedures determined to be technically equivalent.

3.23 *Yaw Angle.* The angle between the axis of the stack or duct and the yaw component of flow, i.e., the component of the total velocity vector in a plane perpendicular to the traverse line at a particular traverse point. (Figure 2G–1 illustrates the ''yaw plane.'') From the standpoint of a tester facing a test port in a vertical stack, the yaw component of flow is the vector of flow moving to the left or right from the center of the stack as viewed by the tester. (This is sometimes referred to as ''vortex flow,'' i.e., flow around the centerline of a stack or duct.) The yaw angle is the angle described by this yaw component of flow and the vertical axis of the stack. The algebraic sign convention is illustrated in Figure 2G–2.

3.24 *Yaw Nulling.* A procedure in which a Type-S pitot tube or a 3–D probe is rotated about its axis in a stack or duct until a zero differential pressure reading (''yaw null'') is obtained. When a Type S probe is yaw-nulled, the rotational position of its impact port is 90° from the direction of flow in the stack or duct and the Δ P reading is zero. When a 3–D probe is yaw-nulled, its impact pressure port (P_1) faces directly into the direction of flow in the stack or duct and the differential pressure between pressure ports P_2 and P_3 is zero.

4.0 Interferences. [Reserved]

5.0 Safety

5.1 This test method may involve hazardous operations and the use of hazardous materials or equipment. This method does not purport to address all of the safety problems associated with its use. It is the responsibility of the user to establish and implement appropriate safety and health practices and to determine the applicability of regulatory limitations before using this test method.

6.0 Equipment and Supplies

6.1 Two-dimensional Probes. Probes that provide both the velocity pressure and the yaw angle of the flow vector in a stack or duct, as listed in sections 6.1.1 and 6.1.2, qualify for use based on comprehensive wind tunnel and field studies involving both inter- and intra-probe comparisons by multiple test teams. Each 2–D probe shall have a unique identification number or code permanently marked on the main probe sheath. Each probe shall be calibrated prior to use according to the procedures in section 10. Manufacturer-supplied calibration data shall be used as example information only, except when the manufacturer calibrates the probe as specified in section 10 and provides complete documentation.

6.1.1 Type S (Stausscheibe or reverse type) pitot tube. This is the same as specified in Method 2, section 2.1, except for the following additional specifications that enable the pitot tube to accurately determine the yaw component of flow. For the purposes of this method, the external diameter of the tubing used to construct the Type S pitot tube (dimension D_t in Figure 2–2 of Method 2) shall be no less than 9.5 mm (3/8 in.). The pitot tube shall also meet the following alignment specifications. The angles α_1, α_2, β_1, and β_2, as shown in Method 2, Figure 2–3, shall not exceed ±2°. The dimensions *w* and *z*, shown in Method 2, Figure 2–3 shall not exceed 0.5 mm (0.02 in.).

6.1.1.1 Manual Type S probe. This refers to a Type S probe that is positioned at individual traverse points and yaw nulled manually by an operator.

6.1.1.2 Automated Type S probe. This refers to a system that uses a computer-controlled motorized mechanism to position the Type S pitot head at individual traverse points and perform yaw angle determinations.

6.1.2 Three-dimensional probes used in 2–D mode. A 3–D probe, as specified in sections 6.1.1 through 6.1.3 of Method 2F, may, for the purposes of this method, be used in a two-dimensional mode (i.e., measuring yaw angle, but not pitch angle). When the 3–D probe is used as a 2–D probe, only the velocity pressure and yaw-null pressure are obtained using the pressure taps referred to as P_1, P_2, and P_3. The differential pressure P_1–P_2 is a function of total velocity and corresponds to the Δ P obtained using the Type S probe. The differential pressure P_2–P_3 is used to yaw null the probe and determine the yaw angle. The differential pressure P_4–P_5, which is a function of pitch angle, is not measured when the 3–D probe is used in 2–D mode.

6.1.3 Other probes. [Reserved]

6.1.4 Probe sheath. The probe shaft shall include an outer sheath to: (1) provide a surface for inscribing a permanent reference scribe line, (2) accommodate attachment of an angle-measuring device to the probe shaft, and (3) facilitate precise rotational movement of the probe for determining yaw angles. The sheath shall be rigidly attached to the probe assembly and shall enclose all pressure lines from the probe head to the farthest position away from the probe head where an angle-measuring device may be attached during use in the field. The sheath of the fully assembled probe shall be sufficiently rigid and straight at all rotational positions such that, when one end of the probe shaft is held in a horizontal position, the fully extended probe meets the horizontal straightness specifications indicated in section 8.2 below.

6.1.5 Scribe lines.

6.1.5.1 Reference scribe line. A permanent line, no greater than 1.6 mm (1/16 in.) in width, shall be inscribed on each manual probe that will be used to determine yaw angles of flow. This line shall be placed on the main probe sheath in accordance with the procedures described in section 10.4 and is used as a reference position for installation of the yaw angle-measuring device on the probe. At the discretion of the tester, the scribe line may be a single line segment placed at a particular position on the probe sheath (e.g., near the probe head), multiple line segments placed at various locations along the length of the probe sheath (e.g., at every position where a yaw angle-measuring device may be mounted), or a single continuous line extending along the full length of the probe sheath.

6.1.5.2 Scribe line on probe extensions. A permanent line may also be inscribed on any probe extension that will be attached to the main probe in performing field testing. This allows a yaw angle-measuring device mounted on the extension to be readily aligned with the reference scribe line on the main probe sheath.

6.1.5.3 Alignment specifications. This specification shall be met separately, using the procedures in section 10.4.1, on the main probe and on each probe extension. The rotational position of the scribe line or scribe line segments on the main probe or any probe extension must not vary by more than 2°. That is, the difference between the minimum and maximum of all of the rotational angles that are measured along the full length of the main probe or the probe extension must not exceed 2°.

6.1.6 Probe and system characteristics to ensure horizontal stability.

6.1.6.1 For manual probes, it is recommended that the effective length of the probe (coupled with a probe extension, if necessary) be at least 0.9 m (3 ft.) longer than the farthest traverse point mark on the probe shaft away from the probe head. The operator should maintain the probe's horizontal stability when it is fully inserted into the stack or duct. If a shorter probe is used, the probe should be inserted through a bushing sleeve, similar to the one shown in Figure 2G–3, that is installed on the test port; such a bushing shall fit snugly around the probe and be secured to the stack or duct entry port in such a manner as to maintain the probe's horizontal stability when fully inserted into the stack or duct.

6.1.6.2 An automated system that includes an external probe casing with a transport system shall have a mechanism for maintaining horizontal stability comparable to that obtained by manual probes following the provisions of this method. The automated probe assembly shall also be constructed to maintain the alignment and position of the pressure ports during sampling at each traverse point. The design of the probe casing and transport system shall allow the probe to be removed from the stack or duct and checked through direct physical measurement for angular position and insertion depth.

6.1.7 The tubing that is used to connect the probe and the pressure-measuring device should have an inside diameter of at least 3.2 mm (⅛ in.), to reduce the time required for pressure equilibration, and should be as short as practicable.

6.1.8 If a detachable probe head without a sheath [e.g., a pitot tube, typically 15.2 to 30.5 cm (6 to 12 in.) in length] is coupled with a probe sheath and calibrated in a wind tunnel in accordance with the yaw angle calibration procedure in section 10.5, the probe head shall remain attached to the probe sheath during field testing in the same configuration and orientation as calibrated. Once the detachable probe head is uncoupled or re-oriented, the yaw angle calibration of the probe is no longer valid and must be repeated before using the probe in subsequent field tests.

6.2 Yaw Angle-measuring Device. One of the following devices shall be used for measurement of the yaw angle of flow.

6.2.1 Digital inclinometer. This refers to a digital device capable of measuring and displaying the rotational position of the probe to within ±1°. The device shall be able to be locked into position on the probe sheath or probe extension, so that it indicates the probe's rotational position throughout the test. A rotational position collar block that can be attached to the probe sheath (similar to the collar shown in Figure 2G–4) may be required to lock the digital inclinometer into position on the probe sheath.

6.2.2 Protractor wheel and pointer assembly. This apparatus, similar to that shown in Figure 2G–5, consists of the following components.

6.2.2.1 A protractor wheel that can be attached to a port opening and set in a fixed rotational position to indicate the yaw angle position of the probe's scribe line relative to the longitudinal axis of the stack or duct. The protractor wheel must have a measurement ring on its face that is no less than 17.8 cm (7 in.) in diameter, shall be able to be rotated to any angle and then locked into position on the stack or duct test port, and shall indicate angles to a resolution of 1°.

6.2.2.2 A pointer assembly that includes an indicator needle mounted on a collar that can slide over the probe sheath and be locked into a fixed rotational position on the probe sheath. The pointer needle shall be of sufficient length, rigidity, and sharpness to allow the tester to determine the probe's angular position to within 1° from the markings on the protractor wheel. Corresponding to the position of the pointer, the collar must have a scribe line to be used in aligning the pointer with the scribe line on the probe sheath.

6.2.3 Other yaw angle-measuring devices. Other angle-measuring devices with a manufacturer's specified precision of 1° or better may be used, if approved by the Administrator.

6.3 Probe Supports and Stabilization Devices. When probes are used for determining flow angles, the probe head should be kept in a stable horizontal

position. For probes longer than 3.0 m (10 ft.), the section of the probe that extends outside the test port shall be secured. Three alternative devices are suggested for maintaining the horizontal position and stability of the probe shaft during flow angle determinations and velocity pressure measurements: (1) monorails installed above each port, (2) probe stands on which the probe shaft may be rested, or (3) bushing sleeves of sufficient length secured to the test ports to maintain probes in a horizontal position. Comparable provisions shall be made to ensure that automated systems maintain the horizontal position of the probe in the stack or duct. The physical characteristics of each test platform may dictate the most suitable type of stabilization device. Thus, the choice of a specific stabilization device is left to the judgement of the testers.

6.4 Differential Pressure Gauges. The velocity pressure (Δ P) measuring devices used during wind tunnel calibrations and field testing shall be either electronic manometers (e.g., pressure transducers), fluid manometers, or mechanical pressure gauges (e.g., Magnehelic® gauges). Use of electronic manometers is recommended. Under low velocity conditions, use of electronic manometers may be necessary to obtain acceptable measurements.

6.4.1 Differential pressure-measuring device. This refers to a device capable of measuring pressure differentials and having a readability of ±1 percent of full scale. The device shall be capable of accurately measuring the maximum expected pressure differential. Such devices are used to determine the following pressure measurements: velocity pressure, static pressure, and yaw-null pressure. For an inclined-vertical manometer, the readability specification of ±1 percent shall be met separately using the respective full-scale upper limits of the inclined and vertical portions of the scales. To the extent practicable, the device shall be selected such that most of the pressure readings are between 10 and 90 percent of the device's full-scale measurement range (as defined in section 3.4). In addition, pressure-measuring devices should be selected such that the zero does not drift by more than 5 percent of the average expected pressure readings to be encountered during the field test. This is particularly important under low pressure conditions.

6.4.2 Gauge used for yaw nulling. The differential pressure-measuring device chosen for yaw nulling the probe during the wind tunnel calibrations and field testing shall be bi-directional, i.e., capable of reading both positive and negative differential pressures. If a mechanical, bi-directional pressure gauge is chosen, it shall have a full-scale range no greater than 2.6 cm (i.e., −1.3 to +1.3 cm) [1 in. H_2O (i.e., −0.5 in. to +0.5 in.)].

6.4.3 Devices for calibrating differential pressure-measuring devices. A precision manometer (e.g., a U-tube, inclined, or inclined-vertical manometer, or micromanometer) or NIST (National Institute of Standards and Technology) traceable pressure source shall be used for calibrating differential pressure-measuring devices. The device shall be maintained under laboratory conditions or in a similar protected environment (e.g., a climate-controlled trailer). It shall not be used in field tests. The precision manometer shall have a scale gradation of 0.3 mm H_2O (0.01 in. H_2O), or less, in the range of 0 to 5.1 cm H_2O (0 to 2 in. H_2O) and 2.5 mm H_2O (0.1 in. H_2O), or less, in the range of 5.1 to 25.4 cm H_2O (2 to 10 in. H_2O). The manometer shall have manufacturer's documentation that it meets an accuracy specification of at least 0.5 percent of full scale. The NIST-traceable pressure source shall be recertified annually.

6.4.4 Devices used for post-test calibration check. A precision manometer meeting the specifications in section 6.4.3, a pressure-measuring device or pressure source with a documented calibration traceable to NIST, or an equivalent device approved by the Administrator shall be used for the post-test calibration check. The pressure-measuring device shall have a readability equivalent to or greater than the tested device. The pressure source shall be capable of generating pressures between 50 and 90 percent of the range of the tested device and known to within ±1 percent of the full scale of the tested device. The pressure source shall be recertified annually.

6.5 Data Display and Capture Devices. Electronic manometers (if used) shall be coupled with a data display device (such as a digital panel meter, personal computer display, or strip chart) that allows the tester to observe and validate the pressure measurements taken during testing. They shall also be connected to a data recorder (such as a data logger or a personal computer with data capture software) that has the ability to compute and retain the appropriate average value at each traverse point, identified by collection time and traverse point.

6.6 Temperature Gauges. For field tests, a thermocouple or resistance temperature detector (RTD) capable of measuring temperature to within ±3°C (±5°F) of the stack or duct temperature shall be used. The thermocouple shall be attached to the probe such that the sensor tip does not touch any metal. The position of the thermocouple relative to the pressure port face openings shall be in the same configuration as used for the probe calibrations in the wind tunnel. Temperature gauges used for wind tunnel calibrations shall be capable of measuring temperature to within ±0.6°C (±1°F) of the temperature of the flowing gas stream in the wind tunnel.

6.7 Stack or Duct Static Pressure Measurement. The pressure-measuring device used with the probe shall be as specified in section 6.4 of this method. The static tap of a standard (Prandtl type) pitot tube or one leg of a Type S pitot tube with the face opening planes positioned parallel to the gas flow may be used for this measurement. Also acceptable is the pressure differential reading of P_1-P_{bar} from a five-hole prism-shaped 3–D probe, as specified in section 6.1.1 of Method 2F (such as the Type DA or DAT probe), with the P_1 pressure port face opening positioned parallel to the gas flow in the same manner as the Type S probe. However, the 3–D spherical probe, as specified in section 6.1.2 of Method 2F, is unable to provide this measurement and shall not be used to take static pressure measurements. Static pressure measurement is further described in section 8.11.

6.8 Barometer. Same as Method 2, section 2.5.

6.9 Gas Density Determination Equipment. Method 3 or 3A shall be used to determine the dry molecular weight of the stack or duct gas. Method 4 shall be used for moisture content determination and computation of stack or duct gas wet molecular weight. Other methods may be used, if approved by the Administrator.

6.10 Calibration Pitot Tube. Same as Method 2, section 2.7.

6.11 Wind Tunnel for Probe Calibration. Wind tunnels used to calibrate velocity probes must meet the following design specifications.

6.11.1 Test section cross-sectional area. The flowing gas stream shall be confined within a circular, rectangular, or elliptical duct. The cross-sectional area of the tunnel must be large enough to ensure fully developed flow in the presence of both the calibration pitot tube and the tested probe. The calibration site, or ''test section,'' of the wind tunnel shall have a minimum diameter of 30.5 cm (12 in.) for circular or elliptical duct cross-sections or a minimum width of 30.5 cm (12 in.) on the shorter side for rectangular cross-sections. Wind tunnels shall meet the probe blockage provisions of this section and the qualification requirements prescribed in section 10.1. The projected area of the portion of the probe head, shaft, and attached devices inside the wind tunnel during calibration shall represent no more than 4 percent of the cross-sectional area of the tunnel. The projected area shall include the combined area of the calibration pitot tube and the tested probe if both probes are placed simultaneously in the same cross-sectional plane in the wind tunnel, or the larger projected area of the two probes if they are placed alternately in the wind tunnel.

6.11.2 Velocity range and stability. The wind tunnel should be capable of maintaining velocities between 6.1 m/sec and 30.5 m/sec (20 ft/sec and 100 ft/sec). The wind tunnel shall produce fully developed flow patterns that are stable and parallel to the axis of the duct in the test section.

6.11.3 Flow profile at the calibration location. The wind tunnel shall provide axial flow within the test section calibration location (as defined in section 3.21). Yaw and pitch angles in the calibration location shall be within ±3° of 0°. The procedure for determining that this requirement has been met is described in section 10.1.2.

6.11.4 Entry ports in the wind tunnel test section.

6.11.4.1 Port for tested probe. A port shall be constructed for the tested probe. This port shall be located to allow the head of the tested probe to be positioned within the wind tunnel calibration location (as defined in section 3.21). The tested probe shall be able to be locked into the 0° pitch angle position. To facilitate alignment of the probe during calibration, the test section should include a

window constructed of a transparent material to allow the tested probe to be viewed.

6.11.4.2 Port for verification of axial flow. Depending on the equipment selected to conduct the axial flow verification prescribed in section 10.1.2, a second port, located 90° from the entry port for the tested probe, may be needed to allow verification that the gas flow is parallel to the central axis of the test section. This port should be located and constructed so as to allow one of the probes described in section 10.1.2.2 to access the same test point(s) that are accessible from the port described in section 6.11.4.1.

6.11.4.3 Port for calibration pitot tube. The calibration pitot tube shall be used in the port for the tested probe or in a separate entry port. In either case, all measurements with the calibration pitot tube shall be made at the same point within the wind tunnel over the course of a probe calibration. The measurement point for the calibration pitot tube shall meet the same specifications for distance from the wall and for axial flow as described in section 3.21 for the wind tunnel calibration location.

7.0 Reagents and Standards. [Reserved]

8.0 Sample Collection and Analysis

8.1 Equipment Inspection and Set Up

8.1.1 All 2–D and 3–D probes, differential pressure-measuring devices, yaw angle-measuring devices, thermocouples, and barometers shall have a current, valid calibration before being used in a field test. (See sections 10.3.3, 10.3.4, and 10.5 through 10.10 for the applicable calibration requirements.)

8.1.2 Before each field use of a Type S probe, perform a visual inspection to verify the physical condition of the pitot tube. Record the results of the inspection. If the face openings are noticeably misaligned or there is visible damage to the face openings, the probe shall not be used until repaired, the dimensional specifications verified (according to the procedures in section 10.2.1), and the probe recalibrated.

8.1.3 Before each field use of a 3–D probe, perform a visual inspection to verify the physical condition of the probe head according to the procedures in section 10.2 of Method 2F. Record the inspection results on a form similar to Table 2F–1 presented in Method 2F. If there is visible damage to the 3–D probe, the probe shall not be used until it is recalibrated.

8.1.4 After verifying that the physical condition of the probe head is acceptable, set up the apparatus using lengths of flexible tubing that are as short as practicable. Surge tanks installed between the probe and pressure-measuring device may be used to dampen pressure fluctuations provided that an adequate measurement system response time (see section 8.8) is maintained.

8.2 Horizontal Straightness Check. A horizontal straightness check shall be performed before the start of each field test, except as otherwise specified in this section. Secure the fully assembled probe (including the probe head and all probe shaft extensions) in a horizontal position using a stationary support at a point along the probe shaft approximating the location of the stack or duct entry port when the probe is sampling at the farthest traverse point from the stack or duct wall. The probe shall be rotated to detect bends. Use an angle-measuring device or trigonometry to determine the bend or sag between the probe head and the secured end. (See Figure 2G–6.) Probes that are bent or sag by more than 5° shall not be used. Although this check does not apply when the probe is used for a vertical traverse, care should be taken to avoid the use of bent probes when conducting vertical traverses. If the probe is constructed of a rigid steel material and consists of a main probe without probe extensions, this check need only be performed before the initial field use of the probe, when the probe is recalibrated, when a change is made to the design or material of the probe assembly, and when the probe becomes bent. With such probes, a visual inspection shall be made of the fully assembled probe before each field test to determine if a bend is visible. The probe shall be rotated to detect bends. The inspection results shall be documented in the field test report. If a bend in the probe is visible, the horizontal straightness check shall be performed before the probe is used.

8.3 Rotational Position Check. Before each field test, and each time an extension is added to the probe during a field test, a rotational position check shall be performed on all manually operated probes (except as noted in section 8.3.5 below) to ensure that, throughout testing, the angle-measuring device is either: aligned to within ±1° of the rotational position of the reference scribe line; or is affixed to the probe such that the rotational offset of the device from the reference scribe line is known to within ±1°. This check shall consist of direct measurements of the rotational positions of the reference scribe line and angle-measuring device sufficient to verify that these specifications are met. Annex A in section 18 of this method gives recommended procedures for performing the rotational position check, and Table 2G–2 gives an example data form. Procedures other than those recommended in Annex A in section 18 may be used, provided they demonstrate whether the alignment specification is met and are explained in detail in the field test report.

8.3.1 Angle-measuring device rotational offset. The tester shall maintain a record of the angle-measuring device rotational offset, R_{ADO}, as defined in section 3.1. Note that R_{ADO} is assigned a value of 0° when the angle-measuring device is aligned to within ±1° of the rotational position of the reference scribe line. The R_{ADO} shall be used to determine the yaw angle of flow in accordance with section 8.9.4.

8.3.2 Sign of angle-measuring device rotational offset. The sign of R_{ADO} is positive when the angle-measuring device (as viewed from the ''tail'' end of the probe) is positioned in a clockwise direction from the reference scribe line and negative when the device is positioned in a counterclockwise direction from the reference scribe line.

8.3.3 Angle-measuring devices that can be independently adjusted (e.g., by means of a set screw), after being locked into position on the probe sheath, may be used. However, the R_{ADO} must also take into account this adjustment.

8.3.4 Post-test check. If probe extensions remain attached to the main probe throughout the field test, the rotational position check shall be repeated, at a minimum, at the completion of the field test to ensure that the angle-measuring device has remained within ±2° of its rotational position established prior to testing. At the discretion of the tester, additional checks may be conducted after completion of testing at any sample port or after any test run. If the ±2° specification is not met, all measurements made since the last successful rotational position check must be repeated. Section 18.1.1.3 of Annex A provides an example procedure for performing the post-test check.

8.3.5 Exceptions.

8.3.5.1 A rotational position check need not be performed if, for measurements taken at all velocity traverse points, the yaw angle-measuring device is mounted and aligned directly on the reference scribe line specified in sections 6.1.5.1 and 6.1.5.3 and no independent adjustments, as described in section 8.3.3, are made to device's rotational position.

8.3.5.2 If extensions are detached and re-attached to the probe during a field test, a rotational position check need only be performed the first time an extension is added to the probe, rather than each time the extension is re-attached, if the probe extension is designed to be locked into a mechanically fixed rotational position (e.g., through the use of interlocking grooves), that can re-establish the initial rotational position to within ±1°.

8.4 Leak Checks. A pre-test leak check shall be conducted before each field test. A post-test check shall be performed at the end of the field test, but additional leak checks may be conducted after any test run or group of test runs. The post-test check may also serve as the pre-test check for the next group of test runs. If any leak check is failed, all runs since the last passed leak check are invalid. While performing the leak check procedures, also check each pressure device's responsiveness to changes in pressure.

8.4.1 To perform the leak check on a Type S pitot tube, pressurize the pitot impact opening until at least 7.6 cm H_2O (3 in. H_2O) velocity pressure, or a pressure corresponding to approximately 75 percent of the pressure device's measurement scale, whichever is less, registers on the pressure device; then, close off the impact opening. The pressure shall remain stable (±2.5 mm H_2O, ±0.10 in. H_2O) for at least 15 seconds. Repeat this procedure for the static pressure side, except use suction to obtain the required pressure. Other leak-check procedures may be used, if approved by the Administrator.

8.4.2 To perform the leak check on a 3–D probe, pressurize the probe's impact (P_1) opening until at least 7.6 cm H_2O (3 in. H_2O) velocity pressure, or a pressure corresponding to approximately 75 percent of the pressure device's measurement scale, whichever is less, registers on the pressure device; then, close off the impact opening. The pressure shall remain stable (±2.5 mm

H_2O, ±0.10 in. H_2O) for at least 15 seconds. Check the P_2 and P_3 pressure ports in the same fashion. Other leak-check procedures may be used, if approved by the Administrator.

8.5 Zeroing the Differential Pressure-measuring Device. Zero each differential pressure-measuring device, including the device used for yaw nulling, before each field test. At a minimum, check the zero after each field test. A zero check may also be performed after any test run or group of test runs. For fluid manometers and mechanical pressure gauges (e.g., Magnehelic® gauges), the zero reading shall not deviate from zero by more than ±0.8 mm H_2O (±0.03 in. H_2O) or one minor scale division, whichever is greater, between checks. For electronic manometers, the zero reading shall not deviate from zero between checks by more than: ±0.3 mm H_2O (±0.01 in. H_2O), for full scales less than or equal to 5.1 cm H_2O (2.0 in. H_2O); or ±0.8 mm H_2O (±0.03 in. H_2O), for full scales greater than 5.1 cm H_2O (2.0 in. H_2O). (**Note:** If negative zero drift is not directly readable, estimate the reading based on the position of the gauge oil in the manometer or of the needle on the pressure gauge.) In addition, for all pressure-measuring devices except those used exclusively for yaw nulling, the zero reading shall not deviate from zero by more than 5 percent of the average measured differential pressure at any distinct process condition or load level. If any zero check is failed at a specific process condition or load level, all runs conducted at that process condition or load level since the last passed zero check are invalid.

8.6 Traverse Point Verification. The number and location of the traverse points shall be selected based on Method 1 guidelines. The stack or duct diameter and port nipple lengths, including any extension of the port nipples into the stack or duct, shall be verified the first time the test is performed; retain and use this information for subsequent field tests, updating it as required. Physically measure the stack or duct dimensions or use a calibrated laser device; do not use engineering drawings of the stack or duct. The probe length necessary to reach each traverse point shall be recorded to within ±6.4 mm (±¼ in.) and, for manual probes, marked on the probe sheath. In determining these lengths, the tester shall take into account both the distance that the port flange projects outside of the stack and the depth that any port nipple extends into the gas stream. The resulting point positions shall reflect the true distances from the inside wall of the stack or duct, so that when the tester aligns any of the markings with the outside face of the stack port, the probe's impact port shall be located at the appropriate distance from the inside wall for the respective Method 1 traverse point. Before beginning testing at a particular location, an out-of-stack or duct verification shall be performed on each probe that will be used to ensure that these position markings are correct. The distances measured during the verification must agree with the previously calculated distances to within ±¼ in. For manual probes, the traverse point positions shall be verified by measuring the distance of each mark from the probe's impact pressure port (the P_1 port for a 3-D probe). A comparable out-of-stack test shall be performed on automated probe systems. The probe shall be extended to each of the prescribed traverse point positions. Then, the accuracy of the positioning for each traverse point shall be verified by measuring the distance between the port flange and the probe's impact pressure port.

8.7 Probe Installation. Insert the probe into the test port. A solid material shall be used to seal the port.

8.8 System Response Time. Determine the response time of the probe measurement system. Insert and position the ''cold'' probe (at ambient temperature and pressure) at any Method 1 traverse point. Read and record the probe differential pressure, temperature, and elapsed time at 15-second intervals until stable readings for both pressure and temperature are achieved. The response time is the longer of these two elapsed times. Record the response time.

8.9 Sampling.

8.9.1 Yaw angle measurement protocol. With manual probes, yaw angle measurements may be obtained in two alternative ways during the field test, either by using a yaw angle-measuring device (e.g., digital inclinometer) affixed to the probe, or using a protractor wheel and pointer assembly. For horizontal traversing, either approach may be used. For vertical traversing, i.e., when measuring from on top or into the bottom of a horizontal duct, only the protractor wheel and pointer assembly may be used. With automated probes, curve-fitting protocols may be used to obtain yaw-angle measurements.

8.9.1.1 If a yaw angle-measuring device affixed to the probe is to be used, lock the device on the probe sheath, aligning it either on the reference scribe line or in the rotational offset position established under section 8.3.1.

8.9.1.2 If a protractor wheel and pointer assembly is to be used, follow the procedures in Annex B of this method.

8.9.1.3 Curve-fitting procedures. Curve-fitting routines sweep through a range of yaw angles to create curves correlating pressure to yaw position. To find the zero yaw position and the yaw angle of flow, the curve found in the stack is computationally compared to a similar curve that was previously generated under controlled conditions in a wind tunnel. A probe system that uses a curve-fitting routine for determining the yaw-null position of the probe head may be used, provided that it is verified in a wind tunnel to be able to determine the yaw angle of flow to within ±1°.

8.9.1.4 Other yaw angle determination procedures. If approved by the Administrator, other procedures for determining yaw angle may be used, provided that they are verified in a wind tunnel to be able to perform the yaw angle calibration procedure as described in section 10.5.

8.9.2 Sampling strategy. At each traverse point, first yaw-null the probe, as described in section 8.9.3, below. Then, with the probe oriented into the direction of flow, measure and record the yaw angle, the differential pressure and the temperature at the traverse point, after stable readings are achieved, in accordance with sections 8.9.4 and 8.9.5. At the start of testing in each port (i.e., after a probe has been inserted into the flue gas stream), allow at least the response time to elapse before beginning to take measurements at the first traverse point accessed from that port. Provided that the probe is not removed from the flue gas stream, measurements may be taken at subsequent traverse points accessed from the same test port without waiting again for the response time to elapse.

8.9.3 Yaw-nulling procedure. In preparation for yaw angle determination, the probe must first be yaw nulled. After positioning the probe at the appropriate traverse point, perform the following procedures.

8.9.3.1 For Type S probes, rotate the probe until a null differential pressure reading is obtained. The direction of the probe rotation shall be such that the thermocouple is located downstream of the probe pressure ports at the yaw-null position. Rotate the probe 90° back from the yaw-null position to orient the impact pressure port into the direction of flow. Read and record the angle displayed by the angle-measuring device.

8.9.3.2 For 3-D probes, rotate the probe until a null differential pressure reading (the difference in pressures across the P_2 and P_3 pressure ports is zero, i.e., $P_2 = P_3$) is indicated by the yaw angle pressure gauge. Read and record the angle displayed by the angle-measuring device.

8.9.3.3 Sign of the measured angle. The angle displayed on the angle-measuring device is considered positive when the probe's impact pressure port (as viewed from the ''tail'' end of the probe) is oriented in a clockwise rotational position relative to the stack or duct axis and is considered negative when the probe's impact pressure port is oriented in a counterclockwise rotational position (see Figure 2G–7).

8.9.4 Yaw angle determination. After performing the applicable yaw-nulling procedure in section 8.9.3, determine the yaw angle of flow according to one of the following procedures. Special care must be observed to take into account the signs of the recorded angle reading and all offsets.

8.9.4.1 Direct-reading. If all rotational offsets are zero or if the angle-measuring device rotational offset (R_{ADO}) determined in section 8.3 exactly compensates for the scribe line rotational offset (R_{SLO}) determined in section 10.5, then the magnitude of the yaw angle is equal to the displayed angle-measuring device reading from section 8.9.3.1 or 8.9.3.2. The algebraic sign of the yaw angle is determined in accordance with section 8.9.3.3. [**Note:** Under certain circumstances (e.g., testing of horizontal ducts) a 90° adjustment to the angle-measuring device readings may be necessary to obtain the correct yaw angles.]

8.9.4.2 Compensation for rotational offsets during data reduction. When the angle-measuring device rotational offset does not compensate for reference scribe line rotational offset, the following procedure shall be used to determine the yaw angle:

(a) Enter the reading indicated by the angle-measuring device from section 8.9.3.1 or 8.9.3.2.

(b) Associate the proper algebraic sign from section 8.9.3.3 with the reading in step (a).

(c) Subtract the reference scribe line rotational offset, R_{SLO}, from the reading in step (b).

(d) Subtract the angle-measuring device rotational offset, R_{ADO}, if any, from the result obtained in step (c).

(e) The final result obtained in step (d) is the yaw angle of flow.

[**Note:** It may be necessary to first apply a 90° adjustment to the reading in step (a), in order to obtain the correct yaw angle.]

8.9.4.3 Record the yaw angle measurements on a form similar to Table 2G–3.

8.9.5 Impact velocity determination. Maintain the probe rotational position established during the yaw angle determination. Then, begin recording the pressure-measuring device readings. These pressure measurements shall be taken over a sampling period of sufficiently long duration to ensure representative readings at each traverse point. If the pressure measurements are determined from visual readings of the pressure device or display, allow sufficient time to observe the pulsation in the readings to obtain a sight-weighted average, which is then recorded manually. If an automated data acquisition system (e.g., data logger, computer-based data recorder, strip chart recorder) is used to record the pressure measurements, obtain an integrated average of all pressure readings at the traverse point. Stack or duct gas temperature measurements shall be recorded, at a minimum, once at each traverse point. Record all necessary data as shown in the example field data form (Table 2G–3).

8.9.6 Alignment check. For manually operated probes, after the required yaw angle and differential pressure and temperature measurements have been made at each traverse point, verify (e.g., by visual inspection) that the yaw angle-measuring device has remained in proper alignment with the reference scribe line or with the rotational offset position established in section 8.3. If, for a particular traverse point, the angle-measuring device is found to be in proper alignment, proceed to the next traverse point; otherwise, re-align the device and repeat the angle and differential pressure measurements at the traverse point. In the course of a traverse, if a mark used to properly align the angle-measuring device (e.g., as described in section 18.1.1.1) cannot be located, re-establish the alignment mark before proceeding with the traverse.

8.10 Probe Plugging. Periodically check for plugging of the pressure ports by observing the responses on the pressure differential readouts. Plugging causes erratic results or sluggish responses. Rotate the probe to determine whether the readouts respond in the expected direction. If plugging is detected, correct the problem and repeat the affected measurements.

8.11 Static Pressure. Measure the static pressure in the stack or duct using the equipment described in section 6.7.

8.11.1 If a Type S probe is used for this measurement, position the probe at or between any traverse point(s) and rotate the probe until a null differential pressure reading is obtained. Disconnect the tubing from one of the pressure ports; read and record the Δ P. For pressure devices with one-directional scales, if a deflection in the positive direction is noted with the negative side disconnected, then the static pressure is positive. Likewise, if a deflection in the positive direction is noted with the positive side disconnected, then the static pressure is negative.

8.11.2 If a 3–D probe is used for this measurement, position the probe at or between any traverse point(s) and rotate the probe until a null differential pressure reading is obtained at P_2–P_3. Rotate the probe 90°. Disconnect the P_2 pressure side of the probe and read the pressure P_1–P_{bar} and record as the static pressure. (**Note:** The spherical probe, specified in section 6.1.2 of Method 2F, is unable to provide this measurement and shall not be used to take static pressure measurements.)

8.12 Atmospheric Pressure. Determine the atmospheric pressure at the sampling elevation during each test run following the procedure described in section 2.5 of Method 2.

8.13 Molecular Weight. Determine the stack or duct gas dry molecular weight. For combustion processes or processes that emit essentially CO_2, O_2, CO, and N_2, use Method 3 or 3A. For processes emitting essentially air, an analysis need not be conducted; use a dry molecular weight of 29.0. Other methods may be used, if approved by the Administrator.

8.14 Moisture. Determine the moisture content of the stack gas using Method 4 or equivalent.

8.15 Data Recording and Calculations. Record all required data on a form similar to Table 2G–3.

8.15.1 2–D probe calibration coefficient. When a Type S pitot tube is used in the field, the appropriate calibration coefficient as determined in section 10.6 shall be used to perform velocity calculations. For calibrated Type S pitot tubes, the A-side coefficient shall be used when the A-side of the tube faces the flow, and the B-side coefficient shall be used when the B-side faces the flow.

8.15.2 3–D calibration coefficient. When a 3–D probe is used to collect data with this method, follow the provisions for the calibration of 3–D probes in section 10.6 of Method 2F to obtain the appropriate velocity calibration coefficient (F_2 as derived using Equation 2F–2 in Method 2F) corresponding to a pitch angle position of 0°.

8.15.3 Calculations. Calculate the yaw-adjusted velocity at each traverse point using the equations presented in section 12.2. Calculate the test run average stack gas velocity by finding the arithmetic average of the point velocity results in accordance with sections 12.3 and 12.4, and calculate the stack gas volumetric flow rate in accordance with section 12.5 or 12.6, as applicable.

9.0 Quality Control

9.1 Quality Control Activities. In conjunction with the yaw angle determination and the pressure and temperature measurements specified in section 8.9, the following quality control checks should be performed.

9.1.1 Range of the differential pressure gauge. In accordance with the specifications in section 6.4, ensure that the proper differential pressure gauge is being used for the range of Δ P values encountered. If it is necessary to change to a more sensitive gauge, replace the gauge with a gauge calibrated according to section 10.3.3, perform the leak check described in section 8.4 and the zero check described in section 8.5, and repeat the differential pressure and temperature readings at each traverse point.

9.1.2 Horizontal stability check. For horizontal traverses of a stack or duct, visually check that the probe shaft is maintained in a horizontal position prior to taking a pressure reading. Periodically, during a test run, the probe's horizontal stability should be verified by placing a carpenter's level, a digital inclinometer, or other angle-measuring device on the portion of the probe sheath that extends outside of the test port. A comparable check should be performed by automated systems.

10.0 Calibration

10.1 Wind Tunnel Qualification Checks. To qualify for use in calibrating probes, a wind tunnel shall have the design features specified in section 6.11 and satisfy the following qualification criteria. The velocity pressure cross-check in section 10.1.1 and axial flow verification in section 10.1.2 shall be performed before the initial use of the wind tunnel and repeated immediately after any alteration occurs in the wind tunnel's configuration, fans, interior surfaces, straightening vanes, controls, or other properties that could reasonably be expected to alter the flow pattern or velocity stability in the tunnel. The owner or operator of a wind tunnel used to calibrate probes according to this method shall maintain records documenting that the wind tunnel meets the requirements of sections 10.1.1 and 10.1.2 and shall provide these records to the Administrator upon request.

10.1.1 Velocity pressure cross-check. To verify that the wind tunnel produces the same velocity at the tested probe head as at the calibration pitot tube impact port, perform the following cross-check. Take three differential pressure measurements at the fixed calibration pitot tube location, using the calibration pitot tube specified in section 6.10, and take three measurements with the calibration pitot tube at the wind tunnel calibration location, as defined in section 3.21. Alternate the measurements between the two positions. Perform this procedure at the lowest and highest velocity settings at which the probes will be calibrated. Record the values on a form similar to Table 2G–4. At each velocity setting, the average velocity pressure obtained at the wind tunnel calibration location shall be within ±2 percent or 2.5 mm H_2O (0.01 in. H_2O), whichever is less restrictive, of the average velocity pressure obtained at the fixed calibration pitot tube location. This comparative check shall be performed at 2.5-cm (1-in.), or smaller,

intervals across the full length, width, and depth (if applicable) of the wind tunnel calibration location. If the criteria are not met at every tested point, the wind tunnel calibration location must be redefined, so that acceptable results are obtained at every point. Include the results of the velocity pressure cross-check in the calibration data section of the field test report. (See section 16.1.4.)

10.1.2 Axial flow verification. The following procedures shall be performed to demonstrate that there is fully developed axial flow within the wind tunnel calibration location and at the calibration pitot tube location. Two options are available to conduct this check.

10.1.2.1 Using a calibrated 3–D probe. A probe that has been previously calibrated in a wind tunnel with documented axial flow (as defined in section 3.22) may be used to conduct this check. Insert the calibrated 3–D probe into the wind tunnel test section using the tested probe port. Following the procedures in sections 8.9 and 12.2 of Method 2F, determine the yaw and pitch angles at all the point(s) in the test section where the velocity pressure cross-check, as specified in section 10.1.1, is performed. This includes all the points in the calibration location and the point where the calibration pitot tube will be located. Determine the yaw and pitch angles at each point. Repeat these measurements at the highest and lowest velocities at which the probes will be calibrated. Record the values on a form similar to Table 2G–5. Each measured yaw and pitch angle shall be within ±3@ of 0@. Exceeding the limits indicates unacceptable flow in the test section. Until the problem is corrected and acceptable flow is verified by repetition of this procedure, the wind tunnel shall not be used for calibration of probes. Include the results of the axial flow verification in the calibration data section of the field test report. (See section 16.1.4.)

10.1.2.2 Using alternative probes. Axial flow verification may be performed using an uncalibrated prism-shaped 3–D probe (e.g., DA or DAT probe) or an uncalibrated wedge probe. (Figure 2G–8 illustrates a typical wedge probe.) This approach requires use of two ports: the tested probe port and a second port located 90° from the tested probe port. Each port shall provide access to all the points within the wind tunnel test section where the velocity pressure cross-check, as specified in section 10.1.1, is conducted. The probe setup shall include establishing a reference yaw-null position on the probe sheath to serve as the location for installing the angle-measuring device. Physical design features of the DA, DAT, and wedge probes are relied on to determine the reference position. For the DA or DAT probe, this reference position can be determined by setting a digital inclinometer on the flat facet where the P_1 pressure port is located and then identifying the rotational position on the probe sheath where a second angle-measuring device would give the same angle reading. The reference position on a wedge probe shaft can be determined either geometrically or by placing a digital inclinometer on each side of the wedge and rotating the probe until equivalent readings are obtained. With the latter approach, the reference position is the rotational position on the probe sheath where an angle-measuring device would give a reading of 0°. After installation of the angle-measuring device in the reference yaw-null position on the probe sheath, determine the yaw angle from the tested port. Repeat this measurement using the 90° offset port, which provides the pitch angle of flow. Determine the yaw and pitch angles at all the point(s) in the test section where the velocity pressure cross-check, as specified in section 10.1.1, is performed. This includes all the points in the wind tunnel calibration location and the point where the calibration pitot tube will be located. Perform this check at the highest and lowest velocities at which the probes will be calibrated. Record the values on a form similar to Table 2G–5. Each measured yaw and pitch angle shall be within ±3° of 0°. Exceeding the limits indicates unacceptable flow in the test section. Until the problem is corrected and acceptable flow is verified by repetition of this procedure, the wind tunnel shall not be used for calibration of probes. Include the results in the probe calibration report.

10.1.3 Wind tunnel audits.

10.1.3.1 Procedure. Upon the request of the Administrator, the owner or operator of a wind tunnel shall calibrate a 2-D audit probe in accordance with the procedures described in sections 10.3 through 10.6. The calibration shall be performed at two velocities that encompass the velocities typically used for this method at the facility. The resulting calibration data shall be submitted to the Agency in an audit test report. These results shall be compared by the Agency to reference calibrations of the audit probe at the same velocity settings obtained at two different wind tunnels.

10.1.3.2 Acceptance criterion. The audited tunnel's calibration coefficient is acceptable if it is within 3 percent of the reference calibrations obtained at each velocity setting by one (or both) of the wind tunnels. If the acceptance criterion is not met at each calibration velocity setting, the audited wind tunnel shall not be used to calibrate probes for use under this method until the problems are resolved and acceptable results are obtained upon completion of a subsequent audit.

10.2 Probe Inspection.

10.2.1 Type S probe. Before each calibration of a Type S probe, verify that one leg of the tube is permanently marked A, and the other, B. Carefully examine the pitot tube from the top, side, and ends. Measure the angles (α_1, α_2, β_1, and β_2) and the dimensions (w and z) illustrated in Figures 2–2 and 2–3 in Method 2. Also measure the dimension A, as shown in the diagram in Table 2G–1, and the external tubing diameter (dimension D_t, Figure 2–2b in Method 2). For the purposes of this method, D_t shall be no less than 9.5 mm (3/8 in.). The base-to-opening plane distances P_A and P_B in Figure 2–3 of Method 2 shall be equal, and the dimension A in Table 2G–1 should be between $2.10D_t$ and $3.00D_t$. Record the inspection findings and probe measurements on a form similar to Table CD2–1 of the ''Quality Assurance Handbook for Air Pollution Measurement Systems: Volume III, Stationary Source-Specific Methods' (EPA/600/R–94/038c, September 1994). For reference, this form is reproduced herein as Table 2G–1. The pitot tube shall not be used under this method if it fails to meet the specifications in this section and the alignment specifications in section 6.1.1. All Type S probes used to collect data with this method shall be calibrated according to the procedures outlined in sections 10.3 through 10.6 below. During calibration, each Type S pitot tube shall be configured in the same manner as used, or planned to be used, during the field test, including all components in the probe assembly (e.g., thermocouple, probe sheath, sampling nozzle). Probe shaft extensions that do not affect flow around the probe head need not be attached during calibration.

10.2.2 3-D probe. If a 3-D probe is used to collect data with this method, perform the pre-calibration inspection according to procedures in Method 2F, section 10.2.

10.3 Pre-Calibration Procedures. Prior to calibration, a scribe line shall have been placed on the probe in accordance with section 10.4. The yaw angle and velocity calibration procedures shall not begin until the pre-test requirements in sections 10.3.1 through 10.3.4 have been met.

10.3.1 Perform the horizontal straightness check described in section 8.2 on the probe assembly that will be calibrated in the wind tunnel.

10.3.2 Perform a leak check in accordance with section 8.4.

10.3.3 Except as noted in section 10.3.3.3, calibrate all differential pressure-measuring devices to be used in the probe calibrations, using the following procedures. At a minimum, calibrate these devices on each day that probe calibrations are performed.

10.3.3.1 Procedure. Before each wind tunnel use, all differential pressure-measuring devices shall be calibrated against the reference device specified in section 6.4.3 using a common pressure source. Perform the calibration at three reference pressures representing 30, 60, and 90 percent of the full-scale range of the pressure-measuring device being calibrated. For an inclined-vertical manometer, perform separate calibrations on the inclined and vertical portions of the measurement scale, considering each portion of the scale to be a separate full-scale range. [For example, for a manometer with a 0-to 2.5-cm H_2O (0-to 1-in. H_2O) inclined scale and a 2.5-to 12.7-cm H_2O (1-to 5-in. H_2O) vertical scale, calibrate the inclined portion at 7.6, 15.2, and 22.9 mm H_2O (0.3, 0.6, and 0.9 in. H_2O), and calibrate the vertical portion at 3.8, 7.6, and 11.4 cm H_2O (1.5, 3.0, and 4.5 in. H_2O).] Alternatively, for the vertical portion of the scale, use three evenly spaced reference pressures, one of which is equal to or higher than the highest differential pressure expected in field applications.

10.3.3.2 Acceptance criteria. At each pressure setting, the two pressure readings made using the reference device and the pressure-measuring device being calibrated shall agree to within #2 percent of full scale of the device being calibrated or 0.5 mm H_2O (0.02 in. H_2O), whichever is less restrictive. For an inclined-vertical manometer, these

requirements shall be met separately using the respective full-scale upper limits of the inclined and vertical portions of the scale. Differential pressure-measuring devices not meeting the #2 percent of full scale or 0.5 mm H_2O (0.02 in. H_2O) calibration requirement shall not be used.

10.3.3.3 Exceptions. Any precision manometer that meets the specifications for a reference device in section 6.4.3 and that is not used for field testing does not require calibration, but must be leveled and zeroed before each wind tunnel use. Any pressure device used exclusively for yaw nulling does not require calibration, but shall be checked for responsiveness to rotation of the probe prior to each wind tunnel use.

10.3.4 Calibrate digital inclinometers on each day of wind tunnel or field testing (prior to beginning testing) using the following procedures. Calibrate the inclinometer according to the manufacturer's calibration procedures. In addition, use a triangular block (illustrated in Figure 2G–9) with a known angle, '', independently determined using a protractor or equivalent device, between two adjacent sides to verify the inclinometer readings. (**Note:** If other angle-measuring devices meeting the provisions of section 6.2.3 are used in place of a digital inclinometer, comparable calibration procedures shall be performed on such devices.) Secure the triangular block in a fixed position. Place the inclinometer on one side of the block (side A) to measure the angle of inclination (R_1). Repeat this measurement on the adjacent side of the block (side B) using the inclinometer to obtain a second angle reading (R_2). The difference of the sum of the two readings from 180° (i.e., $180R_1R_2$) shall be within #2 of the known angle, ''.

10.4 Placement of Reference Scribe Line. Prior to the first calibration of a probe, a line shall be permanently inscribed on the main probe sheath to serve as a reference mark for determining yaw angles. Annex C in section 18 of this method gives a guideline for placement of the reference scribe line.

10.4.1 This reference scribe line shall meet the specifications in sections 6.1.5.1 and 6.1.5.3 of this method. To verify that the alignment specification in section 6.1.5.3 is met, secure the probe in a horizontal position and measure the rotational angle of each scribe line and scribe line segment using an angle-measuring device that meets the specifications in section 6.2.1 or 6.2.3. For any scribe line that is longer than 30.5 cm (12 in.), check the line's rotational position at 30.5-cm (12-in.) intervals. For each line segment that is 12 in. or less in length, check the rotational position at the two endpoints of the segment. To meet the alignment specification in section 6.1.5.3, the minimum and maximum of all of the rotational angles that are measured along the full length of main probe must not differ by more than 2°. (**Note:** A short reference scribe line segment [e.g., 15.2 cm (6 in.) or less in length] meeting the alignment specifications in section 6.1.5.3 is fully acceptable under this method. See section 18.1.1.1 of Annex A for an example of a probe marking procedure, suitable for use with a short reference scribe line.)

10.4.2 The scribe line should be placed on the probe first and then its offset from the yaw-null position established (as specified in section 10.5). The rotational position of the reference scribe line relative to the yaw-null position of the probe, as determined by the yaw angle calibration procedure in section 10.5, is the reference scribe line rotational offset, R_{SLO}. The reference scribe line rotational offset shall be recorded and retained as part of the probe's calibration record.

10.4.3 Scribe line for automated probes. A scribe line may not be necessary for an automated probe system if a reference rotational position of the probe is built into the probe system design. For such systems, a ''flat'' (or comparable, clearly identifiable physical characteristic) should be provided on the probe casing or flange plate to ensure that the reference position of the probe assembly remains in a vertical or horizontal position. The rotational offset of the flat (or comparable, clearly identifiable physical characteristic) needed to orient the reference position of the probe assembly shall be recorded and maintained as part of the automated probe system's specifications.

10.5 Yaw Angle Calibration Procedure. For each probe used to measure yaw angles with this method, a calibration procedure shall be performed in a wind tunnel meeting the specifications in section 10.1 to determine the rotational position of the reference scribe line relative to the probe's yaw-null position. This procedure shall be performed on the main probe with all devices that will be attached to the main probe in the field [such as thermocouples, resistance temperature detectors (RTDs), or sampling nozzles] that may affect the flow around the probe head. Probe shaft extensions that do not affect flow around the probe head need not be attached during calibration. At a minimum, this procedure shall include the following steps.

10.5.1 Align and lock the angle-measuring device on the reference scribe line. If a marking procedure (such as described in section 18.1.1.1) is used, align the angle-measuring device on a mark within ±1° of the rotational position of the reference scribe line. Lock the angle-measuring device onto the probe sheath at this position.

10.5.2 Zero the pressure-measuring device used for yaw nulling.

10.5.3 Insert the probe assembly into the wind tunnel through the entry port, positioning the probe's impact port at the calibration location. Check the responsiveness of the pressure-measurement device to probe rotation, taking corrective action if the response is unacceptable.

10.5.4 Ensure that the probe is in a horizontal position, using a carpenter's level.

10.5.5 Rotate the probe either clockwise or counterclockwise until a yaw null [zero ΔP for a Type S probe or zero (P_2-P_3) for a 3–D probe] is obtained. If using a Type S probe with an attached thermocouple, the direction of the probe rotation shall be such that the thermocouple is located downstream of the probe pressure ports at the yaw-null position.

10.5.6 Use the reading displayed by the angle-measuring device at the yaw-null position to determine the magnitude of the reference scribe line rotational offset, R_{SLO}, as defined in section 3.15. Annex D in section 18 of this method gives a recommended procedure for determining the magnitude of R_{SLO} with a digital inclinometer and a second procedure for determining the magnitude of R_{SLO} with a protractor wheel and pointer device. Table 2G–6 gives an example data form and Table 2G–7 is a look-up table with the recommended procedure. Procedures other than those recommended in Annex D in section 18 may be used, if they can determine R_{SLO} to within 1° and are explained in detail in the field test report. The algebraic sign of R_{SLO} will either be positive if the rotational position of the reference scribe line (as viewed from the ''tail'' end of the probe) is clockwise, or negative, if counterclockwise with respect to the probe's yaw-null position. (This is illustrated in Figure 2G–10.)

10.5.7 The steps in sections 10.5.3 through 10.5.6 shall be performed twice at each of the velocities at which the probe will be calibrated (in accordance with section 10.6). Record the values of R_{SLO}.

10.5.8 The average of all of the RSLO values shall be documented as the reference scribe line rotational offset for the probe.

10.5.9 Use of reference scribe line offset. The reference scribe line rotational offset shall be used to determine the yaw angle of flow in accordance with section 8.9.4.

10.6 Velocity Calibration Procedure. When a 3–D probe is used under this method, follow the provisions for the calibration of 3–D probes in section 10.6 of Method 2F to obtain the necessary velocity calibration coefficients (F_2 as derived using Equation 2F–2 in Method 2F) corresponding to a pitch angle position of 0°. The following procedure applies to Type S probes. This procedure shall be performed on the main probe and all devices that will be attached to the main probe in the field (e.g., thermocouples, RTDs, sampling nozzles) that may affect the flow around the probe head. Probe shaft extensions that do not affect flow around the probe head need not be attached during calibration. (Note: If a sampling nozzle is part of the assembly, two additional requirements must be satisfied before proceeding. The distance between the nozzle and the pitot tube shall meet the minimum spacing requirement prescribed in Method 2, and a wind tunnel demonstration shall be performed that shows the probe's ability to yaw null is not impaired when the nozzle is drawing sample.) To obtain velocity calibration coefficient(s) for the tested probe, proceed as follows.

10.6.1 Calibration velocities. The tester may calibrate the probe at two nominal wind tunnel velocity settings of 18.3 m/sec and 27.4 m/sec (60 ft/sec and 90 ft/sec) and average the results of these calibrations, as described in sections 10.6.12 through 10.6.14, in order to generate the calibration coefficient, C_p. If this option is selected, this calibration coefficient may be used for all field applications where the velocities are 9.1 m/sec (30 ft/sec) or greater. Alternatively, the tester may customize the probe calibration for a particular field test application (or for a series of applications), based on the expected average velocity(ies) at the test

site(s). If this option is selected, generate the calibration coefficients by calibrating the probe at two nominal wind tunnel velocity settings, one of which is less than or equal to and the other greater than or equal to the expected average velocity(ies) for the field application(s), and average the results as described in sections 10.6.12 through 10.6.14. Whichever calibration option is selected, the probe calibration coefficient(s) obtained at the two nominal calibration velocities shall meet the conditions specified in sections 10.6.12 through 10.6.14.

10.6.2 Connect the tested probe and calibration pitot tube to their respective pressure-measuring devices. Zero the pressure-measuring devices. Inspect and leak-check all pitot lines; repair or replace them, if necessary. Turn on the fan, and allow the wind tunnel air flow to stabilize at the first of the selected nominal velocity settings.

10.6.3 Position the calibration pitot tube at its measurement location (determined as outlined in section 6.11.4.3), and align the tube so that its tip is pointed directly into the flow. Ensure that the entry port surrounding the tube is properly sealed. The calibration pitot tube may either remain in the wind tunnel throughout the calibration, or be removed from the wind tunnel while measurements are taken with the probe being calibrated.

10.6.4 Check the zero setting of each pressure-measuring device.

10.6.5 Insert the tested probe into the wind tunnel and align it so that the designated pressure port (e.g., either the A-side or B-side of a Type S probe) is pointed directly into the flow and is positioned within the wind tunnel calibration location (as defined in section 3.21). Secure the probe at the 0° pitch angle position. Ensure that the entry port surrounding the probe is properly sealed.

10.6.6 Read the differential pressure from the calibration pitot tube (ΔPstd), and record its value. Read the barometric pressure to within ±2.5 mm Hg (±0.1 in. Hg) and the temperature in the wind tunnel to within 0.6°C (1°F). Record these values on a data form similar to Table 2G–8.

10.6.7 After the tested probe's differential pressure gauges have had sufficient time to stabilize, yaw null the probe (and then rotate it back 90° for Type S probes), then obtain the differential pressure reading (ΔP). Record the yaw angle and differential pressure readings.

10.6.8 Take paired differential pressure measurements with the calibration pitot tube and tested probe (according to sections 10.6.6 and 10.6.7). The paired measurements in each replicate can be made either simultaneously (i.e., with both probes in the wind tunnel) or by alternating the measurements of the two probes (i.e., with only one probe at a time in the wind tunnel).

10.6.9 Repeat the steps in sections 10.6.6 through 10.6.8 at the same nominal velocity setting until three pairs of ΔP readings have been obtained from the calibration pitot tube and the tested probe.

10.6.10 Repeat the steps in sections 10.6.6 through 10.6.9 above for the A-side and B-side of the Type S pitot tube. For a probe assembly constructed such that its pitot tube is always used in the same orientation, only one side of the pitot tube need be calibrated (the side that will face the flow). However, the pitot tube must still meet the alignment and dimension specifications in section 6.1.1 and must have an average deviation (σ) value of 0.01 or less as provided in section 10.6.12.4.

10.6.11 Repeat the calibration procedures in sections 10.6.6 through 10.6.10 at the second selected nominal wind tunnel velocity setting.

10.6.12 Perform the following calculations separately on the A-side and B-side values.

10.6.12.1 Calculate a C_p value for each of the three replicates performed at the lower velocity setting where the calibrations were performed using Equation 2–2 in section 4.1.4 of Method 2.

10.6.12.2 Calculate the arithmetic average, $C_{p(avg\text{-}low)}$, of the three C_p values.

10.6.12.3 Calculate the deviation of each of the three individual values of C_p from the A-side average $C_{p(avg\text{-}low)}$ value using Equation 2–3 in Method 2.

10.6.12.4 Calculate the average deviation (σ) of the three individual C_p values from $C_{p(avg\text{-}low)}$ using Equation 2–4 in Method 2. Use the Type S pitot tube only if the values of σ (side A) and σ (side B) are less than or equal to 0.01. If both A-side and B-side calibration coefficients are calculated, the absolute value of the difference between $C_{p(avg\text{-}low)}$ (side A) and $C_{p(avg\text{-}low)}$ (side B) must not exceed 0.01.

10.6.13 Repeat the calculations in section 10.6.12 using the data obtained at the higher velocity setting to derive the arithmetic C_p values at the higher velocity setting, $C_{p(avg\text{-}high)}$, and to determine whether the conditions in 10.6.12.4 are met by both the A-side and B-side calibrations at this velocity setting.

10.6.14 Use equation 2G–1 to calculate the percent difference of the averaged C_p values at the two calibration velocities.

$$\%\text{Difference} = \frac{C_{p(avg\text{-}low)} - C_{p(avg\text{-}high)}}{C_{p(avg\text{-}low)}} \times 100\% \qquad \text{Eq. 2G-1}$$

The percent difference between the averaged C_p values shall not exceed ±3 percent. If the specification is met, average the A-side values of $C_{p(avg\text{-}low)}$ and $C_{p(avg\text{-}high)}$ to produce a single A-side calibration coefficient, C_p. Repeat for the B-side values if calibrations were performed on that side of the pitot. If the specification is not met, make necessary adjustments in the selected velocity settings and repeat the calibration procedure until acceptable results are obtained.

10.6.15 If the two nominal velocities used in the calibration were 18.3 and 27.4 m/sec (60 and 90 ft/sec), the average C_p from section 10.6.14 is applicable to all velocities 9.1 m/sec (30 ft/sec) or greater. If two other nominal velocities were used in the calibration, the resulting average C_p value shall be applicable only in situations where the velocity calculated using the calibration coefficient is neither less than the lower nominal velocity nor greater than the higher nominal velocity.

10.7 Recalibration. Recalibrate the probe using the procedures in section 10 either within 12 months of its first field use after its most recent calibration or after 10 field tests (as defined in section 3.3), whichever occurs later. In addition, whenever there is visible damage to the probe head, the probe shall be recalibrated before it is used again.

10.8 Calibration of pressure-measuring devices used in the field. Before its initial use in a field test, calibrate each pressure-measuring device (except those used exclusively for yaw nulling) using the three-point calibration procedure described in section 10.3.3. The device shall be recalibrated according to the procedure in section 10.3.3 no later than 90 days after its first field use following its most recent calibration. At the discretion of the tester, more frequent calibrations (e.g., after a field test) may be performed. No adjustments, other than adjustments to the zero setting, shall be made to the device between calibrations.

10.8.1 Post-test calibration check. A single-point calibration check shall be performed on each pressure-measuring device after completion of each field test. At the discretion of the tester, more frequent single-point calibration checks (e.g., after one or more field test runs) may be performed. It is recommended that the post-test check be performed before leaving the field test site. The check shall be performed at a pressure between 50 and 90 percent of full scale by taking a common pressure reading with the tested probe and a reference pressure-measuring device (as described in section 6.4.4) or by challenging the tested device with a reference pressure source (as described in section 6.4.4) or by performing an equivalent check using a reference device approved by the Administrator.

10.8.2 Acceptance criterion. At the selected pressure setting, the pressure readings made using the reference device and the tested device shall agree to within ±3 percent of full scale of the tested device or 0.8 mm H_2O (0.03 in. H_2O), whichever is less restrictive. If this specification is met, the test data collected during the field test are valid. If the specification is not met, all test data collected since the last successful calibration or calibration check are invalid and shall be repeated using a pressure-measuring device with a current, valid calibration. Any device that fails the calibration check shall not be used in a field test until a successful

recalibration is performed according to the procedures in section 10.3.3.

10.9 Temperature Gauges. Same as Method 2, section 4.3. The alternative thermocouple calibration procedures outlined in Emission Measurement Center (EMC) Approved Alternative Method (ALT–011) ''Alternative Method 2 Thermocouple Calibration Procedure'' may be performed. Temperature gauges shall be calibrated no more than 30 days prior to the start of a field test or series of field tests and recalibrated no more than 30 days after completion of a field test or series of field tests.

10.10 Barometer. Same as Method 2, section 4.4. The barometer shall be calibrated no more than 30 days prior to the start of a field test or series of field tests.

11.0 Analytical Procedure

Sample collection and analysis are concurrent for this method (see section 8.0).

12.0 Data Analysis and Calculations

These calculations use the measured yaw angle and the differential pressure and temperature measurements at individual traverse points to derive the near-axial flue gas velocity ($_{a(ii)}$) at each of those points. The near-axial velocity values at all traverse points that comprise a full stack or duct traverse are then averaged to obtain the average near-axial stack or duct gas velocity $a(_{avg})$.

12.1 Nomenclature

A = Cross-sectional area of stack or duct at the test port location, m_2 (ft_2).

B_{ws} = Water vapor in the gas stream (from Method 4 or alternative), proportion by volume.

C_p = Pitot tube calibration coefficient, dimensionless.

$F_{2(i)}$ = 3-D probe velocity coefficient at 0 pitch, applicable at traverse point i.

K_p = Pitot tube constant,

$$34.97\frac{m}{sec}\left[\frac{(g/g\text{-}mole)(mm\ Hg)}{(°K)(mm\ H_2O)}\right]^{1/2}$$

for the metric system, and

$$85.49\frac{ft}{sec}\left[\frac{(lb/lb\text{-}mole)(in.\ Hg)}{(°R)(in.\ H_2O)}\right]^{1/2}$$

for the English system.

M_d = Molecular weight of stack or duct gas, dry basis (see section 8.13), g/g-mole (lb/lb-mole).

M_s = Molecular weight of stack or duct gas, wet basis, g/g-mole (lb/lb-mole).

$$M_s = M_d\left(1 - B_{ws}\right) + 18.0B_{ws} \quad \text{Eq. 2G-2}$$

P_{bar} = Barometric pressure at velocity measurement site, mm Hg (in. Hg).

P_g = Stack or duct static pressure, mm H_2O (in. H_2O).

P_s = Absolute stack or duct pressure, mm Hg (in. Hg),

$$P_s = P_{bar} + \frac{P_g}{13.6} \quad \text{Eq. 2G-3}$$

P_{std} = Standard absolute pressure, 760 mm Hg (29.92 in. Hg).

13.6 = Conversion from mm H_2O (in. H_2O) to mm Hg (in. Hg).

Q_{sd} = Average dry-basis volumetric stack or duct gas flow rate corrected to standard conditions, dscm/hr (dscf/hr).

Q_{sw} = Average wet-basis volumetric stack or duct gas flow rate corrected to standard conditions, wscm/hr (wscf/hr).

$ts_{(i)}$ = Stack or duct temperature, °C (°F), at traverse point i.

$T_{s(i)}$ = Absolute stack or duct temperature, °K (°R), at traverse point i.

$$T_{s(i)} = 273 + t_{s(i)} \quad \text{Eq. 2G-4}$$

for the metric system, and

$$T_{s(i)} = 460 + t_{s(i)} \quad \text{Eq. 2G-5}$$

for the English system.

$T_{s(avg)}$=Average absolute stack or duct gas temperature across all traverse points.

T_{std}=Standard absolute temperature, 293°K (528°R).

$v_{a(i)}$=Measured stack or duct gas impact velocity, m/sec (ft/sec), at traverse point i.

$v_{a(avg)}$=Average near-axial stack or duct gas velocity, m/sec (ft/sec) across all traverse points.

ΔP_i=Velocity head (differential pressure) of stack or duct gas, mm H_2O (in. H_2O), applicable at traverse point i.

(P_1-P_2)=Velocity head (differential pressure) of stack or duct gas measured by a 3-D probe, mm H_2O (in. H_2O), applicable at traverse point i.

3,600=Conversion factor, sec/hr.

18.0=Molecular weight of water, g/g-mole (lb/lb-mole).

$\theta_{y(i)}$=Yaw angle of the flow velocity vector, at traverse point i.

n=Number of traverse points.

12.2 Traverse Point Velocity Calculations. Perform the following calculations from the measurements obtained at each traverse point.

12.2.1 Selection of calibration coefficient. Select the calibration coefficient as described in section 10.6.1.

12.2.2 Near-axial traverse point velocity. When using a Type S probe, use the following equation to calculate the traverse point near-axial velocity ($v_{a(i)}$) from the differential pressure (ΔP_i), yaw angle ($\theta_{y(i)}$), absolute stack or duct standard temperature ($T_{s(i)}$) measured at traverse point i, the absolute stack or duct pressure (P_s), and molecular weight (M_s).

$$v_{a(i)} = K_p C_p \sqrt{\frac{(\Delta P)_i T_{s(i)}}{P_s M_s}}\left(\cos\theta_{y(i)}\right) \quad \text{Eq. 2G-6}$$

Use the following equation when using a 3–D probe.

$$v_{a(i)} = K_p F_2 \sqrt{\frac{\left(P_1 - P_2\right)_i T_{s(i)}}{P_s M_s}}\left(\cos\theta_{y(i)}\right) \quad \text{Eq. 2G-7}$$

12.2.3 Handling multiple measurements at a traverse point. For pressure or temperature devices that take multiple measurements at a traverse point, the multiple measurements (or where applicable, their square roots) may first be averaged and the resulting average values used in the equations above. Alternatively, the individual measurements may be used in the equations above and the resulting calculated values may then be averaged to obtain a single traverse point value. With either approach, all of the individual measurements recorded at a traverse point must be used in calculating the applicable traverse point value.

12.3 Average Near-Axial Velocity in Stack or Duct. Use the reported traverse point near-axial velocity in the following equation.

$$v_{a(avg)} = \frac{\sum_{i=1}^{n} v_{a(i)}}{n} \quad \text{Eq. 2G-8}$$

12.4 Acceptability of Results. The acceptability provisions in section 12.4 of Method 2F apply to 3-D probes used under Method 2G. The following provisions apply to Type S probes. For Type S probes, the test results are acceptable and the calculated value of $v_{a(avg)}$ may be reported as the average near-axial velocity for the test run if the conditions in either section 12.4.1 or 12.4.2 are met.

12.4.1 The average calibration coefficient C_p used in Equation 2G–6 was generated at

nominal velocities of 18.3 and 27.4 m/sec (60 and 90 ft/sec) and the value of $v_{a(avg)}$ calculated using Equation 2G–8 is greater than or equal to 9.1 m/sec (30 ft/sec).

12.4.2 The average calibration coefficient C_p used in Equation 2G–6 was generated at nominal velocities other than 18.3 or 27.4 m/sec (60 or 90 ft/sec) and the value of $v_{a(avg)}$ calculated using Equation 2G–8 is greater than or equal to the lower nominal velocity and less than or equal to the higher nominal velocity used to derive the average C_p.

12.4.3 If the conditions in neither section 12.4.1 nor section 12.4.2 are met, the test results obtained from Equation 2G–8 are not acceptable, and the steps in sections 12.2 and 12.3 must be repeated using an average calibration coefficient C_p that satisfies the conditions in section 12.4.1 or 12.4.2.

12.5 Average Gas Volumetric Flow Rate in Stack or Duct (Wet Basis). Use the following equation to compute the average volumetric flow rate on a wet basis.

$$Q_{sw} = 3{,}600\left(v_{a(avg)}\right)(A)\left(\frac{T_{std}}{T_{s(avg)}}\right)\left(\frac{P_s}{P_{std}}\right) \qquad \text{Eq. 2G-9}$$

12.6 Average Gas Volumetric Flow Rate in Stack or Duct (Dry Basis). Use the following equation to compute the average volumetric flow rate on a dry basis.

$$Q_{sd} = 3{,}600\left(1 - B_{ws}\right)\left(v_{a(avg)}\right)(A)\left(\frac{T_{std}}{T_{s(avg)}}\right)\left(\frac{P_s}{P_{std}}\right) \qquad \text{Eq. 2G-10}$$

13.0 Method Performance. [Reserved]

14.0 Pollution Prevention. [Reserved]

15.0 Waste Management. [Reserved]

16.0 Reporting.

16.1 Field Test Reports. Field test reports shall be submitted to the Agency according to applicable regulatory requirements. Field test reports should, at a minimum, include the following elements.

16.1.1 Description of the source. This should include the name and location of the test site, descriptions of the process tested, a description of the combustion source, an accurate diagram of stack or duct cross-sectional area at the test site showing the dimensions of the stack or duct, the location of the test ports, and traverse point locations and identification numbers or codes. It should also include a description and diagram of the stack or duct layout, showing the distance of the test location from the nearest upstream and downstream disturbances and all structural elements (including breachings, baffles, fans, straighteners, etc.) affecting the flow pattern. If the source and test location descriptions have been previously submitted to the Agency in a document (e.g., a monitoring plan or test plan), referencing the document in lieu of including this information in the field test report is acceptable.

16.1.2 Field test procedures. These should include a description of test equipment and test procedures. Testing conventions, such as traverse point numbering and measurement sequence (e.g., sampling from center to wall, or wall to center), should be clearly stated. Test port identification and directional reference for each test port should be included on the appropriate field test data sheets.

16.1.3 Field test data.

16.1.3.1 Summary of results. This summary should include the dates and times of testing, and the average near-axial gas velocity and the average flue gas volumetric flow results for each run and tested condition.

16.1.3.2 Test data. The following values for each traverse point should be recorded and reported:

(a) Differential pressure at traverse point i (ΔP_i)
(b) Stack or duct temperature at traverse point i ($t_{s(i)}$)
(c) Absolute stack or duct temperature at traverse point i ($T_{s(i)}$)
(d) Yaw angle at traverse point i ($\theta_{y(i)}$)
(e) Stack gas near-axial velocity at traverse point i ($v_{a(i)}$)

16.1.3.3 The following values should be reported once per run:

(a) Water vapor in the gas stream (from Method 4 or alternative), proportion by volume (B_{ws}), measured at the frequency specified in the applicable regulation
(b) Molecular weight of stack or duct gas, dry basis (M_d)
(c) Molecular weight of stack or duct gas, wet basis (M_s)
(d) Stack or duct static pressure (P_g)
(e) Absolute stack or duct pressure (P_s)
(f) Carbon dioxide concentration in the flue gas, dry basis ($\%_d\ CO_2$)
(g) Oxygen concentration in the flue gas, dry basis ($\%_d\ O_2$)
(h) Average near-axial stack or duct gas velocity ($v_{a(avg)}$) across all traverse points
(i) Gas volumetric flow rate corrected to standard conditions, dry or wet basis as required by the applicable regulation (Q_{sd} or Q_{sw})

16.1.3.4 The following should be reported once per complete set of test runs:

(a) Cross-sectional area of stack or duct at the test location (A)
(b) Pitot tube calibration coefficient (C_p)
(c) Measurement system response time (sec)
(d) Barometric pressure at measurement site (P_{bar})

16.1.4 Calibration data. The field test report should include calibration data for all probes and test equipment used in the field test. At a minimum, the probe calibration data reported to the Agency should include the following:

(a) Date of calibration
(b) Probe type
(c) Probe identification number(s) or code(s)
(d) Probe inspection sheets
(e) Pressure measurements and calculations used to obtain calibration coefficients in accordance with section 10.6 of this method
(f) Description and diagram of wind tunnel used for the calibration, including dimensions of cross-sectional area and position and size of the test section
(g) Documentation of wind tunnel qualification tests performed in accordance with section 10.1 of this method

16.1.5 Quality assurance. Specific quality assurance and quality control procedures used during the test should be described.

17.0 Bibliography.

(1) 40 CFR Part 60, Appendix A, Method 1—Sample and velocity traverses for stationary sources.
(2) 40 CFR Part 60, Appendix A, Method 2—Determination of stack gas velocity and volumetric flow rate (Type S pitot tube) .
(3) 40 CFR Part 60, Appendix A, Method 2F—Determination of stack gas velocity and volumetric flow rate with three-dimensional probes.
(4) 40 CFR Part 60, Appendix A, Method 2H—Determination of stack gas velocity taking into account velocity decay near the stack wall.
(5) 40 CFR Part 60, Appendix A, Method 3—Gas analysis for carbon dioxide, oxygen, excess air, and dry molecular weight.
(6) 40 CFR Part 60, Appendix A, Method 3A—Determination of oxygen and carbon dioxide concentrations in emissions from stationary sources (instrumental analyzer procedure).
(7) 40 CFR Part 60, Appendix A, Method 4—Determination of moisture content in stack gases.
(8) Emission Measurement Center (EMC) Approved Alternative Method (ALT–011)

''Alternative Method 2 Thermocouple Calibration Procedure.''
(9) Electric Power Research Institute, Interim Report EPRI TR–106698, ''Flue Gas Flow Rate Measurement Errors,'' June 1996.
(10) Electric Power Research Institute, Final Report EPRI TR–108110, ''Evaluation of Heat Rate Discrepancy from Continuous Emission Monitoring Systems,'' August 1997.
(11) Fossil Energy Research Corporation, Final Report, ''Velocity Probe Tests in Non-axial Flow Fields,'' November 1998, Prepared for the U.S. Environmental Protection Agency.
(12) Fossil Energy Research Corporation, ''Additional Swirl Tunnel Tests: E–DAT and T–DAT Probes,'' February 24, 1999, Technical Memorandum Prepared for U.S. Environmental Protection Agency, P.O. No. 7W–1193–NALX.
(13) Massachusetts Institute of Technology, Report WBWT–TR–1317, ''Calibration of Eight Wind Speed Probes Over a Reynolds Number Range of 46,000 to 725,000 Per Foot, Text and Summary Plots,'' Plus appendices, October 15, 1998, Prepared for The Cadmus Group, Inc.
(14) National Institute of Standards and Technology, Special Publication 250, ''NIST Calibration Services Users Guide 1991,'' Revised October 1991, U.S. Department of Commerce, p. 2.
(15) National Institute of Standards and Technology, 1998, ''Report of Special Test of Air Speed Instrumentation, Four Prandtl Probes, Four S-Type Probes, Four French Probes, Four Modified Kiel Probes,'' Prepared for the U.S. Environmental Protection Agency under IAG #DW13938432–01–0.
(16) National Institute of Standards and Technology, 1998, ''Report of Special Test of Air Speed In-strumentation, Five Autoprobes,'' Prepared for the U.S. Environmental Protection Agency under IAG #DW13938432–01–0.
(17) National Institute of Standards and Technology, 1998, ''Report of Special Test of Air Speed Instrumentation, Eight Spherical Probes,'' Prepared for the U.S. Environmental Protection Agency under IAG #DW13938432–01–0.
(18) National Institute of Standards and Technology, 1998, ''Report of Special Test of Air Speed Instrumentation, Four DAT Probes, '' Prepared for the U.S. Environmental Protection Agency under IAG #DW13938432–01–0.
(19) Norfleet, S.K., ''An Evaluation of Wall Effects on Stack Flow Velocities and Related Overestimation Bias in EPA's Stack Flow Reference Methods,'' EPRI CEMS User's Group Meeting, New Orleans, Louisiana, May 13–15, 1998.
(20) Page, J.J., E.A. Potts, and R.T. Shigehara, ''3–D Pitot Tube Calibration Study,'' EPA Contract No. 68D10009, Work Assignment No. I–121, March 11, 1993.
(21) Shigehara, R.T., W.F. Todd, and W.S. Smith, ''Significance of Errors in Stack Sampling Measurements,'' Presented at the Annual Meeting of the Air Pollution Control Association, St. Louis, Missouri, June 1419, 1970.
(22) The Cadmus Group, Inc., May 1999, ''EPA Flow Reference Method Testing and Analysis: Findings Report,'' EPA/430–R–99–009.
(23) The Cadmus Group, Inc., 1998, ''EPA Flow Reference Method Testing and Analysis: Data Report, Texas Utilities, DeCordova Steam Electric Station, Volume I: Test Description and Appendix A (Data Distribution Package),'' EPA/430–R–98–015a.
(24) The Cadmus Group, Inc., 1998, ''EPA Flow Reference Method Testing and Analysis: Data Report, Texas Utilities, Lake Hubbard Steam Electric Station, Volume I: Test Description and Appendix A (Data Distribution Package),'' EPA/430–R–98–017a.
(25) The Cadmus Group, Inc., 1998, ''EPA Flow Reference Method Testing and Analysis: Data Report, Pennsylvania Electric Co., G.P.U. Genco Homer City Station: Unit 1, Volume I: Test Description and Appendix A (Data Distribution Package),'' EPA/430–R–98–018a.
(26) The Cadmus Group, Inc., 1997, ''EPA Flow Reference Method Testing and Analysis: Wind Tunnel Experimental Results,'' EPA/430–R–97–013.

18.0 Annexes

Annex A, C, and D describe recommended procedures for meeting certain provisions in sections 8.3, 10.4, and 10.5 of this method. Annex B describes procedures to be followed when using the protractor wheel and pointer assembly to measure yaw angles, as provided under section 8.9.1.

18.1 Annex A—Rotational Position Check. The following are recommended procedures that may be used to satisfy the rotational position check requirements of section 8.3 of this method and to determine the angle-measuring device rotational offset (R_{ADO}).

18.1.1 Rotational position check with probe outside stack. Where physical constraints at the sampling location allow full assembly of the probe outside the stack and insertion into the test port, the following procedures should be performed before the start of testing. Two angle-measuring devices that meet the specifications in section 6.2.1 or 6.2.3 are required for the rotational position check. An angle measuring device whose position can be independently adjusted (e.g., by means of a set screw) after being locked into position on the probe sheath shall not be used for this check unless the independent adjustment is set so that the device performs exactly like a device without the capability for independent adjustment. That is, when aligned on the probe such a device must give the same reading as a device that does not have the capability of being independently adjusted. With the fully assembled probe (including probe shaft extensions, if any) secured in a horizontal position, affix one yaw angle-measuring device to the probe sheath and lock it into position on the reference scribe line specified in section 6.1.5.1. Position the second angle-measuring device using the procedure in section 18.1.1.1 or 18.1.1.2.

18.1.1.1 Marking procedure. The procedures in this section should be performed at each location on the fully assembled probe where the yaw angle-measuring device will be mounted during the velocity traverse. Place the second yaw angle-measuring device on the main probe sheath (or extension) at the position where a yaw angle will be measured during the velocity traverse. Adjust the position of the second angle-measuring device until it indicates the same angle (±1°) as the reference device, and affix the second device to the probe sheath (or extension). Record the angles indicated by the two angle-measuring devices on a form similar to table 2G–2. In this position, the second angle-measuring device is considered to be properly positioned for yaw angle measurement. Make a mark, no wider than 1.6 mm (1/16 in.), on the probe sheath (or extension), such that the yaw angle-measuring device can be re-affixed at this same properly aligned position during the velocity traverse.

18.1.1.2 Procedure for probe extensions with scribe lines. If, during a velocity traverse the angle-measuring device will be affixed to a probe extension having a scribe line as specified in section 6.1.5.2, the following procedure may be used to align the extension's scribe line with the reference scribe line instead of marking the extension as described in section 18.1.1.1. Attach the probe extension to the main probe. Align and lock the second angle-measuring device on the probe extension's scribe line. Then, rotate the extension until both measuring devices indicate the same angle (±1°). Lock the extension at this rotational position. Record the angles indicated by the two angle-measuring devices on a form similar to table 2G–2. An angle-measuring device may be aligned at any position on this scribe line during the velocity traverse, if the scribe line meets the alignment specification in section 6.1.5.3.

18.1.1.3 Post-test rotational position check. If the fully assembled probe includes one or more extensions, the following check should be performed immediately after the completion of a velocity traverse. At the discretion of the tester, additional checks may be conducted after completion of testing at any sample port. Without altering the alignment of any of the components of the probe assembly used in the velocity traverse, secure the fully assembled probe in a horizontal position. Affix an angle-measuring device at the reference scribe line specified in section 6.1.5.1. Use the other angle-measuring device to check the angle at each location where the device was checked prior to testing. Record the readings from the two angle-measuring devices.

18.1.2 Rotational position check with probe in stack. This section applies only to probes that, due to physical constraints, cannot be inserted into the test port as fully assembled with all necessary extensions needed to reach the inner-most traverse point(s).

18.1.2.1 Perform the out-of-stack procedure in section 18.1.1 on the main probe and any attached extensions that will be initially inserted into the test port.

18.1.2.2 Use the following procedures to perform additional rotational position check(s) with the probe in the stack, each time a probe extension is added. Two angle-measuring devices are required. The first of

these is the device that was used to measure yaw angles at the preceding traverse point, left in its properly aligned measurement position. The second angle-measuring device is positioned on the added probe extension. Use the applicable procedures in section 18.1.1.1 or 18.1.1.2 to align, adjust, lock, and mark (if necessary) the position of the second angle-measuring device to within ±1° of the first device. Record the readings of the two devices on a form similar to Table 2G–2.

18.1.2.3 The procedure in section 18.1.2.2 should be performed at the first port where measurements are taken. The procedure should be repeated each time a probe extension is re-attached at a subsequent port, unless the probe extensions are designed to be locked into a mechanically fixed rotational position (e.g., through use of interlocking grooves), which can be reproduced from port to port as specified in section 8.3.5.2.

18.2 Annex B—Angle Measurement Protocol for Protractor Wheel and Pointer Device. The following procedure shall be used when a protractor wheel and pointer assembly, such as the one described in section 6.2.2 and illustrated in Figure 2G–5 is used to measure the yaw angle of flow. With each move to a new traverse point, unlock, re-align, and re-lock the probe, angle-pointer collar, and protractor wheel to each other. At each such move, particular attention is required to ensure that the scribe line on the angle pointer collar is either aligned with the reference scribe line on the main probe sheath or is at the rotational offset position established under section 8.3.1. The procedure consists of the following steps:

18.2.1 Affix a protractor wheel to the entry port for the test probe in the stack or duct.

18.2.2 Orient the protractor wheel so that the 0° mark corresponds to the longitudinal axis of the stack or duct. For stacks, vertical ducts, or ports on the side of horizontal ducts, use a digital inclinometer meeting the specifications in section 6.2.1 to locate the 0° orientation. For ports on the top or bottom of horizontal ducts, identify the longitudinal axis at each test port and permanently mark the duct to indicate the 0° orientation. Once the protractor wheel is properly aligned, lock it into position on the test port.

18.2.3 Move the pointer assembly along the probe sheath to the position needed to take measurements at the first traverse point. Align the scribe line on the pointer collar with the reference scribe line or at the rotational offset position established under section 8.3.1. Maintaining this rotational alignment, lock the pointer device onto the probe sheath. Insert the probe into the entry port to the depth needed to take measurements at the first traverse point.

18.2.4 Perform the yaw angle determination as specified in sections 8.9.3 and 8.9.4 and record the angle as shown by the pointer on the protractor wheel. Then, take velocity pressure and temperature measurements in accordance with the procedure in section 8.9.5. Perform the alignment check described in section 8.9.6.

18.2.5 After taking velocity pressure measurements at that traverse point, unlock the probe from the collar and slide the probe through the collar to the depth needed to reach the next traverse point.

18.2.6 Align the scribe line on the pointer collar with the reference scribe line on the main probe or at the rotational offset position established under section 8.3.1. Lock the collar onto the probe.

18.2.7 Repeat the steps in sections 18.2.4 through 18.2.6 at the remaining traverse points accessed from the current stack or duct entry port.

18.2.8 After completing the measurement at the last traverse point accessed from a port, verify that the orientation of the protractor wheel on the test port has not changed over the course of the traverse at that port. For stacks, vertical ducts, or ports on the side of horizontal ducts, use a digital inclinometer meeting the specifications in section 6.2.1 to check the rotational position of the 0° mark on the protractor wheel. For ports on the top or bottom of horizontal ducts, observe the alignment of the angle wheel 0° mark relative to the permanent 0° mark on the duct at that test port. If these observed comparisons exceed ±2° of 0°, all angle and pressure measurements taken at that port since the protractor wheel was last locked into position on the port shall be repeated.

18.2.9 Move to the next stack or duct entry port and repeat the steps in sections 18.2.1 through 18.2.8.

18.3 Annex C—Guideline for Reference Scribe Line Placement. Use of the following guideline is recommended to satisfy the requirements of section 10.4 of this method. The rotational position of the reference scribe line should be either 90° or 180° from the probe's impact pressure port. For Type-S probes, place separate scribe lines, on opposite sides of the probe sheath, if both the A and B sides of the pitot tube are to be used for yaw angle measurements.

18.4 Annex D—Determination of Reference Scribe Line Rotational Offset. The following procedures are recommended for determining the magnitude and sign of a probe's reference scribe line rotational offset, R_{SLO}. Separate procedures are provided for two types of angle-measuring devices: digital inclinometers and protractor wheel and pointer assemblies.

18.4.1 Perform the following procedures on the main probe with all devices that will be attached to the main probe in the field [such as thermocouples, resistance temperature detectors (RTDs), or sampling nozzles] that may affect the flow around the probe head. Probe shaft extensions that do not affect flow around the probe head need not be attached during calibration.

18.4.2 The procedures below assume that the wind tunnel duct used for probe calibration is horizontal and that the flow in the calibration wind tunnel is axial as determined by the axial flow verification check described in section 10.1.2. Angle-measuring devices are assumed to display angles in alternating 0° to 90° and 90° to 0° intervals. If angle-measuring devices with other readout conventions are used or if other calibration wind tunnel duct configurations are used, make the appropriate calculational corrections. For Type-S probes, calibrate the A-side and B-sides separately, using the appropriate scribe line (see section 18.3, above), if both the A and B sides of the pitot tube are to be used for yaw angle determinations.

18.4.2.1 Position the angle-measuring device in accordance with one of the following procedures.

18.4.2.1.1 If using a digital inclinometer, affix the calibrated digital inclinometer to the probe. If the digital inclinometer can be independently adjusted after being locked into position on the probe sheath (e.g., by means of a set screw), the independent adjustment must be set so that the device performs exactly like a device without the capability for independent adjustment. That is, when aligned on the probe the device must give the same readings as a device that does not have the capability of being independently adjusted. Either align it directly on the reference scribe line or on a mark aligned with the scribe line determined according to the procedures in section 18.1.1.1. Maintaining this rotational alignment, lock the digital inclinometer onto the probe sheath.

18.4.2.1.2 If using a protractor wheel and pointer device, orient the protractor wheel on the test port so that the ° mark is aligned with the longitudinal axis of the wind tunnel duct. Maintaining this alignment, lock the wheel into place on the wind tunnel test port. Align the scribe line on the pointer collar with the reference scribe line or with a mark aligned with the reference scribe line, as determined under section 18.1.1.1. Maintaining this rotational alignment, lock the pointer device onto the probe sheath.

18.4.2.2 Zero the pressure-measuring device used for yaw nulling.

18.4.2.3 Insert the probe assembly into the wind tunnel through the entry port, positioning the probe's impact port at the calibration location. Check the responsiveness of the pressure-measuring device to probe rotation, taking corrective action if the response is unacceptable.

18.4.2.4 Ensure that the probe is in a horizontal position using a carpenter's level.

18.4.2.5 Rotate the probe either clockwise or counterclockwise until a yaw null [zero ΔP for a Type S probe or zero (P_2–P_3) for a 3–D probe] is obtained. If using a Type S probe with an attached thermocouple, the direction of the probe rotation shall be such that the thermocouple is located downstream of the probe pressure ports at the yaw-null position.

18.4.2.6 Read and record the value of θ_{null}, the angle indicated by the angle-measuring device at the yaw-null position. Record the angle reading on a form similar to Table 2G–6. Do not associate an algebraic sign with this reading.

18.4.2.7 Determine the magnitude and algebraic sign of the reference scribe line rotational offset, R_{SLO}. The magnitude of R_{SLO} will be equal to either θ_{null} or ($90° - \theta_{null}$), depending on the type of probe being calibrated and the type of angle-measuring device used. (See Table 2G–7 for a summary.) The algebraic sign of R_{SLO} will either be positive if the rotational position of the reference scribe line is clockwise or negative if counterclockwise with respect to the probe's yaw-null position. Figure 2G–10 illustrates how the magnitude and sign of R_{SLO} are determined.

18.4.2.8 Perform the steps in sections 18.3.2.3 through 18.3.2.7 twice at each of the two calibration velocities selected for the probe under section 10.6. Record the values of R_{SLO} in a form similar to Table 2G–6.

18.4.2.9 The average of all R_{SLO} values is the reference scribe line rotational offset for the probe.

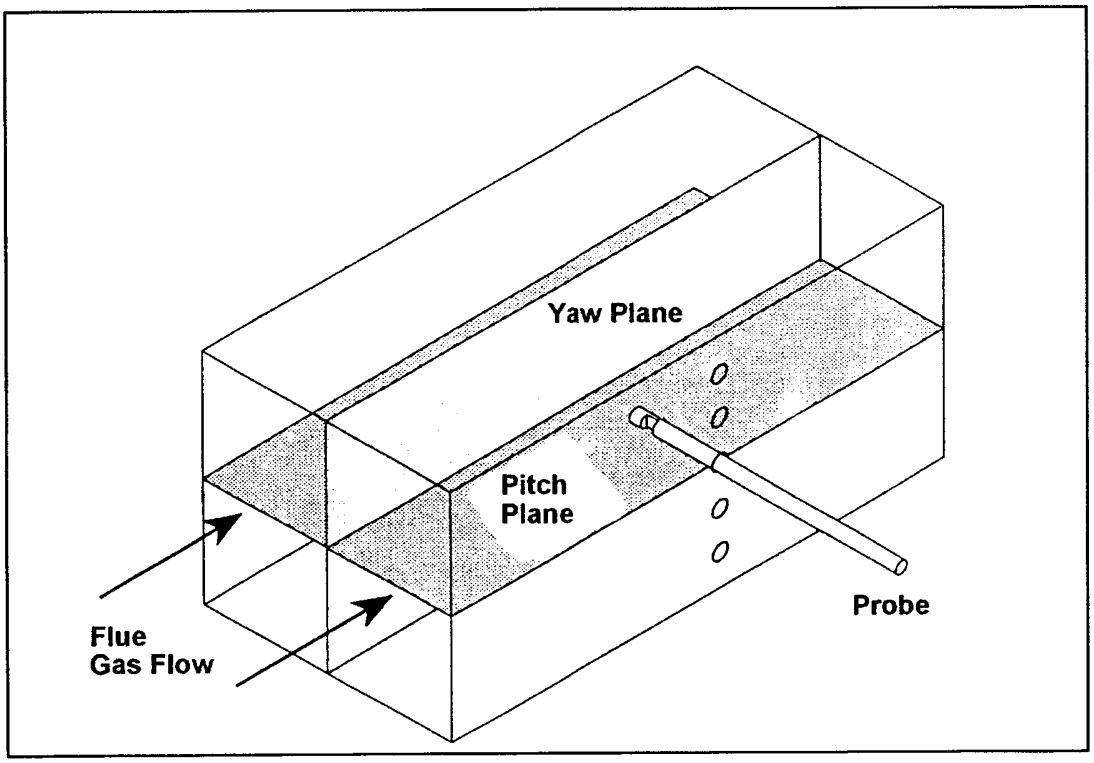

Figure 2G-1. Illustration of yaw and pitch planes in stack or duct.

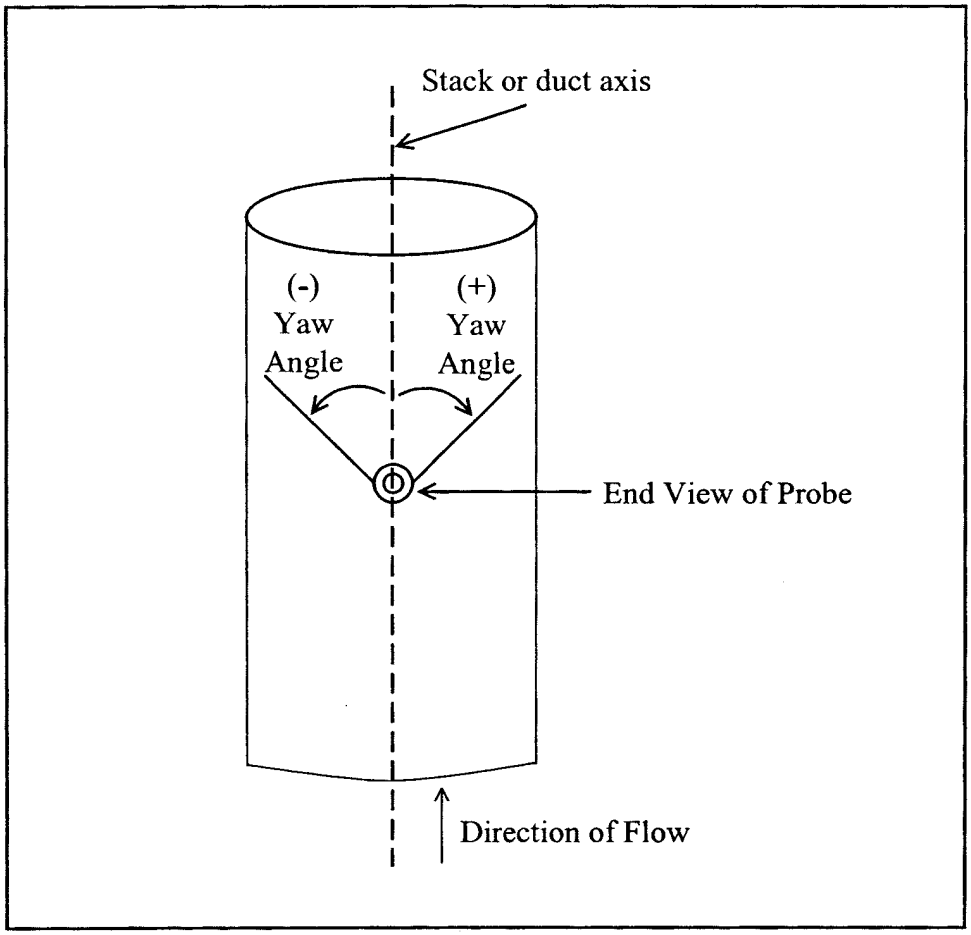

Figure 2G-2. Illustration of probe rotation representing positive and negative yaw angles.

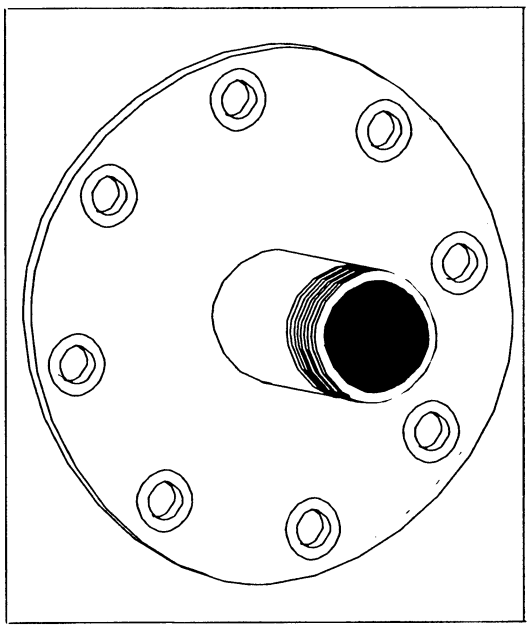

Figure 2G-3. Example bushing sleeve.

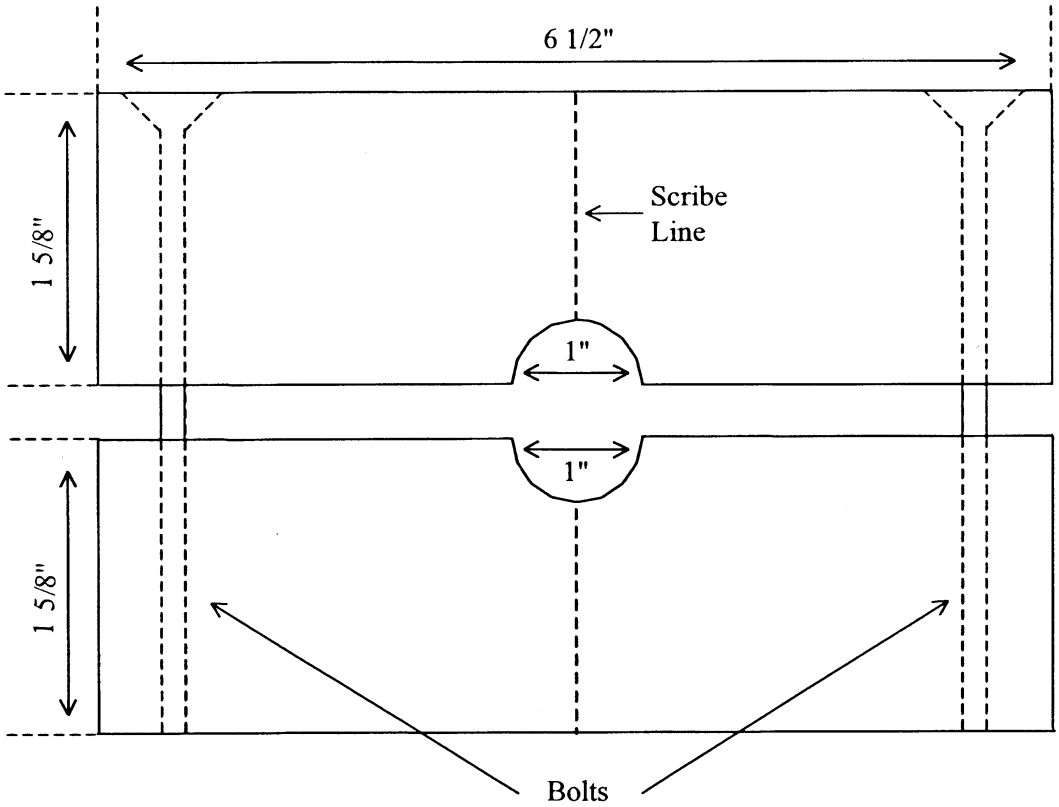

Figure 2G-4. Rotational position collar block.

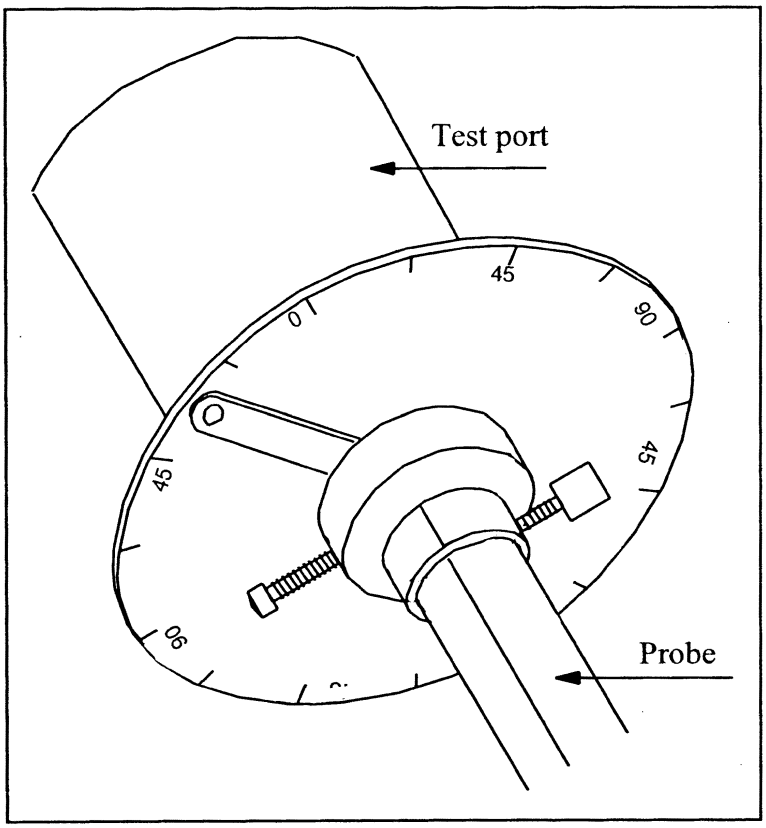

Figure 2G-5. Yaw angle protractor wheel and pointer.

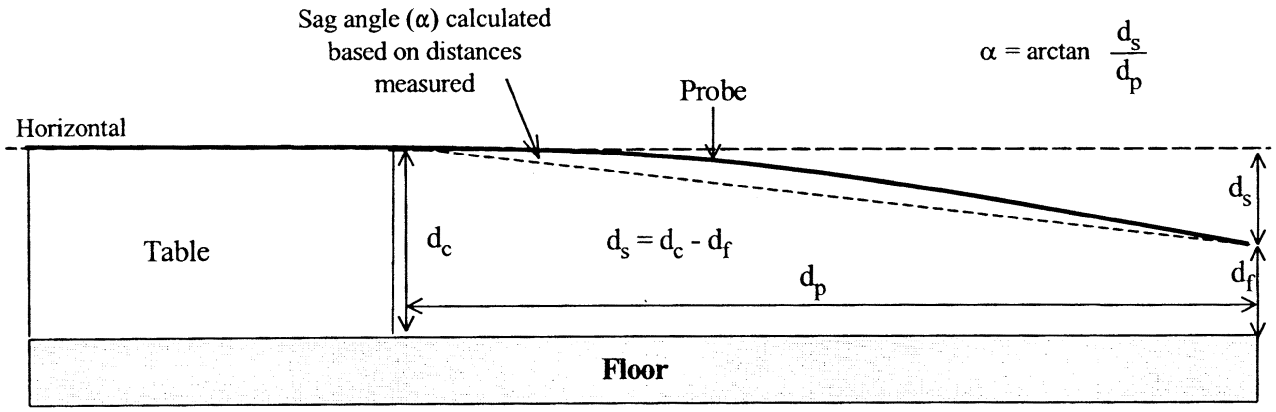

Figure 2G-6. Elements in horizontal straightness test based on trigonometry.

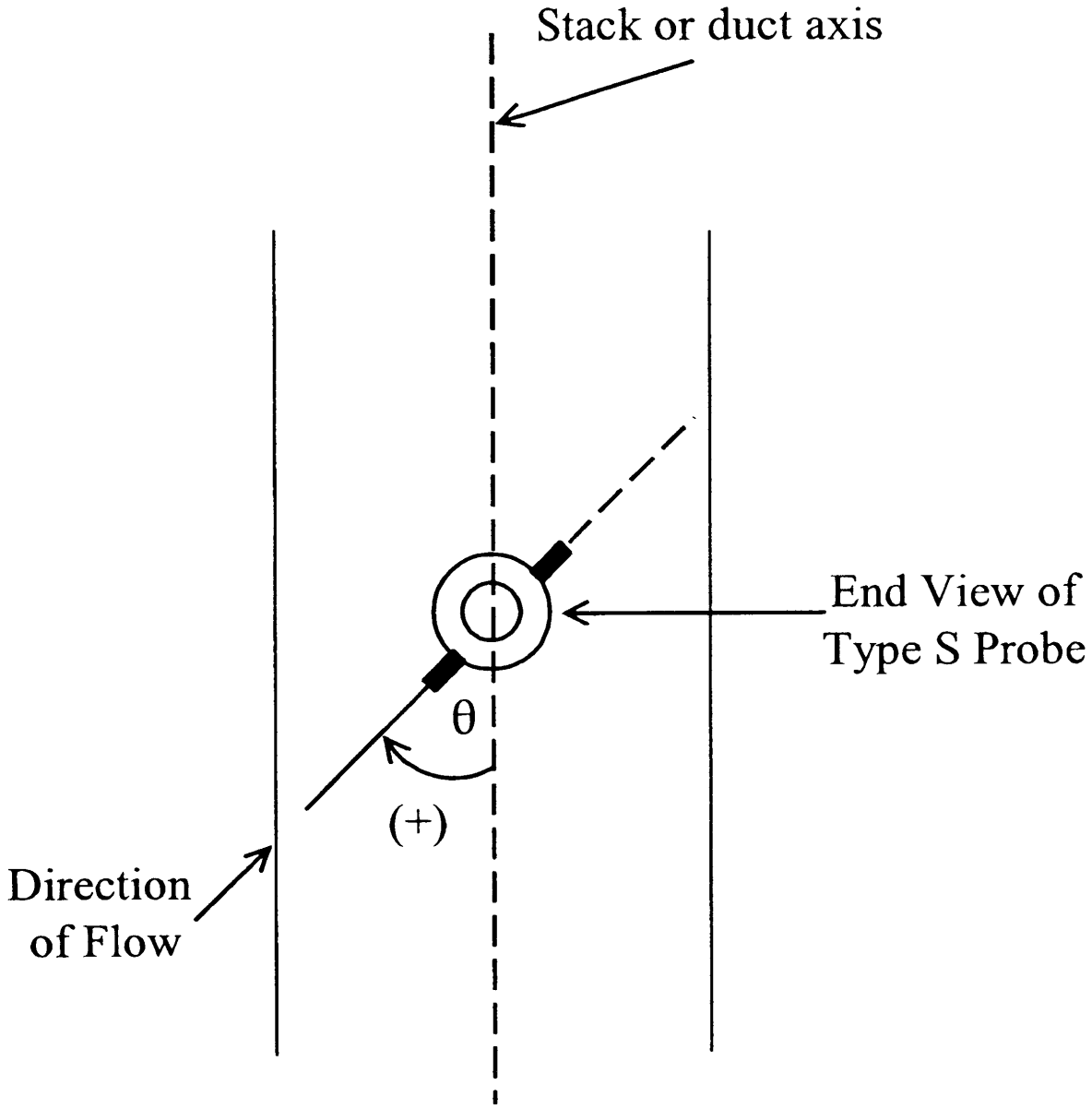

Figure 2G-7. Sign convention for the measured angle (θ) when the probe impact port is pointed directly into the flow. The angle θ is positive when the probe's impact pressure port is oriented in a clockwise rotational position relative to the stack or duct axis, as shown above, and negative for a counter-clockwise orientation.

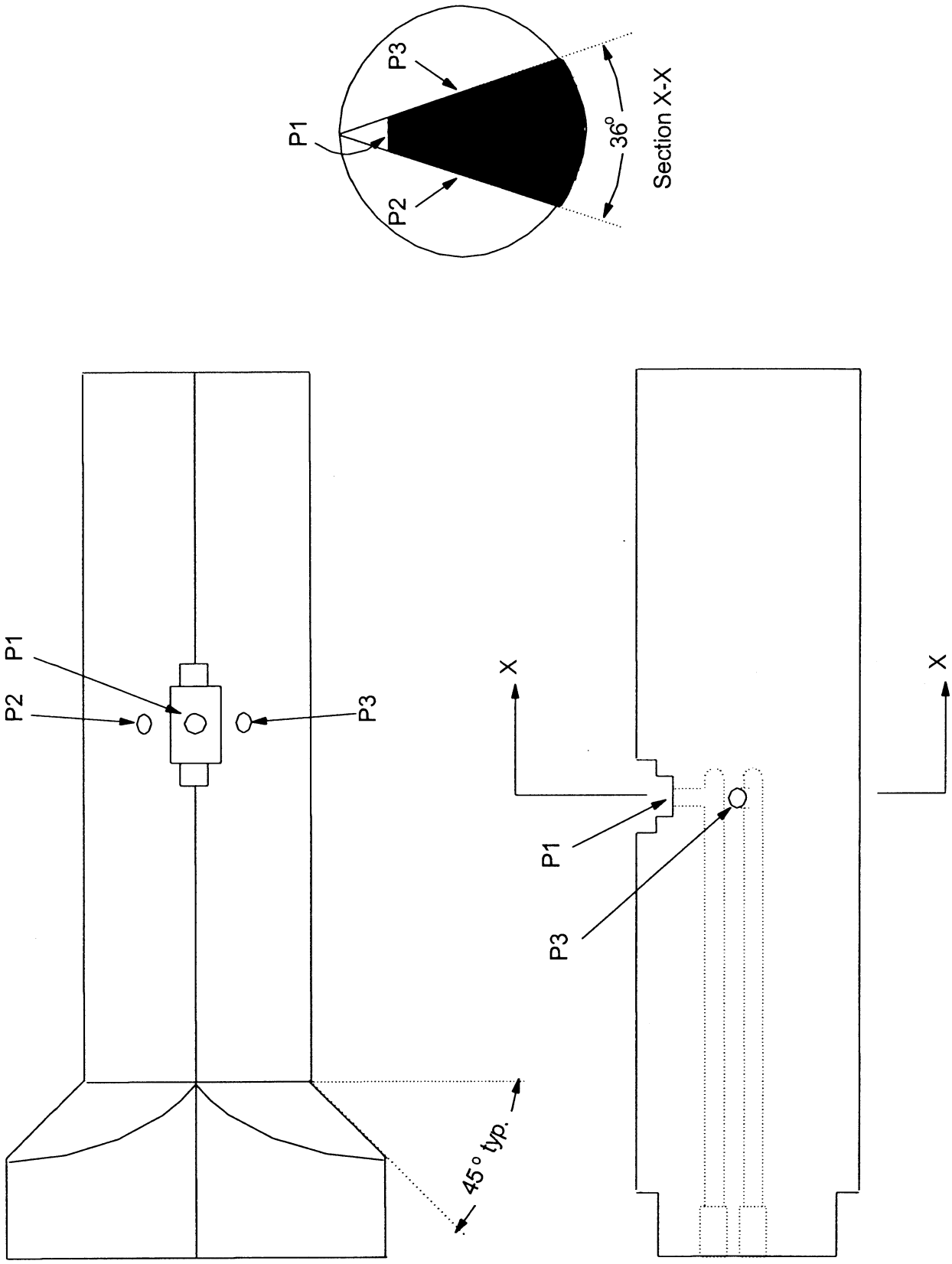

Figure 2G-8. Wedge probe used for axial flow verification.

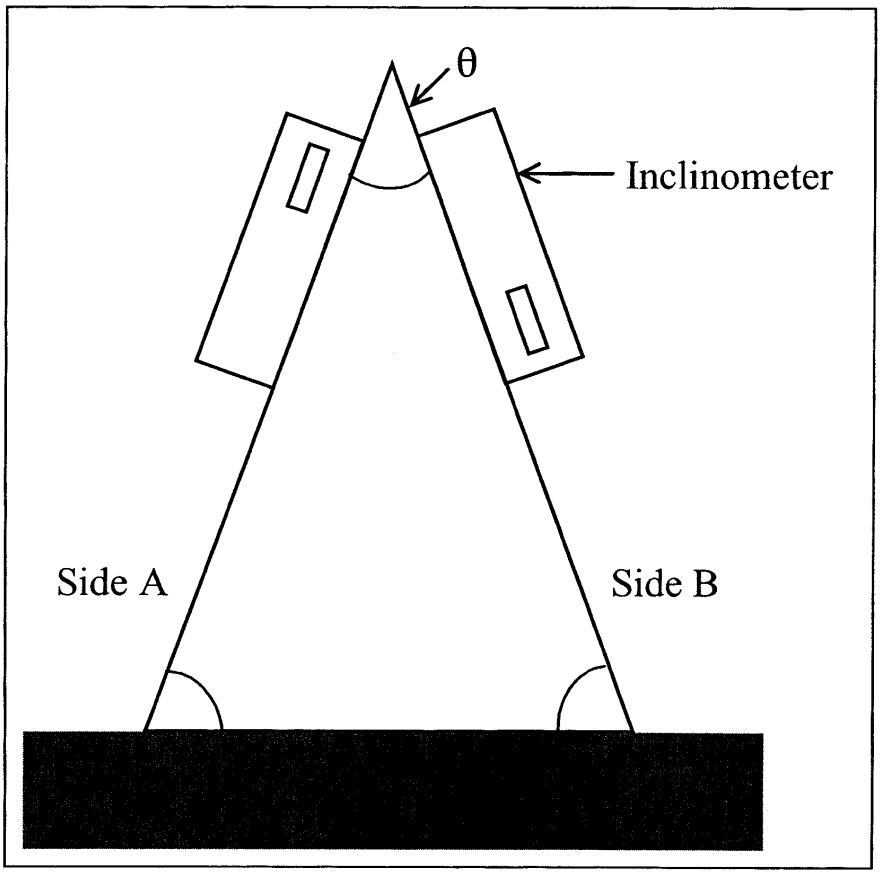

Figure 2G-9. Triangular block used for digital inclinometer calibration.

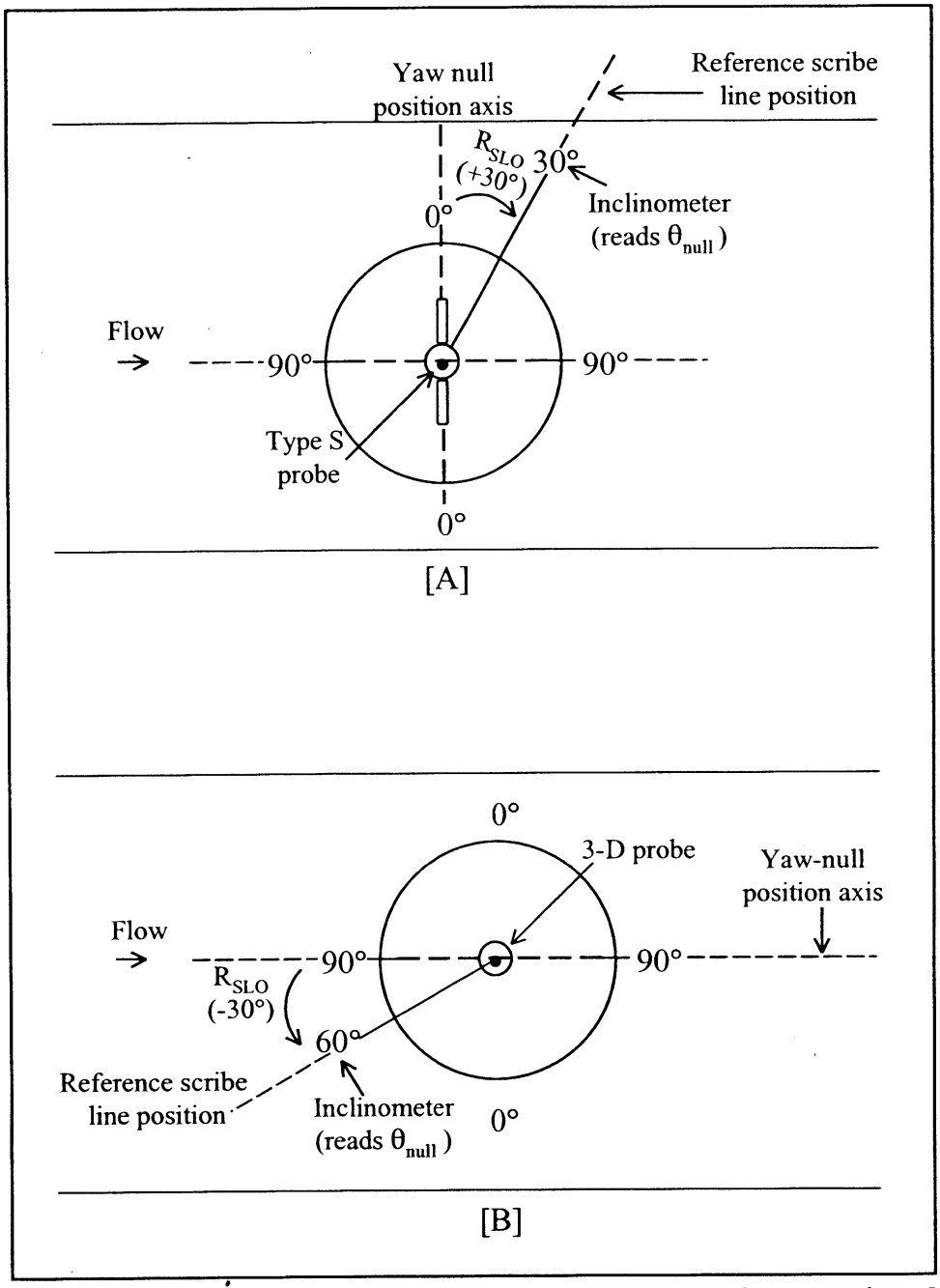

Figure 2G-10. Determination of reference scribe line rotational offset (R_{SLO}) in a horizontal wind tunnel with axial flow for: [A], a Type S probe, and [B], a 3-D probe. In [A] and [B], the probe impact pressure port is aligned with the yaw-null position axis and the inclinometer reads θ_{null}. In [A], the magnitude of R_{SLO} = θ_{null} and the sign is positive (clockwise from yaw-null position axis). In [B], the magnitude of R_{SLO} = 90°-θ_{null} and the sign is negative (counterclockwise from yaw-null position axis).

Table 2G-1. Type S Probe Inspection Sheet

Note: Method 2 provides the criteria for an acceptably constructed Type S pitot tube. However, the procedure for making the necessary measurements is not specified. One approach is given below.

1. Use a vise with parallel and perpendicular faces. Use an angle-measuring device (analog or digital) for this check.
2. Place the pitot tube in the vise, and level the pitot tube horizontally using the angle-measuring device.
3. Place the angle-measuring device as shown below.
4. Measure distance A, which is P_A plus P_B. Method 2 specifies that $P_A = P_B$, but provides no tolerance for this measurement. Because this measurement is very difficult, it is suggested that $P_A = P_B = A/2$.
5. Measure the external tube diameter (D_t) with a micrometer, machinist's rule, or internal caliper.
6. Record all data as shown on the form below.
7. Calculate dimensions w and z as shown below.

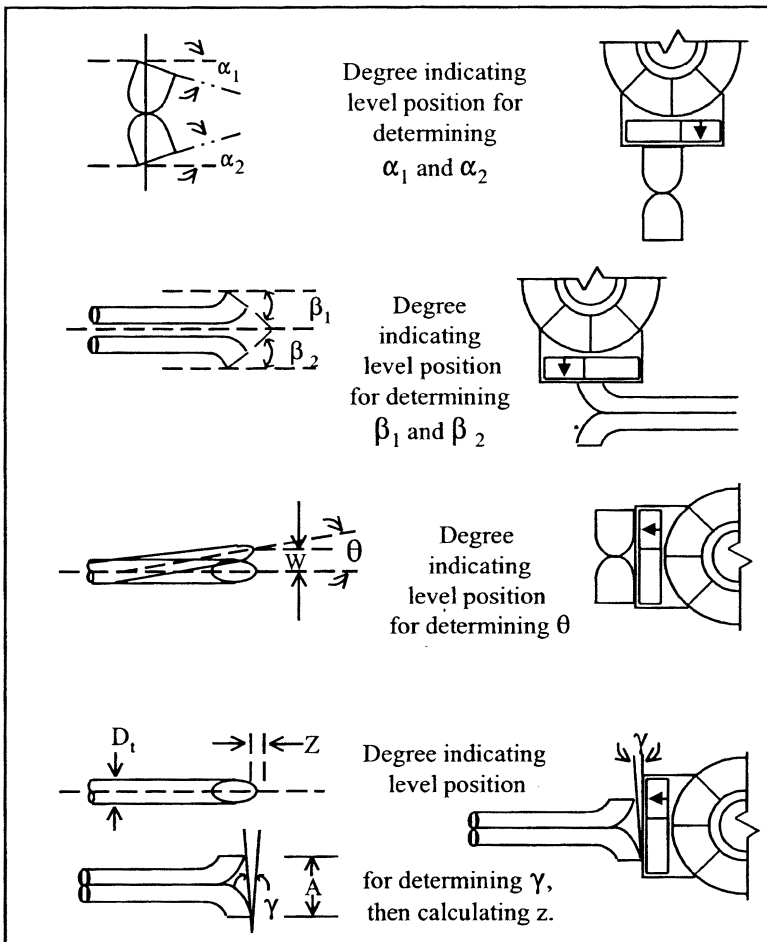

Level and perpendicular?	
Obstruction?	
Damaged?	
α_1 ($-2° \le \alpha_1 \le +2°$)	
α_2 ($-2° \le \alpha_2 \le +2°$)	
β_1 ($-2° \le \beta_1 \le +2°$)	
β_2 ($-2° \le \beta_2 \le +2°$)	
γ	
θ	
$z = A (\tan\gamma)$ [≤ 0.5 mm (0.02 in.)]	
$w = A (\tan\theta)$ [≤ 0.5 mm (0.02 in.)]	
D_t [≥ 9.5 mm (3/8 in.)]	
A	
$A/2D_t$ ($1.05 \le P_A/D_t \le 1.5$) *	
* Recommended dimensions	

QA/QC Check

Completeness_____ Legibility_____ Accuracy_____

Specifications_____ Reasonableness_____

Certification

I certify that the Type S probe ID _____ meets or exceeds all specifications, criteria, and applicable design features.

Certified by:_____ Date:_____

Table 2G-2. Rotational Position Check

Source:_____ Date:_____

Test Location:_____ Tester(s):_____

Probe Type:_____ Affiliation:_____

Probe ID:_____ Fully-Assembled Probe Length in mm (in.):_____

Position	Angle Comparisons		
Distance of 2nd measurement device from probe head impact port in mm (in.)	1st Device Angle measured by device aligned on the reference scribe line, including algebraic sign (degrees)	2nd Device Angle measured by device mounted at each position to be used during testing, including algebraic sign (degrees)	R_{ADO} Difference between readings by 1st and 2nd angle-measuring devices (degrees)[a]
(Col. A)	(Col. B)	(Col. C)	(Col. C - Col. B)

[a] The algebraic sign must be consistent with section 8.3.2.

Specifications: For the pre-test rotational position check, the value of R_{ADO} at each location along the probe shaft must be determined to within ±1°. In the post-test check, R_{ADO} at each location must remain within ±2° of the value obtained in the pre-test check.

Table 2G-3. Example EPA Method 2G Field Data Form

Source: _____ Date: _____

Source Location: _____ Test Personnel: _____

Measurement Location: _____ Probe Type: _____

Run ID:	
Start Time:	
End Time:	
Pitot Tube ID:	
Pitot Tube Coefficient (C_p):	
Pressure Gauge ID:	
Pressure Gauge Readability:	in. H_2O
Temperature Gauge ID:	
Measurement System Response Time	sec.

Stack Diameter:		
Stack Area:		
Barometric Pressure (P_{bar}):	in. Hg	
Static Pressure (P_g):	in. H_2O	
R_{SLO}		
R_{ADO}		
	Pre-test	Post-test
Pitot Tube Condition: Damage Noted?		
Leak Check Performed?		

Clock Time	Traverse Point	Yaw Angle, including algebraic sign (degrees)	Differential Pressure (ΔP)	Stack or Duct Gas Temperature (° F)

Table 2G-4. Wind Tunnel Velocity Pressure Cross-Check

Wind Tunnel Facility: _____
Date: _____
Wind Tunnel Temperature: _____
Barometric Pressure: _____
Test Point Locations: _____
Lowest Test Velocity in m/sec (ft/sec): _____
Highest Test Velocity in m/sec (ft/sec): _____

Port		Rep.	Velocity Pressure (ΔP_{std}) @ Lowest Test Velocity	Velocity Pressure (ΔP_{std}) @ Highest Test Velocity
Calibration Pitot Tube Location		1		
		2		
		3		
		Average		
Calibration Location Test Points *	1	1		
		2		
		3		
		Average		
		% Difference **		
	2	1		
		2		
		3		
		Average		
		% Difference **		
	..	1		
		2		
		3		
		Average		
		% Difference **		

* Measurements must be taken at all points in the calibration location as specified in section 10.1.1

** Percent Difference = $\frac{(\textit{Calibration Location Test Point Avg} - \textit{Cal. Pitot Tube Location Avg})}{\textit{Cal. Pitot Tube Location Avg}} \times 100\%$

Specification: At each velocity setting, the average velocity pressure obtained at the calibration location shall be within ±2 percent or 0.01 in. H_2O, whichever is less restrictive, of the average velocity pressure obtained at the fixed calibration pitot tube location.

Table 2G-5. Wind Tunnel Axial Flow Verification

Wind Tunnel Facility: _____
Date: _____
Wind Tunnel Temperature: _____
Barometric Pressure: _____
Probe Type/I.D. Used To Conduct Check: _____
Test Point Locations: _____
Lowest Test Velocity in m/sec (ft/sec): _____
Highest Test Velocity in m/sec (ft/sec): _____

Port		@ Lowest Test Velocity		@ Highest Test Velocity	
		Yaw Angle * (degrees)	Pitch Angle * (degrees)	Yaw Angle * (degrees)	Pitch Angle * (degrees)
Calibration Location Test Points **	1				
	2				
	3				
	..				
Calibration Pitot Tube Location					

* When following the procedures in section 10.1.2.1, both the yaw and pitch angles are obtained from the same port. When following the procedures in section 10.1.2.2, the yaw angle is obtained using the port for the tested probe, and the pitch angle is obtained using the port for verification of axial flow.

** Yaw and pitch angle measurements must be taken at all points that define the calibration location (as per the requirements in section 10.1.1)

Specification: At each velocity setting, each measured yaw and pitch angle shall be within ±3° of 0° in accordance with the requirements in section 10.1.2.

Table 2G-6. Yaw Angle Calibration

Probe Type: _____ **Tester(s):** _____

Probe ID: _____ **Affiliation:** _____

Test Location: _____ **Date:** _____

	Repetition 1		Repetition 2	
Nominal Velocity Setting in m/sec (ft/sec)	**θ_{null} (degrees)**	**R_{SLO} (degrees)***	**θ_{null} (degrees)**	**R_{SLO} (degrees)***
_____	_____	_____	_____	_____
_____	_____	_____	_____	_____
_____	_____	_____	_____	_____
_____	_____	_____	_____	_____
_____	_____	_____	_____	_____
_____	_____	_____	_____	_____
_____	_____	_____	_____	_____
_____	_____	_____	_____	_____
_____	_____	_____	_____	_____

Average of all recorded R_{SLO} values: _____

* Include magnitude and algebraic sign in accordance with section 10.5.6.

Table 2G-7. Determining the Magnitude of Reference Scribe Line Offset

Probe/Angle-Measuring Device	Magnitude of R_{SLO}
Type S probe with inclinometer	θ_{null}
Type S probe with protractor wheel and pointer	$90° - \theta_{null}$
3-D probe with inclinometer	$90° - \theta_{null}$
3-D probe with protractor wheel and pointer	θ_{null}

Table 2G-8. Probe Calibration for Method 2G

Wind Tunnel Facility: _____

Wind Tunnel Location: _____

Probe Type: _____

Probe ID: _____

Probe Calibration Date: _____

Test Point Location: _____

Ambient Temperature (°F): _____

Barometric Pressure (P_{bar}): _____

Repetition	Low Velocity Setting (ft/sec)	Calibration Pitot		Tested Probe		Calculated C_p or F_2
		ΔP_{std} (in. H_2O)	Temp. (°F)	ΔP or P_1-P_2 (in. H_2O)	Yaw Angle (°)	
1						
2						
3						
					Average ($C_{p(avg\text{-}low)}$) =	

Repetition	High Velocity Setting (ft/sec)	Calibration Pitot		Tested Probe		Calculated C_p or F_2
		ΔP_{std} (in. H_2O)	Temp. (°F)	ΔP or P_1-P_2 (in. H_2O)	Yaw Angle (°)	
1						
2						
3						
					Average ($C_{p(avg\text{-}high)}$) =	

$$\%\ \text{Difference} = \frac{C_{p(avg-low)} - C_{p(avg-high)}}{C_{p(avg-low)}} \times 100\% = _____\%$$

Note: (1) The percent difference between the low and high velocity setting C_p values shall be within ±3 percent.

(2) If calibrating a 3-D probe for this method, the pitch angle setting must be 0°.

BILLING CODE 6560–50–C

Method 2H—Determination of Stack Gas Velocity Taking Into Account Velocity Decay Near the Stack Wall

1.0 Scope and Application

1.1 This method is applicable in conjunction with Methods 2, 2F, and 2G (40 CFR Part 60, Appendix A) to account for velocity decay near the wall in circular stacks and ducts.

1.2 This method is not applicable for testing stacks and ducts less than 3.3 ft (1.0 m) in diameter.

1.3 Data Quality Objectives. Adherence to the requirements of this method will enhance the quality of the data obtained from air pollutant sampling methods.

2.0 Summary of Method

2.1 A wall effects adjustment factor is determined. It is used to adjust the average stack gas velocity obtained under Method 2, 2F, or 2G of this appendix to take into account velocity decay near the stack or duct wall.

2.2 The method contains two possible procedures: a calculational approach which derives an adjustment factor from velocity measurements and a default procedure which assigns a generic adjustment factor based on the construction of the stack or duct.

2.2.1 The calculational procedure derives a wall effects adjustment factor from velocity measurements taken using Method 2, 2F, or 2G at 16 (or more) traverse points specified under Method 1 of this appendix and a total of eight (or more) wall effects traverse points specified under this method. The calculational procedure based on velocity measurements is not applicable for horizontal circular ducts where build-up of particulate matter or other material in the bottom of the duct is present.

2.2.2 A default wall effects adjustment factor of 0.9900 for brick and mortar stacks and 0.9950 for all other types of stacks and ducts may be used without taking wall effects measurements in a stack or duct.

2.3 When the calculational procedure is conducted as part of a relative accuracy test audit (RATA) or other multiple-run test procedure, the wall effects adjustment factor derived from a single traverse (i.e., single RATA run) may be applied to all runs of the same RATA without repeating the wall effects measurements. Alternatively, wall effects adjustment factors may be derived for several traverses and an average wall effects adjustment factor applied to all runs of the same RATA.

3.0 Definitions.

3.1 Complete wall effects traverse means a traverse in which measurements are taken at d_{rem} (see section 3.3) and at 1-in. intervals in each of the four Method 1 equal-area sectors closest to the wall, beginning not farther than 4 in. (10.2 cm) from the wall and extending either (1) across the entire width of the Method 1 equal-area sector or (2) for stacks or ducts where this width exceeds 12 in. (30.5 cm) (i.e., stacks or ducts greater than or equal to 15.6 ft [4.8 m] in diameter), to a distance of not less than 12 in. (30.5 cm) from the wall. Note: Because this method specifies that measurements must be taken at whole number multiples of 1 in. from a stack or duct wall, for clarity numerical quantities in this method are expressed in English units followed by metric units in parentheses. To enhance readability, hyphenated terms such as ''1-in. intervals'' or ''1-in. incremented,'' are expressed in English units only.

3.2 d_{last}. Depending on context, d_{last} means either (1) the distance from the wall of the last 1-in. incremented wall effects traverse point or (2) the traverse point located at that distance (see Figure 2H–2).

3.3 d_{rem}. Depending on context, d_{rem} means either (1) the distance from the wall of the centroid of the area between d_{last} and the interior edge of the Method 1 equal-area sector closest to the wall or (2) the traverse point located at that distance (see Figure 2H–2).

3.4 *''May,'' ''Must,'' ''Shall,'' ''Should,''* and the imperative form of verbs.

3.4.1 *''May''* is used to indicate that a provision of this method is optional.

3.4.2 *''Must,'' ''Shall,''* and the imperative form of verbs (such as ''record'' or ''enter'') are used to indicate that a provision of this method is mandatory.

3.4.3 *''Should''* is used to indicate that a provision of this method is not mandatory but is highly recommended as good practice.

3.5 *Method 1* refers to 40 CFR part 60, appendix A, ''Method 1—Sample and velocity traverses for stationary sources.''

3.6 *Method 1 exterior equal-area sector and Method 1 equal-area sector closest to the wall* mean any one of the four equal-area sectors that are closest to the wall for a circular stack or duct laid out in accordance with section 2.3.1 of Method 1 (see Figure 2H–1).

3.7 *Method 1 interior equal-area sector* means any of the equal-area sectors other than the Method 1 exterior equal-area sectors (as defined in section 3.6) for a circular stack or duct laid out in accordance with section 2.3.1 of Method 1 (see Figure 2H–1).

3.8 *Method 1 traverse point and Method 1 equal-area traverse point* mean a traverse point located at the centroid of an equal-area sector of a circular stack laid out in accordance with section 2.3.1 of Method 1.

3.9 *Method 2* refers to 40 CFR part 60, appendix A, ''Method 2—Determination of stack gas velocity and volumetric flow rate (Type S pitot tube).''

3.10 *Method 2F* refers to 40 CFR part 60, appendix A, ''Method 2F—Determination of stack gas velocity and volumetric flow rate with three-dimensional probes.''

3.11 *Method 2G* refers to 40 CFR part 60, appendix A, ''Method 2G—Determination of stack gas velocity and volumetric flow rate with two-dimensional probes.''

3.12 *1-in. incremented wall effects traverse point* means any of the wall effects traverse points that are located at 1-in. intervals, i.e., traverse points d_1 through d_{last} (see Figure 2H–2).

3.13 *Partial wall effects traverse* means a traverse in which measurements are taken at fewer than the number of traverse points required for a ''complete wall effects traverse'' (as defined in section 3.1), but are taken at a minimum of two traverse points in each Method 1 equal-area sector closest to the wall, as specified in section 8.2.2.

3.14 *Relative accuracy test audit (RATA)* is a field test procedure performed in a stack or duct in which a series of concurrent measurements of the same stack gas stream is taken by a reference method and an installed monitoring system. A RATA usually consists of series of 9 to 12 sets of such concurrent measurements, each of which is referred to as a RATA run. In a volumetric flow RATA, each reference method run consists of a complete traverse of the stack or duct.

3.15 *Wall effects-unadjusted average velocity* means the average stack gas velocity, not accounting for velocity decay near the wall, as determined in accordance with Method 2, 2F, or 2G for a Method 1 traverse consisting of 16 or more points.

3.16 *Wall effects-adjusted average velocity* means the average stack gas velocity, taking into account velocity decay near the wall, as calculated from measurements at 16 or more Method 1 traverse points and at the additional wall effects traverse points specified in this method.

3.17 *Wall effects traverse point* means a traverse point located in accordance with sections 8.2.2 or 8.2.3 of this method.

4.0 Interferences. [Reserved]

5.0 Safety

5.1 This method may involve hazardous materials, operations, and equipment. This method does not purport to address all of the health and safety considerations associated with its use. It is the responsibility of the user of this method to establish appropriate health and safety practices and to determine the applicability of occupational health and safety regulatory requirements prior to performing this method.

6.0 Equipment and Supplies

6.1 The provisions pertaining to equipment and supplies in the method that is used to take the traverse point measurements (i.e., Method 2, 2F, or 2G) are applicable under this method.

7.0 Reagents and Standards. [Reserved]

8.0 Sample Collection and Analysis

8.1 Default Wall Effects Adjustment Factors. A default wall effects adjustment factor of 0.9900 for brick and mortar stacks and 0.9950 for all other types of stacks and ducts may be used without conducting the following procedures.

8.2 Traverse Point Locations. Determine the location of the Method 1 traverse points in accordance with section 8.2.1 and the location of the traverse points for either a partial wall effects traverse in accordance with section 8.2.2 or a complete wall effects traverse in accordance with section 8.2.3.

8.2.1 Method 1 equal-area traverse point locations. Determine the location of the Method 1 equal-area traverse points for a traverse consisting of 16 or more points using Table 1–2 (Location of Traverse Points in Circular Stacks) of Method 1.

8.2.2 Partial wall effects traverse. For a partial wall effects traverse, measurements must be taken at a minimum of the following two wall effects traverse point locations in all four Method 1 equal-area sectors closest to the wall: (1) 1 in. (2.5 cm) from the wall (except as provided in section 8.2.2.1) and (2)

d_{rem}, as determined using Equation 2H–1 or 2H–2 (see section 8.2.2.2).

8.2.2.1 If the probe cannot be positioned at 1 in. (2.5 cm) from the wall (e.g., because of insufficient room to withdraw the probe shaft) or if velocity pressure cannot be detected at 1 in. (2.5 cm) from the wall (for any reason other than build-up of particulate matter in the bottom of a duct), take measurements at the 1-in. incremented wall effects traverse point closest to the wall where the probe can be positioned and velocity pressure can be detected.

8.2.2.2 Calculate the distance of d_{rem} from the wall to within ±¼ in. (6.4 mm) using Equation 2H–1 or Equation 2H–2 (for a 16-point traverse).

$$d_{last} \le d_b \qquad \text{Eq. 2H-3}$$

Where:

r = the stack or duct radius determined from direct measurement of the stack or duct diameter in accordance with section 8.6 of Method 2F or Method 2G, in. (cm);

p = the number of Method 1 equal-area traverse points on a diameter, $p \ge 8$ (e.g., for a 16-point traverse, $p = 8$); d_{last} and d_{rem} are defined in sections 3.2 and 3.3 respectively, in. (cm).

For a 16-point Method 1 traverse, Equation 2H–1 becomes:

$$d_{rem} = r - \sqrt{\frac{7}{8}r^2 - rd_{last} + \frac{1}{2}d_{last}^2} \qquad \text{Eq. 2H-2}$$

8.2.2.3 Measurements may be taken at any number of additional wall effects traverse points, with the following provisions.

(a) d_{last} must not be closer to the center of the stack or duct than the distance of the interior edge (boundary), d_b, of the Method 1 equal-area sector closest to the wall (see Figure 2H–2 or 2H–3). That is,

$$d_b = r\left(1 - \sqrt{1 - \frac{2}{p}}\right) \qquad \text{Eq. 2H-4}$$

Where:

$$d_b = r\left(1 - \sqrt{1 - \frac{2}{p}}\right) \qquad \text{Eq. 2H-4}$$

Table 2H–1 shows d_b as a function of the stack or duct radius, r, for traverses ranging from 16 to 48 points (i.e., for values of p ranging from 8 to 24).

(b) Each point must be located at a distance that is a whole number (e.g., 1, 2, 3) multiple of 1 in. (2.5 cm).

(c) Points do not have to be located at consecutive 1-in. intervals. That is, one or more 1-in. incremented points may be skipped. For example, it would be acceptable for points to be located at 1 in. (2.5 cm), 3 in. (7.6 cm), 5 in. (12.7 cm), d_{last}, and d_{rem}; or at 1 in. (2.5 cm), 2 in. (5.1 cm), 4 in. (10.2 cm), 7 in. (17.8 cm), d_{last}, and d_{rem}. Follow the instructions in section 8.7.1.2 of this method for recording results for wall effects traverse points that are skipped. It should be noted that the full extent of velocity decay may not be accounted for if measurements are not taken at all 1-in. incremented points close to the wall.

8.2.3 Complete wall effects traverse. For a complete wall effects traverse, measurements must be taken at the following points in all four Method 1 equal-area sectors closest to the wall.

(a) The 1-in. incremented wall effects traverse point closest to the wall where the probe can be positioned and velocity can be detected, but no farther than 4 in. (10.2 cm) from the wall.

(b) Every subsequent 1-in. incremented wall effects traverse point out to the interior edge of the Method 1 equal-area sector or to 12 in. (30.5 cm) from the wall, whichever comes first. Note: In stacks or ducts with diameters greater than 15.6 ft (4.8 m) the interior edge of the Method 1 equal-area sector is farther from the wall than 12 in. (30.5 cm).

(c) d_{rem}, as determined using Equation 2H–1 or 2H–2 (as applicable). Note: For a complete traverse of a stack or duct with a diameter less than 16.5 ft (5.0 m), the distance between d_{rem} and d_{last} is less than or equal to ½ in. (12.7 mm). As discussed in section 8.2.4.2, when the distance between d_{rem} and d_{last} is less than or equal to ½ in. (12.7 mm), the velocity measured at d_{last} may be used for d_{rem}. Thus, it is not necessary to calculate the distance of d_{rem} or to take measurements at d_{rem} when conducting a complete traverse of a stack or duct with a diameter less than 16.5 ft (5.0 m).

8.2.4 Special considerations. The following special considerations apply when the distance between traverse points is less than or equal to ½ in. (12.7 mm).

8.2.4.1 A wall effects traverse point and the Method 1 traverse point. If the distance between a wall effects traverse point and the Method 1 traverse point is less than or equal to ½ in. (12.7 mm), taking measurements at both points is allowed but not required or recommended; if measurements are taken at only one point, take the measurements at the point that is farther from the wall and use the velocity obtained at that point as the value for both points (see sections 8.2.3 and 9.2 for related requirements).

8.2.4.2 d_{rem} and d_{last}. If the distance between d_{rem} and d_{last} is less than or equal to ½ in. (12.7 mm), taking measurements at d_{rem} is allowed but not required or recommended; if measurements are not taken at d_{rem}, the measured velocity value at d_{last} must be used as the value for both d_{last} and d_{rem}.

8.3 Traverse Point Sampling Order and Probe Selection. Determine the sampling order of the Method 1 and wall effects traverse points and select the appropriate probe for the measurements, taking into account the following considerations.

8.3.1 Traverse points on any radius may be sampled in either direction (i.e., from the wall toward the center of the stack or duct, or vice versa).

8.3.2 To reduce the likelihood of velocity variations during the time of the traverse and the attendant potential impact on the wall effects-adjusted and unadjusted average velocities, the following provisions of this method shall be met.

8.3.2.1 Each complete set of Method 1 and wall effects traverse points accessed from the same port shall be sampled without interruption. Unless traverses are performed simultaneously in all ports using separate probes at each port, this provision disallows first sampling all Method 1 points at all ports and then sampling all the wall effects points.

8.3.2.2 The entire integrated Method 1 and wall effects traverse across all test ports shall be as short as practicable, consistent with the measurement system response time (see section 8.4.1.1) and sampling (see section 8.4.1.2) provisions of this method.

8.3.3 It is recommended but not required that in each Method 1 equal-area sector closest to the wall, the Method 1 equal-area traverse point should be sampled in sequence between the adjacent wall effects traverse points. For example, for the traverse point configuration shown in Figure 2H–2, it is recommended that the Method 1 equal-area traverse point be sampled between d_{last} and d_{rem}. In this example, if the traverse is conducted from the wall toward the center of the stack or duct, it is recommended that measurements be taken at points in the following order: d_1, d_2, d_{last}, the Method 1 traverse point, d_{rem}, and then at the traverse points in the three Method 1 interior equal-area sectors.

8.3.4 The same type of probe must be used to take measurements at all Method 1 and wall effects traverse points. However, different copies of the same type of probe may be used at different ports (e.g., Type S probe 1 at port A, Type S probe 2 at port B)

or at different traverse points accessed from a particular port (e.g., Type S probe 1 for Method 1 interior traverse points accessed from port A, Type S probe 2 for wall effects traverse points and the Method 1 exterior traverse point accessed from port A). The identification number of the probe used to obtain measurements at each traverse point must be recorded.

8.4 Measurements at Method 1 and Wall Effects Traverse Points. Conduct measurements at Method 1 and wall effects traverse points in accordance with Method 2, 2F, or 2G and in accordance with the provisions of the following subsections (some of which are included in Methods 2F and 2G but not in Method 2), which are particularly important for wall effects testing.

8.4.1 Probe residence time at wall effects traverse points. Due to the steep temperature and pressure gradients that can occur close to the wall, it is very important for the probe residence time (i.e., the total time spent at a traverse point) to be long enough to ensure collection of representative temperature and pressure measurements. The provisions of Methods 2F and 2G in the following subsections shall be observed.

8.4.1.1 System response time. Determine the response time of each probe measurement system by inserting and positioning the ''cold'' probe (at ambient temperature and pressure) at any Method 1 traverse point. Read and record the probe differential pressure, temperature, and elapsed time at 15-second intervals until stable readings for both pressure and temperature are achieved. The response time is the longer of these two elapsed times. Record the response time.

8.4.1.2 Sampling. At the start of testing in each port (i.e., after a probe has been inserted into the stack gas stream), allow at least the response time to elapse before beginning to take measurements at the first traverse point accessed from that port. Provided that the probe is not removed from the stack gas stream, measurements may be taken at subsequent traverse points accessed from the same test port without waiting again for the response time to elapse.

8.4.2 Temperature measurement for wall effects traverse points. Either (1) take temperature measurements at each wall effects traverse point in accordance with the applicable provisions of Method 2, 2F, or 2G; or (2) use the temperature measurement at the Method 1 traverse point closest to the wall as the temperature measurement for all the wall effects traverse points in the corresponding equal-area sector.

8.4.3 Non-detectable velocity pressure at wall effects traverse points. If the probe cannot be positioned at a wall effects traverse point or if no velocity pressure can be detected at a wall effects point, measurements shall be taken at the first subsequent wall effects traverse point farther from the wall where velocity can be detected. Follow the instructions in section 8.7.1.2 of this method for recording results for wall effects traverse points where velocity pressure cannot be detected. It should be noted that the full extent of velocity decay may not be accounted for if measurements are not taken at the 1-in. incremented wall effects traverse points closest to the wall.

8.5 Data Recording. For each wall effects and Method 1 traverse point where measurements are taken, record all pressure, temperature, and attendant measurements prescribed in section 3 of Method 2 or section 8.0 of Method 2F or 2G, as applicable.

8.6 Point Velocity Calculation. For each wall effects and Method 1 traverse point, calculate the point velocity value (v_i) in accordance with sections 12.1 and 12.2 of Method 2F for tests using Method 2F and in accordance with sections 12.1 and 12.2 of Method 2G for tests using Method 2 and Method 2G. (Note that the term (v_i) in this method corresponds to the term ($v_{a(i)}$) in Methods 2F and 2G.) When the equations in the indicated sections of Method 2G are used in deriving point velocity values for Method 2 tests, set the value of the yaw angles appearing in the equations to 0°.

8.7 Tabulating Calculated Point Velocity Values for Wall Effects Traverse Points. Enter the following values in a hardcopy or electronic form similar to Form 2H–1 (for 16-point Method 1 traverses) or Form 2H–2 (for Method 1 traverses consisting of more than 16 points). A separate form must be completed for each of the four Method 1 equal-area sectors that are closest to the wall.

(a) Port ID (e.g., A, B, C, or D)
(b) Probe type
(c) Probe ID
(d) Stack or duct diameter in ft (m) (determined in accordance with section 8.6 of Method 2F or Method 2G)
(e) Stack or duct radius in in. (cm)
(f) Distance from the wall of wall effects traverse points at 1-in. intervals, in ascending order starting with 1 in. (2.5 cm) (column A of Form 2H–1 or 2H–2)
(g) Point velocity values (v_d) for 1-in. incremented traverse points (see section 8.7.1), including d_{last} (see section 8.7.2)
(h) Point velocity value (v_{drem}) at d_{rem} (see section 8.7.3).

8.7.1 Point velocity values at wall effects traverse points other than d_{last}. For every 1-in. incremented wall effects traverse point other than d_{last}, enter in column B of Form 2H–1 or 2H–2 either the velocity measured at the point (see section 8.7.1.1) or the velocity measured at the first subsequent traverse point farther from the wall (see section 8.7.1.2). A velocity value must be entered in column B of Form 2H–1 or 2H–2 for every 1-in. incremented traverse point from d_1 (representing the wall effects traverse point 1 in. [2.5 cm] from the wall) to d_{last}.

8.7.1.1 For wall effects traverse points where the probe can be positioned and velocity pressure can be detected, enter the value obtained in accordance with section 8.6.

8.7.1.2 For wall effects traverse points that were skipped [see section 8.2.2.3(c)] and for points where the probe cannot be positioned or where no velocity pressure can be detected, enter the value obtained at the first subsequent traverse point farther from the wall where velocity pressure was detected and measured and follow the entered value with a ''flag,'' such as the notation ''NM,'' to indicate that ''no measurements'' were actually taken at this point.

8.7.2 Point velocity value at d_{last}. For d_{last}, enter in column B of Form 2H–1 or 2H–2 the measured value obtained in accordance with section 8.6.

8.7.3 Point velocity value (v_{drem}) at d_{rem}. Enter the point velocity value obtained at d_{rem} in column G of row 4a in Form 2H–1 or 2H–2. If the distance between d_{rem} and d_{last} is less than or equal to ½ in. (12.7 mm), the measured velocity value at d_{last} may be used as the value at d_{rem} (see section 8.2.4.2).

9.0 Quality Control.

9.1 Particulate Matter Build-up in Horizontal Ducts. Wall effects testing of horizontal circular ducts should be conducted only if build-up of particulate matter or other material in the bottom of the duct is not present.

9.2 Verifying Traverse Point Distances. In taking measurements at wall effects traverse points, it is very important for the probe impact pressure port to be positioned as close as practicable to the traverse point locations in the gas stream. For this reason, before beginning wall effects testing, it is important to calculate and record the traverse point positions that will be marked on each probe for each port, taking into account the distance that each port nipple (or probe mounting flange for automated probes) extends out of the stack and any extension of the port nipple (or mounting flange) into the gas stream. To ensure that traverse point positions are properly identified, the following procedures should be performed on each probe used.

9.2.1 Manual probes. Mark the probe insertion distance of the wall effects and Method 1 traverse points on the probe sheath so that when a mark is aligned with the outside face of the stack port, the probe impact port is located at the calculated distance of the traverse point from the stack inside wall. The use of different colored marks is recommended for designating the wall effects and Method 1 traverse points. Before the first use of each probe, check to ensure that the distance of each mark from the center of the probe impact pressure port agrees with the previously calculated traverse point positions to within ±¼ in. (6.4 mm).

9.2.2 Automated probe systems. For automated probe systems that mechanically position the probe head at prescribed traverse point positions, activate the system with the probe assemblies removed from the test ports and sequentially extend the probes to the programmed location of each wall effects traverse point and the Method 1 traverse points. Measure the distance between the center of the probe impact pressure port and the inside of the probe assembly mounting flange for each traverse point. The measured distances must agree with the previously calculated traverse point positions to within ±¼ in. (6.4 mm).

9.3 Probe Installation. Properly sealing the port area is particularly important in taking measurements at wall effects traverse points. For testing involving manual probes, the area between the probe sheath and the port should be sealed with a tightly fitting flexible seal made of an appropriate material such as heavy cloth so that leakage is minimized. For automated probe systems, the probe assembly mounting flange area should be checked to verify that there is no leakage.

9.4 Velocity Stability. This method should be performed only when the average

gas velocity in the stack or duct is relatively constant over the duration of the test. If the average gas velocity changes significantly during the course of a wall effects test, the test results should be discarded.

10.0 Calibration

10.1 The calibration coefficient(s) or curves obtained under Method 2, 2F, or 2G and used to perform the Method 1 traverse are applicable under this method.

11.0 Analytical Procedure

11.1 Sample collection and analysis are concurrent for this method (see section 8).

12.0 Data Analysis and Calculations

12.1 The following calculations shall be performed to obtain a wall effects adjustment factor (*WAF*) from (1) the wall effects-unadjusted average velocity (v_{avg}), (2) the replacement velocity ($\hat{v}e_j$) for each of the four Method 1 sectors closest to the wall, and (3) the average stack gas velocity that accounts for velocity decay near the wall ($\hat{v}_{avg}$).

12.2 Nomenclature. The following terms are listed in the order in which they appear in Equations 2H–5 through 2H–21.

v_{avg}=the average stack gas velocity, unadjusted for wall effects, actual ft/sec (m/sec);

vi_i=stack gas point velocity value at Method 1 interior equal-area sectors, actual ft/sec (m/sec);

ve_j=stack gas point velocity value, unadjusted for wall effects, at Method 1 exterior equal-area sectors, actual ft/sec (m/sec);

i=index of Method 1 interior equal-area traverse points;

j=index of Method 1 exterior equal-area traverse points;

n=total number of traverse points in the Method 1 traverse;

$vdec_d$=the wall effects decay velocity for a sub-sector located between the traverse points at distances $d-1$ (in metric units, $d-2.5$) and *d* from the wall, actual ft/sec (m/sec);

v_d=the measured stack gas velocity at distance *d* from the wall, actual ft/sec (m/sec); Note: v_0=0;

d=the distance of a 1-in. incremented wall effects traverse point from the wall, for traverse points d_1 through d_{last}, in. (cm);

A_d=the cross-sectional area of a sub-sector located between the traverse points at distances $d-1$ (in metric units, $d-2.5$) and *d* from the wall, in.^{2} (cm^2) (e.g., sub-sector A_2 shown in Figures 2H–3 and 2H–4);

r=the stack or duct radius, in. (cm);

Q_d=the stack gas volumetric flow rate for a sub-sector located between the traverse points at distances $d-1$ (in metric units, $d-2.5$) and *d* from the wall, actual ft-in.^{2}/sec (m-cm^2/sec);

$Q_{d,\rightarrow d\lambda\alpha\sigma\tau}$=the total stack gas volumetric flow rate for all sub-sectors located between the wall and d_{last}, actual ft-in.^{2}/sec (m-cm^2/sec);

d_{last}=the distance from the wall of the last 1-in. incremented wall effects traverse point, in. (cm);

A_{drem}=the cross-sectional area of the sub-sector located between d_{last} and the interior edge of the Method 1 equal-area sector closest to the wall, in.^{2} (cm^2) (see Figure 2H–4);

p=the number of Method 1 traverse points per diameter, $p \geq 8$ (e.g., for a 16-point traverse, p=8);

d_{rem}=the distance from the wall of the centroid of the area between d_{last} and the interior edge of the Method 1 equal-area sector closest to the wall, in. (cm);

Q_{drem}=the total stack gas volumetric flow rate for the sub-sector located between d_{last} and the interior edge of the Method 1 equal-area sector closest to the wall, actual ft-in.^{2}/sec (m-cm^2/sec);

v_{drem}=the measured stack gas velocity at distance d_{rem} from the wall, actual ft/sec (m/sec);

Q_T=the total stack gas volumetric flow rate for the Method 1 equal-area sector closest to the wall, actual ft-in.^{2}/sec (m-cm^2/sec);

$\hat{v}_{ej}$=the replacement stack gas velocity for the Method 1 equal-area sector closest to the wall, i.e., the stack gas point velocity value, adjusted for wall effects, for the jth Method 1 equal-area sector closest to the wall, actual ft/sec (m/sec);

$\hat{v}_{avg}$=the average stack gas velocity that accounts for velocity decay near the wall, actual ft/sec (m/sec);

WAF=the wall effects adjustment factor derived from v_{avg} and $\hat{v}_{avg}$ for a single traverse, dimensionless;

$\hat{v}_{final}$=the final wall effects-adjusted average stack gas velocity that replaces the unadjusted average stack gas velocity obtained using Method 2, 2F, or 2G for a field test consisting of a single traverse, actual ft/sec (m/sec);

WAF=the wall effects adjustment factor that is applied to the average velocity, unadjusted for wall effects, in order to obtain the final wall effects-adjusted stack gas velocity, $\hat{v}_{final}$ or, $\hat{v}_{final(k)}$, dimensionless;

$\hat{v}_{final(k)}$=the final wall effects-adjusted average stack gas velocity that replaces the unadjusted average stack gas velocity obtained using Method 2, 2F, or 2G on run *k* of a RATA or other multiple-run field test procedure, actual ft/sec (m/sec);

$\hat{v}_{avg(k)}$=the average stack gas velocity, obtained on run *k* of a RATA or other multiple-run procedure, unadjusted for velocity decay near the wall, actual ft/sec (m/sec);

k=index of runs in a RATA or other multiple-run procedure.

12.3 Calculate the average stack gas velocity that does not account for velocity decay near the wall (v_{avg}) using Equation 2H–5.

$$v_{avg} = \frac{\left(\sum_{i=1}^{n-4} vi_i + \sum_{j=1}^{4} ve_j\right)}{n} \qquad \text{Eq. 2H-5}$$

(Note that v_{avg} in Equation 2H–5 is the same as $v_{(a)avg}$ in Equations 2F–9 and 2G–8 in Methods 2F and 2G, respectively.)

For a 16-point traverse, Equation 2H–5 may be written as follows:

$$v_{avg} = \frac{\left(\sum_{i=1}^{12} vi_i + \sum_{j=1}^{4} ve_j\right)}{16} \qquad \text{Eq. 2H-6}$$

12.4 Calculate the replacement velocity, $\hat{v}_{ej}$, for each of the four Method 1 equal-area sectors closest to the wall using the procedures described in sections 12.4.1 through 12.4.8. Forms 2H–1 and 2H–2 provide sample tables that may be used in either hardcopy or spreadsheet format to perform the calculations described in sections 12.4.1 through 12.4.8. Forms 2H–3 and 2H–4 provide examples of Form 2H–1 filled in for partial and complete wall effects traverses.

12.4.1 Calculate the average velocity (designated the ''decay velocity,'' $vdec_d$) for each sub-sector located between the wall and d_{last} (see Figure 2H–3) using Equation 2H–7.

$$vdec_d = \frac{v_{d-1} + v_d}{2} \qquad \text{Eq. 2H-7}$$

For each line in column A of Form 2H–1 or 2H–2 that contains a value of d, enter the corresponding calculated value of $vdec_d$ in column C.

12.4.2 Calculate the cross-sectional area between the wall and the first 1-in. incremented wall effects traverse point and between successive 1-in. incremented wall effects traverse points, from the wall to d_{last} (see Figure 2H–3), using Equation 2H–8.

$$A_d = \frac{1}{4}\pi(r-d+1)^2 - \frac{1}{4}\pi(r-d)^2 \qquad \text{Eq. 2H-8}$$

For each line in column A of Form 2H–1 or 2H–2 that contains a value of d, enter the value of the expression $\frac{1}{4}\pi(r-d+1)^2$ in column D, the value of the expression $\frac{1}{4}\pi(r-d)^2$ in column E, and the value of A_d in column F. Note that Equation 2H–8 is designed for use only with English units (in.). If metric units (cm) are used, the first term, $\frac{1}{4}\pi(r-d+1)^2$, must be changed to $\frac{1}{4}\pi(r-d+2.5)^2$. This change must also be made in column D of Form 2H–1 or 2H–2.

12.4.3 Calculate the volumetric flow through each cross-sectional area derived in section 12.4.2 by multiplying the values of $vdec_d$, derived according to section 12.4.1, by the cross-sectional areas derived in section 12.4.2 using Equation 2H–9.

$$Q_d = vdec_d \times A_d \qquad \text{Eq. 2H-9}$$

For each line in column A of Form 2H–1 or 2H–2 that contains a value of *d*, *enter the corresponding calculated value of* Q_d in column G.

12.4.4 Calculate the total volumetric flow through all sub-sectors located between the wall and d_{last}, using Equation 2H–10.

$$Q_{d_1-d_{last}} = \sum_{d=1}^{d_{last}} Q_d \qquad \text{Eq. 2H-10}$$

Enter the calculated value of $Q_{d1 \rightarrow dlast}$ in line 3 of column G of Form 2H–1 or 2H–2.

12.4.5 Calculate the cross-sectional area of the sub-sector located between d_{last} and the interior edge of the Method 1 equal-area sector (e.g., sub-sector A_{drem} shown in Figures 2H–3 and 2H–4) using Equation 2H–11.

$$A_{drem} = \frac{1}{4}\pi\left(r - d_{last}\right)^2 - \frac{p-2}{4p}\pi(r)^2 \qquad \text{Eq. 2H-11}$$

For a 16-point traverse (eight points per diameter), Equation 2H–11 may be written as follows:

$$A_{drem} = \frac{1}{4}\pi\left(r - d_{last}\right)^2 - \frac{3}{16}\pi(r)^2 \qquad \text{Eq. 2H-12}$$

Enter the calculated value of A_{drem} in line 4b of column G of Form 2H–1 or 2H–2.

12.4.6 Calculate the volumetric flow for the sub-sector located between d_{last} and the interior edge of the Method 1 equal-area sector, using Equation 2H–13.

$$Q_{drem} = v_{drem} \times A_{drem} \qquad \text{Eq. 2H-13}$$

In Equation 2H–13, μ_{drem} is either (1) the measured velocity value at d_{rem} or (2) the measured velocity at d_{last}, if the distance between d_{drem} and d_{last} is less than or equal to ½ in. (12.7 mm) and no velocity measurement is taken at d_{rem} (see section 8.2.4.2). Enter the calculated value of Q_{drem} in line 4c of column G of Form 2H–1 or 2H–2.

12.4.7 Calculate the total volumetric flow for the Method 1 equal-area sector closest to the wall, using Equation 2H–14.

$$Q_T = Q_{d_1 \rightarrow d_{last}} + Q_{drem} \qquad \text{Eq. 2H-14}$$

Enter the calculated value of Q_T in line 5a of column G of Form 2H–1 or 2H–2.

12.4.8 Calculate the wall effects-adjusted replacement velocity value for the Method 1 equal-area sector closest to the wall, using Equation 2H–15.

$$\hat{v}e_j = \frac{Q_T}{\frac{1}{2p}\pi(r)^2} \qquad \text{Eq. 2H-15}$$

For a 16-point traverse (eight points per diameter), Equation 2H–15 may be written as follows:

$$\hat{v}e_j = \frac{Q_T}{\frac{1}{16}\pi(r)^2} \qquad \text{Eq. 2H-16}$$

Enter the calculated value of $\hat{v}e_j$ in line 5b of column G of Form 2H–1 or 2H–2.

12.5 Calculate the wall effects-adjusted average velocity,, by replacing the four values of μ_{avg} shown in Equation 2H–5 with the four wall effects-adjusted replacement velocity values, $\hat{\mu}e$, calculated according to section 12.4.8, using Equation 2H–17.

$$\hat{v}_{avg} = \frac{\left(\sum_{i=1}^{n-4} vi_i + \sum_{j=1}^{4} \hat{v}e_j\right)}{n} \qquad \text{Eq. 2H-17}$$

For a 16-point traverse, Equation 2H–17 may be written as follows:

$$\hat{v}_{avg} = \frac{\left(\sum_{i=1}^{12} vi_i + \sum_{j=1}^{4} \hat{v}e_j\right)}{16} \qquad \text{Eq. 2H-18}$$

12.6 Calculate the wall effects adjustment factor, WAF, using Equation 2H–19.

$$WAF = \frac{\hat{v}_{avg}}{v_{avg}} \qquad \text{Eq. 2H-19}$$

12.6.1 Partial wall effects traverse. If a partial wall effects traverse (see section 8.2.2) is conducted, the value obtained from Equation 2H–19 is acceptable and may be reported as the wall effects adjustment factor provided that the value is greater than or equal to 0.9800. If the value is less than 0.9800, it shall not be used and a wall effects adjustment factor of 0.9800 may be used instead.

12.6.2 Complete wall effects traverse. If a complete wall effects traverse (see section 8.2.3) is conducted, the value obtained from Equation 2H–19 is acceptable and may be reported as the wall effects adjustment factor provided that the value is greater than or equal to 0.9700. If the value is less than 0.9700, it shall not be used and a wall effects adjustment factor of 0.9700 may be used instead. If the wall effects adjustment factor for a particular stack or duct is less than 0.9700, the tester may (1) repeat the wall effects test, taking measurements at more Method 1 traverse points and (2) recalculate the wall effects adjustment factor from these measurements, in an attempt to obtain a wall effects adjustment factor that meets the 0.9700 specification and completely characterizes the wall effects.

12.7 Applying a Wall Effects Adjustment Factor. A default wall effects adjustment factor, as specified in section 8.1, or a calculated wall effects adjustment factor meeting the requirements of section 12.6.1 or 12.6.2 may be used to adjust the average stack gas velocity obtained using Methods 2, 2F, or 2G to take into account velocity decay near the wall of circular stacks or ducts. Default wall effects adjustment factors specified in section 8.1 and calculated wall effects adjustment factors that meet the requirements of section 12.6.1 and 12.6.2 are summarized in Table 2H–2.

12.7.1 Single-run tests. Calculate the final wall effects-adjusted average stack gas velocity for field tests consisting of a single traverse using Equation 2H–20.

$$\hat{v}_{final} = \overline{WAF} \times v_{avg} \qquad \text{Eq. 2H-20}$$

The wall effects adjustment factor, WAF, shown in Equation 2H–20, may be (1) a default wall effects adjustment factor, as specified in section 8.1, or (2) a calculated adjustment factor that meets the specifications in sections 12.6.1 or 12.6.2. If a calculated adjustment factor is used in Equation 2H–20, the factor must have been obtained during the same traverse in which μ_{avg} was obtained.

12.7.2 RATA or other multiple run test procedure. Calculate the final wall effects-adjusted average stack gas velocity for any run *k* of a RATA or other multiple-run procedure using Equation 2H–21.

$$\hat{v}_{final(k)} = \overline{WAF} \times v_{avg(k)} \qquad \text{Eq. 2H-21}$$

The wall effects adjustment factor, $\overline{WAF}$, shown in Equation 2H–21 may be (1) a default wall effects adjustment factor, as specified in section 8.1; (2) a calculated adjustment factor (meeting the specifications in sections 12.6.1 or 12.6.2) obtained from any single run of the RATA that includes run *k*; or (3) the arithmetic average of more than one WAF (each meeting the specifications in sections 12.6.1 or 12.6.2) obtained through wall effects testing conducted during several runs of the RATA that includes run *k*. If wall effects adjustment factors (meeting the specifications in sections 12.6.1 or 12.6.2) are determined for more than one RATA run, the arithmetic average of all of the resulting calculated wall effects adjustment factors must be used as the value of *WAF* and applied to all runs of that RATA. If a calculated, not a default, wall effects adjustment factor is used in Equation 2H–21, the average velocity unadjusted for wall effects, $\mu_{avg(k)}$, must be obtained from runs in which the number of Method 1 traverse

points sampled does not exceed the number of Method 1 traverse points in the runs used to derive the wall effects adjustment factor, WAF, shown in Equation 2H–21.

12.8 Calculating Volumetric Flow Using Final Wall Effects-Adjusted Average Velocity Value. To obtain a stack gas flow rate that accounts for velocity decay near the wall of circular stacks or ducts, replace μ_s in Equation 2–10 in Method 2, or $\mu_{a(avg)}$ a in Equations 2F–10 and 2F–11 in Method 2F, or $\mu_{a(avg)}$ in Equations 2G–9 and 2G–10 in Method 2G with one of the following.

12.8.1 For single-run test procedures, use the final wall effects-adjusted average stack gas velocity, $\mu_{final,}$ calculated according to Equation 2H–20.

12.8.2 For RATA and other multiple run test procedures, use the final wall effects-adjusted average stack gas velocity, $\mu_{final(k),}$ calculated according to Equation 2H–21.

13.0 Method Performance. [Reserved]

414.0 Pollution Prevention. [Reserved]

15.0 Waste Management. [Reserved]

16.0 Reporting

16.1 Field Test Reports. Field test reports shall be submitted to the Agency according to the applicable regulatory requirements. When Method 2H is performed in conjunction with Method 2, 2F, or 2G to derive a wall effects adjustment factor, a single consolidated Method 2H/2F (or 2H/2G) field test report should be prepared. At a minimum, the consolidated field test report should contain (1) all of the general information, and data for Method 1 points, specified in section 16.0 of Method 2F (when Method 2H is used in conjunction with Method 2F) or section 16.0 of Method 2G (when Method 2H is used in conjunction with Method 2 or 2G) and (2) the additional general information, and data for Method 1 points and wall effects points, specified in this section (some of which are included in section 16.0 of Methods 2F and 2G and are repeated in this section to ensure complete reporting for wall effects testing).

16.1.1 Description of the source and site. The field test report should include the descriptive information specified in section 16.1.1 of Method 2F (when using Method 2F) or 2G (when using either Method 2 or 2G). It should also include a description of the stack or duct's construction material along with the diagram showing the dimensions of the stack or duct at the test port elevation prescribed in Methods 2F and 2G. The diagram should indicate the location of all wall effects traverse points where measurements were taken as well as the Method 1 traverse points. The diagram should provide a unique identification number for each wall effects and Method 1 traverse point, its distance from the wall, and its location relative to the probe entry ports.

16.1.2 Field test forms. The field test report should include a copy of Form 2H–1, 2H–2, or an equivalent for each Method 1 exterior equal-area sector.

16.1.3 Field test data. The field test report should include the following data for the Method 1 and wall effects traverse.

16.1.3.1 Data for each traverse point. The field test report should include the values specified in section 16.1.3.2 of Method 2F (when using Method 2F) or 2G (when using either Method 2 or 2G) for each Method 1 and wall effects traverse point. The provisions of section 8.4.2 of Method 2H apply to the temperature measurements reported for wall effects traverse points. For each wall effects and Method 1 traverse point, the following values should also be included in the field test report.

(a) Traverse point identification number for each Method 1 and wall effects traverse point.

(b) Probe type.

(c) Probe identification number.

(d) Probe velocity calibration coefficient (i.e., C_p when Method 2 or 2G is used; F_2 when Method 2F is used).

For each Method 1 traverse point in an exterior equal-area sector, the following additional value should be included.

(e) Calculated replacement velocity, $\hat{v}e_j$, accounting for wall effects.

16.1.3.2 Data for each run. The values specified in section 16.1.3.3 of Method 2F (when using Method 2F) or 2G (when using either Method 2 or 2G) should be included in the field test report once for each run. The provisions of section 12.8 of Method 2H apply for calculating the reported gas volumetric flow rate. In addition, the following Method 2H run values should also be included in the field test report.

(a) Average velocity for run, accounting for wall effects, $\hat{v}_{avg}$.

(b) Wall effects adjustment factor derived from a test run, WAF.

16.1.3.3 Data for a complete set of runs. The values specified in section 16.1.3.4 of Method 2F (when using Method 2F) or 2G (when using either Method 2 or 2G) should be included in the field test report once for each complete set of runs. In addition, the field test report should include the wall effects adjustment factor, $\overline{WAF}$, that is applied in accordance with section 12.7.1 or 12.7.2 to obtain the final wall effects-adjusted average stack gas velocity $\hat{v}_{final}$ or $\hat{v}_{final(k)}$.

16.1.4 Quality assurance and control. Quality assurance and control procedures, specifically tailored to wall effects testing, should be described.

16.2 Reporting a Default Wall Effects Adjustment Factor. When a default wall effects adjustment factor is used in accordance with section 8.1 of this method, its value and a description of the stack or duct's construction material should be reported in lieu of submitting a test report.

17.0 *References.*

(1) 40 CFR Part 60, Appendix A, Method 1'Sample and velocity traverses for stationary sources.

(2) 40 CFR Part 60, Appendix A, Method 2'Determination of stack gas velocity and volumetric flow rate (Type S pitot tube).

(3) 40 CFR Part 60, Appendix A, Method 2F'Determination of stack gas velocity and volumetric flow rate with three-dimensional probes.

(4) 40 CFR Part 60, Appendix A, Method 2G'Determination of stack gas velocity and volumetric flow rate with two-dimensional probes.

(5) 40 CFR Part 60, Appendix A, Method 3'Gas analysis for carbon dioxide, oxygen, excess air, and dry molecular weight.

(6) 40 CFR Part 60, Appendix A, Method 3A—Determination of oxygen and carbon dioxide concentrations in emissions from stationary sources (instrumental analyzer procedure).

(7) 40 CFR Part 60, Appendix A, Method 4—Determination of moisture content in stack gases.

(8) Emission Measurement Center (EMC) Approved Alternative Method (ALT–011) ''Alternative Method 2 Thermocouple Calibration Procedure.''

(9) The Cadmus Group, Inc., 1998, ''EPA Flow Reference Method Testing and Analysis: Data Report, Texas Utilities, DeCordova Steam Electric Station, Volume I: Test Description and Appendix A (Data Distribution Package),'' EPA/430–R–98–015a.

(10) The Cadmus Group, Inc., 1998, ''EPA Flow Reference Method Testing and Analysis: Data Report, Texas Utilities, Lake Hubbard Steam Electric Station, Volume I: Test Description and Appendix A (Data Distribution Package),'' EPA/430–R–98–017a.

(11) The Cadmus Group, Inc., 1998, ''EPA Flow Reference Method Testing and Analysis: Data Report, Pennsylvania Electric Co., G.P.U. Genco Homer City Station: Unit 1, Volume I: Test Description and Appendix A (Data Distribution Package),'' EPA/430–R–98–018a.

(12) The Cadmus Group, Inc., May 1999, ''EPA Flow Reference Method Testing and Analysis: Findings Report,'' EPA/430–R–99–009.

(13) The Cadmus Group, Inc., 1997, ''EPA Flow Reference Method Testing and Analysis: Wind Tunnel Experimental Results,'' EPA/430–R–97–013.

(14) National Institute of Standards and Technology, 1998, ''Report of Special Test of Air Speed Instrumentation, Four Prandtl Probes, Four S-Type Probes, Four French Probes, Four Modified Kiel Probes,'' Prepared for the U.S. Environmental Protection Agency under IAG No. DW13938432–01–0.

(15) National Institute of Standards and Technology, 1998, ''Report of Special Test of Air Speed Instrumentation, Five Autoprobes,'' Prepared for the U.S. Environmental Protection Agency under IAG No. DW13938432–01–0.

(16) National Institute of Standards and Technology, 1998, ''Report of Special Test of Air Speed Instrumentation, Eight Spherical Probes,'' Prepared for the U.S. Environmental Protection Agency under IAG No. DW13938432–01–0.

(17) National Institute of Standards and Technology, 1998, ''Report of Special Test of Air Speed Instrumentation, Four DAT Probes,'' Prepared for the U.S. Environmental Protection Agency under IAG No. DW13938432–01–0.

(18) Massachusetts Institute of Technology (MIT), 1998, ''Calibration of Eight Wind Speed Probes Over a Reynolds Number Range of 46,000 to 725,000 per Foot, Text and Summary Plots,'' Plus Appendices, WBWT–TR–1317, Prepared for The Cadmus Group, Inc., under EPA Contract 68–W6–0050, Work Assignment 0007AA–3.

(19) Fossil Energy Research Corporation, Final Report, ''Velocity Probe Tests in Non-axial Flow Fields,'' November 1998, Prepared for the U.S. Environmental Protection Agency.

(20) Fossil Energy Research Corporation, ''Additional Swirl Tunnel Tests: E-DAT and T-DAT Probes,'' February 24, 1999, Technical Memorandum Prepared for U.S. Environmental Protection Agency, P.O. No. 7W–1193–NALX.

BILLING CODE 6560–50–P

Table 2H-1. Distance from the Wall for the Interior Boundary, d_b, of a Method 1 Exterior Equal-Area Sector as a Function of the Stack or Duct Radius, r, and Number of Method 1 Traverse Points

Number of Method 1 Traverse Points	d_b
16	0.134 × r
20	0.106 × r
24	0.087 × r
28	0.074 × r
32	0.065 × r
36	0.057 × r
40	0.051 × r
44	0.047 × r
48	0.043 × r

Table 2H-2 Default and Minimum Acceptable Calculated Wall Effects Adjustment Factors

		Brick and Mortar Stacks	All Other Stacks and Ducts
Default WAF		0.9900	0.9950
Minimum Acceptable WAF	**Partial Traverse**	0.9800	
	Complete Traverse	0.9700	

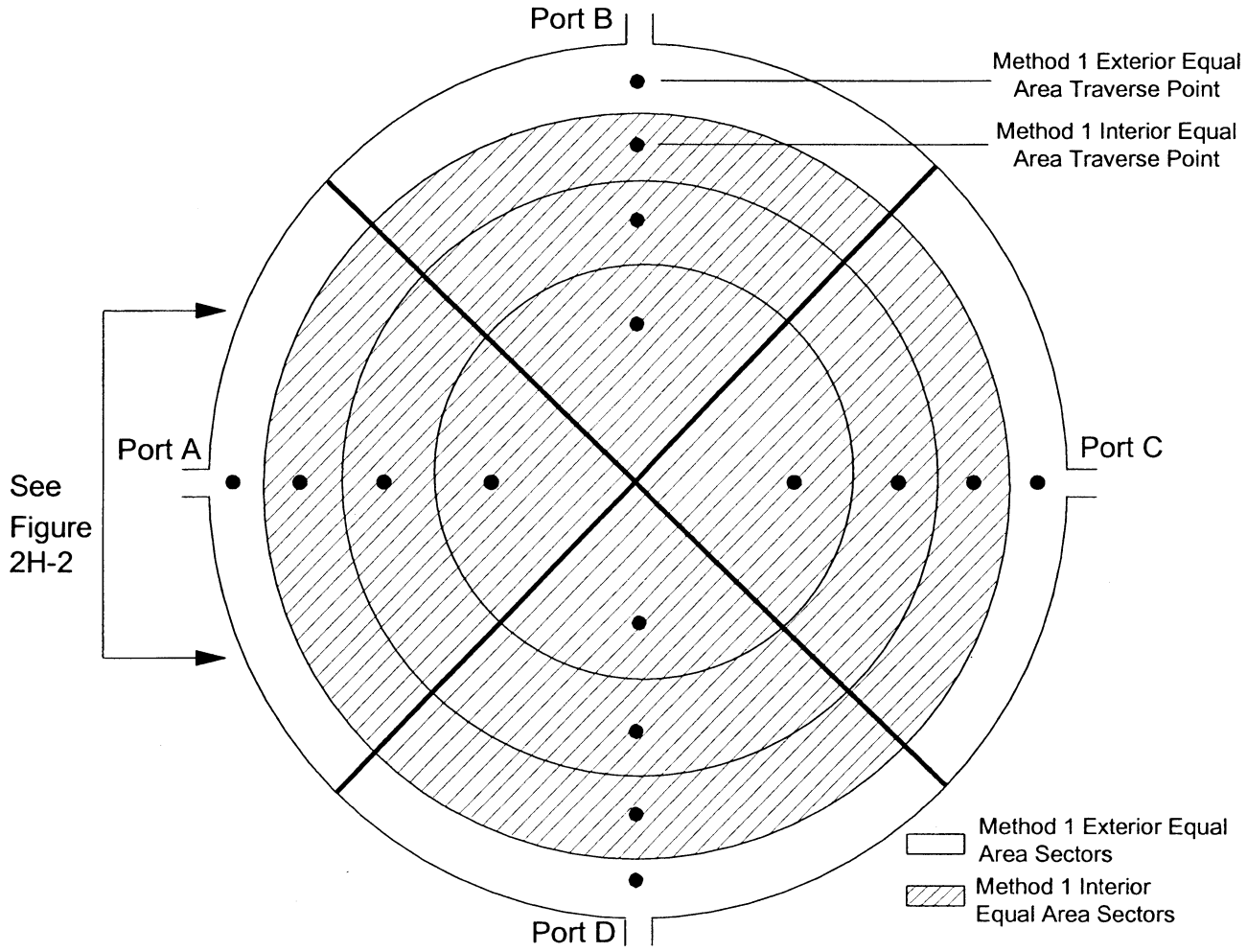

Figure 2H-1. Method 1 exterior and interior equal-area sectors with traverse points indicated.

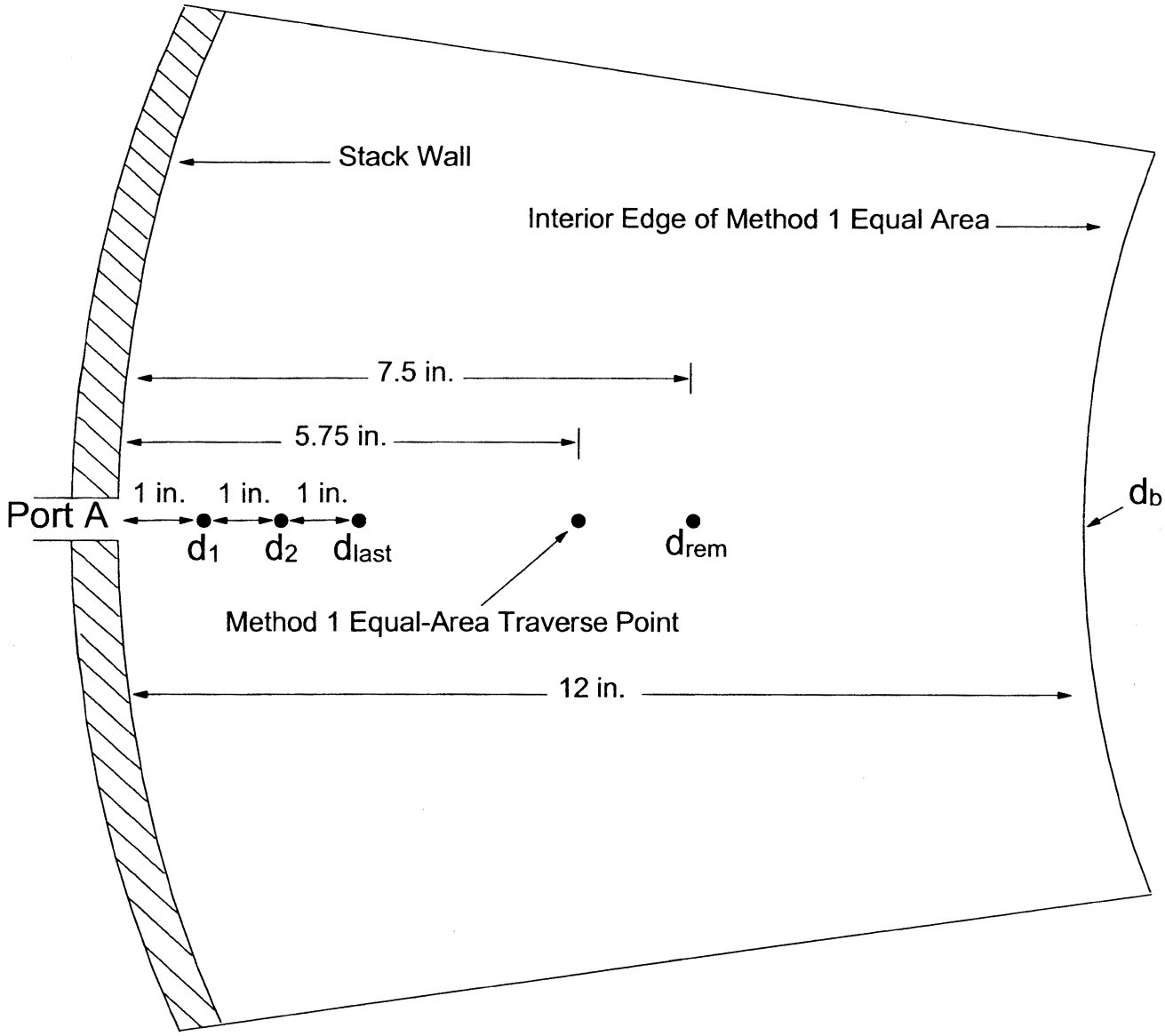

Figure 2H-2. Figure showing part of a Method 1 equal-area sector closest to the stack wall with three illustrative wall effects points at 1 in. intervals, the Method 1 equal-area traverse point, and d_{rem} for a 15 ft diameter stack.[1]

[1] Metric equivalents of English units used in Figure 2H-2 are as follows: 1 in. = 2.5 cm; 5.75 in. = 14.6 cm; 7.5 in. = 19.0 cm; 12 in. = 30.5 cm; and 15 ft = 4.6 m.

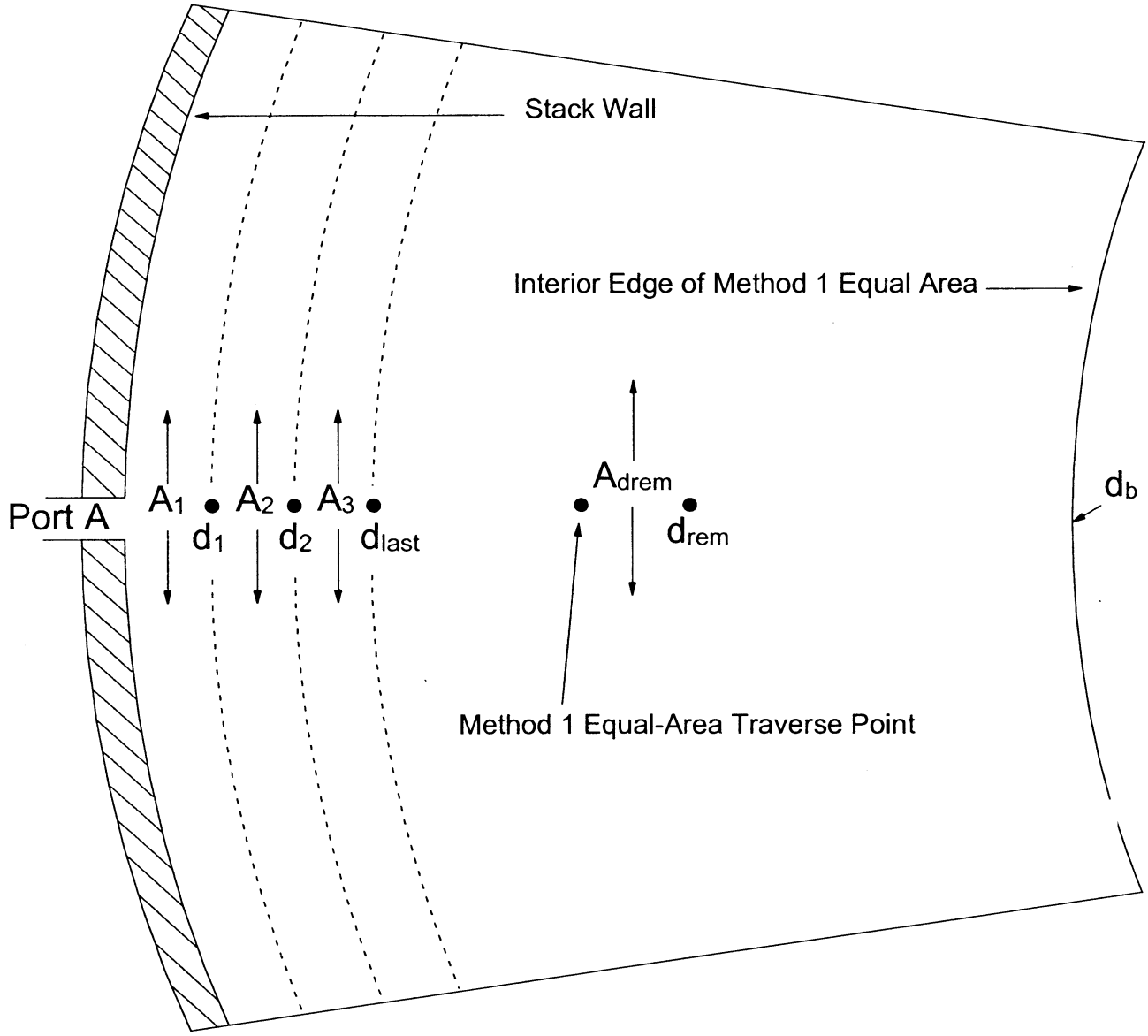

Figure 2H-3. Figure showing part of a Method 1 equal-area sector closest to the stack wall with three illustrative sub-sectors between the stack wall and d_{last} and the sub-sector represented by d_{rem}. A_1 is the area between the stack wall and d_1, A_2 is the area between d_1 and d_2, A_3 is the area between d_2 and d_{last}, and A_{drem} is the area between d_{last} and the interior edge of the Method 1 equal-area sector.

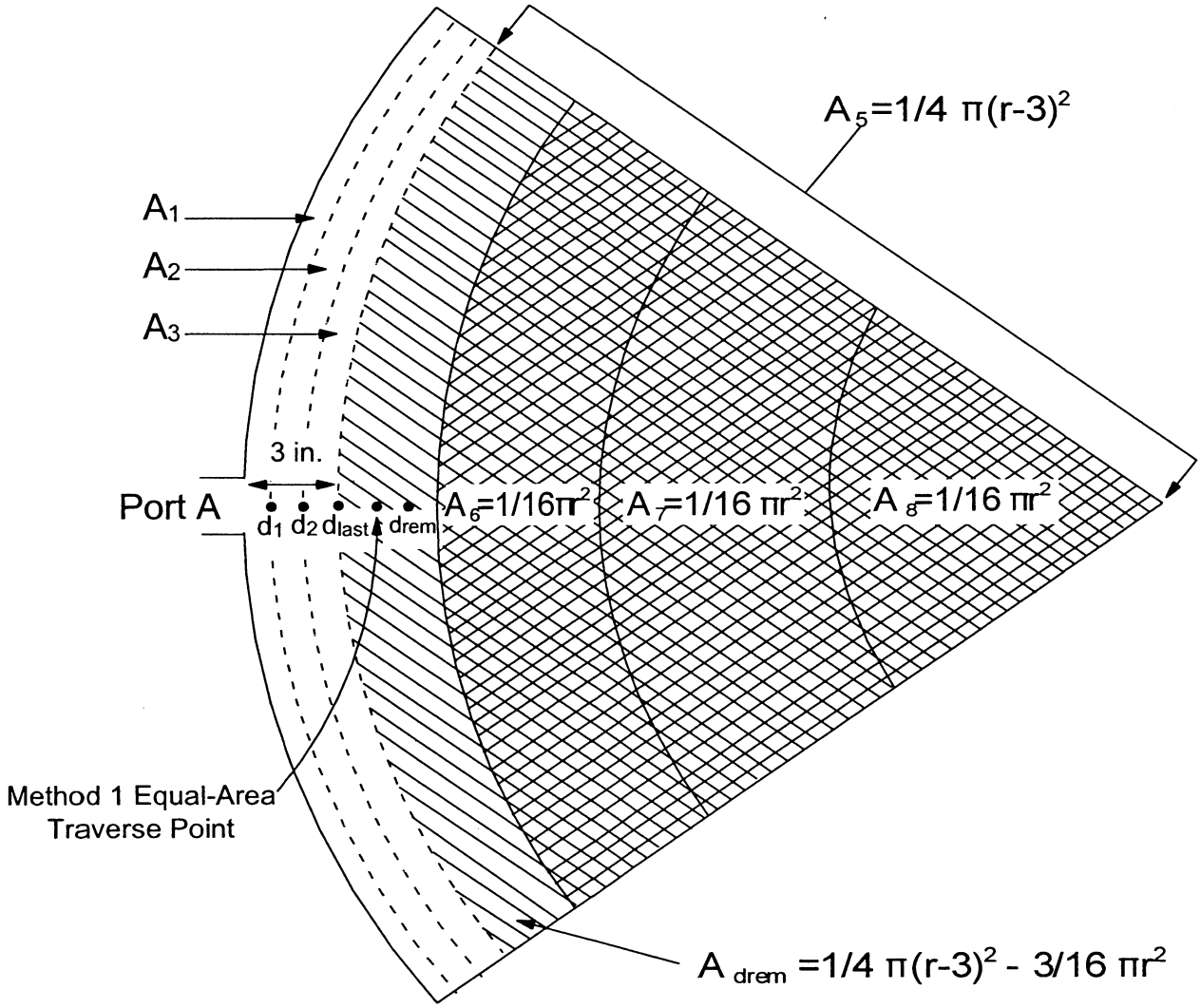

Figure 2H-4. Figure illustrating the calculations in Equation 2H-12 used to calculate the cross sectional area of the sub-sector between d_{last} and the interior edge of the Method 1 sector closest to the stack wall (A_{drem}) for a 16-point Method 1 traverse. The Method 1 equal-area traverse point and four wall effects traverse points (d_1, d_2, d_{last}, and d_{rem}) within the Method 1 sector closest to the stack wall are also shown.[1]

[1] All dimensions are given in in. Metric equivalents (in cm) are as follows: 3 in. = 7.6 cm; $A_5 = 1/4\ \pi(r-7.6)^2$; and $A_{drem} = 1/4\ \pi(r-7.6)^2 - 3/16\ \pi r^2$.

Form 2H-1. Calculation of Wall Effects Replacement Velocity Values (16-Point Method 1 Traverse)

1st Probe Type/ID/Pts. Sampled: _____ Tester(s): _____

2nd Probe Type/ID/Pts. Sampled: _____ Affiliation: _____

Entry Port ID (e.g., A, B, C, or D): _____

1. Diameter of the stack or duct (ft)		Radius, r, of the stack or duct (in.) (= diameter × 6)	

2. Location (column A), measured and decay velocities (columns B and C), and volumetric flow (column G) associated with each successive wall effects traverse point.

(A)	(B)	(C)	(D)	(E)	(F)	(G)
Distance (d) from Wall	Measured Velocity (v_d) at Distance d	Decay Velocity ($vdec_d$)	Intermediate Calculations		Area of Sub-sector (A_d)	Volumetric Flow in Sub-sector (Q_d)
		$\frac{v_{d-1}+v_d}{2}$ Note: $v_0 = 0$	$\frac{1}{4}\pi[r-d+1]^2$	$\frac{1}{4}\pi[r-d]^2$	(Col. D - Col. E)	(Col. C × Col. F)
(*in.*)	(*ft/sec*)	(*ft/sec*)	(*in.*^{2})	(*in.*^{2})	(*in.*^{2})	(*ft-in.*^{2}*/sec*)
$d = 1$						
$d = 2$						
. . .						
d_{last}						

Note: $d_{last} \leq 0.1340\ r$, where r is the radius of the stack or duct. See section 8.2.2.3 of the method.

3. Total volumetric flow for all sub-sectors located between stack wall and d_{last} (total Col. G).	
4. Volumetric flow for remainder of the Method 1 equal-area sector.	
a. Velocity measurement at distance d_{rem} from stack wall (v_{drem}). (If d_{rem}- d_{last} <½ in., then no measurement at d_{rem} is necessary. Enter the velocity at d_{last} on this line.)	
b. Total area in remainder of Method 1 equal-area segment (A_{drem}). Subtract $\frac{3}{16}\pi(r)^2$ from last entry in item 2, column E, and enter the result on this line.	
c. Multiply values on lines 4a and 4b. (Q_{drem})	
5. Wall effects-adjusted velocity in the Method 1 equal-area sector.	
a. Add the values on lines 3 and 4c. (Q_T)	
b. Divide line 5a by $\frac{1}{16}\pi(r)^2$. The resulting value is one of four "replacement" point velocity values adjusted for wall effects, $\hat{v}e_j$, as derived in Equation 2H-16.	
6. Substitute the value shown in 5b for the unadjusted velocity value in the Method 1 sector. (See Eq. 2H-18.)	

Notes: 1. Column B: If no measurement is taken at distance d, enter the velocity value obtained at the first subsequent traverse point where a measurement was taken, followed by the letters "NM". See section 8.7.1.2.

2. For clarity, only English units are shown in this form. Following are metric equivalents of the English units used in the form. In row 2, column A: 1 in. = 2.5 cm; 2 in. = 5.1 cm. In row 2, column D: If metric units (cm) are used, the term ¼ $\pi(r-d+1)^2$ must be changed to ¼ $\pi(r-d+2.5)^2$. In row 4a: ½ in. = 12.7 mm. Throughout the form, the metric equivalents of *in.*, *in.*^{2}, *ft*, *ft/sec*, and *ft-in*^{2}*/sec* are *cm*, *cm*^{2}, *m*, *m/sec*, and *m-cm*^{2}*/sec*, respectively.

Form 2H-2. Calculation of Wall Effects Replacement Velocity Values (Any Method 1 Traverse ≥16 Points)

1st Probe Type/ID/Pts. Sampled: _____ Tester(s): _____

2nd Probe Type/ID/Pts. Sampled: _____ Affiliation: _____

Entry Port ID (e.g., A, B, C, or D): _____

1. Diameter of the stack or duct (ft)		Radius, r, of the stack or duct (in.) (= diameter × 6)	

2. Location (Column A), measured and decay velocities (Columns B and C), and volumetric flow (Column G) associated with each successive wall effects traverse point.

(A)	(B)	(C)	(D)	(E)	(F)	(G)
Distance (d) from Wall	Measured Velocity (v_d) at Distance d	Decay Velocity ($vdec_d$)	Intermediate Calculations		Area of Sub-sector (A_d)	Volumetric Flow in Sub-sector (Q_d)
		$\frac{v_{d-1}+v_d}{2}$ Note: $v_0 = 0$	$\frac{2}{p}\pi[r-d+1]^2$	$\frac{2}{p}\pi[r-d]^2$	(Col. D - Col. E)	(Col. C × Col. F)
(*in.*)	(*ft/sec*)	(*ft/sec*)	(*in.*^{2})	(*in.*^{2})	(*in.*^{2})	(*ft-in.*^{2}*/sec*)
$d = 1$						
$d = 2$						
. . .						
d_{last}						

Note: $d_{last} \leq d_b$, as defined in section 8.2.2.3 of the method.

3. Total volumetric flow for all sub-sectors located between stack wall and d_{last} (total Col. G).	
4. Volumetric flow for remainder of the Method 1 equal-area sector.	
a. Velocity measurement at distance d_{rem} from stack wall (v_{drem}). (If d_{rem}- d_{last} <½ in., then no measurement at d_{rem} is necessary. Enter the velocity at d_{last} on this line.)	
b. Total area in remainder of Method 1 equal-area segment (A_{drem}). Subtract $\left(\frac{p-2}{4p}\right)\pi(r)^2$ from last entry in item 2, column E, and enter the result on this line.	
c. Multiply values on lines 4a and 4b. (Q_{drem})	
5. Wall effects-adjusted velocity in the Method 1 near-wall equal-area segment.	
a. Add the values on lines 3 and 4. (Q_T)	
b. Divide line 5a by $\left(\frac{1}{2p}\right)\pi(r)^2$. The resulting value is one of four "replacement" point velocity values adjusted for wall effects, $\hat{v}e_j$, as derived in Equation 2H-15.	
6. Substitute the value shown in 5b for the unadjusted velocity value in the Method 1 sector. (See Eq. 2H-17.)	

Notes: 1. Column B: If no measurement is taken at distance d, enter the velocity value obtained at the first subsequent traverse point where a measurement was taken, followed by the letters "NM". See section 8.7.1.2.

2. For clarity, only English units are shown in this form. Following are metric equivalents of the English units used in the form. In row 2, column A: 1 in. = 2.5 cm; 2 in. = 5.1 cm. In row 2, column D: If metric units (cm) are used, the term $\frac{1}{4}\pi(r-d+1)^2$ must be changed to $\frac{1}{4}\pi(r-d+2.5)^2$. In row 4a: ½ in. = 12.7 mm. Throughout the form, the metric equivalents of *in.*, *in.*^{2}, *ft*, *ft/sec*, and *ft-in*^{2}*/sec* are *cm*, *cm*^{2}, *m*, *m/sec*, and *m-cm*^{2}*/sec*, respectively.

Form 2H-3. Calculation of Replacement Velocity Values for a Method 1 Equal-Area Sector Closest to the Stack Wall for a 16-Point Method 1 Traverse, Using a Partial Wall Effects Traverse

1st Probe Type/ID/Pts. Sampled: *Type S Straight-up/S-13/All* Tester(s): *Test Team III*

2nd Probe Type/ID/Pts. Sampled: _____ Affiliation: *Contractor III*

Entry Port ID (e.g., A, B, C, or D): *A*

1. Diameter of the stack or duct (ft)	24	Radius, r, of the stack or duct (in.) (= diameter × 6)	144

2. Location (column A), measured and decay velocities (columns B and C), and volumetric flow (column G) associated with each successive wall effects traverse point.

(A)	(B)	(C)	(D)	(E)	(F)	(G)
Distance (d) from Wall	Measured Velocity (v_d) at Distance d	Decay Velocity ($vdec_d$)	Intermediate Calculations		Area of Sub-sector (A_d)	Volumetric Flow in Sub-sector (Q_d)
		$\frac{v_{d-1}+v_d}{2}$ Note: $v_0 = 0$	$\frac{1}{4}\pi[r-d+1]^2$	$\frac{1}{4}\pi[r-d]^2$	(Col. D - Col. E)	(Col. C × Col. F)
(*in.*)	(*ft/sec*)	(*ft/sec*)	(*in.*^{2})	(*in.*^{2})	(*in.*^{2})	(*ft-in.*^{2}/*sec*)
d = 1	*51.71 NM*	*25.85*	*16,286.00*	*16,060.59*	*225.41*	*5,827.47*
d = 2	*51.71 NM*	*51.71*	*16,060.59*	*15,836.76*	*223.84*	*11,573.72*
d_{last} *= 3*	*51.71*	*51.71*	*15,836.76*	*15,614.49*	*222.27*	*11,492.51*

3. Total volumetric flow for all sub-sectors located between stack wall and d_{last} (total Col. G).	*28,893.70*
4. Volumetric flow for remainder of the Method 1 equal-area sector.	
a. Velocity measurement at distance d_{rem} from stack wall (v_{drem}). (If d_{rem}- d_{last}<½ in., then no measurement at d_{rem} is necessary. Enter the velocity at d_{last} on this line.)	*77.01*
b. Total area in remainder of Method 1 equal-area segment (A_{drem}). Subtract $\frac{3}{16}\pi(r)^2$ from last entry in item 2, column E, and enter the result on this line.	*3,399.99*
c. Multiply values on lines 4a and 4b. (Q_{drem})	*261,832.90*
5. Wall effects-adjusted velocity in the Method 1 equal-area sector.	
a. Add the values on lines 3 and 4c. (Q_T)	*290,726.61*
b. Divide line 5a by $\frac{1}{16}\pi(r)^2$. The resulting value is one of four "replacement" point velocity values adjusted for wall effects, $\hat{v}e_j$, as derived in Equation 2H-16.	*71.41*
6. Substitute the value shown in 5b for the unadjusted velocity value in the Method 1 sector. (See Eq. 2H-18.)	

Form 2H-4 Calculation of Replacement Velocity Values for a Method 1 Equal-Area Sector Closest to the Stack Wall for a 16-Point Method 1 Traverse, Using a Complete Traverse

1st Probe Type/ID/Pts. Sampled: *Type S Straight-up/S-13/All* Tester(s): *Test Team III*

2nd Probe Type/ID/Pts. Sampled: _____ Affiliation: *Contractor III*

Entry Port ID (e.g., A, B, C, or D): *A*

1. Diameter of the stack or duct (ft)	24	Radius, r, of the stack or duct (in.) (= diameter × 6)	144

2. Location (column A), measured and decay velocities (columns B and C), and volumetric flow (column G) associated with each successive wall effects traverse point.

(A) Distance (d) from Wall	(B) Measured Velocity (v_d) at Distance d	(C) Decay Velocity ($vdec_d$)	(D) Intermediate Calculations	(E) Intermediate Calculations	(F) Area of Sub-sector (A_d)	(G) Volumetric Flow in Sub-sector (Q_d)
		$\frac{v_{d-1}+v_d}{2}$ Note: $v_0 = 0$	$\frac{1}{4}\pi[r-d+1]^2$	$\frac{1}{4}\pi[r-d]^2$	(Col. D - Col. E)	(Col. C × Col. F)
(in.)	(ft/sec)	(ft/sec)	(in.^{2})	(in.^{2})	(in.^{2})	(ft-in.^{2}/sec)
$d = 1$	51.71 NM	25.85	16,286.00	16,060.59	225.41	5,827.47
$d = 2$	51.71 NM	51.71	16,060.59	15,836.76	223.84	11,573.72
$d = 3$	51.71	51.71	15,836.76	15,614.49	222.27	11,492.51
$d = 4$	62.26	56.98	15,614.49	15,393.79	220.70	12,576.24
$d = 5$	67.16	64.71	15,393.79	15,174.67	219.13	14,179.40
$d = 6$	69.44	68.30	15,174.67	14,957.11	217.56	14,858.32
$d = 7$	72.63	71.03	14,957.11	14,741.13	215.98	15,341.75
$d = 8$	71.37	72.00	14,741.13	14,526.71	214.41	15,437.01
$d = 9$	74.37	72.87	14,526.71	14,313.87	212.84	15,510.03
$d = 10$	75.80	75.08	14,313.87	14,102.60	211.27	15,863.30
$d = 11$	77.15	76.47	14,102.60	13,892.90	209.70	16,035.93
$d_{last} = 12$	78.58	77.86	13,892.90	13,684.77	208.13	16,205.92

3. Total volumetric flow for all sub-sectors located between stack wall and d_{last} (total Col. G).	164,901.59
4. Volumetric flow for remainder of the Method 1 equal-area sector.	
a. Velocity measurement at distance d_{rem} from stack wall (v_{drem}). (If d_{rem}- d_{last} <½ in., then no measurement at d_{rem} is necessary. Enter the velocity at d_{last} on this line.)	78.51
b. Total area in remainder of Method 1 equal-area segment (A_{drem}). Subtract $\frac{3}{16}\pi(r)^2$ from last entry in item 2, column E, and enter the result on this line.	1,470.26
c. Multiply values on lines 4a and 4b. (Q_{drem})	115,430.44
5. Wall effects-adjusted velocity in the Method 1 equal-area sector.	
a. Add the values on lines 3 and 4c. (Q_T)	280,332.03
b. Divide line 5a by $\frac{1}{16}\pi(r)^2$. The resulting value is one of four "replacement" point velocity values adjusted for wall effects, $\hat{v}e_i$, as derived in Equation 2H-16.	68.85
6. Substitute the value shown in 5b for the unadjusted velocity value in the Method 1 sector. (See Eq. 2H-18.)	

* * * * *

[FR Doc. 99–11796 Filed 5–13–99; 8:45 am]
BILLING CODE 6560–50–C

ENVIRONMENTAL PROTECTION AGENCY

40 CFR Part 60

[FRL–6337–2]

RIN 2060–AH97

Test Methods: Three New Methods for Velocity and Volumetric Flow Rate Determination in Stacks or Ducts

AGENCY: Environmental Protection Agency (EPA).

ACTION: Proposed rule.

SUMMARY: EPA is proposing three new optional test methods for measuring velocity and volumetric flow rate of flue gas from fossil fuel-fired boilers and turbines. These new methods can account for velocity drop-off near the stack or duct wall and the yaw and pitch angles of flow. Owners and operators of utility units subject to the Acid Rain Program under title IV of the Clean Air Act and certain large electric generating units and large non-electric generating units that may become subject to the nitrogen oxides (NO_X) state implementation plan (SIP) call under Title I of the Clean Air Act must use an approved test method to periodically calibrate the flow rate monitors at these units. Flow rate data is used to determine the units' sulfur dioxide (SO_2) and NO_X mass emissions and heat inputs. The purpose of the Acid Rain Program and the NO_X SIP call is to significantly reduce emissions from electric generating plants and other affected units in order to reduce the adverse health and environmental effects of acid deposition or ground level ozone resulting from these emissions.

DATES: Written comments must be received by June 14, 1999 unless a hearing is held, in which case written comments must be received by July 1, 1999.

Public Hearing: Anyone requesting a public hearing must submit a written request, which must be received by EPA by no later than May 21, 1999. If a hearing is timely requested, it will be held on June 1, 1999, starting at 10:00 a.m.

ADDRESSES: Any written comments must be identified as comments on the direct final rule and companion proposed rule, identified with Docket No. A–99–14, and must be submitted in duplicate to: EPA Air Docket (6102), Environmental Protection Agency, 401 M Street, SW, Washington, DC 20460. The docket is available for public inspection and copying between 8:30 a.m. and 3:30 p.m., Monday through Friday, at the address given above. EPA may charge a reasonable fee for copying.

Public Hearing: If a hearing is held, it will take place at the 4th floor conference room at 501 3rd Street, NW, Washington, DC 20001.

FOR FURTHER INFORMATION CONTACT: John Schakenbach, Acid Rain Division (6204J), U.S. Environmental Protection Agency, 401 M Street, SW, Washington, DC 20460, (202) 564–9158; or Elliot Lieberman, Acid Rain Division (6204J), U.S. Environmental Protection Agency, 401 M Street, SW, Washington, DC 20460, (202) 564–9136.

SUPPLEMENTARY INFORMATION: We are proposing to add three new optional test methods for determination of velocity and volumetric flow rate in stacks or ducts that account for yaw and pitch angles of stack or duct gas flow and velocity drop-off near the stack or duct wall. We are promulgating the new test methods as a direct final rule without prior proposal because we view the rule as noncontroversial and anticipate no adverse comment. We have explained our reasons for this action in the preamble to the direct final rule. If we receive no timely adverse comment, we will not take further action on this proposed rule. If we receive timely adverse comment, we will withdraw the direct final rule and it will not take effect.

We will address all public comments in a subsequent final rule based on this proposed rule. We will not institute a second comment period on this action. Any parties interested in commenting must do so at this time. For further information, please see the information provided in the direct final action that is located in the ''Rules and Regulations'' section of this **Federal Register** publication.

Dated: May 5, 1999.

Carol M. Browner,

Administrator.

[FR Doc. 99–11797 Filed 5–13–99; 8:45 am]

BILLING CODE 6560–50–P

federal register

Friday
May 14, 1999

Part III

Department of Energy

Federal Energy Regulatory Commission

18 CFR Part 2 et al.

Revision of Existing Regulations Governing the Filing of Applications for the Construction and Operation of Facilities To Provide Service or To Abandon Facilities or Service Under Section 7 of the Natural Gas Act; Final Rule

DEPARTMENT OF ENERGY

Federal Energy Regulatory Commission

18 CFR Parts 2, 153, 157, 284, 375, 380, and 385

[Docket No. RM98–9–000; Order No. 603]

Revision of Existing Regulations Governing the Filing of Applications for the Construction and Operation of Facilities To Provide Service or To Abandon Facilities or Service Under Section 7 of the Natural Gas Act

April 29, 1999.

AGENCY: Federal Energy Regulatory Commission.

ACTION: Final rule.

SUMMARY: The Federal Energy Regulatory Commission is amending the regulations codifying the Commission's responsibilities under the Natural Gas Act and Executive Order 10485, as amended. The Commission is updating its regulations governing the filing of applications for the construction and operation of facilities to provide service or to abandon facilities or service under section 7 of the Natural Gas Act. The changes are necessary to conform the Commission's regulations to the Commission's current policies.

DATES: These regulations become effective June 14, 1999.

ADDRESSES: Federal Energy Regulatory Commission, 888 First Street, NE., Washington DC 20426.

FOR FURTHER INFORMATION CONTACT:

Michael J. McGehee, Office of Pipeline Regulation, Federal Energy Regulatory Commission, 888 First Street, NE., Washington, DC 20426, (202) 208–2257.

Carolyn Van Der Jagt, Office of the General Counsel, Federal Energy Regulatory Commission, 888 First Street, NE., Washington, DC 20426, (202) 208–2246.

SUPPLEMENTARY INFORMATION: In addition to publishing the full text of this document in the **Federal Register**, the Commission also provides all interested persons an opportunity to inspect or copy the contents of this document during normal business hours in the Public Reference Room at 888 First Street, NE., Room 2A, Washington, DC 20426.

The Commission Issuance Posting System (CIPS) provides access to the texts of formal documents issued by the Commission from November 14, 1994, to the present. CIPS can be accessed via Internet through FERC's Home page (http://www.ferc.fed.us) using the CIPS Link or the Energy Information Online icon. Documents will be available on CIPS in ASCII and WordPerfect 6.1. User assistance is available at 202-208-2474 or by E-mail to cipsmaster@ferc.fed.us.

This document is also available through the Commission's Records and Information Management System (RIMS), an electronic storage and retrieval system of documents submitted to and issued by the Commission after November 16, 1981. Documents from November 1995 to the present can be viewed and printed. RIMS is available in the Public Reference Room or remotely via Internet through FERC's Home page using the RIMS link or the Energy Information Online icon. User assistance is available at 202–208–2222, or by E-mail to rimsmaster@ferc.fed.us.

Finally, the complete text on diskette in WordPerfect format may be purchased from the Commission's copy contractor, RVJ International, Inc. RVJ International, Inc. is located in the Public Reference Room at 888 First Street, NE., Washington, DC 20426.

I. Introduction

The Federal Energy Regulatory Commission (Commission) is amending its regulations governing the filing of applications for certificates of public convenience and necessity authorizing the construction and operation of facilities to provide service or to abandon facilities or service under section 7 of the Natural Gas Act (NGA),[1] and amending the blanket certificate under subpart F of part 157. The Commission has determined that portions of its regulations need to be revised and/or eliminated in order to reflect the current regulatory environment of unbundled pipeline sales and open-access transportation of natural gas. The revisions would: (1) Bring the existing regulations up-to-date to match current policies; (2) eliminate ambiguities and obsolete language; (3) make the regulations more germane and less cumbersome; and (4) reduce the existing reporting burden by a total of 8,284 hours.

Additionally, the Commission is consolidating and clarifying its current practice concerning the reporting requirements needed for its environmental review of pipeline construction projects under the National Environmental Policy Act of 1969.[2] Generally, the Commission's existing requirements for the environmental review process are outdated, located in several different parts of the Commission's regulations, or, in practice, have been replaced with a preferred format that is not in the Commission's regulations, but is now used routinely by jurisdictional companies. The new regulations will provide better guidance to the regulated industry concerning what particular information the Commission needs to conduct a timely environmental analysis.

II. Background

Since the enactment of the Natural Gas Policy Act of 1978 (NGPA)[3] and the Natural Gas Wellhead Decontrol Act of 1989 (Decontrol Act),[4] the natural gas industry has undergone significant changes. Historically, the Commission regulated natural gas producers and wellhead prices and interstate pipelines served as gas merchants. Pipelines now generally provide only open-access transportation services and the Commission no longer regulates producers and wellhead prices. The Commission implemented these changes through its rulemaking process[5] and through issuing policy statements.[6]

On September 30, 1998, the Commission issued a Notice of Proposed Rulemaking (NOPR),[7] proposing to amend the Commission's regulations to conform them to its existing policies and procedures.

This Final Rule serves four basic purposes. First, it will remove certain

[1] 15 U.S.C. 717b.

[2] 42 U.S.C. 4321–4370a.

[3] 15 U.S.C. 3301–3432 (1978).

[4] Pub. L. 101–60, 103 Stat. 157 (1989).

[5] See Regulation of Natural Gas Pipelines After Partial Wellhead Decontrol, Order No. 436, 50 FR 42408 (November 5, 1985) FERC Stats. and Regs. ¶ 30,665 (October 9, 1985)(Order No. 436 instituted open-access, non-discriminatory transportation to permit downstream gas users to buy gas directly in the production area and to ship that gas via interstate pipelines); Order Implementing the Natural Gas Wellhead Decontrol Act of 1989, Order No. 523, 55 FR 17425 (April 25, 1990) FERC Stats. and Regs. ¶ 30,887 (April 18, 1990) and Removal of Outdated Regulations Pertaining to the Sales of Natural Gas Production, Order No. 567, 59 FR 40240 (August 8, 1994) FERC Stats. and Regs. ¶ 30,999 (July 28, 1994)(in Order Nos. 523 and 567, the Commission generally amended its regulations to delete those pertaining to its jurisdiction over the sale of natural gas production); and Pipeline Service Obligations and Revisions to Regulations Governing Self-Implementing Transportation; and Regulation of Natural Gas Pipelines After Partial Wellhead Decontrol, Order No. 636, 57 FR 13267 (April 16, 1992) FERC Stats. and Regs. ¶ 30,939 (April 8, 1992)(in Order No. 636, the Commission adopted regulatory changes to finally complete the evolution to competition in the natural gas industry by mandating the unbundling of interstate natural gas sales service from transportation service, requiring that those services be sold separately to natural gas purchasers).

[6] Pricing Policy For New and Existing Facilities Constructed by Interstate Natural Gas Pipelines, 71 FERC ¶ 61,241 (1995).

[7] Revisions of Existing Regulations Under Part 157 and Related Sections of the Commission's Regulations Under the Natural Gas Act, 63 FR 55683 (October 16, 1998), IV FERC Stats. and Regs. ¶ 32,535 (September 30, 1998).

regulations that are outdated and obsolete including, among other things, regulations that pertain to producer related activities made obsolete by the Natural Gas Wellhead Decontrol Act of 1989 and regulations that pertain to a pipeline's merchant function. Additionally, it will remove various regulations that pertain to certain activities that were performed under the blanket certificate issued in subpart F of part 157 that are now performed under part 284 of the Commission's regulations. The Final Rule will also remove certain outdated and/or unnecessary filing requirements and reports.

Second, the Final Rule clarifies and updates certain aspects of the regulations, for example §§ 2.55, 157.10 and 157.202, to conform them to the Commission's present policies. Third, it modifies certain existing regulations to aid in expediting the Commission's procedures for constructing certain facilities. Finally, the Final Rule replaces certain outdated environmental filing procedures with commonly followed industry practice.

In essence, the Final Rule makes numerous changes to the Commission's regulations in an effort to streamline the certificate process. First, it requires that pipelines file more complete applications by including the information described in the checklist in appendix A to part 380. The checklist specifies the minimum content of an acceptable environmental report. This information is important for a pipeline to include when it files an application because it ensures that the staff has the minimum environmental information necessary to begin its review. Since the environmental review is generally the most time consuming part of the certificate process, it is critical for pipelines to follow the checklist in appendix A to part 380. A pipeline can avoid rejection or unnecessary delays associated with requests for additional information by including the minimum checklist information in its initial application.

The Final Rule also incorporates a number of changes from the proposals in the NOPR in response to the comments filed. The following list details some of the changes in the final rule:

—Section 2.55(a) now recognizes that facilities installed along with new transmission facilities will qualify as auxiliary, as long as pipelines provide the Commission with a description of the auxiliary facilities at least 30 days in advance of their installation;
—Sections 153.21 and 157.8, now states that an application will be rejected if it ''patently fails to comply with applicable statutory requirements or with applicable Commission rules, regulations, and orders for which a waiver has not been granted,'' instead of if it ''does not conform to the requirements of this part;''
—Section 157.10 allows pipelines five business days instead of two business days as proposed to provide voluminous or hard to reproduce materials to parties that request such information;
—Section 157.20 allows pipelines to notify the Commission of the reason that an end-user/shipper cannot flow gas within 10 days after the expiration of the time specified in the order, rather than 30 days before expiration of the date;
—Section 157.202(b)(2)(i) now includes certain compression replacements, in addition to mainline, and lateral replacements in the definition of eligible facilities;
—Section 157.202(b)(6) now includes situations involving natural forces beyond the pipeline's control in the definition of miscellaneous rearrangement;
—Section 157.208(f)(2) allows pipelines to use the prior notice procedures to increase the Maximum Allowable Operating Pressure of lateral lines that were originally certificated under both case-specific section 7(c) certificates and the Part 157 blanket certificate;
—Section 157.215 clarifies that injection, withdrawal and observation wells can be drilled for reservoir testing purposes; and
—Section 157.217 now clarifies that pipelines are able to switch customers from individually certificated section 7(c) transportation rate schedules to part 284 blanket certificate transportation rate schedules.

Additionally at the request of commenters, the Final Rule: (1) Provides more guidance on the Director of the Office of Pipeline Regulation's (OPR) ability to dismiss unsubstantiated protests to prior notice application; (2) clarifies that the environmental compliance in § 157.206(b) only applies to activities involving ground disturbance or changes to operational air and noise emissions; (3) reduces the reporting requirements contained in § 157.208(e); and (4) codifies the Commission's policy that prohibits pipelines from segmenting projects under their blanket certificates to meet the Commission's spending limits.

These changes will help clarify the regulations, bring them up to date and speed up the processing of pipeline construction and abandonment applications.

III. Discussion

A. Part 2—General Policy and Interpretations

Part 2 contains the Commission's statements of general policy and interpretations regarding the NGA, National Environmental Policy Act (NEPA), the Economic Stabilization Act of 1970 and Executive Orders 11615 and 11627, the NGPA and the Public Utility Regulatory Policies Act of 1978.

Section 2.55—Definition of Terms Used in NGA Section 7(c)

Section 2.55(a)—Auxiliary Facilities Constructed With Newly Proposed Jurisdictional Facilities

Section 2.55 defines facilities that are excluded from the requirements of section 7(c) of the NGA and may, therefore, be constructed without additional certificate authority. Section 2.55(a) exempts auxiliary facilities, such as valves, drips, yard and station piping, and cathodic protection equipment, from NGA section 7(c) authority. The NOPR clarified that auxiliary facilities intended to be installed at the same time and related to newly proposed jurisdictional facilities do not qualify for the exemption under § 2.55(a) since the exemption is limited to installations which are designed specifically to improve the operation of an existing transmission system.

Comments: El Paso Energy Corporation (El Paso)[8] states that the proposal creates arbitrary distinctions among facilities and would unduly restrict pipeline operations. El Paso contends that identical facilities would be considered jurisdictional or nonjurisdictional based solely upon when they were constructed. This would subject new jurisdictional yard and station piping to abandonment authorization, while identical existing facilities would need no such authorization. According to El Paso, Enron Interstate Pipelines (Enron)[9] and Koch Gateway Pipeline Company (Koch Gateway), such a finding would increase the burden on pipelines by requiring them to keep records of all such facilities in order to abandon the jurisdictional ones when necessary. These parties believe that such facilities

[8] El Paso consists of El Paso Natural Gas Company, East Tennessee Natural Gas Company, Midwestern Gas Transmission Company, Mojave Pipeline Company, and Tennessee Gas Pipeline Company.

[9] Enron consists of Northern Natural Gas Company, Florida Gas Transmission Company and Black Marlin Pipeline Company.

should maintain their § 2.55(a) nonjurisdictional status. They argue that any other finding would be inconsistent with the objective of making the regulations less cumbersome and unnecessarily increase the administrative burden on both the pipeline and the Commission.

El Paso argues that the exemption in § 2.55(a) should apply to all auxiliary-type facilities, whether installed in connection with new or existing transmission facilities. It requests that pipelines, at a minimum, should not be required to obtain section 7(b) authority to remove or replace any auxiliary-type facility installed in connection with new transmission facilities.

Williston Basin Interstate Pipeline Company (Williston Basin) contends that auxiliary facilities associated with newly proposed facilities constructed under section 7(c) that do not cause ground disturbance should be exempt under § 2.55(a).

The Williams Companies (Williams)[10] suggests that the following clause be added to the end of § 2.55(a):

> Facilities constructed along with new transmission facilities do not qualify as auxiliary installations for the purposes of this section until such facilities and the related transmission facilities are complete and made available for service.

Williams believes that this would clarify that after this type facility is in service, it qualifies as an ''auxiliary facility'' for purposes of future modifications or abandonments.

Commission Response: As stated, the current § 2.55(a) limits the installation of auxiliary facilities to facilities installed to an existing transmission system. The NOPR proposed to exclude any auxiliary-type facilities constructed in conjunction with new pipeline facilities from the NGA exemption in § 2.55(a). As the commenters point out, this would establish dual classifications for similar facilities and would create uncertainty regarding the nonjurisdictional status of such facilities. Accordingly, in order to treat auxiliary facilities constructed in conjunction with new transmission facilities the same as auxiliary facilities constructed as part of an existing transmission system, the Commission will modify the definition of § 2.55(a) to include facilities constructed in conjunction with new pipeline facilities.

However, we are concerned that adding such facilities to the project after certification but before service begins, without notice or identification of such facilities, will not allow the Commission to environmental review all facilities related to a project proposed for construction under section 7(c) of the NGA. We will add wording to §§ 2.55(a)(2) and 380.12(c)(2) to ensure that the Commission is aware of any facilities scheduled for installation on a newly certificated facility prior to it being put into service. We believe this is necessary because certain aboveground auxiliary facilities involve substantially different environmental impacts than a pipeline by itself. These impacts may be of great concern to affected landowners. Therefore, in order for the Commission to review all facilities related to a proposed construction project for new facilities, we will require that the pipelines include a description of the facilities in the environmental report required by § 157.14(a)(6–a) of the Commission's regulations. For newly authorized facilities not yet in service, we will require that the pipeline notify the Commission of the proposed installation of the auxiliary facilities at least 30 days prior to the installation of such facilities.

Section 2.55(b)—Construction Area for Replacement Facilities

The NOPR proposed to revise § 2.55(b)(1)(ii), concerning the replacement of existing facilities, to clarify that this section only applies to replacements that involve construction within the certificated right-of-way. It also proposed a new appendix A to part 2 which gave guidance on the size of the construction right-of-way (ROW) and extra workspace which could be used for construction under § 2.55(b). These guidelines apply only where there are no records or other tangible evidence of what areas were used in the original construction.

Comments: This proposal generated many comments from the industry, most expressing the concern that the proposal is too strict and does not take into account many realities that pipelines face with replacement construction projects. The Interstate Natural Gas Association of America (INGAA) contends that where a pipeline's existing right-of-way (ROW) does not cover the area outside the ROW proposed for use, pipelines will secure such additional ROW from affected landowners prior to commencing any construction activities. For example, INGAA states that access to a facility to be replaced will be different because original equipment bridges and other ROW accesses have been restored, or construction may require working on the opposite side of the original ditch because loop lines may have rendered the original side unsafe. In addition, INGAA states that Occupational Safety and Health Administration (OSHA) rules require more workspace for safe construction. Great Lakes Gas Transmission Limited Partnership (Great Lakes), Questar Pipeline Company (Questar) and Williston Basin have similar concerns. These parties contend that the proposed regulations are not clear as to whether replacements are limited to the specific ROW historically attached to the facility being replaced or whether any existing, certificated ROW or previously disturbed on and off-site temporary work areas may by used for the replacement. They argue that pipelines should be able to use any previously disturbed areas because they would have already been reviewed environmentally by the Commission, or other federal, state or local agencies exercising jurisdiction. They urge the Commission not to set workspace limits based merely on the size of the replacement pipeline, since other factors such as construction technique, soil type and terrain are involved. In addition, these parties contend that since section 2.55 does not confer eminent domain, landowners would be protected.

Duke Energy Pipelines (Duke Energy)[11] contends that a one-size-fits-all approach fails to address additional work space needed for termination points, such as turn-arounds, which would not have been termination points during the original construction. It claims this approach also fails to address restrictions due to adjacent newer pipeline, larger diameter pipeline, new environmental restrictions such as topsoil segregation, and similar changes that have occurred since original construction.

El Paso and Enron argue that the appendix A limitation of a 75-foot ROW for pipelines larger than 12 inches is too restrictive. They propose that the Commission revise appendix A to implement a more flexible approach for determining the appropriate amount of ROW. El Paso suggests that appendix A provide that replacements involving 30 inch or larger pipeline can use up to 100 feet of ROW, while Enron proposes that 100 feet of ROW is appropriate for

[10] Williams consists of Kern River Gas Transmission Company, Northwest Pipeline Corporation, Texas Gas Transmission Corporation, Transcontinental Gas Pipe Line Corporation, and Williams Gas Pipelines Central, Inc.

[11] Duke Energy includes Algonquin Gas Transmission Company, Panhandle Eastern Pipe Line Company (Panhandle), Texas Eastern Transmission Corporation, and Trunkline Gas Company (Trunkline). Duke Energy states that it recently announced the sale to CMS Energy of Panhandle and Trunkline.

replacements involving 16 inch or greater pipeline. According to El Paso, such space is needed because OSHA requires deeper and wider trenches for larger pipelines.

In order to obviate the Commission's concern that the replacement activities were not within the original certificated footprint, INGAA proposes to add a new paragraph (e) to new appendix A, part 2. New paragraph 2(e) is proposed to read:

> If not located within the areas described above, pipe or equipment storage yards and temporary construction trailers should be located in previously graded or graveled areas.

INGAA argues that where multiple lines exist within an existing ROW corridor, siting of new replacement facilities should be allowed in any portion of the existing certificated or maintained ROW, whether or not that ROW was the one certificated for the replacement facility or not. Since the entire ROW has been disturbed and dedicated for use by the pipeline, use of any portion of such ROW would be consistent with the initial finding that construction was in the public convenience and necessity.

INGAA seeks clarification that replacement facilities not qualifying under § 2.55(b) because of the ROW issue would qualify as eligible facilities under § 157.208(a).

Michigan Gas Storage Company (Michigan Gas) asks that the Commission clarify or expand on the requirement in § 2.55(b)(1)(ii) that replacement facilities have a substantially ''equivalent designed delivery capacity'' as the facilities being replaced. Michigan Gas states that it is not clear whether, in the context of storage wells, the term refers to daily deliverability or seasonal cyclic capacity or both. Michigan Gas further states that for transmission facilities, it is not clear whether this term applies to daily design capacity or to maximum capacity as used in § 157.14(a)(7) and (8).

Commission Response. As stated, several commenters request that the Commission expand § 2.55(b) to allow pipelines to construct replacement facilities and/or use areas outside of the existing ROW for additional work space. However, we note that acquiring additional ROW from landowners raises issues associated with the Commission's landowner notification proceeding in Docket No. RM98–17–000. We do not believe it is appropriate to expand the pipeline's ability to acquire additional property from landowners outside of the Commission's review before we resolve the issues raised in the landowner notification proceeding. Accordingly, we will continue to follow Commission policy and limit the pipeline's use of property to construct facilities under § 2.55 to the existing ROW.[12]

Appendix A to part 2 defines current policy for the workspace area.[13] Current Policy requires that replacement facilities must be placed in the existing ROW. The Commission believes that the work spaces designated in the appendix A are adequate for the general case and will be adequate for most situations.

While we are not allowing additional ROW width under § 2.55, we are not limiting ROW width with respect to construction under any other part of the regulations. The staff's ''Upland Erosion Control and Mitigation Plan'' and ''Wetland and Waterbody Mitigation Procedures'' specify guidelines for ROW width, but the applicant can propose different ROW widths appropriate to the project. The Commission will determine if the proposed widths are justified on a case-by-case basis.

INGAA has filed a study concerning ROW needs. We will take this study under consideration when we review project-specific justification for proposed ROW widths.

Miscellaneous § 2.55 Issues

While we proposed no changes to the reporting requirements in § 2.55(b)(4), Williams contends that the one-time report in § 2.55(b)(4)(i) should be deleted, consistent with deletions of other obsolete reports. We agree. This report relates to replacements commenced between July 14, 1992 and November 9, 1992 and is no longer relevant and will be deleted.

Williston Basin asks the Commission to clarify whether very minor replacements need to be included in the annual report required in § 2.55(b)(4)(ii). We clarify that any facility, regardless of size needs to be reported, unless, as the regulation states, the facility is an above-ground replacement that did not involve compression or the use of earth-moving equipment.

Williston Basin also seeks a clarification that the reference to ''earthmoving equipment'' in § 2.55(b)(4)(ii) means mechanical equipment. We clarify that the term ''earthmoving equipment'' is intended to mean motor-driven equipment used for ground disturbance.

As to the clarification Michigan Gas seeks, the phrase ''equivalent designed delivery capacity,'' in the context of storage wells refers to both the daily deliverability and the seasonal cyclic capacity. In the context of transmission facilities, it refers to peak day design capacity, not maximum capacity.

B. Part 153—Application for Authorization To Export or Import Natural Gas

Although this part does not currently require that filings be made electronically, the Commission intends that this part will be subject to the electronic filing requirements currently being established in the proceeding in Docket No. PL98–1–000.

Section 153.21—Conformity With Requirements

Section 153.21(b) sets forth the criteria for the rejection of filings made under this subpart. The NOPR proposed to revise this section to authorize the Director of OPR to reject applications that do not conform to the requirements of this part within 10 days of filing, without prejudice to the applicant's refiling a complete application.

Comments: The Natural Gas Supply Association (NGSA) states that the proposed revision is silent as to whether rejection will have any bearing on acceptance of a subsequent application that does not conform with Commission regulations. NGSA states that the related § 157.8 allows for rejection without prejudice to refiling, and proposes that § 153.21(b) be modified by adding ''without prejudice.'' NGSA also proposes that the Commission not dismiss an application under § 153.21(b) unless the applicant has been given notice of the defects and allowed an opportunity to cure those defects.

Commission Response: We intend for pipelines to file complete applications or face the prospect of having their proposal rejected. However, our intent is to reject such applications without prejudice to pipelines refiling completed applications. We will also clarify our standards for rejection so that an application will not be rejected unless it ''patently fails to comply with applicable statutory requirements or with applicable Commission rules, regulations, and orders for which a waiver has not been granted.''

[12] *See* NorAm Transmission Co., 70 FERC ¶61,030 (1995).

[13] *See*, March 15, 1995 letter from the Director of OPR to Tennessee Gas Pipeline Company in Docket No. CP95–189–000.

C. Part 157—Applications for Certificate of Public Convenience and Necessity and for Orders Permitting and Approving Abandonment Under section 7 of the Natural Gas Act

Subpart A—Applications for Certificates of Public Convenience and Necessity and for Orders Permitting and Approving Abandonment of Service under section 7 of the Natural Gas Act, as Amended, Concerning any Operation, Sales, Service, Construction, Extension, Acquisition or Abandonment

Section 157.6—Applications; General Requirements

The NOPR proposed to add a new § 157.6(b)(8), which will require pipelines to file the information necessary to make an upfront determination on the rate treatment of new construction projects in accordance with the Commission's Statement of Policy in Docket No. PL94–4–000.[14]

Comments: Enron states that requiring information regarding the detailed rate impact analysis by rate schedule and zone is over broad and should be required only where an applicant is seeking rolled-in rate treatment.

INGAA and Koch Gateway submit that the requirement that ''an analysis reflecting the impact of the fuel usage by zone resulting from the proposed expansion'' should be clarified to reflect that not all pipelines employ a zoned fuel rate. Koch Gateway proposes that § 157.6(b)(8)(ii) be revised to read as follows: ''* * * and an analysis reflecting the impact of the fuel usage resulting from the proposed expansion project (including by zone, if applicable).''

Commission Response: While the NOPR preamble is not specifically clear on when the detailed rate impact analysis should be filed, the proposed regulation states that the detailed information is needed only ''if the applicant does not propose to charge incremental rates.'' We will clarify our position and the proposed regulation. We clarify that pipelines are required to file the information necessary to make an upfront determination on the rate treatment of new construction projects only when they propose rolled-in rates or when they propose incremental rates that are below the maximum part 284 rate. In both these cases, the same implications involving the initial rate established by the Commission and the prospective rate impact apply. Thus, the information required in § 157.6(b)(8) is necessary for the Commission to make a proper determination regarding the proposed rate treatment in both these instances. However, pipelines need not file the information in proposals where it seeks incremental rates at or above the maximum effective part 284 rate.

Further, we note that Koch Gateway's revision is appropriate and will be adopted. The NOPR did not intend for pipelines to submit information that was not relative to their system's rate structure. To the extent that pipelines employ zoned rates, they must submit the requested information. If a pipeline employs a postage stamp rate or some other non-zoned rate structure, it does not need to submit such information on a zone basis.

Section 157.8—Acceptance for Filing or Rejection of Applications.

The NOPR proposed to amend this section to authorize the Director of OPR to reject applications that do not conform to the requirements of this part within 10 days of filing, without prejudice to the applicant's refiling a complete application.

Comments: Duke Energy and National Fuel Gas Supply Corporation (National Fuel) contend that the proposal is not consistent with the existing authority the Director of OPR has to reject filings. They argue that the existing authority to reject filings in § 375.307(b)(2) applies to tariff and rate schedule filings that automatically go into effect within 30 days unless the Commission takes action. Further, they argue that this rejection only applies if the filing ''patently fails to comply with applicable statutory requirements and with all applicable Commission rules, regulations, and orders for which a waiver has not been granted.'' Similarly, they state that § 375.307(e)(6) provides for the rejection of prior notice applications which ''patently fail to comply with the provisions of § 157.205(b).'' However, they contend that the proposal to reject certificate applications contains no minimum legal standards, since rejection can occur if an application does not conform to the requirements of part 157.

Duke Energy, Great Lakes, Indicated Shippers,[15] and National Fuel all contend that the Commission must identify any deficiencies in an application and allow for the deficiencies to be remedied before a filing is rejected. Duke Energy specifically proposes that instead of rejecting an application within 10 days, a deficiency letter should be issued within 10 days, with a subsequent 10 days to cure. Duke Energy contends that this will not increase the burden on staff since § 385.2001 requires a rejection letter indicating the deficiencies. Thus, to the extent that there is some confusion in the requirements for filing an application, a deficiency notice will provide a reasonable opportunity for issues to be resolved.

Indicated Shippers states that if the proposal is adopted, the Commission should modify § 157.9, the notice provision, to require that the Commission issue a formal notice of the Director's rejection in lieu of the official notice of the application. In that way, interested parties will be notified promptly that there is no need to intervene and/or protest. Indicated Shippers also contends that the proposal intends for the Commission to assign the same docket number to a resubmitted application. Therefore, the Commission should establish a time limit for resubmission of an application, rather than leave the docket open.

Enron and INGAA are concerned that the proposed language could be interpreted to mean that a filing could be rejected for incomplete environmental reports, which are incomplete for any reason other than denial of access to lands, even if all of the minimum checklist items are provided. They propose that the Commission clarify in section 157.8 that a filing will not be rejected if the minimum checklist provisions have been met.

Commission Response: We will revise our proposal so that the standards for rejecting certificate filings are the same as those the Director of OPR applies in rejecting filings under § 375.307(b)(2) and (e)(6). Under those sections, a filing will not be rejected unless it ''patently fails to comply with applicable statutory requirements and with all applicable Commission rules, regulations, and orders for which a waiver has not been granted.'' We will incorporate this language into §§ 153.21 and 157.8. In addition, we will view an application as ''patently'' deficient if it fails to include the minimum checklist of environmental information, as well as the information required in part 157. Thus, pipelines are put on notice that they must file the information requested or their applications will be subject to rejection. The Commission will not expend its resources on patently deficient applications.

Requests for a notice and cure period prior to rejecting any filing are denied. The minimum environmental checklist and the information required in part 157 do not include new or unique

[14] Pricing Policy For New And Existing Facilities constructed By Interstate Natural Gas Pipelines, 71 FERC ¶61,241 (1995).

[15] Indicated Shippers consists of Chevron U.S.A., Dynegy Corporation, Exxon Corporation, Marathon Oil Corporation, and Shell Offshore, Inc.

requirements. We are codifying our long-standing environmental procedures in order to help ensure more timely processing of applications by requiring that pipelines no longer file patently deficient applications. As such, we will no longer send deficiency letters seeking the minimum checklist information required of filings. However, if an application is rejected, the Director of OPR will send a letter indicating the deficiencies and reasons for rejection. In such a circumstance, an applicant will have full knowledge of the deficiencies in its application and the steps necessary to comply with the Commission's filing requirements. Also, the Director of OPR's rejection letter will be on CIPs and potential interveners should take notice.

We disagree with Indicated Shippers' belief that a resubmitted application be redocketed with the same number as the rejected application. We are conforming § 157.8 to the existing regulations in § 153.21(b) that require a new docket number for rejected applications that are resubmitted. The Commission prefers to have finality in its docketing system. In addition, the Commission's regulations give no administrative or other procedural benefit to applicants because of the docket number assigned to a particular project.

Finally, we note that INGAA proposes the following revision: However, an application will not be rejected solely on the basis of (1) environmental reports that are incomplete because the company has not been granted access by the affected landowner(s) to perform required surveys, etc., or (2) environmental reports that are incomplete, but where the minimum checklist requirements of part 380, appendix A have been met.

We agree with INGAA's proposed revision and will change § 157.8 accordingly. We recognize that not all environmental information is available at the time of filing. However, the information in the checklist is the minimum that must be submitted at the time of filing.

Section 157.9—Notice of Application

The NOPR proposed to issue a notice within 10 days of filing.

Comments: The Process Gas Consumers Group, the American Iron and Steel Institute, and the Georgia Industrial Group (Process Gas Consumers) are concerned that abandonment of laterals will strand end users behind LDCs. They want to strengthen the provisions to require that notices should be actually delivered to all of the pipeline's shippers who have taken service through the lateral or delivery point in the last five years. In addition, they argue that notice should be posted on the pipeline's EBB and that applications subject to delegation orders have as complete a notice as abandonment applications going to the Commission, including maps of the facilities to be abandoned. They contend that such requirements will ensure due process rights of shippers which directly or indirectly, or through released capacity, take service through the pipeline.

Commission Response: We believe that the Commission's current procedure for noticing certificate applications, including prior notice applications filed under § 157.205, more than adequately identifies the nature and content of each filing. Requiring that notices be delivered to all shippers that have used certain facilities during the past five years would prove to be extremely unwieldy, burdensome, and administratively inefficient. We see no basis why shippers who are no longer on the pipeline system should be notified. We do not intend to create a separate class of applications that are treated differently than other filings. Moreover, notices of applications, and applications themselves are available for electronic viewing at the Commission's website at www.ferc.fed.us/online/rims.htm. Thus, Process Gas Consumers, and all others, will be able to view in total all applications filed with the Commission.

Section 157.10—Interventions and Protests

The NOPR determined that allowing parties to intervene in response to Draft Environmental Impact Statements (EIS) is appropriate. It also proposed to amend § 157.10 to clarify that pipelines do not have to serve voluminous or difficult to reproduce materials, such as copies of environmental information, upon all parties in a proceeding, except as specifically requested. The NOPR provided that any party requesting a complete copy of a filing must be served with one within two business days.

Comments: INGAA also seeks clarification that the pipeline need only keep voluminous or difficult to reproduce material, such as complete sets of environmental information, available to the public until the construction application is no longer pending Commission action. Similarly, Great Lakes states that it is not clear what constitutes a ''central location'' for keeping a complete filing. Great Lakes seeks clarification that this requirement is met if the pipeline maintains copies, either paper or electronic, at compressor stations located closest to the project site(s). Williston Basin wants to make such information available in public building(s) or town(s) near the vicinity of the job site.

Duke Energy requests that the Commission extend the proposed two business day time period to provide voluminous or difficult- to-reproduce material to 10 days. Similarly, Great Lakes seeks to have the time frame extended from two days to five days. Both parties believe that numerous requests, the nature of the information, and the fact that outside consultants may be required to reproduce the material necessitates more than a two day time frame. The American Public Gas Association states that parties will need time to evaluate information once it is received and recommends that the Commission provide 45 days for interventions to be prepared. El Paso Energy seeks clarification that companies are not required to provide copies of confidential material to interveners and will still be able to request confidential treatment for information under section 388.112. Likewise, Great Lakes wants clarification that privileged and confidential data are not required to be provided with any electronic information kept near the job location.

Process Gas Consumers requests that all notices supply the name, address and telephone number of an applicant's knowledgeable contact to allow parties to request an applicant's voluminous material (only available upon request).

Great Lakes urges the Commission not to expand its current intervention procedures to allow non-utility agencies to intervene by notice. The Sempra Energy Companies (Sempra Energy)[16] is concerned that pipelines will not provide voluminous material timely and thus, interveners may be not have time to evaluate a filing and face having their protest dismissed.

The Advisory Council on Historic Preservation (Council) states that the rule should allow for intervention based on section 106 of the National Historic Preservation Act (NHPA) the same as intervention is allowed for NEPA.

Commission Response: As to the Council's request, we note that we treat section 106 of the NHPA as part of the environmental process.

We agree with INGAA that a pipeline only need keep voluminous materials available to the public until the application is no longer pending Commission action, i.e., the order is final and not subject to rehearing. The

[16] Sempra Energy consists of various entities including Pacific Interstate Transmission Company, Pacific Interstate Offshore Company, Southern California Gas Company, and San Diego Gas and Electric Company.

reason the information is meant to be available to the public in the first place is so that parties will know all the details of a particular project in sufficient time to intervene and express any opinions they may hold.

The Commission will allow pipelines to keep electronic copies of voluminous material at a central location, such as libraries and like public buildings, in each county in the project area provided that the information is easily accessible. Williston Basin's proposal that such information be made available in public buildings or towns near the job site appears to present fewer access problems than keeping such material at the job location. There could be safety or other reasons that the interested public may not have easy access to materials kept on the job site. It seems preferable to locate such material in buildings open to the public with flexible business hours, i.e., libraries and like public buildings with evening and weekend hours, located in each county as close as practicable to the project area to provide for as much public access as possible.

Various parties object to the proposal that pipelines serve a full copy of such voluminous or difficult to reproduce material on requesting parties within two business days and seek a longer time period. Due to the nature of the material at issue, it seems reasonable to allow the pipelines more time to reproduce and distribute requested material. We will require that the pipeline have complete copies of its application at the above mentioned publicly available building location(s) in each county affected by the project, either in paper or electronic format, within three business days of filing an application. However, we will allow the pipeline five business days from the date of a request to supply a requesting party with a full copy of the filing. Since we are requiring that pipelines make complete copies of applications available publicly, we do not anticipate extensive individual requests for such copies. However, it is incumbent upon the pipeline applicant to serve copies of its application to parties seeking detailed information regarding the proposed project.

Pipelines do not have to supply privileged or confidential material when serving these copies, nor supply such material with copies provided near the job location. However, if at a later time, the Commission or its delegate determines that any claim to privileged or confidential treatment under § 388.112 is without merit, the pipeline must serve such material on requesting parties and include such material with the copies provided near the job location.

We agree with Process Gas Consumers' request that all notices should supply the name, address and telephone number of the contact person to allow parties to request an applicant's voluminous material. We will modify §§ 157.6(b)(7) and 157.205(b)(5) accordingly.

As to Great Lakes' concern regarding non-utility interveners, the NOPR did not change the status or rights of any parties intervening in certificate proceedings. All parties have the same rights and status in a proceeding before the Commission as they had prior to issuance of the NOPR.

Sempra Energy's concern is misplaced. The intent in the NOPR was to limit the OPR Director's authority rejecting unsubstantiated protests to prior notices filed under the blanket certificate issued in subpart F of part 157. The Director of OPR's authority does not extend to rejection of protests to section 7(c) applications filed under subpart A of part 157. If a pipeline does not provide voluminous material timely, as required by the regulations, parties can protest and/or file a complaint. In such a situation, the pipeline risks delaying the timetable it has established for completing its proposed project. However, in order to prevent any further misunderstanding of our intent regarding rejection of protests, we will modify § 375.307(a)(10) to specifically state that this rejection authority is limited to unsubstantiated protests to prior notice applications.

Section 157.16—Exhibits Relating to Acquisitions

The NOPR proposed to revise § 157.16(c)(1) to require the pipeline to include a brief statement explaining the basis or methods used to derive the related depreciation, depletion and amortization reserves.

Comments: INGAA is concerned about the change requiring ''* * * a brief statement explaining the basis or methods used to derive the related depreciation, depletion or amortization''. It contends that the proposed change is duplicative of other provisions in § 157.16 and should be deleted. It argues that the introductory text should provide the Commission with the information it seeks and that the proposed revision is unnecessary.

Commission Response: We disagree. The purpose of the change is to point out a specific area where additional information would facilitate the processing of an application. While the introductory text of § 157.16 requires the pipeline to provide a full and complete explanation of all particulars of the acquisition, this requirement is very broad and often overlooked with respect to the accumulated depreciation, depletion and amortization reserve amounts. When this occurs, the application is delayed because this information must then be requested from the pipeline.

Section 157.17—Applications for Temporary Certificates in Cases of Emergency

The NOPR proposed to amend §§ 157.17(a) and (b) to remove as outdated the reference to the date the Commission initiated its electronic filing requirements.

Comments: Great Lakes urges the Commission to use the NOPR to clarify the circumstances which constitute an emergency under this section and § 284.262. Great Lakes wants the Commission to clarify that if an emergency exists, a temporary certificate can be authorized when construction is necessary to forestall an anticipated loss of capacity or when a foreseeable facility outage (or other emergency event) outside a pipeline's control is probable. As an example, Great Lakes cites naturally occurring changes such as a landslide or riverbed erosion. A pipeline may deem it prudent to relocate facilities away from the suspect area before damage occurs. Another example involves corrosion that will, in short time, breach the pipewall. A pipeline should be able to immediately repair such a situation as an emergency.

Great Lakes also proposes that § 284.262 be updated to reflect pipelines' transition from merchants to transporters. Great Lakes contends that such a change would redefine emergencies outside the context of a gas supply shortage and make allowances for emergency facility repairs. Great Lakes suggests that the Commission revise the self-implementing emergency provisions of § 284.262 to permit 60-day remedial construction to remedy facility problems which threaten interruption of transportation, followed by a 45-day prior notice-type filing for permanent approval to operate the emergency facilities. This change would allow pipelines to repair facilities over a 60-day period, and then file a prior notice to obtain permanent authority to operate emergency facilities.

Finally, Great Lakes states that the Department of Transportation (DOT) would view a pressure reduction, at least temporarily, as relieving certain emergency conditions. However, Great Lakes is concerned that this might not satisfy NGA requirements since the

pressure reduction could result in a loss of design-day throughput and an involuntary abandonment of service. Great Lakes seeks clarification that when a DOT-defined emergency transpires, for purposes of acquiring a temporary certificate, the emergency will continue until the pipeline has restored its system to its prior operating condition.

Commission Response: We agree that our emergency regulations should be updated to recognize that pipelines are now primarily transporters and not merchants of gas and that pipelines should be able to respond to imminent emergencies. However, the possibility still exists that a supply shortfall could precipitate an emergency. Therefore, we will amend § 284.262 to reflect that emergencies can occur due to diminution of pipeline supply or capacity, both anticipated and unanticipated. We clarify that pipelines can repair facilities affected by an emergency in order to restore capacity for a 60-day period (subject to an additional 60 day period) followed by a prior notice or section 7(c) application to obtain permanent authority to operate the emergency facilities.

We also clarify that in emergency instances where pipelines are required to reduce operating pressure to satisfy DOT safety standards, the underlying emergency continues to exist until the pipeline restores its regular operating conditions. Of course, the continued emergency status is contingent upon the pipeline complying with the requirements of sections 157.17 and 284.262.

Section 157.18—Applications To Abandon Facilities or Services; exhibits

The NOPR proposed to add an explicit statement that makes it clear that an environmental report is required for certain kinds of abandonments as specified in § 380.3(c)(2).

Comments: INGAA notes that the proposed regulations require an environmental report for the abandonment of facilities, except for categorical exclusions. INGAA and Enron believe that all facilities abandoned in-place should be excluded from the environmental reporting requirement. This would be consistent with the proposal in the NOPR in § 157.206(b) that environmental review should be commensurate with the amount of ground disturbance. The same principle should apply to facilities abandoned in-place. In the alternative, INGAA, Enron, and Questar suggests that any necessary clearances be provided for in-place abandonments rather than a full environmental report.

Commission Response: We do not agree with INGAA that all facilities abandoned in place should be excluded from the environmental reporting requirement. For example, certain facilities may be contaminated with polychlorinated biphenyls (PCBs). Even facilities that are abandoned in place may have associated ground disturbance such as that required to cut and cap the pipeline segment. In addition, the Commission wants to determine if the landowner has any concerns with respect to having the pipeline removed. Clearly, this action warrants some level of environmental review. As has been our policy involving all projects that are minor in scope, pipelines can determine what environmental resource reports are not applicable to their project and identify them in the application along with the reasons they are not applicable. Thus, a detailed environmental report is not contemplated for a routine abandonment in place of a section of pipeline, but key environmental factors need to be addressed.

Section 157.20—General Conditions Applicable to Certificates

Section 157.20(b)

The NOPR proposed to revise § 157.20(b) to allow for facilities to be completed ''and made available for service'' instead of ''in actual operation'' within the period of time specified in a particular order.

Comments: INGAA and Enron support the concept, but have concerns about the notification requirement. Both parties state that pipelines may have no way of verifying, at the 30 day mark, whether the end-user/shipper will meet the time period to flow gas. Enron requests removal of the 30 day notification requirement. Facilities may be available to other shippers on a secondary basis, although the firm end-user/shipper has not taken service. INGAA and Williams propose that pipelines report within 10 days after the prescribed time if the end-user/shipper has not taken service through the new facilities. Enron suggests that a pipeline report within 30 days instead of 10 days after the date specified in order if the shipper has not taken service through new facilities.

Williams recommends that the phrase ''shall be actually undertaken and regularly performed'' be modified to read ''shall be available for regular performance.'' Williams contends that this is consistent with the proposed change in § 157.206(c), since the pipeline cannot control when the customer may be ready to start service.

Process Gas Consumers requests that the Commission clarify that it did not intend to continue applying a one-year completion period (''period of time to be specified''), since it is changing the regulation to allow for unintended delays in commencing service. They also want the Commission to clarify that it will continue to be flexible in granting waivers and/or extensions of time to complete facilities.

Commission Response: We agree that pipeline applicants may not be able to verify 30 days in advance that a shipper is unable to meet the timetable to commence service. It seems reasonable to allow a pipeline to report within 10 days after the prescribed time if the end-user/shipper has not taken service through the facilities. In addition, Williams' proposal seems reasonable and consistent with the change proposed in the NOPR. However, Process Gas Consumers is incorrect in assuming that the Commission intends to discontinue determining a time frame for the facilities to be constructed. To the contrary, we intend to continue applying a specific time period for the completion of construction projects. While that time period is typically one year, the Commission has permitted other periods of time for completion of a project and will continue to exercise its discretion in acting on waivers and/or extensions of time to complete facilities.

Section 157.20(c) and (d)

We will revise § 157.20(c) and (d) to remove the requirement that quarterly reports be filed. Section 157.20(c)(2) requires applicants to file quarterly progress reports on authorized construction. We will remove this section because it duplicates information the Commission's environmental staff already collects. Likewise, we will remove § 157.20(d)(1), which requires applicants to file quarterly progress reports on the status of facility acquisitions. However, pipelines are still required to notify the Commission of the date of acquisition of facilities and the beginning of authorized operations.

Subpart F—Interstate Pipeline Blanket Certificates and Authorization Under Section 7 of the Natural Gas Act for Certain Transactions and Abandonment

Section 157.202—Definitions

Section 157.202(b)(2)(i)—Eligible Facilities

The NOPR proposed to expand the definition of ''eligible facility'' contained in § 157.202(b)(2)(i) to include mainline and lateral

replacement facilities that do not qualify under § 2.55(b) because they will have an impact on mainline capacity.

Comments: INGAA contends that any replacement project which would not qualify under the proposed § 2.55(b) regulations would or should qualify as an eligible facility under § 157.208(a), if it meets the spending limits and environmental constraints. Similarly, National Fuel, Questar and Williams are concerned that the change would not cover a mainline replacement not qualifying under § 2.55(b) because of the requirement that replacements must be within same ROW. They argue that replacements not in the same ROW should be covered under the blanket certificate instead of requiring a separate § 7(c) application. National Fuel suggests the following revision to proposed § 157.202(b)(2)(i):

> Further, eligible facility includes mainline and lateral replacements that do not qualify under § 2.55(b) of this chapter because they will have an impact on the capacity of the mainline facilities, or because they will not satisfy the location or work space requirements of § 2.55(b).

Commission Response: We intend to allow replacement facilities that do not qualify under § 2.55(b) because of land requirements to be eligible facilities that can be constructed under § 157.208 of the blanket certificate. Further, to the extent that pipelines require more ROW than is provided for in appendix A to part 2 for replacement projects, including those not in the original footprint, such as river crossings, etc., those replacements would qualify as eligible facilities under our proposal. We reiterate that any such replacements are subject to the environmental requirements of this section and will be subject to whatever landowner notification procedures that may be adopted in Docket No. RM98-17-000.

Replacements for Sound Engineering Purposes and Incremental Capacity

Comments: The American Gas Association (AGA) states that the proposed regulations do not clearly reflect the Commission's intentions that replacements must be done for sound engineering purposes and not to create additional mainline capacity. AGA contends that the proposals will allow construction of facilities that can substantially increase capacity and result in bypass. AGA proposes that § 157.202(b)(2)(i) be amended to provide that replacements are done for sound engineering reasons and not to create additional mainline capacity. Similarly, El Paso and Michigan Gas Storage request the Commission clarify the regulation so that mainline and lateral replacements are done only for ''sound engineering reasons and not for the purpose of creating additional mainline capacity.'' They contend that this clarification in regulatory text will ensure that the limitation is clearly communicated to certificate holders, eliminating potential confusion and compliance issues.

El Paso contends that the Commission should remove the words ''because they will have an impact on the capacity of the mainline facilities'' from the definition replacements as eligible facilities. El Paso argues the proposed language defining replacement facilities is likely to create confusion because it refers to ''impact on the capacity,'' whereas § 2.55(b) requires replacements to have a ''substantially equivalent designed delivery capacity.''

NGSA, on the other hand, opposes expanding eligible facilities to include any mainline and lateral replacements done automatically. NGSA contends that such replacements should only be allowed on a prior notice basis. This would allow parties to protest unnecessary replacements, which they believe are not being done for ''sound engineering reasons,'' but solely to increase capacity. NGSA proposes that any facility replacement resulting in an increase of capacity be subject to a prior notice.

Similarly, Sempra Energy opposes inclusion of any mainline facilities within the blanket certificate. Sempra Energy is concerned with additional mainline capacity being constructed under the guise of ''replacements.'' It believes that new or additional markets should be served through permanent capacity release, by another market entrant, or by LDCs or other non-FERC regulated services. Allowing construction of additional mainline capacity under the blanket provides pipelines a competitive advantage without Commission, state, consumer, and competitive reviews.

Indicated Shippers suggests that prior notice be required for construction of all mainline facilities that could affect capacity, regardless of cost. Indicated Shippers believes such a limit would help protect against pipelines circumventing cost caps by segmenting essentially integrated projects in order to keep each component below the automatic authorization cost cap.

Commission Response: As we stated in the NOPR and reiterate here, any replacement facilities must be done for sound engineering reasons. Our purpose is to allow replacements under the blanket certificate where the replaced facility is marginally larger than the existing pipeline. We recognize that this may result in an incidental increase in mainline capacity. To the extent that additional capacity is created by the project, such capacity must be incidental and not intended to increase the point to point transportation capacity of the pipeline.[17] As such, we will revise the definition of eligible facility in § 157.202(b)(2)(1) to include replacement facilities that result in an increase in the capacity of mainline facilities. The regulation will also specifically state that replacements must be done for sound engineering purposes and not for the primary purpose of creating additional mainline capacity.

NGSA and Sempra Energy oppose inclusion of replacements under the blanket certificate because they believe that pipelines will use the new regulations to increase mainline capacity at customer expense. We disagree. Revising the definition of eligible facility specifically puts pipelines on notice that any replacement must be done for sound engineering reasons and not for the purpose of creating additional mainline capacity. Parties believing that replacements are done for other than those reasons should inform the Commission and may want to consider filing a complaint. In addition, they can challenge the cost and intent of the replacement in the relevant rate proceeding. Finally, we find that parties have not presented any compelling reason why the Commission should specifically exclude all replacements that result in an incidental, incremental increase in capacity from being subject to the automatic authorization requirement.

Replacement Compression Facilities

Comments: Great Lakes proposes that the Commission include compressor replacements as eligible facilities, when such replacements cannot be constructed under § 2.55(b) because they will have an impact on mainline capacity. Great Lakes requests that the Commission clarify that replacement compression facilities which result in incidental changes in capacity, in addition to increases in replacement pipe size, are included in the proposed definition of eligible facilities. Great Lakes claims that certain compressor and engine models are no longer manufactured and most newer compressors have a greater horsepower rating and yield greater capacity. According to Great Lakes, a pipeline's option often is reduced to either

[17] However, if usable capacity is created, it must be posted on the pipeline's EBB along with any other unused capacity.

donating a unit so it can replace obsolete or major damaged units immediately, or wait for separate section 7(c) approval to install replacement compression facilities which yield an unintended, but measurable, increase in capacity.

Great Lakes requests that the Commission recognize a pipeline's need for flexibility in terms of sizing replacement compression facilities under § 2.55(b). Great Lakes wants the Commission to clarify that pipelines are allowed to install under § 2.55(b) replacement compressor units or components which are the nearest, practical, commercially available match to the removed unit or component.

Commission Response: We agree that replacement compressors, as well as replacement mainlines and laterals that have an incidental impact on mainline capacity should be covered by the proposed change to the definition of eligible facilities because they do not qualify under § 2.55(b). The rationale for including replacement compressors is the same as that for replacement lines. To the extent that replacement pipeline or compression is marginally different than the original facilities and may result in an increase in capacity, the replacement must be done for sound engineering reasons and not for the primary purpose of creating additional mainline capacity.

However, we emphasize that replacement pipeline and compression *must* be the closest available size and horsepower rating to the facilities being replaced. While these replacement projects are subject to the spending limits in § 157.208, pipelines *must not* segment any such projects in order to circumvent the automatic or prior notice spending limits under the blanket certificate. We note that parties who either know or believe that a pipeline segmented replacement facilities to avoid cost caps can challenge recovery of those costs in the relevant rate proceeding and attempt to show a pattern by the pipeline of violating the Commission's regulations.[18]

Under § 2.55(b) replacements must have a ''substantially equivalent design delivery capacity.'' Therefore, if the installation of the nearest, practical, commercially available compressor unit would result in an increase in capacity, the replacement would not qualify under § 2.55(b) and may be eligible to be installed under the pipeline's blanket certificate.

[18] Our authority to remedy cases of segmenting includes revoking the pipeline's blanket authority.

Storage Laterals and Miscellaneous Rearrangements

Comments: The KN Pipelines request that the Commission clarify that miscellaneous rearrangement of, and appropriate changes in diameter of storage laterals within the field meet the definition of ''eligible facility.'' [19] KN Pipelines contends that the practical process of rearranging a mainline pipe or storage pipe is the same, in both cases the pipeline would likely have to acquire a new easement. KN Pipelines states that a reasonable use of the blanket certificate for the relatively small laterals typically associated with storage fields will help alleviate an unnecessary burden on the Commission. Similarly, Questar seeks clarification that injection and withdrawal laterals connecting storage filed wells with central compression or transmission lines are eligible as small diameter laterals under § 157.208(a).

Michigan Gas also states that the reference in this subsection should be to facilities necessary to provide service within existing certificated levels, rather than certificated volumes. This would recognize that replacement storage field facilities may not be directly related to the existing certificated storage ''volumes.''

Commission Response: We agree with KN Pipelines that storage and other lateral lines as well as mainlines can be rearranged under § 157.208. Section 157.202(b)(6) contemplates miscellaneous rearrangement of facilities that does not result in any change in service, including changes in existing field operations or relocation of existing sales or transportation facilities. As to KN Pipelines clarification, as long as any change in the diameter of storage laterals does not result in any change in service such as increasing capacity, deliverability or the injection and withdrawal rate, and otherwise meets the definition for miscellaneous rearrangement in § 157.202(b)(6), we agree with KN Pipeline's request that such a change can be done under § 157.208.

Additionally, injection/withdrawal laterals connecting storage field wells with central compression or transmission lines are eligible as small diameter laterals under § 157.208(a). These type facilities are consistent with the intent of the regulations, as long as they do not result in any change in existing service or operation, or increase the capacity or deliverability of the storage field. We see no reason to treat storage laterals any different than any other lateral covered under the blanket authority.

We also agree with Michigan Gas and will change the reference from ''within existing certificated volumes'' to ''within existing certificated levels.''

Automatic Abandonment

Comments: El Paso states that the NOPR does not address the issue of whether pipelines must obtain abandonment authorization for mainline or lateral facilities which are being replaced under the blanket certificate. The Commission should clarify that either no section 7(b) authority is needed for replacements constructed under this section or provide for blanket section 7(b) authority.

Commission Response: We note that under new § 157.216(a)(2), pipelines will have the authority to automatically abandon eligible facilities, subject to the pipeline obtaining written consent from existing shippers. However, there is no need to get shipper approval when the abandonment is for a facility that will be replaced and the pipeline will continue service.

Interconnecting Points

Comments: INGAA wants the Commission to expand the definition of interconnecting points to include the pipeline that connects the tap, meter, M&R and minor related piping identified in the NOPR. INGAA and Koch Gateway believe that excluding interconnecting pipeline segments from the blanket certificate unnecessarily restricts open access service and limits the ability of pipelines to quickly react to meet market demands for additional grid flexibility. According to INGAA and Koch Gateway, the spending limits under the blanket certificate effectively limits the length of any interconnecting pipeline. INGAA, KN Pipelines and Questar request that the Commission, as a minimum, include compression as part of the facilities involved in an interconnect. They state that compression is common, since the prevailing pressures of interconnecting pipelines usually differ.

Questar argues that allowing only approximately 200 feet of ''minor related piping'' is too restrictive. Questar contends that there is a clear need to allow piping that may be miles in length, even as much as 20 miles, to interconnect with other interstate pipelines. Regardless of length, Questar states that the function is the same—to connect the systems of two transporters operating under Part 284. Citing *KN Interstate Gas Transmission Company*

[19] KN Pipelines consist of Natural Gas Pipeline Company of America, KN Interstate Gas Transmission Company, and KN Wattenberg Transmission Limited Liability Corporation.

(KN Interstate),[20] Questar contends that many pipelines interpreted the term ''interconnecting points'' to include any facility necessary to connect the facilities of two open access pipelines, as long as the cost fell under the dollar ceiling in § 157.208. Questar proposes that the definition be expanded to include any facilities, including piping, compression, metering, etc., necessary to interconnect two open access transporters. Williams suggests that the Commission add ''and associated piping'' after ''interconnecting points'' to recognize in the regulations that some additional piping may be necessary.

Commission Response: We do not believe it is appropriate to expand the definition of eligible facilities to include interconnecting pipeline. In *KN Interstate,* we found that a 2-mile pipeline was not an interconnecting point. The order clarified that an interconnecting point under § 157.208(a) specifically refers to taps, meters, M&R facilities and minor piping. This is consistent with the intent of the blanket certificate, which is to allow pipelines to construct facilities so routine that they have relatively little impact on ratepayers or pipeline operations.

Among others, non-eligible facilities include main lines, extensions of a main line, and any facility, including compression and looping, which alters the capacity of a main line.[21] Thus, while a proposed pipeline facility may be associated with an interconnecting point between open-access transporters, the facility nevertheless is not an eligible facility because it is a mainline connecting two interstate pipelines, not a supply or delivery lateral. The same rationale applies to compression located on any such pipeline. To specifically clarify this point, we will add a new definition as § 157.202(b)(12), Interconnecting point(s), to specifically limit the eligible facilities to the tap, metering, M&R facilities and minor related piping.

Storage Injection, Withdrawal, and Replacement Wells

Comments: Enron, INGAA and Michigan Gas contend that adding the word ''storage'' in the definition of eligible facility, ''needed by the certificate holder to receive gas into its system for further transport or storage'' permits storage injection/withdrawal and replacement wells and associated piping to be constructed under the blanket certificate. They suggest that the Commission explicitly confirm this understanding in its final rule.

Commission Response: The proposal to include such wells under the blanket certificate is part of the ''landowner notification'' proceeding in Docket No. RM98–17–000. As noted there, the Commission is considering expanding the definition of eligible facilities to include replacement or observation wells. However, we expressed concern about whether and how pipelines should be required to acquire consent from the landowner prior to beginning construction.

Maximum Allowable Operating Pressure

Comments: El Paso and INGAA suggest that the Commission allow pipelines to use the prior notice procedures under § 157.205(b) to update or increase the Maximum Allowable Operating Pressure (MAOP) of a lateral when the lateral pressure is less than that of the upstream mainline. El Paso states that increasing the MAOP of a lateral typically is performed for the purpose of providing additional pressure to a distribution customer whose load at a particular delivery point has increased over the years to such an extent that, on cold days, the existing MAOP of the lateral is insufficient to ensure delivery of all of the shipper's volumes. El Paso and INGAA contend that allowing this will eliminate an arbitrary distinction between laterals constructed under section 7(c) and laterals constructed as eligible facilities under the blanket certificate. INGAA notes that any additional capacity created would be posted on the pipeline's EBB. Williams, however, suggests that § 157.208(f)(2) be rewritten to allow this change automatically, instead of under the prior notice procedure.

Commission Response: Currently, pipelines must file a certificate amendment in order to increase the MAOP of laterals constructed under case-specific section 7(c) authority (see § 157.20(g), which was redesignated § 157.20(f) in the NOPR). However, for laterals constructed as eligible facilities under § 157.208 of the blanket certificate, pipelines need only file a prior notice to increase the MAOP (see § 157.208(f)(2)). We agree that there need not be an artificial distinction between updating the MAOP of laterals constructed under individual section 7(c) authority and under § 157.208 blanket certificate authority. Therefore, we intend to modify § 157.208(f)(2) to permit pipelines to follow the prior notice procedures in order to increase the MAOP of laterals constructed under section 7(c).

We disagree with Williams suggestion that any increase in lateral MAOP be allowed automatically instead of under the prior notice procedures. When this section was promulgated in Order No. 234, we required prior notice of any intent to change the MAOP because of the need for safety and reliability of service. These reasons have not changed. Increasing the MAOP of a lateral could have a detrimental effect on interconnections along the facility. For example, receipt point pressures may no longer be great enough to allow gas to enter the lateral. At the other end of the lateral, increased delivery pressures may cause problems for delivery customers' existing M&R facilities. For these reasons, we will not allow a prospective change in the MAOP to be done automatically.

Section 157.202(b)(2)(ii)(B)—Extension of a Main Line

Several parties seek changes to § 157.202(b)(ii)(B), which excludes extensions of mainlines from eligible facility status.

Comments: El Paso, Enron, and INGAA all propose that the Commission modify this section to permit pipelines to construct, as eligible facilities, mainline extensions which are designed to receive gas supplies from another pipeline. These parties submit that mainline extensions, as well as the interconnecting pipe in *KN Interstate* are no different than any supply lateral constructed as eligible facilities.

El Paso Energy recommends that the Commission revise this section so that mainline extensions which enable pipelines to receive gas supplies from a gatherer, intrastate pipeline, or interstate pipeline would become eligible facilities.

Commission Response: This is essentially the same argument earlier raised and rejected to expand the definition of interconnecting points to include any connecting pipeline. For the same reasons, we will not expand the definition of eligible facilities to include mainline facilities, other than the limited exception for replacements as discussed earlier. The Commission excludes mainlines and their extensions from the definition of eligible facilities because they alter mainline capacity and can have a substantial impact on the rates and services a pipeline provides. These facilities are not considered the type of routine construction the regulations contemplated for automatic

[20] 83 FERC ¶ 61,305 (1998).

[21] We are adopting a limited exception to our definition of eligible facilities to allow replacement mainline, lateral, and compression facilities that may result in an incidental increase in mainline capacity.

authorization, without any review by the Commission.

Section 157.202(b)(ii)(D)—Minor Storage Operations

The NOPR revised § 157.202(b)(2)(ii)(D) to extend the blanket authority for tests or other minor storage operations which do not increase certificated, including grandfathered, storage capacity, deliverability or storage boundary.

Comments: Market Hub Partners, L.P. (Market Hub Partners) states that the Commission must ensure that pipelines that own both storage facilities and pipeline facilities are not able to leverage the automatic authorizations to give an unfair advantage to the pipelines' storage facilities.

National Fuel supports the proposal to limit the exclusion of storage facilities from the definition of eligible facilities in § 157.202(b)(2)(ii)(D) because the current definition would exclude even an uprising or minor rerouting of a small diameter storage pipeline.

Commission Response: Initially, we modified § 157.202(b)(ii)(D) to allow minor changes in storage operations that do not alter the certificated capacity, deliverability, or the storage boundary. We did not intend this change to allow, for example, pipelines to drill additional injection/withdrawal wells automatically for the purpose of increasing field deliverability, even though such change would not affect the certificated capacity of the storage field.

We are concerned that ''and'' in the regulation instead of ''or'' will create situations for pipelines to test, develop, or utilize an underground storage field in any manner, as eligible facilities, so long as the action does not increase the certificated storage capacity or boundary of a field. Under existing § 157.215, pipelines can automatically construct and operate pipeline and compression facilities and drill wells for the testing and development of reservoirs, subject to specified spending limits. In modifying this regulation, we intended to allow minor changes to field operations and facilities, such as rerouting or changing storage field lines. We did not intend for pipelines to be able to use this section to drill additional wells as eligible facilities, even if such wells would not change the capacity of a field. As noted above, we are currently exploring the option of allowing pipelines to drill replacement or observation wells under § 158.208 as part of the landowner notification proceeding in Docket No. RM98–17–000. Since we also clarified above that minor storage field changes, including rerouting or changing storage lines, can currently be done under the blanket certificate, we will change our proposal here so that wells must still be drilled under § 157.215. Accordingly, we will revise § 157.202(b)(2)(ii)(D) to state:

> A facility required to test, develop or utilize an underground storage field or that alters the certificated capacity, deliverability, or storage boundary, or a facility required to store gas above ground in either a gaseous or liquefied state, or a facility used to receive gas from plants manufacturing synthetic gas or from plants gasifying liquefied natural gas.

Section 157.202(b)(5)—Small Diameter Laterals

The NOPR proposed to revise § 157.202(b)(5) to remove the phrase ''small diameter lateral'' and add, in its place, the words ''small diameter supply or delivery lateral'' to further clarify what facilities are not considered main line facilities.

Comments: Williams contends that the Commission should adopt a flexible but more definitive description such as replacing ''small'' with ''laterals which have a diameter which is equal to or less than four-fifths the diameter of the mainline to which it connects or from which it extends.''

Commission Response: We decline to adopt Williams' suggestion to modify the definition of ''small diameter lateral.'' The proposed regulation makes it clear that lateral lines are eligible facilities that can be constructed under § 157.208.

Section 157.202(b)(6)—Miscellaneous Rearrangement

While the NOPR proposed no changes to § 157.202(b)(6), Miscellaneous rearrangement of any facility, we received comments suggesting various changes.

Comments: INGAA seeks clarification that replacements done to ensure safety, e.g., when residential, commercial or industrial development has encroached on the pipeline, to comply with environmental regulations, maintain operational integrity or because of erosion, changes in river or stream courses or other forces beyond the pipeline's control, would qualify as eligible facilities. Since these situations require prompt action, INGAA believes that the list of examples should be expanded to include these situations. National Fuel shares the same concern.El Paso wants the Commission to expand the definition to recognize the range of factors beyond a pipeline's control which might require a rearrangement of facilities. El Paso believes that the definition should include any forces, including natural causes, which are outside a pipeline's control, as well as rearrangements conducted at the request of a landowner. El Paso contends that this change would increase flexibility and clear-up the confusion that exists regarding the applicability of the provision.

El Paso Energy recommends that the definition be revised as follows:

> *Miscellaneous rearrangement* of any facility means any rearrangement of a facility that does not result in any change of service rendered by means of the facilities involved, e.g., changes in existing field operations or relocation of existing facilities when (1) requested by the landowner, (2) when required by highway construction, dam construction, erosion, or the expansion or change of course of rivers, streams or creeks, or (3) to respond to other forces beyond the certificate holder's control when necessary to ensure safety, comply with environmental regulations or maintain the operational integrity of the certificate holder's facilities.

Great Lakes argues that off ROW replacement facilities should be allowed under this section. According to Great Lakes, topographical changes due to floods, landslides and other naturally occurring events should qualify under this section. The Commission should clarify that construction resulting from acts of nature are authorized.

Commission Response: We intend that ''other similar reasons'' for miscellaneous rearrangements includes such reasons as maintaining operational integrity or problems due to natural causes such as changes in river or stream courses or other natural forces beyond the pipeline's control. We are excluding encroachment of residential, commercial or industrial development in the definition of miscellaneous rearrangement of facilities because it involves landowner issues. These issues are better addressed in the proceeding in Docket No. RM98–17–000, which discusses many landowner issues in detail. Rearrangement in these instances still require appropriate NEPA review. We will revise § 157.202(b)(6) accordingly.

Section 157.202(b)(10)—Sales Taps/Delivery Points

The NOPR modified § 157.202(b)(10) to remove the words ''Sales tap(s)'' and add in their place, the words ''Delivery points.'' The NOPR also proposed to amend the related § 157.202(b)(2)(ii)(E) to remove the words ''Sales Tap'' and add, in their place, the words ''Delivery points under § 157.211.'' To implement the change to these sections, the NOPR proposed removing existing § 157.212—Changes in delivery points—and revising § 157.211—Sales taps—to become new § 157.211—Delivery points.

Comments: INGAA contends that the definition in § 157.202(b)(10) limits pipelines because it does not include the pipeline associated with the delivery point. INGAA is concerned that the definition limits construction only to facilities at the actual point of delivery, and not to a lateral facility extending to or from those points, which drastically reduces the usefulness of this option. It argues that since delivery points are not installed without any associated piping of some length, the limited definition will reduce a pipeline's flexibility to add new customers, such as electric generation, to the grid, because any such addition will require a section 7 filing.

Duke Energy and Great Lakes propose that the Commission clarify the regulation to avoid confusion so that heaters, minor gas conditioning facilities, treatment, odorization, and similar equipment that may be required on delivery facility installations is covered by the phrase ''appurtenant facilities''.

Great Lakes states that this section should also permit new delivery points for existing customers, not just to attach new customers.

National Fuel states that the definition in § 157.202(b)(10) should be changed to replace ''any customer'' with ''any party.'' In many cases, the owner of the facility to be interconnected with the pipeline is not a customer of the pipeline, but another entity transporting gas for the customer of the pipeline.

Commission Response: Commenters are concerned that the new definition of delivery point either changes the way such facilities can be constructed or changes or limits the type of facilities, i.e., related delivery laterals, that can be constructed. Currently, pipelines must file a prior notice to construct a sales tap under § 157.211 or a delivery point under § 157.212. Since the related delivery lateral is considered an eligible facility, pipelines currently can construct this connecting line automatically under § 157.208, subject to the spending limits in that section. These laterals are eligible facilities because they are specifically excluded from the definition of main line in § 157.202(b)(5).

The Final Rule creates a new § 157.211 to encompass the construction of all delivery points, rather than have two confusing sections to choose between. New § 157.211 allows pipelines to construct virtually any delivery point for both new and existing customers, with the exception of bypass facilities, on an automatic basis, subject to the spending limits in § 157.208. However, the authority for pipelines to construct related delivery laterals remains unchanged, i.e., they are eligible facilities. Prospectively, a pipeline will be able to construct both the delivery point and the related upstream delivery lateral on an automatic basis, subject to the limitations in §§157.208 and 157.211. Thus, for projects that meet the spending limits and do not involve bypass, pipelines are relieved of the burden of making an upfront filing prior to constructing the delivery facilities.

As to Duke Energy and Great Lakes proposal to clarify the definition of ''appurtenant facilities'' in § 157.202(b)(10) to include minor gas conditioning and similar facilities, we agree and will modify the section. We also agree that the reference to ''any customer'' should be modified to refer to ''any party'' to recognize the reality of transportation today.

Section 157.203—Blanket Certification.

The NOPR proposed minor editorial changes.

Comments: The Council questions whether the issuance of a blanket certificate under this subpart constitutes an ''undertaking'' as defined under the NHPA.

Commission Response: The creation of the blanket certificate program was covered by the environmental assessment issued in 1981, which concluded that projects which meet the standard environmental conditions would not have a significant effect on the human environment. The blanket certificate only authorizes projects which adhere to these procedures which, among other things, protect historic properties. The Commission determined that projects which were required to adhere to these procedures would not have an effect on historic properties eligible for the National Register of Historic Places. Therefore, while these individual projects may be undertakings, they do not require the Council's comment.

Section 157.205—Notice Procedures

Section 157.205(d)—Publication of Notice of Request

The NOPR proposed to require that the Commission would issue a notice within ten days of the filing of an application in redesignated § 157.205(d). Process Gas Consumers requests that, among other things, the Commission require pipelines provide more specific notice directly to its customers, as specified in the discussion of § 157.9 above. As stated in our response in § 157.9, we believe the existing notice requirements provide sufficient opportunity for all parties to receive adequate notice of filings with the Commission.

Section 157.205(e)—Protests

The NOPR proposed to amend redesignated § 157.205(e)(2) to add that parties protesting an application in a prior notice filing specifically set out the reasons and rationale for their protest.

Comments: The American Public Gas Association states that the request is reasonable if the potential protestor has all the filed material well before the protest deadline. It argues that it is critical that protestors have the relevant data and the time to analyze the data if they are to file substantive protests.

Commission Response: The NOPR proposed a number of changes, most of which are designed to speed up the processing time for certificate filings by requiring pipelines to file substantially complete applications or face the prospect of having such filings rejected. We note that prior notice applications are usually non-controversial and involve routine activities. It is incumbent upon the pipeline to include all relevant material with the application to ensure that the application will not be rejected. The extended time frame for pipelines to supply voluminous or hard to reproduce materials generally applies to significant transmission facilities that require a separate section 7(c) application. Thus, prior notice filings, by their nature, should be substantially complete when filed, which should allow ample time for interested parties to timely intervene.

In the event that a potential protestor believes that an application does not contain sufficient information for it to justify a protest, it should explain specifically what information is missing and how that affects its ability to protest. If such a situation were to occur, the proposal in the NOPR is not intended to deprive any party of the opportunity to point out the defects in an application.

Section 157.205(g)—Withdrawal or dismissal of protest

The NOPR proposed in redesignated § 157.205(g) to allow the Director of OPR to dismiss any protest to a prior notice filing which does not raise a substantive issue and fails to provide any specific reason or rationale for the objection.

Comments: AGA wants the Commission to clarify that protests alleging that the pipeline's activity will result in a bypass of the LDC will not be dismissed for lack of substance. AGA

proposes that § 157.205(g) and the related § 375.307(a)(10) be revised to state that any protest that alleges bypass will not be dismissed. AGA suggests that the following language be added at the end of each regulation:

However, the Director of the Office of Pipeline Regulation may not dismiss a protest that alleges bypass. Such a protest will subject the request of the certificate holder to the full procedural requirements of the Natural Gas Act under section 7 authorization for the particular activity.

American Public Gas Association expresses two concerns: (1) That the term ''substantive'' is too vague and gives the Director of OPR excessive discretion; and (2) that the relationship of a dismissal of a protest and the effect of a protest is unclear. APGA states that it is not clear that dismissal of a protest prevents conversion of the proceeding to NGA section 7 status. APGA suggests that the Commission forgo these changes.

Duke Energy states that the regulation should be clarified so that a notice of dismissal of protests is issued within the 30 day resolution period. Duke Energy contends that this will eliminate the need for any further order and helps ensure that the prior notice process cannot be used by protestors seeking other unrelated consideration from the pipeline.

Indicated Shippers contends that the proposal inappropriately delegates one of the Commission's most fundamental responsibilities under the NGA to the Director of OPR. It contends that all interested parties must be given a meaningful opportunity to present their positions to the Commission, including the ability to seek a hearing. The Director of OPR must not be placed in position of establishing policy and precedent. Indicated Shippers and NGSA both argue that dismissal of a protest would effectively permit a prior notice to become effective long before the Commission could act on a protesting party's appeal or motion for stay of the dismissal. According to Indicated Shippers, if the Director of OPR keeps this authority, the Commission needs to amend § 375.307(a) because it only authorizes action on uncontested filings. If a protest is filed, a prior notice is contested. Market Hub Partners states that protestors should not have their protest rejected because of deficiencies in pipeline filings or because of delays in noticing filings.

El Paso contends that the standard for determining which protests will be dismissed is vague and expresses concern with how it will be applied. El Paso requests that the Commission clarify that protests which merely raise conclusory allegations without specific factual support may be dismissed by the Director. For example, protests which allege unfair competition or undue discrimination without support should be dismissed. El Paso states that this clarification is necessary to assure that protestors cannot delay projects by merely raising arguments which lack factual support or legal merit.

INGAA and El Paso recommend that § 157.205(g) be revised as follows:

The Director of OPR may make a determination whether protests raise a substantive issue or set forth specific reasons and rationale for the objection, and dismiss the protest for failure to either raise a substantive issue or set forth specific reasons and rationale for the objection.

INGAA states that the authority to dismiss protests for either reason will give the Director broader discretion to dismiss protests while still applying the standards set forth.

Commission Response: The intent of the proposed regulation is to allow the Director of OPR to dismiss any unsubstantiated protest to a prior notice application. Protests that raise legitimate issues will not be dismissed. However, ''no issue'' protests, those that offer no support for the protest, are subject to dismissal. For example, AGA requests that any protest alleging bypass not be dismissed. Simply stating an objection is not enough reason to impede the progress of a prior notice filing. However, if, for example, an allegation of bypass is accompanied by specific reasons and rationale for the objection, then such a protest will not be dismissed. A protestor does not necessarily have to prove that its allegation is true, but it does have to substantiate its objection. This will not deprive any party of an opportunity to present its position to the Commission for consideration. We reiterate, the dismissal pertains only to protests that do not raise a substantive issue and fail to provide any specific detailed reason or rationale for the objection.

As stated, APGA contends that it is not clear how the dismissal of a protest will effect the conversion of the proceeding to a NGA section 7 proceeding. Also, Duke requests that the Commission clarify that the protest will be dismissed during the 30 day resolution period. We clarify that the Director of OPR will dismiss an unsubstantiated protest within 10 days of its filing. However, we will continue to require that the 30 day reconciliation period run for the entire 30 days to allow the protesting party time to pursue other alternatives.

Section 157.206—Standard Conditions

Section 157.206(b)—Environmental Compliance

The NOPR proposed to create a lead-in to the environmental conditions of subpart F in redesignated § 157.206(b) to indicate that the conditions apply only to activities under the blanket certificate that involve ground disturbance or changes to operational air and noise emissions.

Comments: Enron and Williams agree with the proposed clarification, but request that it be codified in § 157.206(b).

Sempra Energy states that it cannot imagine a situation in which blanket activity will not ''involve ground disturbance or changes to operational air and noise emissions.'' It contends that any ambiguity will provide pipelines with incentive to characterize projects as non-ground disturbing to eliminate the notice and protest process and construct facilities. Sempra Energy proposes that the Commission either: (1) eliminate the proposed revision; or (2) clarify that standard environmental conditions continue to apply to all construction, installation, removal, re-work, or repair of facilities.

Commission Response: We agree with Enron and Williams and will modify § 157.206(b) to reflect this clarification. As to Sempra Energy's concern, we reiterate that these conditions apply to all activities performed under the blanket certificate, regardless of cost. Thus, they apply to facilities constructed under the automatic and prior notice procedures. However, we will clarify that the standard environmental conditions continue to apply to all construction, installation, removal, re-work, or repair of facilities performed under the blanket certificate.

Section 157.206(b)(5)

The NOPR proposed to revise redesignated § 157.206(b)(5) to bring it into line with current usage concerning limitations on compressor station noise levels.

Comments: Duke Energy, El Paso Energy, INGAA, and Williams all want the Commission to clarify whether any change to a single compressor unit or adding a new unit requires the noise level of the entire compressor station to be reduced to 55 dB(A). They are concerned about the terms ''modified, upgraded, or uprated.'' These parties contend that the language implies that almost any modifications to individual compressor units will force other previously approved units in the same station to meet the 55 dB(A) noise limits, even if no modifications to these

units are performed. They believe such a result would be at odds with current Commission policy, which requires pipelines to maintain compressor stations at existing levels when any changes are made. These parties request that the Commission clarify the 55 dB(A) noise level is applicable only to the individual unit being added, modified, upgraded, or uprated and not to the entire compressor station which was previously installed.

Commission Response: Our intent was to have the noise limit apply to the new or modified compressor units. We will modify § 157.206(b)(5) to reflect this intent.

Section 157.206(c)—Commencement

The NOPR proposed to revise redesignated § 157.206(c) to allow for facilities to be completed ''and made available for service'' instead of ''in actual operation'' within one year of authorization.[22]

Comments: El Paso Energy and INGAA agree with the proposal, but request that the annual report required in § 157.208(e)(2) be modified to reflect the change here.

Commission Response: The Commission is concerned with the actual completion date of projects constructed under the blanket certificate for, among other things, environmental review purposes. However, we are also concerned with the date service commences. Changing the reporting requirements so that facilities will not be reported until they are ''available for service'' could result in delays in both reporting and review. While facilities could be ''completed and made available for service'' within the specified timetable, service may not commence at that time if the end-user/shipper is not ready to flow gas. Since the annual report in § 157.208(e)(2) currently requires the actual date that construction was completed, we will modify the report to also require the date service commenced.

Section 157.208—Construction, Acquisition, Operation, and Miscellaneous Rearrangement of Facilities.

Section 157.208(a) and (b)

Consistent with our proposed change to the definition of an eligible facility in § 157.202(b)(2)(i), the NOPR clarified that §§ 157.208(a) and (b) will now include certain replacement facilities that do not qualify under revised § 2.55(b).

Comments: INGAA requests clarification that rearrangements of storage lines will also be included in this section as the practical process is the same whether a pipeline is rearranging mainline pipe or storage pipe.

Commission Response: It appears that INGAA wants a clarification of the definition of miscellaneous rearrangement of any facility. The definition does not specifically limit the rearrangement to mainline versus lateral or storage lines. It limits the reasons for the rearrangement. Storage lines, as well as mainlines can be rearranged as eligible facilities under this section, so long as the rearrangement qualifies under the definition in § 157.202(b)(6).

Section 157.208(c)(9)

The NOPR proposed to amend redesignated § 157.208(c)(9) to add the specification that a copy of consultations for the Endangered Species Act, the National Historic Preservation Act, and the Coastal Zone Management Act be included in any prior notice filing made under this section.

Comments: The Council asks the Commission to describe what constitutes ''clearance'' and how can it be obtained by the certificate holder given the Commission's nondelegable responsibility.

INGAA states that the preamble to the NOPR requires a copy of consultations, while the regulation requires a copy of the clearance received at the time a prior notice is filed. INGAA wants the Commission to clarify whether the final clearance is required or whether just the copy of consultations is required. If the final clearances are required, INGAA contends that this does not reflect the realities of dealing with the various permitting agencies involved. While understanding the Commission's need to verify that clearances have been obtained before the prior notice period runs, INGAA suggests that pipelines file requests for clearances at the time of the prior notice and supplement with actual clearances when received. Enron and Great Lakes raise the same concern and request that actual clearances be filed within 30 days. If clearances are not received by the close of the protest period, the Commission could deem the prior notice protested. INGAA proposes the following language:

> A copy of the clearance received or the request for clearances for Endangered Species Act, the National Historic Preservation Act and the Coastal Zone Management Act shall be included in any prior notice filing. If a request for clearance is filed, then a copy of the final clearance must also be filed, when received. Failure to file the final copy by the end of the protest period will deem the prior notice filing protested.

Commission Response: As to the Council's request, we will change the word ''clearances'' to ''agreements.'' We have already addressed the issue of delegation when we said that projects which comply with the standard conditions do not constitute undertakings which would affect historic properties.

As to INGAA's request, we clarify that the reference to a copy of consultations means a final agency agreements. Prior notice filings, by definition, are for those projects on which the company could begin construction within 45 days from the filing date. As a result there is no justification for allowing the company to file a prior notice without already having the agreements.

Section 157.208(e)

Section 157.208(e) details the annual reporting requirements for facilities completed under this section. The NOPR proposed to revise this section to require complete reports only for facilities constructed under the automatic authority conferred by § 157.208(a).

Comments: INGAA requests that the Commission clarify whether pipelines are required to identify facilities constructed under prior notice procedures and the cost levels of such facilities in their annual report in § 157.208(e).

Commission Response: Pipelines are still required to identify such facilities and to provide the complete cost information required in § 157.208(e)(3). However, because the prior notice application includes all the information regarding the facility, the only identification necessary would be the docket number of the prior notice that authorized construction. We note that this action reduces the reporting burden on all pipelines.

Section 157.209—Temporary Compression Facilities

The NOPR proposed to create a new § 157.209 to allow blanket certificate holders to install temporary compression for the limited purpose of maintenance or repair of existing permanent compressor unit(s).

Comments: El Paso Energy and INGAA want the Commission to clarify that pipelines can operate temporary compressors occasionally for maintenance purposes to ensure that the compressors will perform up to specifications when needed, including complying with the 55 dB(A) noise level. INGAA argues that, in cases of

[22] See the related discussion of a similar change in § 157.20(b).

routine maintenance, pipelines should be able to install a temporary engine while repairing a permanent engine, or install a spare engine in place of the engine that is removed for repair. INGAA recommends that these activities be permitted as maintenance under this section.

Commission Response: We will grant the clarification. It is consistent with the intent of this section and will help ensure the reliability of certificated entitlements in the event of compressor problems.

Section 157.211—Sales Taps

The NOPR proposed to redefine this section as Delivery points and provide for automatic and prior notice authorization to acquire, construct, replace, modify, or construct any delivery point.

Construction of Delivery Points

Comments: Enron and INGAA state that the NOPR describes receipt points as being constructed under § 157.211, while the proposed regulations indicate that receipt points are eligible facilities to be constructed under § 157.208.

Commission Response: The Commission agrees with Enron and INGAA that the intent is for receipt points to be constructed automatically as eligible facilities under § 157.208, subject to the spending limits. Section 157.211 would cover receipt points that prospectively will function as delivery points as a result of unbundling. The ''and vice versa'' in the preamble to the NOPR was inadvertent. We clarify that delivery points will not actually be converted into receipt points under § 157.211.

Definition of End-User

In § 157.211(a)(2), the NOPR required prior notice of the construction of a delivery point where the gas is being ''delivered to, or for the account of, an end-user that is currently being served by an LDC.''

Comments: National Fuel requests that the Commission revise § 157.211(a)(2)(i) to read instead where the gas is being ''delivered directly to an end user'' to clarify that delivery into an LDC facility that feeds an end user could be undertaken automatically under § 157.211(a)(1).

Commission Response: In a situation where a pipeline delivers gas directly to an LDC, which then redelivers the gas to an end-user, the LDC performs a transportation function and is not bypassed in such a transaction. Accordingly, under that situation, automatic authorization is appropriate.

Prior Notice Requirement for Bypass

Comments: AGA and Sempra Energy note that the regulations do not specifically mention ''bypass'' and that a prior notice is only required when a customer is ''currently being served'' by an LDC. AGA believes that ''currently being served'' is sufficiently ambiguous that pipelines could evade the prior notice requirements, even where an LDC is being bypassed. AGA suggests that the Commission change § 157.211(a)(2)(i) to add: ''currently being served'' includes circumstances where the customer is attached to the LDC even if it is not currently taking gas. AGA also requests that the Commission modify § 157.205 to require that the pipeline notify both the LDC and the state utility commission of any bypass activity. AGA also requests that the Commission define bypass to include situations where the pipeline proposes to serve a customer within the LDCs' service area, even if the LDC previously has not served that customer.

On the other hand, Process Gas Consumers (PGC) argues that the Commission should eliminate the use of prior notice for all delivery points, including new delivery points for end users served by LDCs. PGC states that the Commission's policy is well established and consistent with principles of nondiscriminatory access. According to PGC, end users and LDCs are equally entitled to new delivery points, including ones that bypass traditional suppliers. If a pipeline violates a Commission policy, PGC states that it is subject to a complaint under NGA section 5. PGC further states that if the customer violates any contract with an existing supplier, it faces a contract remedy. PGC also argues that direct service to an end user should also be automatic if the contract has expired or will expire by the time service from the new delivery point commences.

PGC also wants the definition of delivery point in § 157.202(b)(10) expanded to include new and additional service to a customer, whether or not at the same location. For example, an industrial user installing a second plant should be entitled to treat the new installation as new service and should be able to obtain a delivery tap automatically. The end user should not be subject to protests and delays because it continues to receive service for the remainder of its operations from its existing LDC. New service, beyond the existing LDC service should entitle the end user to obtain a delivery tap under the automatic procedures.

Commission Response: The Commission has previously determined that a bypass does not occur when a pipeline proposes direct service to a new customer that is not currently being served by an LDC under an LDC contract.[23] The purpose of 157.211(a)(2)(i) is to provide notice to an LDC of a potential bypass. This is consistent with our current bypass policy, which we apply on a case by case basis, and see no basis to change that policy. This policy requires that a nexus be shown between the LDC's obligation to purchase service from the pipeline and the pipeline's proposed service to the end-user. Our policy is not to engage in speculation as to an LDC's market, nor second guess end-users'' choices.

As stated, PGC argues that adding delivery points to serve end-users should be allowed under the automatic authorization. We disagree. We see no reason to modify our policy to provide an LDC currently providing service to an existing customer notice of a potential bypass. To the extent that a pipeline wishes to add a delivery point for a customer where the affected contract with the LDC has expired, the pipeline may add the delivery point under the automatic authorization. However, the existing firm contract must expire prior to the construction of new delivery facilities in order not to constitute a bypass.

Further, we note that the regulation requires prior notice whenever the facilities are constructed to serve a customer currently being served by an LDC. This includes a delivery point to provide additional volumes to that customer. We believe that the LDC should have notice that such facilities are proposed to be built.

CD Reductions

Comments: AGA, the Joint Consumer Advocates,[24] and Rochester Gas and Electric Corp. (Rochester) urge the Commission to permit LDCs to reduce their contract demand to the extent pipelines bypass their facilities. The current policy predicates any CD reduction on a contractual nexus between the capacity and the bypassing LDC customer. However, these parties contend that LDCs often do not have service agreements with their customers

[23] *See* K N Interstate Gas Transmission Company, 85 FERC ¶ 61,327 (1998), Texas Eastern Transmission Corporation, 71 FERC ¶ 61,020 (1995), and Mojave Pipeline Company, 69 FERC ¶ 61,921 (1994).

[24] The Joint Consumer Advocates consist of the Pennsylvania Office of Consumer Affairs, the Iowa Office of Consumer Advocate, and the West Virginia Consumer Advocate Division.

and most do not deliver specific quantities to end-users. Instead, LDCs provide retail service for whatever requirements the customer needs. The LDC tariffs become the contract when service commences. Moreover, they claim that the Commission's standard is overly restrictive and fails to reflect current market realities.

Commission Response: In Order No. 636, the Commission stated that it would consider requests by LDCs for relief from pipeline bypass. Where an LDC could show a nexus between the bypass and the costs at issue, the Commission stated that it would consider reducing the LDC's contract demand and reservation charges.[25] Determining if CD reductions are justified is dependent on the facts and circumstances in each particular case. Any challenges to the Commission's current policy should be made on a case by case basis. The parties have not provided any compelling reason that would warrant the Commission's changing its current policy in the context of this rulemaking proceeding. We note that the proposed regulation keeps the existing policy in place, so if a prior notice is protested on the issue of bypass, these points can be examined as they are now.

Tariff Must Permit Addition of Delivery Point

Comments: PGC also seeks to have the Commission eliminate the requirement in §§ 157.211(a)(1)(ii)and (a)(2)(iii) that the certificate holder's tariff does not prohibit addition of new delivery points. PGC contends that since Order No. 636, no pipeline's tariff should prevent the construction of delivery points. The proposed language is so broad that, notwithstanding creditworthiness provisions, pipelines could refuse to construct for policy or other reasons, which PGC argues is against open access provisions.

Commission Response: A pipeline's tariff sets the parameters under which it will construct delivery points. Any construction of new delivery points need to be consistent with the terms of the pipeline's tariff. Pipelines cannot structure their tariffs to impede constructing delivery points and are required to provide non-discriminatory, open access service. Part of this service is constructing delivery points for shippers. While we never said that pipelines had to build facilities, if a pipeline does build facilities for one customer, it must build facilities for other similarly situated customers on a non-discriminatory basis.[26] We recognize that there may be certain economic parameters in a tariff, including creditworthiness, that shippers may need to comply with in order for a pipeline to construct a new delivery point. However, a pipeline must have a legitimate reason not to construct facilities for shippers that request them. While we will not eliminate the requirement in §§ 157.211(a)(1)(ii) and 157.211(a)(2)(iii) that ''the certificate holder's tariff does not prohibit the addition of new delivery points,'' pipelines must not use their tariffs as a shield when they are requested to construct facilities. Shippers that believe that they have been unfairly denied a new or additional delivery point can file a complaint with the Commission detailing the adverse action.[27]

Prior Notice Requirement for Full Pipelines

Comments: According to APGA, attaching new customers to a full or nearly full pipeline potentially affects the operating flexibility and service to all existing firm customers. APGA does not object to construction of new delivery points for existing customers where overall pipeline firm obligations are not increased. However, before new customers are added to a pipeline, APGA contends that there should be prior notice and opportunity to protest, because the quality of existing service is at issue when new customers are added.

Commission Response: APGA wants to limit the automatic construction of delivery points to existing customers, not new customers being added to the system because of the potential service impact on others. One of the purposes of the blanket certificate is to expedite construction of minor facilities that will not have a significant impact on ratepayers. This is accomplished in part by limiting the cost of certain facilities and requiring that service through such facilities is provided within existing certificated volumes. However, the Commission recognized that the blanket certificate issued under part 284 certificates transportation of gas using available capacity on a first-come, first-serve basis. In other words, transportation provided under a part 284 blanket certificate is within certificated volumes and pipelines holding a part 157 certificate are authorized to construct any eligible facilities to provide transportation authorized under a part 284 blanket certificate. Thus, nothing prevents a pipeline from constructing new delivery points in accordance with this section to accommodate additional service to any customer, so long as the service is supported by a related transportation agreement under part 284. However, pipelines cannot contract for service that depends on firm capacity reserved for others.

Meter Facilities

Comments: Williams suggests that § 157.211(a)(1) be revised to recognize situations where a replacement or modification to meter facilities involves a reduction in measurement capacity to accommodate the need for greater accuracy. This would avoid confusion when a customer's load is reduced at one delivery point, but there is no overall reduction in customers total capacity.

Commission Response This section already allows pipelines to ''modify'' any delivery point, which would apply to the situation Williams describes.

Lateral Associated with Delivery Points

Comments: Great Lakes states that the new definition of delivery point precludes construction of associated lateral lines. According to Great Lakes, this is a step backwards since certain limited-length lateral lines can now be constructed as part of the delivery point prior notice procedure. Great Lakes contends that the Commission should allow lateral lines associated with new delivery points to be constructed on a self-implementing basis, unless bypass is involved.

Commission Response: We addressed this argument in our discussion of § 157.202(b)(10). There we explained that the delivery point itself and related facilities can be constructed under § 157.211, while the connecting lateral would qualify as an eligible facility and generally be constructed automatically under § 157.208.

Section 157.215 Underground Storage Testing and Development.

This section provides automatic authorization, subject to certain conditions, for the construction and operation of pipeline and compression facilities to be used for the testing and development of underground reservoirs for the possible storage of gas.

The NOPR proposed to require the certificate holder to identify the date construction began in revised § 157.215(b)(1)(iii).

Comments: INGAA and National Fuel propose that the section be revised to

[25] See Texas Gas Transmission Corp., 70 FERC ¶ 61,207 (1995).

[26] *See Missouri Gas Energy* v. *Panhandle Eastern Pipe Line Company*, 75 FERC ¶ 61,166 at 61,550 (1996).

[27] *See Arcadian Corporation* v. *Southern Natural Gas Company*, 55 FERC ¶ 61,207 (1991), reh'g 61 FERC ¶ 61,183 (1992).

reflect the Commission's current policy, which allows pipelines to acquire facilities and recognizes that they can currently drill injection/withdrawal and observation wells when testing and developing storage fields.

Petal Gas Storage Company (Petal) states that the Commission should clarify that the scope of the blanket certificate allows for the construction of salt dome storage caverns under the automatic and prior notice provisions of § 157.208. Alternatively, if both the construction and operation of a new salt dome cavern currently requires formal section 7(c) authorization, Petal argues that the Commission should at least permit the construction of the cavern (drilling and leaching) and installation of related facilities (flow lines) under blanket authorization, while operation of the additional facilities is considered in a separate section 7(c). If the Commission does grant either of these requests, the Commission should clarify that salt dome storage facilities are included within the scope of storage facilities eligible for automatic authorization under §157.215, or create a new provision to allow for automatic authorization for certain activities, such as drilling a well, leaching, and testing a cavern, that are necessary to develop a salt dome storage cavern.

Commission Response: We agree with INGAA that specifically including well work and acquisition of facilities would clarify the scope and intent of this section. We will modify § 157.215(a) accordingly. We note that whatever policy might be adopted in the landowner notification proceeding in Docket No. RM98–17–000 would apply to any construction under the blanket certificate, including this section.

We do not agree with Petal about automatic or prior notice authorization for the construction and development of solution-mined salt cavern storage. Construction, testing, and development of conventional storage fields (depleted gas or oil field and aquifer) generally requires more than three years for different testing and development phases to verify various storage parameters. Moreover, a conventional storage field developed pursuant to this authorization cannot be placed in operation to render storage services in interstate commerce without further Commission evaluation and authorization.

In contrast to a conventional storage field development, all aspects of a solution-mined underground gas storage facility, which will be created through the planned leaching of a naturally bedded or domal salt formation, is designed before drilling and leaching. This includes selecting an appropriate site, physically developing the cavern and testing and commissioning the cavern. It also involves environmental impacts different than those related to the construction, testing, and development of conventional storage fields. Therefore, certification of salt cavern storage facilities is more similar to construction of mainline pipeline transportation facilities than to the development of a conventional underground storage facility. This section will not provide for either automatic or prior notice authorization for the construction and development of solution-mined salt cavern storage.

Section 157.216 Abandonment

Section 157.216(a)

The NOPR proposed a new § 157.216(a)(1) to specifically reference that receipt point facilities are eligible for automatic abandonment authorization under the subpart F blanket certificate.

The NOPR also proposed to expand the automatic authority under § 157.216 to allow abandonment of: (1) Delivery points used to provide firm and interruptible service, if the points are unused for 12 months and no longer under a firm contract, and (2) any eligible facility constructed under automatic authority, subject to customer consent.

Customer Consent and Automatic Authorization

Comments: INGAA is concerned about the requirement to obtain written consent from all customers who have received service in the past 12 months. Abandonment of a tie-over on a mainline or some facilities at an interconnection with another pipeline could be very burdensome because of the sheer number of customers that could be affected. INGAA proposes to allow abandonment of eligible facilities if it will not terminate or degrade service to such existing customers. This protects customers without an unnecessary administrative burden.

National Fuel states that receipt and delivery points should qualify for automatic abandonment if affected customers consent, regardless of whether the facility was used in the past 12 months.

AGA wants the Commission to clarify that primary delivery points under contracts are not eligible for automatic abandonment, even if they have not been used in the past 12 months.

Indicated Shippers and NGSA state that the proposals to allow pipelines to abandon receipt points automatically and by prior notice could permit pipelines to abuse the ability to abandon service to a point. They suggest that the abandonment of all supply facilities be subject to prior notice, regardless of cost. They contend that without prior notice, upstream suppliers and other parties behind the facilities could become stranded, causing shut-in and possible loss of reserves. According to Indicated Shippers and NGSA, the proposed written consent applies only to transportation customers, not upstream supply parties, including producers, pooling parties, balancing parties and point operators that may also deliver gas into the subject facilities. These parties may have Operational Balancing Agreements (OBA) or other agreements with the pipeline that conform to a pro forma agreement in the pipeline's FERC Gas Tariff. Given the cost level for automatic abandonment, Indicated Shippers requests that the Commission clarify how it intends to determine the cost of eligible facilities serving a supply function for purposes of automatic abandonment. Indicated Shippers and NGSA argue that prior notice for such facilities protects against inappropriate abandonment of jurisdictional facilities.

Both Indicated Shippers and NGSA request that the Commission clarify that the term ''customers'' (for purposes of abandonment under the blanket certificate) includes: (1) Upstream producers and other suppliers that (a) have confirmed a nomination at the point in the previous 12 months or (b) are not currently using the facilities, but have within the previous 12 months made a request to the pipeline in writing for firm or interruptible service using specific supply facilities; (2) point operators; (3) gatherers; (4) pooling parties; or (5) OBA parties. Indicated Shippers argues that the Commission should require written consent of these affected upstream parties in addition to the capacity holders in the facilities.

These parties contend that without this clarification, the new regulations could be interpreted to allow a pipeline to abandon those facilities using prior notice without the consent of the affected parties behind the upstream supply facilities, if those parties do not ship gas from the point under their own transportation agreements with the pipeline. Unless upstream parties are considered customers, even a protest would be illusory since consent is only needed from ''customers''.

Commission Response: INGAA believes that seeking customer consent will be administratively burdensome if numerous customers use a facility proposed to be abandoned. INGAA

suggests that abandonment be allowed as long as it will not terminate or degrade service to existing customers. However, INGAA does not specify how it will determine that abandonment of any facility will not terminate or degrade existing service.

It is the Commission's statutory responsibility to ensure that abandonment of any facility is permitted by the present or future public convenience and necessity. In order to meet this responsibility, the Commission will require pipelines to demonstrate that service will not be degraded or terminated, or that service is no longer needed through a specific facility by providing consent from customers that have received service during the past 12 months. While there may be certain instances where this requirement could create a burden, we believe that our statutory responsibility under NGA section 7(b) outweighs any such potential administrative inconvenience.

National Fuel argues that abandonment should be automatic for receipt and delivery points, if the affected customers agree, regardless of when the facilities were last used. National Fuel can use § 157.216(a)(2) to abandon receipt points automatically, since they are eligible facilities, as long as it has all the customers' consent, regardless of whether the receipt point was used in the past 12 months. However, delivery points are not eligible facilities because of potential bypass situations and therefore, are not covered by § 157.216(a)(2). The Commission determined that expanding the automatic abandonment authority was appropriate only if the customer who used the facilities during the preceding 12 months consented to such action. Therefore, we will continue to require a prior notice filing for delivery point facilities which were in use during the last 12 month period specifically because we are concerned with the potential for existing customers to lose access to facilities. We believe that any perceived delay involved in filing a prior notice is offset by the protection the procedure gives customers.

As we stated in the NOPR, the Commission does not intend to allow automatic abandonment of delivery points used for firm service that are under contracts that are in force and effect, because parties paying demand charges should retain the availability of those points.

As stated, Indicated Shippers argues that gas suppliers, point operators, gatherers, pooling parties, and OBA parties upstream of receipt points and gas supply facilities should be included as customers from whom consent is required prior to facilities being abandoned automatically. The Commission believes that its proposal to allow automatic abandonment of receipt or delivery points that have not been used for a one year period provided it is no longer controlled by a firm contract is appropriate. Pipelines should have the flexibility to abandon facilities that are no longer used and useful. To the extent that upstream suppliers do not have contract agreements with the pipeline but, instead, have gathering, pooling, balancing, or some other type agreement with the pipeline's shippers, they should seek the appropriate remedy under those contracts. We note that pipelines are not designed to stand by without charging for service.

Sections 157.216(d) (4) and (5)

The NOPR proposed to modify § 157.216(d)(4) and add new § 157.216(d)(5) to require that pipelines supply: (1) The date earth disturbance related to an abandonment began, and (2) the date clearances were actually received under the Endangered Species Act, the National Historic Preservation Act, and the Coastal Zone Management Act.

Comments: Michigan Gas Storage contends that clearances under the National Historic Preservation Act should not be required where the same earth that was disturbed for construction is redisturbed for abandonment. It states that paragraphs (d) (4) and (5) should be limited to abandonment of facilities where there is earth disturbance beyond the earth disturbance involved in the original construction.

Commission Response: If there is no ground disturbance or if the disturbance is similar to the previous ground disturbance, the report might consist simply of the applicant's statement that there is no ground disturbance or the SHPO agreement that the ground disturbance does not constitute a concern. However, since it is difficult to ascertain the many situations that could arise and the many exceptions possible, the Commission will still require that the applicant obtain agreement from the appropriate SHPO in order to avoid the requirement for a more detailed report. Of course, as with all the resource reports, the option is there to explain the absence of material based on the nature of the project. It will then be up to the staff to determine if the reason is adequate.

Section 157.217—Changes in rate schedules

The NOPR proposed to remove this section, which provides pipelines with automatic authority to permit customers to change rate schedules.

Comments: Duke Energy believes that if a pipeline and its customer both desire to convert to part 284 service, they should be able to do so on an automatic and mutually agreeable basis, so long as it is non-discriminatory. Duke Energy understands that the Commission has limited its interpretation of this section in the past, citing *Northwest Pipeline Company*.[28] However, it believes that the regulation should continue and be clarified to allow section 7(c) customers to convert to part 284 service. Such a conversion would be consistent with Order No. 636.

Commission Response: We agree. The Commission's policy is to foster conversion from individually certificated transportation and storage to open access transportation and storage. Therefore, we will revise § 157.217 to specifically provide that pipelines can change rate schedules, at a customer's request, for the purpose of converting part 157 transportation or storage service to a complementary part 284 service. This section will provide automatic abandonment authorization for the part 157 transportation service, obviating the need for pipelines to file separate abandonment applications. However, pipelines will need to make a filing to reflect removal of the part 157 rate schedule from their tariff. We will also grant a generic waiver, to the extent necessary, to allow the converting shipper to retain its existing capacity through the conversion. We will also require that the rate the shipper will pay after conversion to part 284 will reflect all the maximum rates and charges associated with the service.

Appendix II to Subpart F—Procedures for compliance with the National Historic Preservation Act of 1966 under § 157.206(d)(3)(ii)

The NOPR proposed minor editorial revisions, such as changing the reference in the title from ''§ 157.206(d)(3)(ii)'' to ''§ 157.206(b)(3)(ii)''.

Comments: The Council made several comments relating to the inclusion of interested persons in the regulations for complying with cultural resources requirements. Specifically, it said that involvement of interested persons needs to be clarified in Appendix II. It said that appendix II does not offer any

[28] 49 FERC ¶ 61, 162 (1989), reh'g denied, 50 FERC ¶ 61, 200 (1990).

explicit guidance on consultation with interested persons. In particular it doesn't specifically refer to the authority given to certain tribes to take over the function of the SHPO on their lands. Further, in reference to § 380.12(f), since the rule does not explicitly provide for the involvement of interested persons in the development of mitigation/treatment, the project sponsor could propose a Treatment Plan, inappropriately, without consultation with any interested persons. Finally, the Council argues that the rule does not go far enough in providing a consultative role for interested persons, since § 380.14(a) states only that the Commission will ''take into account views of interested parties.''

Commission Response: With respect to appendix II, to better indicate tribal authority we will modify the first sentence of paragraph 1(a) to read: ''* * * procedures used by the appropriate Tribal or Federal land managing agency * * *'' In addition reference to the Tribal Historic Preservation Officer (THPO) should be added in most parts of the regulation referring to the SHPO. We will add reference to the THPO as appropriate, including a new definition of THPO in appendix II: ''(d) ''THPO'' means the Tribal Historic Preservation Officer.'' And in paragraph (1)(b) ''If there is no SHPO or THPO, if appropriate, or if the SHPO or THPO, as appropriate, decline to * * *''. Similar changes have been made to paragraphs (3) through (9).

We disagree with the Council and believe that the rule, in general, adequately provides for the involvement of interested parties. The rule references OPR's ''Guidelines for Reporting on Cultural Resources Investigations'' and the pertinent sections—III.B.2., IV.A, V.B.12, VI.B.3., VI.C., VII.C., VIII.D., which provide for public participation throughout the process. In addition, the Commission's environmental process, which includes sending out Notices of Intent, holding scoping meetings, and issuing Environmental Assessments or Environmental Impact Statements, allows us to explicitly solicit comments from any potentially interested persons regarding cultural resources.

With respect to Treatment Plans, as we have already stated, the guidelines do indicate the need to involve interested persons. However, there would be nothing wrong with an applicant proposing such a Treatment Plan since the Commission's environmental process would ensure the involvement of interested persons in the formulation of the ultimate Treatment Plan to be used. The applicant's plan is merely a starting point.

While a company can file a Treatment Plan in resource report 4 (§ 380.12(f)), they don't have to. The guidelines at section VIII.D provide for review of a Treatment Plan by interested persons even if the Treatment Plan is filed with the Commission early in the process.

Appendix II—Paragraph (7)

Comments: The Council contends that the citation in paragraph (7) to 36 CFR § 800.3(a) should be to 36 CFR § 800.9 instead.

Commission Response: We agree the reference should be changed. However, we believe a more appropriate reference is to 36 CFR § 800.5 rather than 36 CFR § 800.9. Under the current Council regulations, § 800.5 ''Assessing effects'' references § 800.9 applying the ''Criteria of Effect and Adverse Effect,'' accomplishing the effect the Advisory Council is seeking.

Appendix II—Arbitration

Comments: The Council states that Appendix II does not provide for arbitration of disputes or cases where the SHPO may choose not to consult with the project sponsor.

Commission Response: This is not correct. Paragraph 1(b) specifically deals with the case where the SHPO declines to consult. If there is a dispute that can't be resolved, then the project is not authorized under this program, and the only way it can proceed is through the standard certificate process (see paragraph (9)). There was no intent to provide for arbitration of a project the Commission may not be aware of prior to construction.

D. Part 284—Certain Sales and Transportation of Natural Gas Under the Natural Gas Policy Act of 1978 and Related Authority

Part 284 sets forth the general provisions and conditions that govern certain sales and transportation of natural gas under the NGA and the NGPA.

Subpart J—Blanket Certificates Authorizing Certain Natural Gas Sales by Interstate Pipelines

Section 284.288—Reporting Requirements

This section sets forth the annual reporting requirements for an interstate pipeline making sales under this subpart. Blanket sales certificates were issued to interstate pipelines in Order No. 636. The NOPR sought comment on whether the information required by this section is still necessary or whether it has become obsolete, leading to removal of the section from the regulations.

Comments: Indicated Shippers argues that the requirement is far from obsolete and should be retained, since the circumstances leading to imposing the reporting requirements remain a reality. Interstate pipelines continue to maintain monopoly control over gas transportation. Thus, there is no basis for eliminating this requirement. Indicated Shippers contends that the information is necessary to determine if the pipeline is exercising market power. The requirement acts as a deterrent to unlawful conduct that otherwise would go unreported.

Conversely, National Fuel and Williston Basin support discontinuing the reporting requirement.

Commission Response: We no longer place the same emphasis on this report as we did when it was implemented. We believe that eliminating this report will not have a detrimental impact on the customers of any pipeline engaging in unbundled sales under subpart J of part 284. Pipelines engaging in such sales are fully unbundled and have in place system transportation rates that reflect their cost of service. These transportation rates will not be affected by any unbundled sales a pipelines makes under subpart J. Therefore, in the interim, the volume of any such sales and the associated revenue will not impact the rates customers currently pay for service. When a pipeline files a section 4 proceeding, the information related to subpart J sales will be set out in the pipeline's Statement G, §§ 154.312(j) (i) and (ii), which require, among other things, revenues and billing determinants by rate schedule and customer name. It is in the context of a rate case that the costs associated with any unbundled sales can be scrutinized.

E. Part 375—The Commission

Part 375 sets forth the general provisions of the Commission, the procedures for Sunshine Act meetings and delegations of authority.

Subpart C—Delegations

Section 375.307 Delegations to the Director of the Office of Pipeline Regulation.

Sections 375.307(a)(1) and (a)(4)

The NOPR proposed to increase the $5,000,000 spending limit to match the prior notice limits set forth in § 157.208(d).

Comments: AGA requests that the Commission expressly preclude pipelines from segmenting their projects to meet this spending threshold. AGA

suggests that this section be revised to include:

''An applicant must certify that the proposed project has not been improperly segmented in order to meet the spending limit specified in § 157.208(d).''

Commission Response: We reiterate that updating and broadening the certificate regulations is designed to facilitate the filing of more complete applications and to provide faster processing of applications once they are filed. We do not intend for these changes to provide opportunities for pipelines to circumvent the intent of our regulations and policies. However, rather than revise the delegation of authority regulations, we will instead revise the blanket certificate regulations. Therefore, we will revise section 157.208 to specifically state that pipelines shall not segment projects in order to meet the spending limits in § 157.208(d).

Section 375.307(a)(3)

The NOPR proposed to remove an obsolete condition in § 375.307(a)(3), which delegates abandonment authority to the Director of OPR for gas purchase facilities with a construction cost of less than $1 million or the deletion of delivery points.

Comments: NGSA requests that this section be modified to take into account the financial and operating interests of upstream producers, gatherers and point operators attached to facilities proposed to be abandoned. NGSA raises the same argument it raised regarding a similar proposal to modify the abandonment of receipt points under § 157.216.

Commission Response: For the same reasons set forth in our answer in § 157.216, we will deny this request.

Section 375.307(a)(10)

The NOPR proposed new § 375.307(a)(10) to delegate to the Director of OPR the authority to dismiss protests to prior notice filings that the Director determines do not raise a substantive issue and fail to provide any specific detailed reason or rationale for the objection.

Comments: Sempra Energy states that the Commission should recognize that not all applications have merits and that opponents or protestors may not have adequate information at the time of protest to prevent dismissal of their protest. This delegation calls for legal conclusions by the OPR Director rather than factual holdings or ministerial action on routine matters and is not truly appropriate for delegation.

Commission Response: As we noted earlier, the authority delegated to the Director of OPR to dismiss protests is intended to apply only to situations where unsubstantiated allegations are raised, and only applies to such protests filed in response to prior notice applications filed under § 157.205.

F. Part 380—Regulations Implementing the National Environmental Policy Act

The regulations in Part 380 implement the Commission's procedures under the NEPA. These regulations supplement the regulations of the Council on Environmental Quality (CEQ), 40 CFR parts 1500 through 1508 (1986). Part 380 essentially follows the CEQ procedures concerning early and efficient review of environmental issues, public notice and participation, scoping, interagency cooperation, comments, and timing of decisions on proposals.

Section 380.12—Environmental Reports for Natural Gas Act Applications

The NOPR proposed to replace part 380 appendix A (guidelines for the environmental report), which is out of date and contains numerous errors, with the currently optional appendix G resource reports in the electronic filing requirements, which virtually all companies are now using instead of appendix A. In § 380.12 the NOPR listed, in detail, the information the Commission needs to conduct an environmental review of a proposal under NEPA. The NOPR proposed that applications not meeting a minimum specified portion of these requirements will be rejected.

Mileposts and Map Checklist

Comments: National Fuel states that all references to mileposts in this section should be revised to permit the use of conventional survey centerline stationing if available. Most companies use field survey, stake and mark pipeline centerlines using conventional survey stationing, which National Fuel contends is far more accurate than mileposts. They assert that survey stationing provides a discrete location identified for each feature within each milepost. National Fuel argues that companies should not be required to convert conventional survey stationing references to mileposts merely to file applications. In addition, National Fuel states that it would be helpful if the Commission included a mapping summary table or checklist in § 380.12, since the mapping requirements are spread throughout the section.

Commission Response: The intent of all the ''mileposting'' requirements is to have a unique and uniform method of identifying the position of resources on the route of the proposed pipeline. We will accept any method that accomplishes this goal; therefore we add a new § 380.12(b)(6) to read:

Whenever this section refers to ''mileposts'' the applicant may substitute ''survey centerline stationing'' if so desired. However, whatever method is chosen should be used consistently throughout the resource reports.

Rather than cluttering the regulation with a listing of where things can be found, we will provide a guidance list of the Commission regulations that require maps and post it on our INTERNET website. The following sections include references to maps or plat plans in the regulations: 380.12(c)(1); 380.12(c)(2)(i)(C); 380.12(c)(3)(i); 380.12(c)(3)(iii); 380.12(c)(4); 380.12(d)(4); 380.12(k)(2)(iv); 380.12(l)(2); 380.12(l)(3); and 380.12(o)(1, 2–4, & 6).

Minimum Checklist Requirement

The NOPR proposed to add a checklist of minimum filing requirements for environmental reports (§ 380.12) as appendix A to part 380; missing items will result in an application being subject to rejection under § 157.8.

Comments: Great Lakes and INGAA state that some of the information required in the checklist is not available at the time of filing. For example, information on all access roads and contractor staging yards by milepost can not be finalized until after a project is bid out and the contractor is able to assess the project. Some information, such as description of proposed compressors, including manufacturer name, model number and horsepower rating will harm the bidding processes to the detriment of ratepayers. Other information such as wildlife resource surveys is seasonally dependent. INGAA asks the Commission to consider these realities when deciding whether to reject an application. INGAA recommends that the Commission modify the checklist to allow more general information to be provided at the time of filing, along with a schedule of when more detailed info will be provided.

Great Lakes requests that the Commission modify the checklist to designate certain data (including data regarding wetlands, T&E surveys, and cultural resource surveys) which, although preferred at the time of filing, may be omitted without the filing being rejected provided that the pipeline includes an acceptable schedule for filing any omitted material. The new regulations should recognize both failure to obtain landowner consent to

entry and seasonal considerations such as weather as excusing a pipeline from supplying environmental information at the time of filing.

Enron agrees with INGAA that some information is not available at the time of filing. Enron suggests that the following items be removed from the checklist: Wetland maps and delineation, § 380.12(d)(4); contractor and pipe storage yards, § 380.12(j)(1)(iv), hydrostatic test data, § 380.12(d)(6); planned residential and commercial business development, § 380.12(j)(3); and manufacturer's name and model numbers for compressor units, § 380.12(k)(4). Enron contends that a filing should not be rejected based on environmental information that is not available at time of filing.

INGAA recommends that the following be added to the end of § 380.12(a)(2):

Each topic of the checklist should be addressed or its omission justified. Any information missing at the time of filing shall be identified as to why it is missing and when the applicant anticipates it will be filed. The Director shall consider the proposed timing of the filing of missing information in concert with that of other competing applications, if any. If this missing information is needed to complete a NEPA analysis of a competing application within a reasonable time frame, the Director will notify the applicant of a revised time schedule for the needed information. Failure to provide the data within the time schedule may result in the delay of processing or rejection of the application.

Process Gas Consumers opposes the proposal to reject outright filings that fail to provide the items in the checklist. Pipelines may only be able to file interim or conditional approvals from relevant environmental agencies at time of filing. Commission should remain flexible in accepting applications for which the pipeline demonstrates that it is actively pursuing all required environmental permits and data.

Commission Response: As stated in § 380.12(a)(2), the applicant should explain the absence of any material specified in the resource report description in the regulation and provide a schedule for filing the missing information. If the missing material is part of the minimum filing requirements, then the filing may be rejected if the material is missing because of inadequate planning. It is up to the applicant to prepare for the filing for its project far enough in advance to maximize the level of detail in the reports. While it may not be possible to initially determine all the access roads or staging yards required by a project, companies with the expertise to build pipeline projects are certainly capable of outlining a reasonable set of roads and staging areas that will cover most of the needs of the project. In fact, most current applications include this information when they are filed. As for wildlife surveys, there are widely available lists of the sensitive species for which surveys may be needed in a project area, and every effort should be made to plan for these surveys in time to meet project needs. In many cases, it will still be possible to survey for habitat even if the species will not be there. The wetlands list can be provided based on NWI maps or similar sources if delineations have not been done by the time of filing of the application. Nevertheless, the staff will review the reasons given for the absence of required material when determining whether an application should be rejected.

As to INGAA's suggestion, the presence or absence of a competing application is irrelevant to whether an incomplete application should be accepted. However, to make it clear that there is room for discretion in the event a good reason is provided by the applicant, we will add the following wording to § 380.12(a)(3): ''* * * will result in rejection of the application unless the Director of OPR determines that the applicant has provided an acceptable reason for the item's absence and an acceptable schedule for filing it. Failure to file within the acceptable schedule will result in rejection of the application.''

Finally, contrary to Process Gas Consumers' comment, permits are not required by the checklist.

Cumulative Effects

New § 380.12(b)(3) requires the pipeline to identify the effects of construction, operation and termination of a project, including the cumulative effects resulting from existing or reasonably foreseeable projects.

Comments: INGAA is concerned that a new, more detailed level of analysis is proposed by requiring identification of ''cumulative effects'' resulting from existing or reasonably foreseeable projects. INGAA contends that this is more appropriate on the Environmental Impact Statement (EIS) level and is excessive for environmental report analysis. It argues that the provision should be clarified or deleted.

Commission Response: The CEQ regulations include ''cumulative'' effects in the definition of ''effects'' or impacts. Cumulative effects are, in fact, part of the current specification in appendix G.[29]

[29] See the introductory paragraph (c) in the appendix.

Location Maps

New § 380.12(c)(1) is part of Resource Report 1 and requires pipelines to describe and provide location maps of all facilities.

Comments: INGAA's comments here mirror its comments to § 380.12(a)(2). It states that certain of the specific requirements in paragraph (c)(1) will be difficult to provide at the beginning of a project.

Response: Our response is the same as stated for § 380.12(a)(2). If the material is part of the minimum filing requirements, then the filing may be rejected if the material is missing because of inadequate planning.

Nonjurisdictional Facilities

Proposed § 380.12(c)(2) lists the information the Commission needs to consider the environmental impact of related nonjurisdictional facilities that would be constructed upstream or downstream of the jurisdictional facilities for the purpose of delivering, receiving, or using the proposed gas volumes.

Comments: Enron, INGAA, Koch Gateway, and Williams state that requiring information relative to the four-factor test creates conflict between the pipeline and the nonjurisdictional customer building related facilities. They argue that nonjurisdictional companies may be unable or unwilling for competitive reasons to provide such information to the pipeline. The environmental review and permitting process for these nonjurisdictional facilities does not encompass the same filing requirements as the Commission's process. Thus, they contend, information required by this proposed regulation may have to be created specifically for the Commission before the status of the facilities is reviewed under the four-factor test.

Duke Energy shares the same basic concern. It requests that pipelines not be placed in peril of rejection with respect to this requirement. Duke Energy proposes that the requirement be deleted from the minimum requirements list, or alternatively, the Commission clarify that: (1) A good faith statement that the information being provided is all that is available to the applicant at the time of filing; or (2) a statement that the pipeline has reached the conclusion that the nonjurisdictional facilities are not subject to Commission environmental review, will suffice to avoid rejection.

AGA is concerned that the Commission intends to impose conditions upon facilities that are not within its jurisdiction. AGA does not

want to subject nonjurisdictional facilities to duplicative environmental reviews by both the Commission and state agencies. It requests that the Commission clarify that it will not impose conditions on nonjurisdictional facilities or duplicate existing state environmental requirements.

Commission Response: The information requested for nonjurisdictional facilities is almost exclusively descriptive and deals with the type of facility and its location. This is not information that the applicant should have any trouble obtaining from the customer. The only detailed environmental material relates to cultural resources and endangered species. Once the applicant knows what nonjurisdictional facilities are intended and their location, it will not be difficult to get determinations from the appropriate agencies on whether additional information is needed. At the point the nonjurisdictional company indicates it is, or is not, going to do surveys the applicant will be able to so inform the Commission. Sections 380.12(a)(2) and (a)(3) will allow the applicant to show why the information could not be provided.

The Commission is not expanding its jurisdiction beyond its current boundaries. The wording says ''the extent to which the project is under Commission jurisdiction.'' For the purposes of the four factor test, ''project'' means all the facilities that are associated with the jurisdictional proposal and that which as a whole define the reason for the application.

Electronically Generated Maps

New § 380.12(c)(3)(i) requires the pipeline to file current, original United States Geological Survey (USGS) topographical maps or equivalent maps covering the route of the proposed project.

Comments: Enron and INGAA state that electronically generated USGS maps are currently accepted by the Commission. They request that the Commission clarify that electronically generated equivalent maps will continue to comply with this requirement.

Commission Response: The requirement is for ''original'' USGS maps or ''maps of equivalent detail.'' If the electronically generated maps can provide the ''equivalent'' level of detail, then they are acceptable.[30]

[30] See the discussion of § 380.12(c)(3)(ii) concerning up-to-date material.

Aerial Photographs

New § 380.12(c)(3)(ii) requires the pipeline to file original aerial photographs or photo-based alignment sheets not more than one year old showing the route of the proposed project and the location of major aboveground facilities.

Comments: Duke Energy, El Paso, Enron, INGAA, and National Fuel argue that when there has not been a change in land use, aerial photographs a few years old still accurately depict current conditions. They contend that to require new photographs could cause significant delays since they can only be taken when weather and foliage do not inhibit clear shots. These parties suggest that the regulation not prescribe a set time frame for when the photograph must have been taken, but require that the photograph, regardless of age, reasonably depict the current land usage. El Paso suggests allowing photographs not more than three years old.

Enron states that the requirement to provide a 0.5 mile-wide corridor is burdensome. It suggests no set distance be required, in order to allow enough flexibility that the width and scale depicted on aerial photographs can be based on the land use the proposed facilities will impact.

Williston Basin wants the Commission to clarify that digital photographs are acceptable as a more economical and efficient alternative to aerial photographs.

Commission Response: Upon reconsideration, we believe it is appropriate to allow older aerial photos as long as the pipeline certifies that the aerial photographs accurately depict current land use and development in the project area. Further, the applicant should draft locations of any new houses on the photographs.

At the requested scale a one-half mile wide corridor is about 5 inches wide. The aerial photographs that are currently filed are commonly 24 inches square. USGS topographic maps are substantially more than 1 foot wide in each dimension with each inch of map covering 2,000 feet or almost 0.5 mile. This requirement will only require obtaining adjacent maps where the proposed facilities are parallel and adjacent to the border or cross a corner of the map or photograph.

We will change the wording of § 380.12(c)(3)(ii) and appendix A to clarify that the Commission requires aerial images, not necessarily emulsion based photographs. We will allow older images as long as they are still an accurate representation of the current conditions. Older images should be modified to show any residences constructed since the image/photograph was made. The new wording is: ''Original aerial images or photographs or photo-based alignment sheets based on these sources, not more than one year old (unless older ones accurately depict current land use and development) * * * and including mileposts. Older images/photographs/alignment sheets should be modified to show any residences not depicted on the originals.'' In Resource Report 1 in appendix A, the text of the fourth requirement should read: ''Provide aerial images or photographs or alignment sheets based on these sources with mileposts showing the project facilities; (§ 380.12(c)(3)).''

Construction and Restoration Methods

New § 380.12(c)(6) requires that the proposed construction and restoration methods be described and identified by milepost.

Comments: Enron and INGAA state that construction and restoration methods can be categorized based on the existing land use, which is required, and by milepost in Resource Report 8 and § 380.12(j)(2). Therefore, it is not necessary to provide the information in § 380.12(c)(6). INGAA proposes to remove the phrase ''and identify by milepost.'' Further, Enron requests an explanation of the phrase ''longitudinally under roads.''

Commission Response: We disagree with INGAA's comment. The discussion in § 380.12(c)(6) deals with special construction techniques that would be used in certain areas. These areas may or may not correspond to the land use areas described in § 380.12(j)(2). For instance, ''rugged topography'' does not correspond to any particular land use category.

As to Enron's request, ''longitudinally under roads'' means under the road and parallel to its length. This is in contrast to crossing the road. We will replace the above words in § 380.12(c)(6) with: ''parallel to and under roads.''

Estimated Workforce Requirements

New §§ 380.12(c)(7) and (g)(3) require the pipeline to provide the estimated workforce requirements for each project.

Comments: Enron and INGAA are concerned with having to describe workforce requirements at the time of filing. They contend that this is not currently required by appendix G. At time of filing, pipelines have not bid out the project and any estimate could impact the labor component of bid responses. They argue that the Commission should allow applicants to

submit such data after a contractor has been selected.

Commission Response: Contrary to INGAA's belief, Resource Report 5 in the current requirements in appendix G does, in fact, ask for workforce requirements. The Commission believes that the pipelines are familiar enough with the requirements for building pipelines that they can adequately estimate the workforce requirements needed to comply with this requirement without having chosen a contractor.

Names and Addresses of Landowners

New § 380.12(c)(10) requires the pipeline to provide the names and addresses of all landowners whose land would be crossed by the project facilities.

Comments: INGAA contends that this requirement involves the landowner notification issue in the proceeding in Docket No. RM98–17–000. INGAA proposes to notify landowners the following business day after FERC assigns a docket number and notices the application. When the Commission notifies the pipeline of its intent to prepare an EA or EIS, the pipeline would then provide the Commission with a list of landowners of record (landowners receiving most recent tax notice) that may be subject to eminent domain within 10 days of the Commission's request. INGAA requests that the Commission adopt this proposal.

Commission Response: While it is true that the landowner notification issue is being considered under Docket No. RM98–17–000, that docket concerns whether, when, and how, the pipelines should notify landowners of a project (including which landowners should be notified) separate from the Commission's notification of scoping under the NEPA process. The Commission will still need to be able to notify certain landowners as part of the NEPA notification process and that is the purpose behind this requirement. Since INGAA has proposed and most of the pipelines which commented on the notice in the Docket No. RM98–17–000 agreed to notify landowners very shortly after filing, there should be no difficulty in providing these names and addresses to the Commission at the time of filing. Any other method can only slow up the processing of applications by delaying the issuance of the scoping notice.

Resource Report 2—Water Use and Quality

Comments: The Department of Interior (Interior) contends that the first sentence of § 380.12(d)(1) should be modified to read:

Identify and describe by milepost, perennial waterbodies and municipal water supply or watershed areas, especially designated surface water protection areas and sensitive water bodies, and both seasonal and permanent wetlands that would be crossed.

Commission Response: The change to § 380.12(d)(1) is unnecessary. U.S. Army Corp of Engineers (COE) jurisdictional wetlands encompass both types of wetland. Section 380.12(d)(4) makes it clear that delineations using the current Federal methodology are required and these delineations will identify all COE-jurisdictional wetlands.

Wetland and Waterbody Mitigation Measures

New § 380.12(d)(2), in Resource Report 2, Water use and quality, requires pipelines to compare proposed mitigation measures with the staff's current ''*Wetland and Waterbody Construction and Mitigation Procedures*'' (WWCMP or Procedures).

Comments: Enron and INGAA argue that there may be methods approved by state and local agencies that accomplish the same goal as the WWCMP, but that are not the same as the Procedures. They ask the Commission to clarify that pipelines can show that certain procedures are not necessary for a particular project and thus not required. Enron wants the Commission to clarify that reference to the Procedures is not intended to change the status of this document as a guideline. It does not believe these Procedures should be cited in regulations and proposes that they be removed from § 380.12(d)(2).

National Fuel seeks extensive revision to the Procedure's manual, particularly sections V.B.2.c, V.B.6.b & c, V.B.7.c, VI.B.3.

Williams states that the requirement in paragraph (d)(1) to identify waterbodies is the same requirement as in (e)(2). Williams states that the requirements should only be included in one resource report.

Interior states that placing barriers in pipeline trenches to ensure that surface or ground water is not diverted or drained from wetlands should be a required mitigation measure.

Commission Response: The reference to the WWCMP does not create a requirement that these procedures be used. They are simply a set of procedures that the Commission believes will adequately protect these resources during construction. Therefore, if the applicant indicates that they will be used for its project the staff's review time will be minimized for these resources. There will certainly be situations where portions of the procedures are not applicable. The applicant is required to inform the Commission of those project-specific situations in order for the Commission to better understand the project's potential for environmental impact.

Since the Procedures are not being codified by this rulemaking we will not modify or update them here. The staff of the Office of Pipeline Regulation is continually looking at the Procedures to see if modification is in order. As changes are made to the current guidelines, they will be noticed and the revised version will be made available.[31]

The references to wetlands in §§ 380.12(d)(1) and 380.12(e)(2) are not the same. Section 380.12(d)(1) requires a listing of the wetlands that are identified on the maps discussed in § 380.12(d)(4). Section 380.12(e)(2) requires a discussion of the fish, wildlife or vegetation of significance in the wetlands. The difference is in classification of wetlands versus their habitat use. Nevertheless, the applicant can always indicate that the material required in one resource report can be found in another by cross-referencing it, if it is, in fact, duplicative.[32]

As to Interior's comments, there are a number of mitigation measures that are identified in the Procedures, among them a requirement to maintain the hydrology of wetlands. Applicants are required to compare their proposals to these procedures. Our staff will review the proposals to make sure wetlands are properly protected.

Staging Areas

New § 380.12(d)(3) requires applicants to describe typical staging areas need at waterbody and wetland crossings.

Comments: Interior states that § 380.12(d)(3) should be worded to ensure that staging areas are not placed in wetlands.

Commission Response: There are a number of mitigation measures that are identified in the Wetland and Waterbody Construction and Mitigation Procedures, among them a requirement to keep extra work space away from wetlands. Applicants are required to compare their proposals to these procedures. It is important to note that it may not always be possible to keep staging or other work areas entirely out of wetlands.

Wetlands Maps

New § 380.12(d)(4) requires identifying wetlands by either using

[31] The WWCMP are currently available on our Internet website at http://www.ferc.fed.us/gas/environment/gidlines.htm.

[32] See section 380.12(a)(2).

National Wetlands Inventory (NWI) maps or the alternative USGS maps.

Comments: INGAA states that the minimum checklist only allows filing of NWI maps and should accommodate the use of both types of maps.Enron states that wetland maps should not be a minimum checklist item, or the checklist should be revised to allow the alternative of initially filing the best available information, supplemented at a later date when delineation is completed.

Interior states that § 380.12(d)(4) allows filing of NWI maps to show wetland crossings. Because these maps may not show all jurisdictional wetlands, Interior argues that the applicant should be required to verify wetland locations by conducting field delineations verified by the COE.

Commission Response: We intended § 380.12(d)(4) to require applicants to obtain NWI maps in all cases where they are available. State wetland maps, not USGS maps, should be provided if NWI maps are not available. As the checklist states, these maps are needed at the time of filing for general routing and alternative routing considerations. This section has been modified to make it clear that the Commission wants a field delineation of wetlands. Although actual wetland delineations are required, they can be filed later if necessary. In any event, they must be filed before the staff's EA or EIS can be completed. Section 380.12(d)(4) and the checklist will be reworded as follows:

Include National Wetland Inventory (NWI) maps. If NWI maps are not available, provide the appropriate state wetland maps. Identify for each crossing, the milepost, the wetland classification specified by the U.S. Fish and Wildlife Service and the length of the crossing. Include two copies of the NWI maps (or the substitutes, if NWI maps are not available), directed to the environmental staff, clearly showing the proposed route and mileposts. Describe by milepost, wetland crossings as determined by field investigations using the current Federal methodology.

The seventh requirement in the checklist (appendix A) for Resource Report 2 will have the following parenthetical added after the word ''maps'':

(or the appropriate state wetland maps, if NWI maps are not available).

Hydrostatic Test Water

New § 380.12(d)(6) relates the information required when pipelines discharge hydrostatic test water.

Comments: Enron and INGAA contend that a permit is required from state and federal agencies other than the Commission and that such testing is not done until a pipeline is installed. They argue that such information is not necessary, is not the Commission's responsibility and that the requirement should be deleted from Resource Report 2. Alternatively, Enron requests that such information not be included in the minimum checklist, since such testing does not generally occur until just prior to placing facilities in-service.

Commission Response: While it is true that there are other agencies which have responsibilities with respect to hydrostatic test water, that does not alleviate the Commission's responsibility under NEPA to know the effects of projects under its jurisdiction. Further, the Commission can not simply defer to what another agency will do in a particular case unless it has some independent knowledge of the potential impact. Further, we note that the minimum filing requirements do not include any information related to hydrostatic test water, although such information is needed to complete the EA or EIS.

Terrestrial Habitats

New § 380.12(e)(2), part of Resource Report 3, Fish, wildlife, and vegetation, requires a description of terrestrial habitats, including wetlands, that might be affected by a proposed project.

Comments: Interior states that the first sentence of § 380.12(e)(2) should be modified to read: ''Describe terrestrial habitats, including wetlands, typical wildlife habitats, and rare or unique habitats, that might be affected by the proposed action.''

Commission Response: We agree and will modify section 380.12(e)(2) to read: ''* * * typical wildlife habitats, and rare, unique or otherwise significant habitats, that might * * *''.

Aquatic and Terrestrial Species

New § 380.12(e)(4), part of Resource Report 3, Fish, wildlife, and vegetation, requires a description of the impact of construction and operation on aquatic and terrestrial species and their habitats.

Comments: INGAA states that while general information can be provided at the time of filing, detailed information cannot be furnished until all state and federal agency work is done and field survey work is completed. It contends that requiring detailed information at the time of filing could delay a project by more than one year. INGAA recommends that the checklist require general information at the time of filing and the submission of more detailed information at a later date.

Response: The only site-specific information required by § 380.12(e)(4) deals with significant habitats and communities. These areas will normally be known to state and local agencies which must be consulted by the applicant. In most cases, surveys are not needed to satisfy the requirements of this paragraph, general information will suffice. However, surveys should be done where the state or local agencies identify species with which they are concerned. While, the checklist does not require these surveys to be complete at the time of filing, the Commission sees no reason why the pipeline should not have that information available at the time of filing. We will modify the last sentence of this paragraph by replacing the comma after ''vegetation'' with a period and the remainder of the sentence will read:

Surveys may be required to determine specific areas of significant habitats or communities of species of special concern to state or local agencies.

Endangered or Threatened Species

New § 380.12(e)(5) requires an applicant to identify all federally listed or proposed endangered or threatened species that potentially occur in the vicinity of a proposed project.

Comments: Interior states that the first sentence of § 380.12(e)(5) should be modified to read:

Identify all federally-listed or proposed endangered or threatened species and critical habitat that * * *

Commission Response: We agree and will also remove the reference to state species in this section, since it duplicates the reference in § 380.12(e)(4). We will modify § 380.12(e)(5) to read:

* * * or threatened species and critical habitat that potentially occur in the vicinity of the project.

Cultural Resources:

New § 380.12(f), Resource Report 4, sets forth guidelines for pipelines relating to filing cultural resource information.

Comments: Enron wants the Commission to remove reference to ''*OPR's Guidelines for Reporting on Cultural Resources Investigations*,'' stating that the guidelines should not cited in the regulations.

INGAA contends that the report should not be required for projects within previously disturbed areas, such as an existing yard, consistent with current appendix G. Williams agrees and states that segmented projects should allow phased completion of reports.

Williams states that § 380.12(f)(2)(ii) discusses procedures if landowners deny access to private property and

certain areas are not surveyed. In that event, the unsurveyed area must be identified and supplemental surveys or evaluations conducted after access is granted. INGAA believes that § 157.8 provides the same procedures for all Resource Reports, i.e., if a landowner denies access, there is no requirement to supply the info at the time of filing and the applicant may supplement reports when access is granted. INGAA seeks clarification on this point.

Section 380.12(f)(2) states that SHPO and land management agency comments must be filed with the initial application. Subsection(f)(2)(i) states that any SHPO and land management agency comments not available at the time of filing may be filed separately. Enron suggests adding the phrase ''if available'' at the end of that section.

National Fuel asks that Section IX.A of OPR's Guidelines for Reporting on Cultural Resources Investigations be modified to eliminate the need for at least 25 feet separation between a bore or directional drill and the resource to qualify as avoiding the resource.

Williston Basin believes that the unanticipated discovery plan required in § 380.12(f)(1)(i) should only be provided if consultation with the local SHPO indicates likelihood of a discovery. Williston Basin states that this is consistent with the Historic Preservation requirements of § 800.11(a) of Title 36 of the Code of Federal Regulations.

The Council states that § 380.12(f)(2)(ii) indicates that a certificate can be issued even though access has been denied to certain project lands. It argues that the rule need to make an unequivocal statement that issuance of the certificate will not preclude consideration of a range of alternatives where access has been denied to certain lands.

The Council also contends that there is no mechanism to carry the initial consultations mentioned in § 380.12(f)(3) through to consideration of avoidance or mitigation.

Commission Response: The reference to the Guidelines for Reporting on Cultural Resources Investigations does not create a requirement that these procedures be used. They are simply a set of guidelines to assist the applicant in preparing material for the Commission, the SHPO, and others. The Commission believes that if the applicant follows these guidelines the entities being consulted will likely have all they need to complete their statutory obligations in a timely fashion. There will certainly be situations where portions of the guidelines are not applicable. However, what is ultimately required will be decided by the Commission and the consulted entities.

INGAA's comment concerning previously disturbed areas is consistent with the change to § 157.206, which indicates that the standard environmental conditions for blanket filings are not required if there is no ground disturbance, among other things. If there is no ground disturbance, the report might consist simply of the applicant's statement that there will be no ground disturbance.

If the disturbance is similar to the previous ground disturbance, the report might consist of photographs of the area and SHPO agreement that the ground disturbance does not constitute a concern. However, since it is difficult to encompass the many situations that could arise dealing with prior disturbance and the many exceptions possible, the Commission will still require that the applicant obtain the appropriate SHPO's agreement in order to avoid the requirement for a more detailed report. Of course, as with all the resource reports, the pipeline has the option to explain the absence of material based on the nature of the project. It will then be up to the staff to determine if the reason is adequate.

Generally, segmented projects are not allowed under NEPA or the National Historic Preservation Act (NHPA). There is either one project or a group of independent, largely unrelated projects. The reason in the case of NEPA is to keep other agencies from splitting a project into several isolated parts so that the individual impacts will be minimal for each part of a project but the aggregate impact of all the parts might be significant. If the applicant can show that the filing is for a group of individual projects, then it might be possible to accept filings in stages. However, even in this case, it will generally depend on the requested timing of the approval. It is the Commission's experience that this is rarely acceptable. Of course, reports for the areas for which access is denied will come in later.

Requiring survey reports to be filed with the application is intended to ensure the speediest review possible.

Section 157.8 provides that a filing will not be rejected if surveys or other information can not be obtained because access was denied to the property. This applies to all of the information, not just cultural resources. Section 380.12(f)(2) should read: ''* * * written comments from SHPOs, THPOs, and land-management agencies, if available, must be filed with the initial application.''

We will not change the requirement that a bore be at least 25 feet from all portions of a site in order to qualify as an ''avoidance.'' There have been enough instances of directional drills or bores failing to miss or otherwise adversely affecting cultural resources that this distance represents the minimum we are willing to accept. This does not mean a directional drill that is closer cannot be done, it simply means that we want to retain the option of providing the Advisory Council on Historic Preservation an opportunity to comment on the effects that might result from a failed drill.

We agree with Williston Basin and will remove § 380.12(f)(1)(i). Section 380.12(f)(2) should begin: ''The Documentation of initial cultural resource consultation, * * *''. In appendix A, the box for Resource Report 4 should be modified by deleting the checklist item for ''Unanticipated Historic Properties and Remains.''

As to the Council's comment regarding issuing certificates even though access has been denied to certain lands, we will change the end of the first sentence in § 380.12(f)(2)(ii) to read: ''* * * supplemental surveys or evaluations shall be conducted after access is granted.''

The Council also comments that there is no mechanism to carry the initial consultations mentioned in § 380.12(f)(3) through to consideration of avoidance or mitigation. It misunderstands the intent of the rule. The Commission wants an applicant to obtain a certain level of information regarding cultural resources prior to filing the application. Once the filing is made, we will direct the further analysis and consultations as required on a case-by-case basis, including consideration of avoidance and mitigation.

Geological Resources

New § 380.12(h)(6), part of Resource Report 6, geological resources, requires various information with respect to underground storage facilities.

Comments: NGAA contends that this section requires certain information which expands what is currently required to be filed. For example, it refers to § 380.12(h)(6)(i), which requires information on how the applicant would control and monitor drilling activity of others within the storage field and buffer zone, and § 380.12(h)(6)(ii), which requires information on how the applicant would monitor potential effects of the operation of adjacent storage or production facilities on the proposed facilities. INGAA states that applicants have little control over information on the drilling activities of other operators within a storage field, since adjacent

facilities information would generally be highly confidential. Similarly, Enron states that the information required in these sections is beyond the control of the storage operator. INGAA recommends that this information be provided to the extent it is within the control of the applicant.

Commission Response: We note that the requirement is to provide a discussion of what steps the applicant would take to determine or ensure the security of its facility from the actions of others. It does not require any information about other producers or operators. We believe this is necessary to ensure that safe operation of the applicant's own facility.

Mitigation Measures

New § 380.12(i)(5), which is part of Resource Report 7, Soils, requires pipelines to describe proposed mitigation measures and compare them with staff's Upland Erosion Control, Revegetation and Maintenance Plan (Plan).

Comments: Enron and INGAA raise the same comments here as previously discussed in Resource Report 2, § 380.12(d)(2). They state that the Commission should accept a general description of the mitigation measures that will be employed and a schedule for providing more site-specific mitigation measures.

National Fuel proposes that Section VII.3(g) of the Plan be revised.[31]

Commission Response: The comments by INGAA and Enron track their comments with respect to the WWCMP in § 380.12(d)(2). Our response is the same.

Land Use

New § 380.12(j), Resource Report 8, sets out the requirements for Land use, recreation and aesthetics.

Comments: Enron and INGAA are concerned with the requirement to describe land use beyond the immediate adjacent property up to 0.25 mile from the project. They argue that the requirement should be revised to describe lands beyond the immediately adjacent lands only when they involve environmentally sensitive areas.

INGAA states that § 380.12(j)(3) requires an applicant to identify all planned development by milepost and the time frame for construction. It states that current appendix G only requires listing planned development, if known. INGAA and National Fuel request that the regulation be clarified to require information only on planned development on file with local planning boards or recorded county records. They argue that it can be misleading to interview each affected landowner about possible development plans that have not progressed to the point of filing.

Enron requests that information on contract and pipe storage yards in § 380.12(j)(1) and planned residential and commercial business development in § 380.12(j)(3) be removed from the minimum checklist as not generally available at the time an application is filed.

Enron and INGAA object to the requirement in § 380.12(j)(10) to describe ROW compensation. They argue that this requirement is not currently required, and will have harmful effects. INGAA contends that most ROW issues are resolved on a mutually agreeable basis between the pipeline and landowner. Where agreement cannot be reached, compensation is set in state or federal court based on local valuation. INGAA contends that it is highly prejudicial for a pipeline to speculate on property compensation values at the time an application is filed. Such statements could make it more difficult to resolve ROW matters by settlement. This requirement could jeopardize negotiations with other landowners. INGAA recommends that this requirement be eliminated or clarified to discuss the general process to acquire easements by purchase or the exercise of eminent domain.

Duke Energy shares the same concern. It contends that compensation plans could be stated in general terms since actual compensation is site-specific. Duke Energy argues that the regulation should not require a company to select a forum (state or federal court) for the eminent domain process at such an early stage, nor should a detailed description of the process be required. This is because it may be unclear at time of filing if exercise of eminent domain will be required.

The Council states that § 380.12(j)(4) should specifically reference and include ''traditional cultural properties.''

Commission Response: The intent of the land use Resource Report is to describe land use adjacent to the ROW and to make sure the applicant and the Commission are aware of important areas which, although not crossed, might nonetheless be affected by the project. To clarify this intent, we will make several changes to the proposed language. We will change the second sentence in the introduction to § 380.12(j) as follows: ''* * * describe the existing uses of land on, and (where specified) within 0.25 mile of, the proposed project * * *''. We will add the specifications to paragraphs (3), (4), (6), and (8) as follows: In (3): ''Describe planned development on land crossed or within 0.25 mile of proposed facilities, the time frame * * *;'' in (4): At the end: ''* * * agencies or private preservation groups. Also identify if any of these areas are located within 0.25 mile of any proposed facility;'' in (6): ''Describe any areas crossed by or within 0.25 mile of the proposed pipeline or plant and operational sites which are included in, or are designated * * *;'' in (8): ''Describe the impact the project will have on present uses of the affected area as identified above, including * * *''

We accept INGAA's comment regarding planned development. The intent was to obtain the same material currently included in Appendix G. We will add a new sentence to the end of § 380.12(j)(3) that will read: ''Planned development means development which is on file with the local planning board or the county.'' The following words should be added after the words ''time frame'' in the first sentence so it will read: ''* * * time frame (if available) for such development * * *''.

The applicant should provide its best estimate of what pipeyards and other areas would be required with the application and bring it up to date as better data becomes available. Since we are clarifying the requirement for development information to make it clear that the applicant need only check local and county records to determine whether such development is planned, we will not remove this requirement from the minimum filing requirements. The Commission needs this information to make a responsible decision on the proposed facility location.

Duke Energy and INGAA believe that § 380.12(j)(10) requires information on the specific dollar amounts of landowner compensation and that the requirement to provide this information is not currently in appendix G. The last sentence of § 380.12(j)(10) comes verbatim from appendix G. However, it does not ask for and there is no intent to have specific amounts of compensation provided. The applicant should provide a discussion of what would normally be compensated, and the process for determining the amount of compensation on a state-by-state-basis.

The Council states that § 380.12(j)(4) should specifically reference and include ''traditional cultural properties.'' To the extent this information is readily available to the public we will make this addition.

[33] See National Fuel's comments, at 7.

However, since it is very likely that the information will not be available because of tribal concerns, we prefer to address this in Resource Report 4, where we have specified we expect privacy to be maintained for resources that are sensitive. We will modify § 380.12(j)(4) to read: ''* * * or registered natural landmarks, Native American religious sites and traditional cultural properties to the extent they are known to the public at large, and reservations, * * *.''

Air and Noise Quality

New §§ 380.12(k)(2), (3) and (4), part of Resource Report 9, Air and noise quality, require information regarding the noise impact of compression and LNG facilities.

Comments: INGAA states that § 380.12(k)(2)(ii) requires a noise survey at the property line of the compressor, which is unnecessary and not required in current appendix G. It contends that the noise level restriction is only applicable to the nearest noise-sensitive area, which is the area of concern. Thus, no noise survey at the property line should be required. Enron agrees that this requirement should be eliminated.

Section 380.12(k)(3) requires detailed calculations for emission rates and the impact on air quality. INGAA is concerned that this requirement is duplicative of work done in obtaining air permits from the state and/or federal permitting agency. Such permits are not finalized until specific compressor models are selected. In many cases, all of the factors needed to obtain the necessary air permits are not known until after a certificate is issued by the Commission. Enron and INGAA requests that the Commission's current practice continue, which allows pipelines, at the time of filing, to provide estimates for a compressor unit's potential emissions of pollutants that may effect ambient air quality.

Williams states that providing full load noise data may not always be operationally feasible, and that the Commission should allow flexibility to accommodate limitations.

Enron and INGAA are concerned that § 380.12(k)(4)(i) does not appear to accommodate noise calculations generated by a computer model, such as AGA Sound. Compliance with this section would require pipelines to duplicate a computer-generated process with a redundant set of manual calculations. INGAA requests that the step-by-step supporting calculations be eliminated and instead allow for the generation of noise calculations using the latest available technologies.

Enron and INGAA both contend that § 380.12(k)(4)(ii) requests certain information, such as the manufacturers name and model number of new compressor units, that should be removed from the minimum checklist, since this information is not generally available at the time the application is filed. They suggest that the minimum checklist only require identification of a range of feasible units, since pipelines generally do not request bids for units so far in advance of construction. This section also requires pipelines to provide noise data with and without noise attenuators. Since some manufacturers provide this data and some do not, INGAA requests that the Commission clarify that the applicant is only obligated to provide the information available at the time of filing.

Enron raises the same concern about the 55dB(A) noise limit in § 380.12(k)(4)(v)(A) that it raised in § 157.206(b)(5). It requests that the Commission continue to apply the limit only to new or modified units.

Commission Response: INGAA's comment claims incorrectly that the requirement for a property line noise survey in § 380.12(k)(2)(ii) is unnecessary and not required in current appendix G. In fact this requirement is a direct quote from the third sentence in section (9)(b) of appendix G. The survey is needed to help in determining the directionality of the noise emitted by the station as well as its attenuation in the direction of the noise sensitive areas.

INGAA requests that § 380.12(k)(3) be modified to allow estimates of air pollutant emissions. This is, in fact, exactly what the paragraph does. The first word of paragraph 3 is ''estimate.'' However, even if the data are estimates the calculations involved in those estimates must be provided in detail so that the Commission can follow how the estimates were derived.

The estimates are required for both existing (where appropriate) and proposed units. The information for existing units is in the existing permits for those units. With respect to the comment pertaining to duplication of effort, as with many of the environmental issues addressed by NEPA there are agencies which have specific responsibilities under other statutes, but that does not reduce the Commission's responsibility to know what the environmental impact of a project will be. This need to know does not in any way usurp another agency's jurisdiction. To the extent that the applicant has already initiated whatever review process may be required at other agencies, the Commission attempts to dovetail its analysis as a ''lead Federal agency'' with the review of the cooperating agencies.

Williams is concerned that it may not be operationally feasible to obtain full load data. If this is the case the applicant should provide data taken as close to full load as possible and extrapolate to full load. As with any material specified in the resource reports the applicant should provide the best information available and indicate the constraints it faced in attempting to provide what was required. If that is not acceptable the staff will so inform the applicant.

INGAA is concerned that § 380.12(k)(4)(i) may not allow computer modeling and may require manual computations. This is not the case. However, if a computer model is used the filing must specify the program used and include the input data and all assumptions made in the model. We will modify § 380.12(k)(4)(i) to read: ''Include step-by-step supporting calculations or identify the computer program used to model the noise levels, the input and raw output data and all assumptions made when running the model, far-field sound level data for maximum facility operation, and the source of the data.''

INGAA claims that the applicant frequently does not have specific information on the compressor units to be used for the project. We have found that more and more applications do in fact have this information. In fact, the generally long lead time required to order compressors means that an applicant who is interested in obtaining quick approval so its project can be placed in service quickly will have to have ordered compressors, or at least decided on what it intends to order prior to filing. Consequently, we will not change the requirement. However, as with all of the resource report material the applicant may give reasons why certain information is missing and provide a schedule for its submittal and the staff will determine if the filing is still acceptable.

As to the 55dB(A) noise level, the intent is to have the noise limit apply to the new or modified compressor units. In order to clarify this, we will modify § 380.12(k)(4)(v)(A) to read: ''The noise attributable to any new compressor station, compression added to an existing station, or any modification, upgrade, or update of an existing station must not exceed a day-night sound level (L_{dn}) of 55dBA at any pre-existing noise-sensitive area (such as schools, hospitals, or residences).

Alternatives

New § 380.12(l), Resource Report 10, requires pipelines to describe alternatives to projects and compare the environmental impacts of such alternatives to those of the proposal.

Comments: INGAA and Williams object to the requirement in § 380.12(l)(3) that alternative route information be provided at the same level of detail as the proposed route at the time of the application. They want the Commission to clarify that generalized information on alternative routes can be provided at the time of filing while additional information is collected.

The Council states that the minimum filing requirements of Resource Report 4 (Cultural Resources) and Resource Report 10 (Alternatives) need to be coordinated.

Commission Response: The alternatives referred to in § 380.12(l) are alternatives the applicant considered in coming up with its proposal. The alternatives in § 380.12(l)(2) are not to be discussed in the same detail as the filed location since they were rejected in the initial screening. The applicant must, however, provide sufficient discussion for the Commission to understand why the alternatives were rejected. The alternatives in § 380.12(l)(3) should be discussed in more detail. Nevertheless, the only explicit requirement for material comparable to the proposed route is the maps showing the locations. The rest of the discussion does not require the same level of detail as long as tables of comparative environmental data can be provided. These tables should show the environmental reasons, if any, for not selecting the alternative and therefore should concentrate on the environmental features important to a comparison of the locations. The checklist clearly indicates that the same level of detail is not required at the time of filing.

As to the Council's request for coordination, none is needed. The contents of resource report 10 do not necessarily assume detailed on the ground survey work. The purpose is for the Commission to decide if more detailed review of an alternative is required. The Commission does expect that the applicant will have determined the proposed facility locations based on its knowledge of the presence or absence of cultural resources. In other words, the proposed route will already minimize the number of cultural resources affected. Under these circumstances there is no reason to provide the same level of coverage to alternative routes.

If there are cultural resources that fall under the consideration of section 106 that will still be affected by the proposed locations, then the Commission will determine the need to address alternative routes to avoid the effects. Avoidance is just another, albeit very important, mitigation measure available for consideration.

Section 380.13 Compliance with the Endangered Species Act

New §§ 380.13(b)(2)(i) and (iii) set forth the consultation requirements for compliance with the Endangered Species Act.

Comments: Williams argues that the time frame for which the U.S. Fish and Wildlife Service (FWS) has granted blanket clearances should govern, rather than putting a one-year limitation on such clearances.

Interior states that § 380.13(b)(2)(iii) should be modified to read:

> The consulted agency will provide a species and critical habitat list or concur with the species list provided within 30 days of its receipt of the initial request. In the event that the consulted agency does not provide this information within this time period, the project sponsor may notify the Director, OPR, and follow the procedures in paragraph (c) of this section.

Commission Response: The reason the specifications in §§ 380.13(b)(2)(i) and (ii) use a one-year expiration for FWS clearances is that the FWS regulations specify that informal consultation must be reinitiated within a year if the project hasn't started yet. The concern is that since new species are listed on a fairly regular basis, a clearance issued more than a year in advance may no longer be valid.

We agree with Interior's proposed change to § 380.13(b)(2)(iii) and will also clarify the intent of the last sentence by modifying the section to read:

> (iii) The consulted agency will provide a species and critical habitat list or concur with the species list provided within 30 days of its receipt of the initial request. In the event that the consulted agency does not provide this information within this time period, the project sponsor may notify the Director, OPR, and continue with the remaining procedures of this section.

Section 380.13(b)(3)(ii)(B)

Comments: Interior requests that § 380.13(b)(3)(ii)(B) be modified to read:

> ''That the project is not likely to adversely affect a listed species or critical habitat.''

Commission Response: It is not clear what the intent of this comment is, since the NOPR did not propose a § 380.13(b)(3)(ii)(B). However, if Interior's intent was to remove the reference to a time frame for response from the consulted agency because it is redundant with the similar statement in § 380.13(b)(2)(iii), we will accept that comment. We will also modify § 380.13(b)(3) to clarify the effect of what the NOPR referred to as a ''finding of no impact.'' Section 380.13(b)(3) will read as follows:

> (3) *End of informal consultations.* (i) At any time during the informal consultations, the consulted agency may determine or confirm: (A) That no listed or proposed species, or designated or proposed critical habitat, occurs in the project area; or (B) that the project is not likely to adversely affect a listed species or critical habitat. (ii) If the consulted agency provides this determination or confirmation then no further consultation is required.

Informal Consultations

Comments: Interior states that § 380.13(b)(5)(i) should be modified to read:

> If the consulted agency initially determines, pursuant to the informal consultations, that a listed species or its designated critical habitat may occur in the project area, the project sponsor must continue informal consultations with the consulted agency to determine if the proposed project may affect the species or designated critical habitat.

Commission Response: We agree with Interior and will modify the first sentence as suggested.

Formal Consultations

Comments: Interior states that § 380.13(d)(3) should be modified to read:

> The Formal Consultation period concludes within 90 days of initiation, and the final biological opinion will be delivered within 45 days thereafter. The consultation can not be extended for more than 60 days without the consent of the project sponsor (50 CFR 402.14(e)).

Commission Response: We believe that this modification does not differ from the proposed wording of §§ 380.13(d)(3) and (4), therefore it will not be used.

Section 380.14 Compliance with the National Historic Preservation Act

New § 380.14 concerns compliance with the National Historic Preservation Act.

Comments: Duke Energy and INGAA state that the proposal requires pipelines to consult with State Historic Preservation Officers (SHPOs). They argue that if SHPOs issue blanket clearances for a certain time period, as are often issued by the FWS and

National Marine Fisheries Service for compliance with the Endangered Species Act, the rule should not require consultations. They contend that this position is consistent with the proposal in § 380.13(b)(2).

Williams shares the same concern and proposes that § 380.14(a)(3) provide for blanket clearances. Williams believes that five year clearances are appropriate in the context of cultural resources when it may not be valid in the context of endangered species. It states that the status of endangered species and their critical habitat can change with some frequency, but cultural resources are in-place and static.

The Council makes several comments specific to § 380.14. It claims that the proposed rule does not distinctly spell out the Commission's nondelegable responsibility for decision-making under the NHPA. It believes it is unclear if all reports listed in § 380.14 and the guidance, including the Treatment Plan, are required at filing. It also points out that § 380.14 fails to reference the Council's regulations at 36 CFR part 800. In line with its earlier comments concerning involvement of Indian tribes, it states that Indian tribes must be consulted whenever ''an undertaking may affect properties of historic value to an Indian tribe on non-Indian lands.'' (36 CFR 800.1(c)(iii)). It suggests that terms of art such as ''undertaking'' should be defined. Finally, the Council asks the intent of § 380.14(d).

Commission Response: We do not currently, nor do we propose to set any time limits on the acceptability of letters demonstrating consultation with the SHPO unless the SHPO sets time limits. If the SHPO has provided consultation comments for a category of undertakings, the applicant may submit that letter as documentation of consultation. We will look at the letter and make sure it applies to the type of project proposed and that there are no circumstances which require Native Americans or others to be consulted, or other material to be filed.

We disagree with the Council that our responsibilities are not properly identified. In the first sentence of section 380.14 the regulation clearly states *our* responsibility to ''take into account the effect of a proposed project on any historic property and to afford the Advisory Council on Historic Preservation (Council) an opportunity to comment on the undertaking.'' We go on to indicate that the project sponsor will *assist* us in this endeavor. We believe this is adequate recognition of our responsibilities under section 106.

We believe that the rule clearly identifies filing requirements in at least two places. First, Appendix A, which contains the minimum filing requirements, clearly states that ''Overview/Survey Reports'' are required. This is also explicitly stated at § 380.12(f)(2). Second, § 380.12(f)(3) explicitly states that the Evaluation Report and Treatment Plan must be filed before a final certificate is issued.

We will add specific reference to the Council regulations in § 380.14(a) to read:

> ''* * * obligations under NHPA section 106 and the implementing regulations at 36 CFR part 800 by following the procedures at* * *''

We already have included Indian tribes in § 380.14 (a) and § 380.14(d)—and not just for tribal lands, but as interested parties.

''Undertaking'' is really the only term of art used in the rule itself. All of the terms which may need definition are found in the guidelines and are either defined there or are stated to be as defined in 36 CFR part 800. We will replace the term ''undertaking'' in the rule since it may be unclear and implies, incorrectly, that all projects filed at the Commission are undertakings as defined in 36 CFR 800.2. We will modify § 380.14(a) to read:

> ''* * * opportunity to comment projects if required under 36 CFR part 800. The project sponsor,* * *''

The comment questioning the intent of § 380.14(d) refers to proposed § 380.14(a)(4) and overlooks the fact that it lists the Council as one of the parties to the kind of ''agreement document'' under consideration. There is no reason to refer to the Council's comment when, in fact, such a document could very well incorporate the Council's comments implicitly. If it didn't, we presume that the Council would have made sure that getting such comments was explicitly mentioned. We contemplated that the Council would be a signatory to such an agreement.

Section 380.15 Siting and maintenance requirements.

New § 380.15 reflects the facility siting guidelines currently at § 2.69.

Comments: INGAA contends that the Commission should continue to treat these provisions as guidelines. It believes that a rigid application of these provisions could limit the balancing necessary to properly site a pipeline facility.

The Council states that in § 380.15 and elsewhere, wording should be revised so that the efforts to avoid as well as minimize effects to historic properties can be considered.

Commission Response: INGAA is concerned § 380.15 now includes the word ''requirements'' in the title and therefore it might be more restrictive. The title has changed but the wording is basically the same. The current regulations at § 157.14(a)(6–c) requires that the applicant swear that these guidelines have been adopted and will be issued to the appropriate personnel and that the applicant provide a description of how they will be implemented. The new section avoids the need for a separate sworn exhibit, but adds no different obligation on the applicant. In the future, as now, the applicant is expected to use the guidelines. In addition, the wording continues to specify that the guidelines are to be used as practicable. Of course, the applicant can be asked to explain its failure to follow the guidelines and justify a decision that some part of them is not practical.

We agree with the Council that avoidance of historic properties, where practical, is extremely important. That is why the proposed rule included this wording at § 380.15(d)(2). However, in response to this comment we will add similar wording at the lead-in to this section at § 380.15(a). We will change § 380.15(a) to read

> ''* * * undertaken in a way that avoids or minimizes effects on scenic,* * *''.

On further review, we note that old § 2.69(a)(3)(vi) was inadvertently left out of § 380.15. We will include a slightly modified version at new § 380.15(f)(5).

G. Part 385—Rules of Practice and Procedure

Part 385 sets forth the Commission's Rules of Practice and Procedure. The Commission is proposing to revise certain of the regulations under subpart T relating to the rejection of filings and to electronic filing of applications.

Subpart T—Formal Requirements for Filings in Proceedings Before the Commission

Section 385.2001—Filings (Rule 2001)

Consistent with our proposal to reject patently deficient filings under § 157.8 and § 157.205(d), the Commission proposes to modify § 385.2001(b)(3), dealing with rejection of filings, to provide for a letter of rejection indicating the reasons for rejection.

IV. Information Collection Statement

The Office of Management of Budget's (OMB) regulations in 5 CFR 1320.11 require that it approve certain reporting and record keeping requirements (collections of information) imposed by an agency. Upon approval of a

collection of information, OMB shall assign an OMB control number and an expiration date. Respondents subject to the filing requirements of this Final Rule shall not be penalized for failing to respond to these collections of information unless the collections of information display valid OMB control numbers.

The collections of information related to the subject of this Final Rule fall under FERC–537, Gas Pipeline Certificates: Construction, Acquisition, and Abandonment (OMB Control No. 1902–00060); FERC–539, Gas Pipelines Certificate: Import/Export Related (OMB Control No. 1902–0062); and FERC–577, Environmental Impact Statement (Pipeline Certificate) (OMB Control No. 1902–0128).

Under this Final Rule, the overall burden of filing will be reduced based on the elimination of certain filings by the rule. Further, the burden will be reduced by the elimination of the requirement to report all but cost information for prior notice activity in the annual report. On the whole, the Commission estimates that the revised reporting schedule will reduce the existing reporting burden by a total of 8,284 hours. Therefore, the Commission believes the overall burden on the industry will be lessened over time by the changes in the Final Rule.

The burden estimates for complying with this proposed rule are as follows:

PUBLIC REPORTING BURDEN

[Estimated Annual Burden]

Data collection	No. of respondents	No. of responses	Hours of Response	Total annual hours
FERC–537	50	11.2	245.82	137,660
FERC–539	12	1	218	2,616
FERC–577	70	16.8	154	181,720

The total annual hours for collection (including record keeping) is estimated to be 321,996.

Information Collection costs: The average annualized cost for all respondents is projected to be the following:

Data collection	Annualized capital/sart-up costs	Annualized costs (operations & maintenance)	Total annualized costs
FERC–537	$30,000	$7,189,717	$7,219,717
FERC–539	7,200	136,639	143,829
FERC–577	0	9,494,751	9,494,751

The total annualized costs for collection is estimated to be $3,313,844.

None of the comments received in response to the NOPR specifically addressed the reporting burden or cost estimates. Further, we note that, as required under OMB's regulations, the Commission submitted the NOPR to OMB for review. OMB took no action on the NOPR. However, in response, OMB stated that the Commission should resubmit its information request when it takes final action.

Interested persons may obtain information on the reporting requirements by contacting the Federal Energy Regulatory Commission, 888 First Street, NE, Washington, DC 20426 [Attention: Michael Miller, Office of Chief Information Officer, Phone: (202) 208–1415, fax: (202) 208–2425, e-mail mike.miller@ferc.fed.us] or the Office of Management and Budget, Office of Information and Regulatory Affairs, Attention: Desk Officer for the Federal Energy Regulatory Commission, 725 17th Street, NW, Washington, DC, 20503, Phone: 202–395–3087, fax: 202 395–7285.

V. Environmental Analysis

The Commission is required to prepare an Environmental Assessment or an Environmental Impact Statement for any action that may have a significant adverse effect on the human environment.[34] The Commission has categorically excluded certain actions from these requirements as not having a significant effect on the human environment.[35] The actions taken here fall within categorical exclusions in the Commission's regulations for rules that are clarifying, corrective, or procedural, for information gathering, analysis, and dissemination, and for sales, exchange, and transportation of natural gas that requires no construction of facilities.[36] Therefore, an environmental assessment is unnecessary and has not been prepared in this rulemaking.

[34] Order No. 486, Regulations Implementing the National Environmental Policy Act, 52 FR 47897 (Dec. 17, 1987), FERC Stats. & Regs. Preambles 1986–1990 ¶30,783 (1987).

[35] 18 CFR 380.4.

[36] *See* 18 CFR 380.4(a)(2)(ii), 380.4(a)(5), 380.4(a)(27).

VI. Regulatory Flexibility Act Certification

The Regulatory Flexibility Act of 1980 (RFA)[37] generally requires a description and analysis of final rules that will have significant economic impact on a substantial number of small entities. The regulations adopted here impose requirements only on interstate pipelines, which are not small businesses. Accordingly, pursuant to section 605(b) of the RFA, the Commission hereby certifies that the regulations adopted herein will not have a significant adverse impact on a substantial number of small entities.

VII. Effective Date

These regulations become effective June 14, 1999. The Commission has concluded, with the concurrence of the Administrator of the Office of Information and Regulatory Affairs of OMB, that this rule is not a ''major rule'' as defined in section 251 of the Small Business Regulatory Enforcement Fairness Act of 1996.

[37] 5 U.S.C. 601–612.

List of Subjects

18 CFR Part 2

Administrative practice and procedure, Electric power, Natural gas, Pipelines, Reporting and recordkeeping requirements.

18 CFR Part 153

Exports, Imports, Natural gas, Reporting and recordkeeping requirements.

18 CFR Part 157

Administrative practice and procedure, Natural gas, Reporting and recordkeeping requirements.

18 CFR Part 284

Continental shelf, Incorporating by reference, Natural gas, Reporting and recordkeeping requirements.

18 CFR Part 375

Authority delegations (Government agencies), Seals and insignia, Sunshine Act.

18 CFR Part 380

Environmental impact statements, Reporting and recordkeeping requirements.

18 CFR Part 385

Administrative practice and procedure, Electric power, Penalties, Pipelines, Reporting and recordkeeping.

By the Commission.

David P. Boergers,

Secretary.

In consideration of the foregoing, the Commission proposes to amend parts 2, 153, 157, 284, 375, 380, 381 and 385, Chapter I, Title 18, Code of Federal Regulations, as follows:

PART 2—GENERAL POLICY AND INTERPRETATIONS

1. The authority citation for part 2 continues to read as follows:

Authority: 5 U.S.C. 601; 15 U.S.C. 717–717w, 3301–3432; 16 U.S.C. 792–825y, 2601–2645; 42 U.S.C. 4321–4361, 7101–7352.

§ 2.1 [Amended]

2. In § 2.1, paragraph (a)(1)(viii)(A)–(D) are removed.

3. In § 2.55, paragraph (a) is revised; (b)(1)(ii) is revised; (b)(4)(i) is removed and (b)(4)(ii) redesignated as (b)(4); and paragraph (d) is removed and reserved, to read as follows:

§ 2.55 Definition of terms used in section 7(c).

* * * * *

(a) *Auxiliary installations.* (1) Installations (excluding gas compressors) which are merely auxiliary or appurtenant to an authorized or proposed transmission pipeline system and which are installations only for the purpose of obtaining more efficient or more economical operation of the authorized or proposed transmission facilities, such as: Valves; drips; pig launchers/receivers; yard and station piping; cathodic protection equipment; gas cleaning, cooling and dehydration equipment; residual refining equipment; water pumping, treatment and cooling equipment; electrical and communication equipment; and buildings.

(2) *Advance notification.* If auxiliary facilities are to be installed:

(i) On existing transmission facilities, then no notification is required;

(ii) On, or at the same time as, certificated facilities which are not yet in service, then a description of the auxiliary facilities and their locations must be provided to the Commission at least 30 days in advance of their installation; or

(iii) On and at the same time as facilities that are proposed, then the auxiliary facilities must be described in the environmental report specified in § 380.12 or in a supplemental filing while the application is pending.

(b) * * *

(1) * * *

(ii) The replacement facilities will have a substantially equivalent designed delivery capacity, will be located in the same right-of-way or on the same site as the facilities being replaced, and will be constructed using the temporary work space used to construct the original facility (See appendix A to this part 2 for guidelines on what is considered to be the appropriate work area in this context);

* * * * *

(d) [Reserved]

§ 2.69 [Removed]

4. § 2.69 is removed and reserved.

§ 2.102 [Removed]

5. Section 2.102 is removed and reserved.

6. New Appendix A to part 2 is added to read as follows:

Appendix A to Part 2—Guidance for Determining the Acceptable Construction Area for Replacements

These guidelines shall be followed to determine what area may be used to construct the replacement facility. Specifically, they address what areas, in addition to the permanent right-of-way, may be used.

Pipeline replacement must be within the existing right-of-way as specified by § 2.55(b)(1)(ii). Construction activities for the replacement can extend outside the current permanent right-of-way if they are within the temporary and permanent right-of-way and associated work spaces used in the original installation.

If documentation is not available on the location and width of the temporary and permanent rights-of-way and associated work space that was used to construct the original facility, the company may use the following guidance in replacing its facility, provided the appropriate easements have been obtained:

a. Construction should be limited to no more than a 75-foot-wide right-of-way including the existing permanent right-of-way for large diameter pipeline (pipe greater than 12 inches in diameter) to carry out routine construction. Pipeline 12 inches in diameter and smaller should use no more than a 50-foot-wide right-of-way.

b. The temporary right-of-way (working side) should be on the same side that was used in constructing the original pipeline.

c. A reasonable amount of additional temporary work space on both sides of roads and interstate highways, railroads, and significant stream crossings and in side-slope areas is allowed. The size should be dependent upon site-specific conditions. Typical work spaces are:

Item	Typical extra area (width/length)
Two lane road (bored).	25–50 by 100 feet.
Four lane road (bored).	50 by 100 feet.
Major river (wet cut)	100 by 200 feet.
Intermediate stream (wet cut).	50 by 100 feet.
Single railroad track ..	25–50 by 100 feet.

d. The replacement facility must be located within the permanent right-of-way or, in the case of nonlinear facilities, the cleared building site. In the case of pipelines this is assumed to be 50-feet-wide and centered over the pipeline unless otherwise legally specified.

However, use of the above guidelines for work space size is constrained by the physical evidence in the area. Areas obviously not cleared during the original construction, as evidenced by stands of mature trees, structures, or other features that exceed the age of the facility being replaced, should not be used for construction of the replacement facility.

If these guidelines cannot be met, the company should consult with the Commission's staff to determine if the exemption afforded by § 2.55 may be used. If the exemption may not be used, construction authorization must be obtained pursuant to another regulation under the Natural Gas Act.

PART 153—APPLICATIONS FOR AUTHORIZATION TO CONSTRUCT, OPERATE, OR MODIFY FACILITIES FOR THE EXPORT OR IMPORT OF NATURAL GAS

7. The authority citation for part 153 continues to read as follows:

Authority: 15 U.S.C. 717b, 717o; E.O. 10485, 3 CFR, 1949–1953 Comp., p. 970, as amended by E.O. 12038, 3 CFR, 1978 Comp., p. 136, DOE Delegation Order No. 0204–112, 49 FR 6684 (February 22, 1984).

8. In § 153.8, paragraph (a)(7) is revised to read as follows:

§ 153.8 Required exhibits.

(a) * * *

(7) *Exhibit F.* (i) An environmental report as specified in § 380.3 and § 380.12 of this chapter. Applicant must submit all appropriate revisions to Exhibit F whenever route or site changes are filed. These revisions should identify the specific differences resulting from the route or site changes, and not just provide revised totals for the resources affected; and

* * * * *

9. In § 153.21, paragraph (b) is revised to read as follows:

§ 153.21 Conformity with requirements.

* * * * *

(b) *Rejection of applications.* If an application patently fails to comply with applicable statutory requirements or with applicable Commission rules, regulations, and orders for which a waiver has not been granted, the Director of the Office of Pipeline Regulation may reject the application within 10 days of filing as provided by § 385.2001(b) of this chapter. This rejection is without prejudice to an applicant's refiling a complete application. However, an application will not be rejected solely on the basis of: Environmental reports that are incomplete because the company has not been granted access by the affected landowner(s) to perform required surveys, or environmental reports that are incomplete, but where the minimum checklist requirements of part 380, appendix A of this chapter have been met. An application that relates to an operation, service, or construction concerning which a prior application has been filed and rejected, shall be docketed as a new application. Such new application shall state the docket number of the prior rejected application.

PART 157—APPLICATIONS FOR CERTIFICATES OF PUBLIC CONVENIENCE AND NECESSITY AND FOR ORDERS PERMITTING AND APPROVING ABANDONMENT UNDER SECTION 7 OF THE NATURAL GAS ACT

10–11. The authority citation for Part 157 continues to read as follows:

Authority: 15 U.S.C. 717–717W, 3301–3432; 42 U.S.C. 7101– 7352.

12. In § 157.6, paragraphs(a) is revised; the heading of paragraph (b) is revised; a new sentence is added to paragraph (b)(7) and a new paragraph (b)(8) is added to read as follows:

§ 157.6 Applications; general requirements.

(a) *Applicable rules*—(1) *Submission required to be furnished by applicant under this subpart.* Applications, amendments thereto, and all exhibits and other submissions required to be furnished by an applicant to the Commission under this subpart must be submitted in an original and 7 conformed copies. To the extent that data required under this subpart has been provided to the Commission, this data need not be duplicated. The applicant must, however, include a statement identifying the forms and records containing the required information and when that form or record was submitted.

(2) The following must be submitted in electronic format as prescribed by the Commission:

(i) Applications filed under this part 157 and all attached exhibits;

(ii) Applications covering acquisitions and all attached exhibits;

(iii) Applications for temporary certificates and all attached exhibits;

(iv) Applications to abandon facilities or services and all attached exhibits;

(v) The progress reports required under § 157.20(c) and (d);

(vi) Applications submitted under subpart E of this part and all attached exhibits;

(vii) Applications submitted under subpart F of this part and all attached exhibits;

(viii) Requests for authorization under the notice procedures established in § 157.205 and all attached exhibits;

(ix) The annual report required by § 157.207;

(x) The report required under § 157.214 when storage capacity is increased;

(xi) Amendments to any of the foregoing.

(3) All filings must be signed in compliance with the following.

(i) The signature on a filing constitutes a certification that: The signer has read the filing signed and knows the contents of the paper copies and electronic filing; the paper copies contain the same information as contained in the electronic filing; the contents as stated in the copies and in the electronic filing are true to the best knowledge and belief of the signer; and the signer possesses full power and authority to sign the filing.

(ii) A filing must be signed by one of the following:

(A) The person on behalf of whom the filing is made;

(B) An officer, agent, or employee of the governmental authority, agency, or instrumentality on behalf of which the filing is made; or,

(C) A representative qualified to practice before the Commission under § 385.2101 of this chapter who possesses authority to sign.

(4) Suitable means of electronic transmission or electronic media suitable for Commission filings are listed in the instructions for each form and filing. Lists of suitable electronic media are available upon request from the Commission. The formats for the electronic filing and paper copy can be obtained at the Federal Energy Regulatory Commission, Public Information and Reference Branch, 888 First Street, NE., Washington, DC 20426.

(5) Other requirements. Applications under section 7 of the Natural Gas Act must conform to the requirements of §§ 157.5 through 157.14. Amendments to or withdrawals of applications must conform to the requirements of §§ 385.213 and 385.214 of this chapter. If the application involves an acquisition of facilities, it must conform to the additional requirements prescribed in §§ 157.15 and 157.16. If the application involves an abandonment of facilities or service, it must conform to the additional requirements prescribed in § 157.18.

(b) *General content of application.*

* * *

(7) * * * The form of notice shall also include the name, address, and telephone number of an authorized contact person.

(8) For applications to construct new facilities, the complete information necessary for the Commission to make an upfront determination on the rate treatment of the proposed project in accordance with the Statement of Policy in Docket No. PL94–4–000, unless the applicant propose to charge incremental rates that are at or above the effective maximum part 284 rate. The Policy Statement can be found at 71 FERC ¶61,241 (1995). Such information should include, but is not limited to the following:

(i) Documentation specifically showing that an expansion project will increase system or operational reliability, or provide other financial benefits;

(ii) Detailed cost-of-service data supporting the cost of the expansion project, a detailed study showing the revenue responsibility for each firm rate schedule under the pipeline's currently effective rate design and under the pipeline's proposed rolled-in rate

design, a detailed rate impact analysis by rate schedule (including by zone, if applicable), and an analysis reflecting the impact of the fuel usage resulting from the proposed expansion project (including by zone, if applicable).

* * * * *

13. § 157.8 is revised to read as follows:

§ 157.8 Acceptance for filing or rejection of applications.

Applications will be docketed when received and the applicant so advised. If an application patently fails to comply with applicable statutory requirements or with applicable Commission rules, regulations, and orders for which a waiver has not been granted, the Director of the Office of Pipeline Regulation may reject the application within 10 days of filing as provided by § 385.2001(b) of this chapter. This rejection is without prejudice to an applicant's refiling a complete application. However, an application will not be rejected solely on the basis of: Environmental reports that are incomplete because the company has not been granted access by the affected landowner(s) to perform required surveys, or Environmental reports that are incomplete, but where the minimum checklist requirements of part 380, appendix A of this chapter have been met. An application which relates to an operation, sale, service, construction, extension, acquisition, or abandonment concerning which a prior application has been filed and rejected, shall be docketed as a new application. Such new application shall state the docket number of the prior rejected application.

14. In § 157.9, the first sentence is revised to read as follows:

§ 157.9 Notice of application.

Notice of each application filed, except when rejected in accordance with § 157.8, will be issued within 10 days of filing, and subsequently will be published in the **Federal Register** and copies of such notice mailed to States affected thereby. * * *

15. Section 157.10 is revised to read as follows:

§ 157.10 Interventions and protests.

Notices of applications, as provided by § 157.9, will fix the time within which any person desiring to participate in the proceeding may file a petition to intervene, and within which any interested regulatory agency, as provided by § 385.214 of this chapter, desiring to intervene may file its notice of intervention. Any person filing a petition to intervene or notice of intervention shall state specifically whether he seeks formal hearing on the application. Any person may file to intervene on environmental grounds based on the draft environmental impact statement as stated at § 380.10(a)(1)(i) of this chapter. In accordance with that section, such intervention will be deemed timely as long as it is filed within the comment period for the draft environmental impact statement. Failure to make timely filing will constitute grounds for denial of participation in the absence of extraordinary circumstances or good cause shown. A copy of each application, supplement and amendment thereto, including exhibits required by §§ 157.14, 157.16, and 157.18, shall upon request be promptly supplied by the applicant to anyone who has filed a petition for leave to intervene or given notice of intervention. However, an applicant is not required to serve voluminous or difficult to reproduce material, such as copies of environmental information, to all parties, unless such material is specifically requested. Complete copies of the application must be available in each county in the project area, either in paper or electronic format, within three business days of filing an application. Within five business days of receiving a request for a complete copy from any party, the applicant must serve a full copy of any filing on the requesting party. Pipelines must keep all voluminous material on file with the Commission and make such information available for inspection at buildings with public access and with evening and weekend business hours, such as libraries located in each county in the project area. Protests may be filed in accordance with § 385.211 of this chapter within the time permitted by any person who does not seek to participate in the proceeding.

16. In § 157.14, paragraph (a) is amended to remove the words ''On or after October 31, 1989, exhibits'' and the word ''Exhibits'' is added in its place; paragraph (a)(6-a) is revised; paragraph (a)(6-b), (a)(6-c) and (a)(6-d) are removed; paragraph (a)(12) is removed and reserved; paragraphs (a)(14)(i)-(vi) are revised; and paragraphs (a)(14) (vii)-(xiii) are removed, all to read as follows:

§ 157.14 Exhibits.

(a) * * *

(6-a) *Exhibit F–I, Environmental Report.* An environmental report as specified in §§ 380.3 and 380.12 of this chapter. Applicant must submit all appropriate revisions to Exhibit F–I whenever route or site changes are filed. These revisions should identify the locations by mile post and describe all other specific differences resulting from the route or site changes, and should not simply provide revised totals for the resources affected.

* * * * *

(12) [Reserved]

* * * * *

(14) * * *

(i) A description of the class (e.g., commercial paper, long-term debt, preferred stock) and cost rates for securities expected to be issued with construction period and post-operational sources of financing separately identified.

(ii) Statement of anticipated cash flow, including provision during the period of construction and the first 3 full years of operation of proposed facilities for interest requirements, dividends, and capital requirements.

(iii) A balance sheet and income statement (12 months) of most recent data available.

(iv) Comparative pro forma balance sheets and income statements for the period of construction and each of the first 3 full years of operation, giving effect to the proposed construction and proposed financing of the project.

(v) Any additional data and information upon which applicant proposes to rely in showing the adequacy and availability of resources for financing its proposed project.

(vi) In instances for which principal operations of the company have not commenced or where proposed rates for services are developed on an incremental basis, a brief statement explaining how the applicant will determine the actual allowance for funds used during construction (AFUDC) rate, or if a rate is not to be used, how the applicant will determine the actual amount of AFUDC to be capitalized as a component of construction cost, and why the method is appropriate under the circumstances.

* * * * *

17. In § 157.16, paragraph (c)(1) is revised to read as follows:

§ 157.16 Exhibits relating to acquisitions.

* * * * *

(c) * * *

(1) The amounts recorded upon the books of the vendor, as being applicable to the facilities to be acquired, and the related depreciation, depletion, and amortization reserves. Include a brief statement explaining the basis or methods used to derive the related depreciation, depletion and amortization reserves.

* * * * *

§ 157.17 [Amended]

18. In § 157.17, the words ''Before October 31, 1989, and thereafter whenever'' are removed from paragraph (a) and the word ''Whenever'' is added in their place; and the words ''On or after October 31, 1989, the'' are removed from paragraph (b) and the word ''The'' is added in their place.

19. In § 157.18, new sentences are added between the first and second sentence in the introductory text and paragraph (f)(2); and the first sentence in paragraph (f)(3) is revised to read as follows:

§ 157.18 Applications to abandon facilities or service; exhibits.

* * * Any application for an abandonment that is not excluded by § 380.4(a)(28) or (29), must include an environmental report as specified by § 380.3(c)(2). * * *

* * * * *

(f) * * *

(2) * * * Include a brief statement explaining the basis or methods used to derive the accumulated depreciation related to the property to be disposed of. * * *

(3) State the amount of accumulated deferred income taxes attributable to the property to be abandoned and the tax basis of the property. * * *

* * * * *

20. In § 157.20, paragraph (b) is revised; the phrases '', until October 13, 1989,'' and '' and thereafter,'' are removed from paragraph, (c) introductory text, and paragraph (c)(2) is removed; paragraphs (c)(3) and (c)(4) are redesignated as (c)(2) and (c)(3); the phrases '', before October 13, 1989,'' and ''and thereafter'' are removed from paragraph (d), introductory text and paragraph (d)(1) is removed; paragraph (d)(2) and (d)(3) are redesignated as (d)(1) and (d)(2); redesignated paragraph (d)(2) is revised; paragraph (f) is removed; paragraph (g) is redesignated as (f) to read as follows:

§ 157.20 General conditions applicable to certificates.

* * * * *

(b) Any authorized construction, extension, or acquisition shall be completed and made available for service by applicant and any authorized operation, service, or sale shall be available for regular performance by applicant within (period of time to be specified by the Commission in each order) from the issue date of the Commission's order issuing the certificate. Applicant shall notify the Commission in writing no later than 10 days after expiration of this time period that the end-user/shipper is unable to meet the imposed timetable to commence service.

* * * * *

(d) * * *

(2) within 10 days after authorized facilities have been constructed and within 10 days after such facilities have been placed in service or any authorized operation, sale, or service has commenced, notice of the date of such completion, placement, and commencement, and

* * * * *

§ 157.21 [Removed]

21. Section 157.21 is removed and reserved.

22. In § 157.102, the last sentence in paragraph (a)(1) is removed; paragraph (b)(1)(v) is revised to read as follows:

§ 157.102 Contents of application and other pleadings.

* * * * *

(b) * * *

(1) * * *

(v) An environmental report as specified in § 380.3 and § 380.12 of this chapter. Applicant must submit all appropriate revisions to the environmental report whenever route or site changes are filed. These revisions must identify and describe the specific differences resulting from the route or site changes. Revised totals for the resources affected will not be sufficient; and

* * * * *

§ 157.103 [Amended]

23. In § 157.103(j), the words ''and Producer'' are removed from the reference to the ''Office of Pipeline and Producer Regulation.''

§ 157.201 [Amended]

24. In § 157.201(a) the words ''sales arrangements'' are removed.

25. In § 157.202, paragraphs (b)(2)(i) and (ii)(A), (B), (D), (E), and (F), and paragraphs (b)(4), (5), (6), (7), (10) and (12) are revised; and (b)(13)–(14) are removed to read as follows:

§ 157.202 Definitions.

* * * * *

(b) * * *

(2)(i) *Eligible facility* means, except as provided in paragraph (b)(2)(ii) of this section, any facility subject to the Natural Gas Act jurisdiction of the Commission that is necessary to provide service within existing certificated levels. Eligible facility also includes any gas supply facility or any facility, including receipt points, needed by the certificate holder to receive gas into its system for further transport or storage, and interconnecting points between transporters that transport natural gas under Part 284 of this chapter. Further, eligible facility includes main line, lateral, and compressor replacements that do not qualify under § 2.55(b) of this chapter because they will result in an incidental increase in the capacity of main line facilities, or because they will not satisfy the location or work space requirements of § 2.55(b). Replacements must be done for sound engineering purposes. Replacements for the primary purpose of creating additional main line capacity are not eligible facilities.

(ii) * * *

(A) A main line of a transmission system, except replacement facilities covered under § 157.202(b)(2)(i).

(B) An extension of a main line, except replacement facilities covered under § 157.202(b)(2)(i).

* * * * *

(D) A facility required to test, develop or utilize an underground storage field or that alters the certificated capacity, deliverability, or storage boundary, or a facility required to store gas above ground in either a gaseous or liquified state, or a facility used to receive gas from plants manufacturing synthetic gas or from plants gasifying liquefied natural gas.

(E) Delivery points under § 157.211.

(F) Temporary compression under § 157.209.

* * * * *

(3) * * *

(4) *Temporary compression* means compressor facilities installed and operated at existing compressor locations for the limited purpose of temporarily replacing existing permanent compressor facilities that are undergoing maintenance or repair or that are pending permanent replacement.

(5) *Main line* means the principal transmission facilities of a pipeline system extending from supply areas to market areas and does not include small diameter supply or delivery laterals or gathering lines.

(6) *Miscellaneous rearrangement of any facility* means any rearrangement of a facility that does not result in any change of service rendered by means of the facilities involved, including changes in existing field operations or relocation of existing facilities:

(i) On the same property;

(ii) When required by highway construction, dam construction, or the expansion or change of course of rivers, streams or creeks; or

(iii) To respond to other natural forces beyond the certificate holder's control when necessary to ensure safety or maintain the operational integrity of the certificate holder's facilities.

(7) *Project* means a unit of improvement or construction that is used and useful upon completion.

* * * * *

(10) *Delivery point* means a tap and/or metering and appurtenant facilities, such as heaters, minor gas conditioning, treatment, odorization, and similar equipment, necessary to enable the certificate holder to deliver gas to any party.

* * * * *

(12) *Interconnecting point* means only the interconnecting facilities such as the tap, metering, M&R facilities and minor related piping.

* * * * *

§ 157.203 [Amended]

26. In § 157.203, paragraph(b) is amended to change the reference from ''§ 157.211(a)'' to ''§ 157.211(a)(1),'' remove the references to ''§ 157.213(a)'' and ''§ 157.217'' and to add the reference to ''§ 157.209(a)'' in their place. Paragraph (c) is amended to remove the references to ''§ 157.211, ''§ 157.211(b)'' and ''§ 157.212, § 157.213(b)'' and to add the reference ''§ 157.211(a)(2)'' in their place.

§ 157.204 [Amended]

27. In § 157.204, paragraph (d)(2) is removed; paragraph (d)(3) is redesignated as d(2); and paragraphs (d)(3), (4), and (5) and paragraph (e) are removed.

28. In § 157.205, paragraphs (a), introductory text, and (b), introductory text, are revised; paragraph (c) is removed; paragraphs (d)—(i) are redesignated as (c)—(h); in paragraph(a)(2) add the words ''or dismissed'' after the word ''withdrawn''; a sentence is added at the end of paragraph (b)(5); in paragraph (b)(6) the reference to ''paragraph (d)'' is changed to ''paragraph (c)''; redesignated paragraph (c) is revised; in redesignated paragraph (d) the first sentence is revised; in redesignated paragraph (f) the words ''and Producer'' are removed from the reference to the ''Director of Pipeline and Producer Regulation''; the form in redesignated paragraph (e)(2) is revised; in redesignated paragraph (f) add the words ''or dismissed'' after the words ''is not withdrawn''; and in redesignated paragraph (g) the heading is revised, the words ''and staff'' are removed and the word ''and'' is added between ''certificate holder'' and ''protestor'', and sentences are added at the end of the paragraph to read as follows:

§ 157.205 Notice Procedure.

(a) Applicability. No activity described in §§ 157.208(b), 157.211(a)(2), 157.214 or 157.216(b) is authorized by a blanket certificate granted under this subpart, unless, prior to undertaking such activity:

* * * * *

(b) Contents. For any activity subject to the requirements of this section, the certificate holder must file with the Secretary of the Commission an original and seven copies, as prescribed in §§ 157.6(a) and 385.2011 of this chapter, a request for authorization under the notice procedures of this section that contains:

* * * * *

(5) * * * The form of notice shall also include the name, address, and telephone number of an authorized contact person.

* * * * *

(c) Rejection of request. The Director of the Office of Pipeline Regulation shall reject within 10 days of the date of filing a request which patently fails to comply with the provisions of paragraph (b) of this section, without prejudice to the pipeline's refiling a complete application.

(d) Publication of notice of request. Unless the request has been rejected pursuant to paragraph (c) of this section, the Secretary of the Commission shall issue a notice of the request within 10 days of the date of the filing, which will then be published in the **Federal Register**. * * *

(e) * * *

(2) * * *

United States of America Before the Federal Energy Regulatory Commission

[Name of pipeline holding the blanket certificate] Docket No. [Include both docket no. of the blanket certificate and the prior notice transaction]

Protest to Proposed Blanket Certificate Activity

(Name of Protestor) hereby protests the request filed by (Name of pipeline) to conduct a (construction of facilities, abandonment, etc.) under § 157.—— of the Commission's regulations. Protestor seeks to have this request processed as a separate application.

(Include a detailed statement of Protestor's interest in the activity and the specific reasons and rationale for the objection and whether the protestor seeks to be an intervener.)

* * * * *

(g) Withdrawal or dismissal of protests. * * * Within 10 days of the filing of a protest, the Director of the Office of Pipeline Regulation will dismiss that protest if it does not raise a substantive issue and fails to provide any specific detailed reason or rationale for the objection. If a protest is dismissed, the notice requirements of this section will not be fulfilled until the earlier of: (1) a 30 day period following the deadline determined in paragraph (d) of this section has run; or the dismissed protesting party notifying the Secretary of the Commission that its concerns have been resolved.

* * * * *

29. In § 157.206, paragraphs (b) and (c) are removed; paragraph (d) is redesignated as paragraph (b); paragraph (f) is redesignated as (c); paragraph (g) is redesignated as (d); redesignated (b) is amended to add an introductory text; redesignated (b)(1) is revised; in redesignated (b)(3)(i)–(iii) the references to paragraph (d) are removed and a reference to (b) is added in its place; redesignated (b)(5) is revised; redesignated paragraph (c) is revised; and paragraphs (e)–(h) are removed to read as follows:

§ 157.206 Standard conditions.

* * * * *

(b) *Environmental compliance.* This paragraph only applies to activities that involve ground disturbance or changes to operational air and noise emissions.

(1) The certificate holder shall adopt the requirements set forth in § 380.15 of this chapter for all activities authorized by the blanket certificate and shall issue the relevant portions thereof to construction personnel, with instructions to use them.

* * * * *

(5) The noise attributable to any new compressor station, compression added to an existing station, or any modification, upgrade or update of an existing station, must not exceed a day-night level (L_{dn}) of 55 dBA at any pre-existing noise-sensitive area (such as schools, hospitals, or residences).

* * * * *

(c) *Commencement.* Any authorized construction, extension, or acquisition shall be completed and made available for service by the certificate holder and any authorized operation, or service, shall be available within one year of the date the activity is authorized pursuant to § 157.205(h). The certificate holder may apply to the Director of the Office of Pipeline Regulation for an extension of this deadline due to construction delays. However, if the request for extension is due to the end-user/shipper not being ready to accept service, the certificate holder must so notify the Commission in writing no later than 10 days after expiration of the one-year period.

30. In § 157.207, paragraphs (b) and (c) are revised; paragraph (f) is removed; paragraphs (g) and (h) are redesignated

as paragraphs (f) and (g) and paragraph (h) is removed to read as follows:

§ 157.207 General reporting requirements.

* * * * *

(b) For each delivery point authorized under § 157.211(a)(1), the information required by § 157.211(c);

(c) for each temporary compressor facility under § 157.209, the information required by § 157.209(b);

* * * * *

31. In § 157.208, the heading is revised; the paragraph designations (1) and (2) are removed from paragraphs (a) and (b); in paragraphs (a) and (b) add the word ''replace'' after the word ''construct'' and add a new sentence at the end; remove paragraphs (c)(6) and (c)(8); paragraph (c)(7) is redesignated as (c)(6), paragraphs (c)(9)–(11) are redesignated as (c)(7)–(9); in redesignated (c)(9) the first sentence is revised and a new sentence is added at the end; in paragraph (d) the reference to ''GNP'' is removed and a reference to ''GDP'' is added in its place, the words ''and Producer'' are removed from the phrase ''Director of Pipeline and Producer Regulation'', and the reference to § 375.307(t) is corrected to § 375.307(d); paragraph (e), the introductory text, and paragraph (e)(2) are revised, paragraphs (e)(4) and (e)(5) are removed; paragraph (e)(8) is redesignated as (e)(4), paragraph (e)(9) is redesignated as (e)(5), and paragraphs (e)(6) and (7) are removed; the second sentence of paragraph (f)(2) is revised; and in paragraph (g) the words ''and Producer'' are removed from the phrase ''Director of Pipeline and Producer Regulation'' to read as follows:

§ 157.208 Construction, acquisition, operation, replacement, and miscellaneous rearrangement of facilities.

(a) * * * The certificate holder shall not segment projects in order to meet the cost limitations set forth in column 1 of Table I.

* * * * *

(b) * * * The certificate holder shall not segment projects in order to meet the cost limitations set forth in column 2 of Table I.

* * * * *

(c) * * *

(9) A concise analysis discussing the relevant issues outlined in § 380.12 of this chapter. * * * Include a copy of the agreements received for compliance with the Endangered Species Act, National Historic Preservation Act, and Coastal Zone Management Act.

* * * * *

(e) *Reporting requirements.* For each facility completed during the calendar year pursuant to paragraph (a) of this section, the certificate holder shall file in the manner prescribed in §§ 157.6(a) and 385.2011 of this chapter as part of the required annual report under § 157.207(a) the information described in paragraphs (e)(1)–(5) of this section. For each facility completed during the calendar year pursuant to paragraph (b) of this section, the certificate holder shall file in the manner prescribed above only the information described in paragraph (e)(3) of this section.

(1) * * *

(2) The specific purpose, location, and beginning and completion date of construction of the facilities installed, the date service commenced, and, if applicable, a statement indicating the extent to which the facilities were jointly constructed;

* * * * *

(f) * * *

(2) * * * In the event that the certificate holder thereafter wishes to change the maximum operating pressure of lateral facilities constructed under section 7(c) or facilities constructed under this section 157.208, it shall file an appropriate request pursuant to the procedures set forth in § 157.205(b).* * *

* * * * *

32. New § 157.209 is added to read as follows:

§ 157.209 Temporary compression facilities.

(a) *Automatic authorization.* If the cost does not exceed the cost limitations set forth in column 1 of Table I, under § 158.208(d) of this chapter, the certificate holder may install, operate and remove temporary facilities provided that the temporary compressor facilities shall not be used to increase the volume or service above that rendered by the involved existing permanent compressor unit(s).

(b) *Reporting requirements.* As part of the certificate holder's annual report of projects authorized under paragraph (a) of this section, the certificate holder must report the following in the manner prescribed in §§ 157.6(a) and 385.2011 of this chapter;

(1) A description of the temporary compression facility, including the size, type and number of compressor units;

(2) The location at which temporary compression was installed, operated and removed, including its location relative to existing facilities;

(3) A description of the permanent compression facility which was unavailable, and a statement explaining the reason for the temporary compression;

(4) The dates for which the temporary compression was installed, operated and removed; and

(5) If applicable, the information required in § 157.208(e)(4).

§ 157.210 [Removed]

33. Section 157.210 is removed and reserved.

34. In § 157.211, the heading, paragraphs (a), (b)(1)–(5), and (c)(1)–(3) are revised, a new paragraph (c)(4) is added, and paragraph (d) is removed to read as follows:

§ 157.211 Delivery points.

(a) *Construction and operation*—(1) *Automatic authorization.* The certificate holder may acquire, construct, replace, modify, or operate any delivery point, excluding the construction of certain delivery points subject to the prior notice provisions in paragraph (a)(2) of this section if:

(i) The natural gas is being delivered to, or for the account of, a shipper for whom the certificate holder is, or will be, authorized to transport gas; and

(ii) The certificate holder's tariff does not prohibit the addition of new delivery points.

(2) *Prior notice.* Subject to the notice procedure in § 157.205, the certificate holder may acquire, construct, replace, modify, or operate any delivery point if:

(i) The natural gas is being delivered to, or for the account of, an end-user that is currently being served by a local distribution company; and

(ii) The natural gas is being delivered to a shipper for whom the certificate holder is, or will be, authorized to transport gas; and

(iii) The certificate holder's tariff does not prohibit the addition of new delivery points.

(b) * * *

(1) The name of the end-user, the location of the delivery point, and the distribution company currently serving the end-user;

(2) A description of the facility and any appurtenant facilities;

(3) A USGS 7½-minute series (scale 1:24,000 or 1:25,000) topographic map (or map of equivalent or greater detail, as appropriate) showing the location of the proposed facilities;

(4) The quantity of gas to be delivered through the proposed facility;

(5) A description, with supporting data, of the impact of the service rendered through the proposed delivery tap upon the certificate holder's peak day and annual deliveries.

(c) * * *

(1) A description of the facilities acquired, constructed, replaced, modified or operated pursuant to this section;

(2) The location and maximum quantities delivered at such delivery point;

(3) The actual cost and the completion date of the delivery point; and

(4) The date of each agreement obtained pursuant to § 157.206(b)(3) and the date construction began.

§ 157.212 [Removed]

35. Section 157.212 is removed and reserved.

§ 157.213 [Removed]

36. Section 157.213 is removed and reserved.

37. In § 157.215, paragraph (a), introductory texts and paragraph (b)(1)(iii) are revised to read as follows:

§ 157.215 Underground storage testing and development.

(a) *Automatic authorization.* The certificate holder is authorized to acquire, construct and operate natural gas pipeline and compression facilities, including injection, withdrawal, and observation wells for the testing or development of underground reservoirs for the possible storage of gas, if:

* * * * *

(b) * * *

(1) * * *

(iii) The cost of such facilities, the date construction began, and the date they were placed in service;

* * * * *

38. In § 157.216, amend the introductory text of paragraph (a) to remove the words ''facilities, if'' and add the words ''facilities, and'' in its place; paragraphs (a) (1) and (2), (b), (c) (1) and (3), and (d) (1), (2), and (4) are revised; and new paragraphs (c)(5) and (d)(5) are added to read as follows:

§ 157.216 Abandonment.

(a) * * *

(1) a receipt or delivery point, or related supply or delivery lateral, provided the facility has not been used to provide:

(i) Interruptible transportation service during the one year period prior to the effective date of the proposed abandonment, or

(ii) Firm transportation service during the one year period prior to the effective date of the proposed abandonment, provided the point is no longer covered under a firm contract; or

(2) An eligible facility that was installed pursuant to automatic authority under § 157.208(a), or that now qualifies for automatic authority under § 157.208(a), provided the certificate holder obtains the written consent of the customers served through such facility. Consent is required from customers that have received service during the past 12 months.

(b) *Prior Notice.* Subject to the notice requirements of § 157.205, the certificate holder is authorized pursuant to section 7(b) of the Natural Gas Act to abandon:

(1) Any receipt or delivery point if all of the existing customers of the pipeline served through the receipt or delivery point consent in writing to the abandonment. When filing a request for authorization of the proposed abandonment under the notice procedures of § 157.205, the certificate holder shall notify, in writing, the State public service commission having regulatory authority over retail service to the customers served through the delivery point.

(2) Any other facility which qualifies as an eligible facility, and which is not otherwise eligible for automatic authorization under paragraph (a)(2) of this section, provided the certificate holder obtains the written consent of all of the customers served through such facility. Consent is required from customers that have received service during the immediate past 12 months.

(c) * * *

(1) The location, type, size, and length of the subject facilities;

* * * * *

(3) For each facility an oath statement that all of the customers served during the past year by the subject facilities have consented to the abandonment, or an explanation of why the customers' consent is not available;

* * * * *

(5) For any abandonment resulting in earth disturbance, a USGS 7½-minute-series (scale 1:24,000 or 1:25,000) topographic map (or map of equivalent or greater detail, as appropriate) showing the location of the proposed facilities.

(d) * * *

(1) A description of the facilities abandoned pursuant to this section;

(2) The docket number(s) of the certificate(s) authorizing the construction and operation of the facilities to be abandoned;

* * * * *

(4) The date earth disturbance, if any, related to the abandonment began and the date the facilities were abandoned; and

(5) The date of the agreements obtained pursuant to § 157.206(b)(3), if earth disturbance was involved.

39. In § 157.217 paragraph (a) and (b)(2) are revised to read as follows:

§ 157.217 Changes in rate schedules.

(a) *Automatic authorization.* The certificate holder is authorized to permit an existing customer, at the customer's request, to change from Part 157 individually certificated transportation or storage service to Part 284 transportation or storage service, and to abandon the Part 157 service, if:

(1) The combined volumetric limitations on deliveries to the customer under both rate schedules are not increased, for either annual or peak day limitations;

(2) The conversion will reflect all the maximum rates and charges associated with the service;

(3) The changes are consistent with the terms of the effective tariffs on file with the Commission. The certificate holder is granted a limited waiver of its tariff requiring posting of available capacity.

* * * * *

(b) * * *

(2) The rate schedules and associated rates involved; and

* * * * *

40. In § 157.218, paragraph (a) is revised to read as follows:

§ 157.218 Changes in customer name.

(a) *Automatic authorization.* The effective certificates of the certificate holder may be amended to the extent necessary to reflect the change in the name of an existing customer, if the certificate holder has filed any necessary conforming changes in its Index of Customers, including the customer's old name.

* * * * *

41. In Appendix I to Subpart F of Part 157, in the reference to ''§ 157.206(d)(3)(i)'' in the heading and the references to § 157.206(d)'' and ''§ 157.206(d)(7)'' in the introductory text, the (d) is removed and a (b) is added in its place; the references to ''§ 157.206(d)(2)(vii)'' in paragraphs 2, 3 is removed and ''§ 157.206(b)(2)(vi)'' is added in its place, and paragraph 4(b) is revised to read as follows:

Appendix I to Subpart F of Part 157—Procedures for Compliance With the Endangered Species Act OF 1973 Under § 157.206(b)(3)(i)

* * * * *

(4) * * *

(b) The certificate holder shall be deemed in compliance with § 157.206(b)(2)(vi) of the Commission's regulations if the consulted agency agrees with the certificate holder's determination resulting from the continued informal consultations, that the proposed project is not likely to adversely affect a listed species or critical habitat, or that no further consultation is necessary.

* * * * *

42. Appendix II to Subpart F of Part 157 is revised to read as follows:

Appendix II to Subpart F—Procedures for Compliance With the National Historic Preservation Act of 1966 Under § 157.206(b)(3)(ii)

The following procedures apply to any certificate holder which undertakes a project under the authority of a blanket certificate issued pursuant to subparts E or F of part 157 and to any other service subject to § 157.206(b) of the Federal Energy Regulatory Commission's (Commission) regulations. For the purposes of this appendix, the following definitions apply:

(a) ''Listed property'' means any district, site, building, structure or object which is listed (1) on the National Register of Historic Places, or (2) in the **Federal Register** as a property determined to be eligible for inclusion on the National Register.

(b) ''SHPO'' means the State Historic Preservation Officer or any alternative person duly designated, in accordance with section (1)(b) of Appendix II to Subpart F, to advise on cultural resource matters.

(c) ''Unlisted property'' means any district, site, building, structure or object which is not a listed property.

(d) ''THPO'' means the Tribal Historic Preservation Officer.

The certificate holder shall be deemed to be in compliance with § 157.206(b)(2)(iii) of the Commission's regulations only if, prior to constructing facilities or abandoning facilities by removal under the blanket certificate, it complies with the following procedures:

(1)(a) If federally administered land would be directly affected by the project, then the procedures used by the appropriate Tribal or Federal land managing agency to comply with section 106 of the National Historic Preservation Act of 1966, 16 U.S.C. 470f, shall take precedence over these procedures. The procedures in this appendix apply to State and private lands, and Federal lands for which there are no other Federal procedures.

(b) If there is no SHPO, or THPO, if appropriate, or if the SHPO, or THPO, as appropriate, declines to consult with the certificate holder, the certificate holder shall so inform the environmental staff of the Office of Pipeline Regulation and shall not proceed with these procedures or the project until an alternate consultant has been duly designated.

(2) It shall be the certificate holder's responsibility to identify or cause to be identified listed properties and unlisted properties that satisfy the National Register Criteria for Evaluation (36 CFR 1202.6), that are located within the area of the project's potential environmental impact and that may be affected by the undertaking.

(3) The certificate holder shall:

(a) Check the National Register of Historic Places and consult with the SHPO, or THPO, as appropriate, to identify all listed properties within the area of the project's potential environmental impact;

(b) Consult with the SHPO, or THPO, as appropriate, and to the extent deemed appropriate by the SHPO, or THPO, as appropriate, check public records and consult with other individuals and organizations with historical and cultural expertise, to determine whether unlisted properties that satisfy the National Register Criteria for Evaluation are known or likely to occur within the area of the project's potential environmental impact; and

(c) Consult with the SHPO, or THPO, as appropriate, to determine the need for surveys to identify unknown unlisted properties. The certificate holder shall evaluate the eligibility of any known unlisted properties located within the area of the project's potential environmental impact according to the National Register Criteria for Evaluation.

(4) The certificate holder shall be deemed in compliance with § 157.206(b)(2)(iii) of the Commission's regulations if the SHPO, or THPO, as appropriate, agrees with the certificate holder that no survey is required, and that no listed properties or unlisted properties that satisfy the National Register Criteria for Evaluation occur in the area of the project's potential environmental impact.

(5) If the SHPO, or THPO, as appropriate, determines that surveys are required to ensure that no listed properties, or unlisted properties that satisfy the National Register Criteria for Evaluation, occur within the area of the project's potential environmental impact, the certificate holder shall perform surveys deemed by the SHPO, or THPO, as appropriate, to be of sufficient scope and intensity to identify and evaluate such properties. The certificate holder shall submit the results of the surveys including a statement as to which unlisted properties satisfy the National Register Criteria for Evaluation, to the SHPO and solicit comments on the surveys and the conclusions.

(6) The certificate holder shall be deemed in compliance with § 157.206(b)(2)(iii) of the Commission's regulations if, upon conclusion of the surveys, the certificate holder and the SHPO, or THPO, as appropriate, agree that no listed properties, and no unlisted properties which satisfy the National Register Criteria for Evaluation, occur in the area of the project's potential environmental impact.

(7) For each listed property, and each unlisted property which satisfies the National Register Criteria for Evaluation, which is located within the area of the project's potential environmental impact, the certificate holder, in consultation with the SHPO, shall apply the Criteria of Effect (36 CFR 800.5) to determine whether the project will have an effect upon the historical, architectural, archeological, or cultural characteristics of the property that qualified it to meet National Register Criteria for Evaluation. The certificate holder shall be deemed in compliance with § 157.206(b)(2)(iii) of the Commission's regulations if the certificate holder and the SHPO agree that the project will not affect these characteristics.

(8) If either the certificate holder or the SHPO, or THPO, as appropriate, finds that the project may affect a listed property or an unlisted property which satisfies the National Register Criteria for Evaluation, located within the area of the project's potential environmental impact, then the project shall not be authorized under the blanket certificate unless such properties can be avoided by relocation of the project to an area where the SHPO, or THPO, as appropriate, agrees that no listed properties or unlisted properties that satisfy the National Register Criteria for Evaluation occur. The certificate holder shall be deemed in compliance with § 157.206(b)(2)(iii) of the Commission's regulations if the project is relocated as described above.

(9) If the certificate holder and the SHPO, or THPO, as appropriate, are unable to agree upon the need for a survey, the adequacy of a survey, or the results of application of the National Register Criteria for Evaluation to an unlisted property, the project shall not be authorized under the blanket certificate.

PART 284—CERTAIN SALES AND TRANSPORTATION OF NATURAL GAS UNDER THE NATURAL GAS ACT, THE NATURAL GAS POLICY ACT OF 1978 AND RELATED AUTHORITIES.

43. The authority citation for part 284 continues to read as follows:

Authority: 15 U.S.C. 717–717w, 3301–3432; 42 U.S.C. 7101–7352; 43 U.S.C. 1331–1356.

44. In § 284.221, paragraph (d)(1) is amended to remove the ''s'' from the word ''paragraphs'' and to remove the phrase ''and (d)(3)''; paragraph (d)(3) is removed; the word ''replacement,'' is added to paragraph (f)(3) after the word ''operation''; paragraph (f)(4) is revised; and the phrase ''and § 157.212'' is removed from paragraph (h)(3) to read as follows:

§ 284.221 General rule; transportation by interstate pipeline on behalf of others.

* * * * *

(f) * * *

(4) Authorization for delivery points is subject to the automatic authorization under § 157.211(a)(1) and the prior notice procedures under § 157.211(a)(2) and § 157.205.

* * * * *

45. Section 284.262 is revised to read as follows:

§ 284.262 Definitions.

For purposes of this subpart:

Emergency means:

(1) Any situation in which an actual or expected shortage of gas supply or capacity would require an interstate pipeline company, intrastate pipeline, local distribution company, or Hinshaw pipeline to curtail deliveries of gas or provide less than the projected level of service to any pipeline customer, including any situation in which additional supplies or capacity are necessary to ensure a pipeline's contracted level of service to any customer, but not including any situation in which additional supplies or capacity are needed to increase the contracted level of service to an existing

customer or to provide service to a new customer; or

(2) A sudden unanticipated loss of natural gas supply or capacity; or

(3) An anticipated loss of natural gas supply or capacity due to a foreseeable facility outage resulting from a landslide or riverbed erosion or other natural forces beyond the participant's control. Participants may seek a temporary certificate under §§ 157.17 of this chapter if the facilities to remedy the emergency cannot be constructed automatically under § 2.55(b) or § 157.208(a) of this chapter.

(4) A situation in which the participant, in good faith, determines that immediate action is required or is reasonably anticipated to be required for protection of life or health or for maintenance of physical property.

Emergency does not mean any situation resulting from a failure by any person to transport natural gas under subpart B, C, or G of this part.

Projected level of service means the level of gas volumes to be delivered by the company for each customer and additional gas volumes needed by a customer due solely to a weather-induced increase in requirements.

Emergency natural gas means natural gas sold, transported, or exchanged in an emergency natural gas transaction.

Emergency natural gas transaction means the sale, transportation, or exchange of natural gas (including the construction and operation of necessary facilities) conducted pursuant to this subpart, that is:

(1) Necessary to alleviate an emergency; and

(2) Not anticipated to extend for more than 60 days in duration.

Emergency facilities means any facilities necessary to alleviate the emergency within the time frame established in § 284.264(b). Participants can seek permanent authority to operate the emergency facilities either under the temporary certificate provisions of § 157.17 of this chapter or the prior notice provisions of § 157.208(b) of this chapter.

Participant means any first seller, interstate pipeline, intrastate pipeline, local distribution company or Hinshaw pipeline that participates in an emergency natural gas transaction under this subpart.

Recipient means:

(1) In the case of a sale of emergency natural gas, the purchaser of such gas; or

(2) In the case of a transportation or exchange of natural gas when there is no sale of emergency natural gas under this subpart, the participant who receives the gas.

Hinshaw pipeline means a pipeline that is exempt from the Natural Gas Act jurisdiction of the Commission by reason of section 1(c) of the Natural Gas Act.

§ 284.288 [Removed]

46. Section 284.288 is removed and reserved.

PART 375—THE COMMISSION

47. The authority citation for Part 375 continues to read as follows:

Authority: 5 U.S.C. 551–557; 15 U.S.C. 717–717w, 3301–3432; 16 U.S.C. 791–825r, 2601–2645; 42 U.S.C. 7101–7352.

48. In § 375.307, paragraph (a)(1) is revised; paragraph (a)(2) is removed; paragraphs (a)(3)–(5) are redesignated as paragraphs (a)(2)–(4) and are revised; paragraphs (a)(6) and (a)(7) are redesignated as (a)(5) and (6); paragraphs (a)(8) and (a)(9) are removed; paragraph (a)(10)–(12) are redesignated as (a)(7)–(9); new paragraph (a)(10) is added; paragraphs (a)(14)–(16) are redesignated as (a)(11)–(13), and paragraphs(a)(17) and (a)(18) are removed; paragraphs (b)(4) and (5) and (c) are removed; paragraph (d) is redesignated as (c); paragraphs (e)(3) and (7) are removed; paragraphs (e)(4)–(6) are redesignated as (e)(3)–(5); paragraphs (e)–(g) are redesignated as (d)–(f); and redesignated paragraph (e)(3) is revised all to read as follows:

§ 375.307 Delegations to the Director of the Office of Pipeline Regulation.

* * * * *

(a) * * *

(1) Applications or amendments requesting authorization for the construction or acquisition and operation of facilities that have a construction or acquisition cost less than the limits specified in Column 2 of Table I in § 157.208(d) of this chapter;

(2) Applications by a pipeline for the abandonment of pipeline facilities or for the deletion of delivery points;

(3) Applications to abandon pipeline facilities or services involving a specific customer or customers, if such customer or customers have agreed to the abandonment;

(4) Applications for temporary or permanent certificates (and for amendments thereto) for the transportation, exchange, or storage of natural gas, provided that the cost of construction of the certificate applicant's related facility is less than the limits specified in Column 2 of Table I in § 157.208(d) of this chapter.

* * * * *

(10) Dismiss any protest to prior notice filings made pursuant to § 157.205 of this chapter that does not raise a substantive issue and fails to provide any specific detailed reason or rationale for the objection;

* * * * *

(e) * * *

(3) Fees prescribed in §§ 381.207 and 381.403 of this chapter in accordance with §§ 381.106(b) of this chapter;

PART 380–REGULATIONS IMPLEMENTING THE NATIONAL ENVIRONMENTAL POLICY ACT

49. The authority citation for Part 380 continues to read as follows:

Authority: National Environmental Policy Act of 1969, 42 U.S.C. 4321–4370a; Department of Energy Organization Act, 42 U.S.C. 7101–7352; E.O. 12009, 3 CFR 1978 Comp., p. 142.

§ 380.3 [Amended]

50. Section 380.3(c)(2) is amended to add the words ''§ 380.12 and'' after the words ''information identified in''.

§ 380.4 [Amended]

51. In § 380.4(a)(28) remove the word ''tops'' and add the word ''taps'' in its place.

52. New § 380.12, is added to read as follows:

§ 380.12 Environmental Reports for Natural Gas Act Applications.

(a) *Introduction.* (1) The applicant must submit an environmental report with any application that proposes the construction, operation, or abandonment of any facility identified in § 380.3(c)(2)(i). The environmental report shall consist of the thirteen resource reports and related material described in this section.

(2) The detail of each resource report must be commensurate with the complexity of the proposal and its potential for environmental impact. Each topic in each resource report shall be addressed or its omission justified, unless the resource report description indicates that the data is not required for that type of proposal. If material required for one resource report is provided in another resource report or in another exhibit, it may be incorporated by reference. If any resource report topic is required for a particular project but is not provided at the time the application is filed, the environmental report shall explain why it is missing and when the applicant anticipates it will be filed.

(3) The appendix to this part contains a checklist of the minimum filing requirements for an environmental report. Failure to provide at least the applicable checklist items will result in rejection of the application unless the

Director of OPR determines that the applicant has provided an acceptable reason for the item's absence and an acceptable schedule for filing it. Failure to file within the accepted schedule will result in rejection of the application.

(b) *General requirements.* As appropriate, each resource report shall:

(1) Address conditions or resources that might be directly or indirectly affected by the project.

(2) Identify significant environmental effects expected to occur as a result of the project;

(3) Identify the effects of construction, operation (including maintenance and malfunctions), and termination of the project, as well as cumulative effects resulting from existing or reasonably foreseeable projects;

(4) Identify measures proposed to enhance the environment or to avoid, mitigate, or compensate for adverse effects of the project;

(5) Provide a list of publications, reports, and other literature or communications, including agency contacts, that were cited or relied upon to prepare each report. This list should include the name and title of the person contacted, their affiliations, and telephone number.

(6) Whenever this section refers to ''mileposts'' the applicant may substitute ''survey centerline stationing'' if so desired. However, whatever method is chosen should be used consistently throughout the resource reports.

(c) *Resource Report 1—General project description.* This report is required for all applications. It will describe facilities associated with the project, special construction and operation procedures, construction timetables, future plans for related construction, compliance with regulations and codes, and permits that must be obtained. Resource Report 1 must:

(1) Describe and provide location maps of all jurisdictional facilities, including all aboveground facilities associated with the project (such as: meter stations, pig launchers/receivers, valves), to be constructed, modified, abandoned, replaced, or removed, including related construction and operational support activities and areas such as maintenance bases, staging areas, communications towers, power lines, and new access roads (roads to be built or modified). As relevant, the report must describe the length and diameter of the pipeline, the types of aboveground facilities that would be installed, and associated land requirements. It must also identify other companies that must construct jurisdictional facilities related to the project, where the facilities would be located, and where they are in the Commission's approval process.

(2) Identify and describe all nonjurisdictional facilities, including auxiliary facilities, that will be built in association with the project, including facilities to be built by other companies.

(i) Provide the following information:

(A) A brief description of each facility, including as appropriate: Ownership, land requirements, gas consumption, megawatt size, construction status, and an update of the latest status of Federal, state, and local permits/approvals;

(B) The length and diameter of any interconnecting pipeline;

(C) Current 1:24,000/1:25,000 scale topographic maps showing the location of the facilities;

(D) Correspondence with the appropriate State Historic Preservation Officer (SHPO) or duly authorized Tribal Historic Preservation Officer (THPO) for tribal lands regarding whether properties eligible for listing on the National Register of Historic Places (NRHP) would be affected;

(E) Correspondence with the U.S. Fish and Wildlife Service (and National Marine Fisheries Service, if appropriate) regarding potential impacts of the proposed facility on federally listed threatened and endangered species; and

(F) For facilities within a designated coastal zone management area, a consistency determination or evidence that the owner has requested a consistency determination from the state's coastal zone management program.

(ii) Address each of the following factors and indicate which ones, if any, appear to indicate the need for the Commission to do an environmental review of project-related nonjurisdictional facilities.

(A) Whether or not the regulated activity comprises ''merely a link'' in a corridor type project (e.g., a transportation or utility transmission project).

(B) Whether there are aspects of the nonjurisdictional facility in the immediate vicinity of the regulated activity which uniquely determine the location and configuration of the regulated activity.

(C) The extent to which the entire project will be within the Commission's jurisdiction.

(D) The extent of cumulative Federal control and responsibility.

(3) Provide the following maps and photos:

(i) Current, original United States Geological Survey (USGS) 7.5-minute series topographic maps or maps of equivalent detail, covering at least a 0.5-mile-wide corridor centered on the pipeline, with integer mileposts identified, showing the location of rights-of-way, new access roads, other linear construction areas, compressor stations, and pipe storage areas. Show nonlinear construction areas on maps at a scale of 1:3,600 or larger keyed graphically and by milepost to the right-of-way maps.

(ii) Original aerial images or photographs or photo-based alignment sheets based on these sources, not more than 1 year old (unless older ones accurately depict current land use and development) and with a scale of 1:6,000 or larger, showing the proposed pipeline route and location of major aboveground facilities, covering at least a 0.5 mile-wide corridor, and including mileposts. Older images/photographs/alignment sheets should be modified to show any residences not depicted in the original. Alternative formats (e.g., blue-line prints of acceptable resolution) need prior approval by the environmental staff of the Office of Pipeline Regulation.

(iii) In addition to the copy required under § 157.6(a)(2) of this chapter, applicant should send two additional copies of topographic maps and aerial images/photographs directly to the environmental staff of the Office of Pipeline Regulation.

(4) When new or additional compression is proposed, include large scale (1:3,600 or greater) plot plans of each compressor station. The plot plan should reference a readily identifiable point(s) on the USGS maps required in paragraph (c)(3) of this section. The maps and plot plans must identify the location of the nearest noise-sensitive areas (schools, hospitals, or residences) within 1 mile of the compressor station, existing and proposed compressor and auxiliary buildings, access roads, and the limits of areas that would be permanently disturbed.

(5) Identify aboveground facilities to be abandoned, how they would be abandoned, and how the site would be restored.

(6) Describe and identify by milepost, proposed construction and restoration methods to be used in areas of rugged topography, residential areas, active croplands, sites where the pipeline would be located parallel to and under roads, and sites where explosives are likely to be used.

(7) Unless provided in response to Resource Report 5, describe estimated workforce requirements, including the number of pipeline construction spreads, average workforce

requirements for each construction spread and meter or compressor station, estimated duration of construction from initial clearing to final restoration, and number of personnel to be hired to operate the proposed project.

(8) Describe reasonably foreseeable plans for future expansion of facilities, including additional land requirements and the compatibility of those plans with the current proposal.

(9) Describe all authorizations required to complete the proposed action and the status of applications for such authorizations. Identify environmental mitigation requirements specified in any permit or proposed in any permit application to the extent not specified elsewhere in this section.

(10) Provide the names and addresses of all landowners whose land would be crossed by the project facilities. Include the names and addresses of all residents adjacent to new or modified compressor stations.

(d) *Resource Report 2—Water use and quality.* This report is required for all applications, except those which involve only facilities within the areas of an existing compressor, meter, or regulator station that were disturbed by construction of the existing facilities, no wetlands or waterbodies are on the site and there would not be a significant increase in water use. The report must describe water quality and provide data sufficient to determine the expected impact of the project and the effectiveness of mitigative, enhancement, or protective measures. Resource Report 2 must:

(1) Identify and describe by milepost perennial waterbodies and municipal water supply or watershed areas, specially designated surface water protection areas and sensitive waterbodies, and wetlands that would be crossed. For each waterbody crossing, identify the approximate width, state water quality classifications, any known potential pollutants present in the water or sediments, and any potable water intake sources within 3 miles downstream.

(2) Compare proposed mitigation measures with the staff's current ''*Wetland and Waterbody Construction and Mitigation Procedures*,'' which are available from the Commission Internet home page or the Commission staff, describe what proposed alternative mitigation would provide equivalent or greater protection to the environment, and provide a description of site-specific construction techniques that would be used at each major waterbody crossing.

(3) Describe typical staging area requirements at waterbody and wetland crossings. Also, identify and describe waterbodies and wetlands where staging areas are likely to be more extensive.

(4) Include National Wetland Inventory (NWI) maps. If NWI maps are not available, provide the appropriate state wetland maps. Identify for each crossing, the milepost, the wetland classification specified by the U.S. Fish and Wildlife Service, and the length of the crossing. Include two copies of the NWI maps (or the substitutes, if NWI maps are not available) clearly showing the proposed route and mileposts directed to the environmental staff. Describe by milepost, wetland crossings as determined by field delineations using the current Federal methodology.

(5) Identify aquifers within excavation depth in the project area, including the depth of the aquifer, current and projected use, water quality and average yield, and known or suspected contamination problems.

(6) Describe specific locations, the quantity required, and the method and rate of withdrawal and discharge of hydrostatic test water. Describe suspended or dissolved material likely to be present in the water as a result of contact with the pipeline, particularly if an existing pipeline is being retested. Describe chemical or physical treatment of the pipeline or hydrostatic test water. Discuss waste products generated and disposal methods.

(7) If underground storage of natural gas is proposed:

(i) Identify how water produced from the storage field will be disposed of, and

(ii) For salt caverns, identify the source locations, the quantity required, and the method and rate of withdrawal of water for creating salt cavern(s), as well as the means of disposal of brine resulting from cavern leaching.

(8) Discuss proposed mitigation measures to reduce the potential for adverse impacts to surface water, wetlands, or groundwater quality to the extent they are not described in response to paragraph (d)(2) of this section. Discuss the potential for blasting to affect water wells, springs, and wetlands, and measures to be taken to detect and remedy such effects.

(9) Identify the location of known public and private groundwater supply wells or springs within 150 feet of proposed construction areas. Identify locations of EPA or state-designated sole-source aquifers and wellhead protection areas crossed by the proposed pipeline facilities.

(e) *Resource Report 3—Fish, wildlife, and vegetation.* This report is required for all applications, except those involving only facilities within the improved area of an existing compressor, meter, or regulator station. It must describe aquatic life, wildlife, and vegetation in the vicinity of the proposed project; expected impacts on these resources including potential effects on biodiversity; and proposed mitigation, enhancement or protection measures. Resource Report 3 must:

(1) Describe commercial and recreational warmwater, coldwater, and saltwater fisheries in the affected area and associated significant habitats such as spawning or rearing areas and estuaries.

(2) Describe terrestrial habitats, including wetlands, typical wildlife habitats, and rare, unique, or otherwise significant habitats that might be affected by the proposed action. Describe typical species that have commercial, recreational, or aesthetic value.

(3) Describe and provide the affected acreage of vegetation cover types that would be affected, including unique ecosystems or communities such as remnant prairie or old-growth forest, or significant individual plants, such as old-growth specimen trees.

(4) Describe the impact of construction and operation on aquatic and terrestrial species and their habitats, including the possibility of a major alteration to ecosystems or biodiversity, and any potential impact on state-listed endangered or threatened species. Describe the impact of maintenance, clearing and treatment of the project area on fish, wildlife, and vegetation. Surveys may be required to determine specific areas of significant habitats or communities of species of special concern to state or local agencies.

(5) Identify all federally listed or proposed endangered or threatened species and critical habitat that potentially occur in the vicinity of the project. Discuss the results of the consultation requirements listed in § 380.13(b) at least through § 380.13(b)(5)(i) and include any written correspondence that resulted from the consultation. The initial application must include the results of any required surveys unless seasonal considerations make this impractical. If species surveys are impractical, there must be field surveys to determine the presence of suitable habitat unless the entire project area is suitable habitat.

(6) Describe site-specific mitigation measures to minimize impacts on fisheries, wildlife, and vegetation.

(7) Include copies of correspondence not provided pursuant to paragraph (e)(5) of this section, containing recommendations from appropriate Federal and state fish and wildlife agencies to avoid or limit impact on

wildlife, fisheries, and vegetation, and the applicant's response to the recommendations.

(f) *Resource Report 4—Cultural resources.* This report is required for all applications. In order to prepare this report, the applicant must follow the principles in § 380.14 of this part. Guidance on the content and the format for the documentation listed below, as well as professional qualifications of preparers, is detailed in ''*OPR's Guidelines for Reporting on Cultural Resources Investigations*,'' which is available from the Commission Internet home page or from the Commission staff.

(1) Resource Report 4 must contain:

(i) Documentation of the applicant's initial cultural resources consultation, including consultations with Native Americans and other interested persons (if appropriate);

(ii) Overview and Survey Reports, as appropriate;

(iii) Evaluation Report, as appropriate;

(iv) Treatment Plan, as appropriate; and

(v) Written comments from State Historic Preservation Officer(s) (SHPO), Tribal Historic Preservation Officers (THPO), as appropriate, and applicable land-managing agencies on the reports in paragraphs (f)(1)(i)–(iv) of this section.

(2) The initial application must include the Documentation of initial cultural resource consultation, the Overview and Survey Reports, if required, and written comments from SHPOs, THPOs and land-managing agencies, if available. The initial cultural resources consultations should establish the need for surveys. If deemed necessary, the survey report must be filed with the application.

(i) If the comments of the SHPOs, THPOs, or land-management agencies are not available at the time the application is filed, they may be filed separately, but they must be filed before a final certificate is issued.

(ii) If landowners deny access to private property and certain areas are not surveyed, the unsurveyed area must be identified by mileposts, and supplemental surveys or evaluations shall be conducted after access is granted. In such circumstances, reports, and treatment plans, if necessary, for those inaccessible lands may be filed after a certificate is issued.

(3) The Evaluation Report and Treatment Plan, if required, for the entire project must be filed before a final certificate is issued.

(i) The Evaluation Report may be combined in a single synthetic report with the Overview and Survey Reports if the SHPOs, THPOs, and land-management agencies allow and if it is available at the time the application is filed.

(ii) In preparing the Treatment Plan, the applicant must consult with the Commission staff, the SHPO, and any applicable THPO and land-management agencies.

(iii) Authorization to implement the Treatment Plan will occur only after the final certificate is issued.

(4) Applicant must request privileged treatment for all material filed with the Commission containing location, character, and ownership information about cultural resources in accordance with § 388.112 of this chapter. The cover and relevant pages or portions of the report should be clearly labeled in bold lettering: ''CONTAINS PRIVILEGED INFORMATION—DO NOT RELEASE.''

(5) Except as specified in a final Commission order, or by the Director of the Office of Pipeline Regulation, construction may not begin until all cultural resource reports and plans have been approved.

(g) *Resource Report 5—Socioeconomics.* This report is required only for applications involving significant aboveground facilities, including, among others, conditioning or liquefied natural gas (LNG) plants. It must identify and quantify the impacts of constructing and operating the proposed project on factors affecting towns and counties in the vicinity of the project. Resource Report 5 must:

(1) Describe the socioeconomic impact area.

(2) Evaluate the impact of any substantial immigration of people on governmental facilities and services and plans to reduce the impact on the local infrastructure.

(3) Describe on-site manpower requirements and payroll during construction and operation, including the number of construction personnel who currently reside within the impact area, would commute daily to the site from outside the impact area, or would relocate temporarily within the impact area.

(4) Determine whether existing housing within the impact area is sufficient to meet the needs of the additional population.

(5) Describe the number and types of residences and businesses that would be displaced by the project, procedures to be used to acquire these properties, and types and amounts of relocation assistance payments.

(6) Conduct a fiscal impact analysis evaluating incremental local government expenditures in relation to incremental local government revenues that would result from construction of the project. Incremental expenditures include, but are not limited to, school operating costs, road maintenance and repair, public safety, and public utility costs.

(h) *Resource Report 6—Geological resources.* This report is required for applications involving LNG facilities and all other applications, except those involving only facilities within the boundaries of existing aboveground facilities, such as a compressor, meter, or regulator station. It must describe geological resources and hazards in the project area that might be directly or indirectly affected by the proposed action or that could place the proposed facilities at risk, the potential effects of those hazards on the facility, and methods proposed to reduce the effects or risks. Resource Report 6 must:

(1) Describe, by milepost, mineral resources that are currently or potentially exploitable;

(2) Describe, by milepost, existing and potential geological hazards and areas of nonroutine geotechnical concern, such as high seismicity areas, active faults, and areas susceptible to soil liquefaction; planned, active, and abandoned mines; karst terrain; and areas of potential ground failure, such as subsidence, slumping, and landsliding. Discuss the hazards posed to the facility from each one.

(3) Describe how the project would be located or designed to avoid or minimize adverse effects to the resources or risk to itself, including geotechnical investigations and monitoring that would be conducted before, during, and after construction. Discuss also the potential for blasting to affect structures, and the measures to be taken to remedy such effects.

(4) Specify methods to be used to prevent project-induced contamination from surface mines or from mine tailings along the right-of-way and whether the project would hinder mine reclamation or expansion efforts.

(5) If the application involves an LNG facility located in zones 2, 3, or 4 of the Uniform Building Code's Seismic Risk Map, or where there is potential for surface faulting or liquefaction, prepare a report on earthquake hazards and engineering in conformance with ''*Data Requirements for the Seismic Review of LNG Facilities*,'' NBSIR 84–2833. This document may be obtained from the Commission staff.

(6) If the application is for underground storage facilities:

(i) Describe how the applicant would control and monitor the drilling activity

of others within the field and buffer zone;

(ii) Describe how the applicant would monitor potential effects of the operation of adjacent storage or production facilities on the proposed facility, and vice versa;

(iii) Describe measures taken to locate and determine the condition of old wells within the field and buffer zone and how the applicant would reduce risk from failure of known and undiscovered wells; and

(iv) Identify and discuss safety and environmental safeguards required by state and Federal drilling regulations.

(i) *Resource Report 7—Soils.* This report is required for all applications except those not involving soil disturbance. It must describe the soils that would be affected by the proposed project, the effect on those soils, and measures proposed to minimize or avoid impact. Resource Report 7 must:

(1) List, by milepost, the soil associations that would be crossed and describe the erosion potential, fertility, and drainage characteristics of each association.

(2) If an aboveground facility site is greater than 5 acres:

(i) List the soil series within the property and the percentage of the property comprised of each series;

(ii) List the percentage of each series which would be permanently disturbed;

(iii) Describe the characteristics of each soil series; and

(iv) Indicate which are classified as prime or unique farmland by the U.S. Department of Agriculture, Natural Resources Conservation Service.

(3) Identify, by milepost, potential impact from: Soil erosion due to water, wind, or loss of vegetation; soil compaction and damage to soil structure resulting from movement of construction vehicles; wet soils and soils with poor drainage that are especially prone to structural damage; damage to drainage tile systems due to movement of construction vehicles and trenching activities; and interference with the operation of agricultural equipment due to the probability of large stones or blasted rock occurring on or near the surface as a result of construction.

(4) Identify, by milepost, cropland and residential areas where loss of soil fertility due to trenching and backfilling could occur.

(5) Describe proposed mitigation measures to reduce the potential for adverse impact to soils or agricultural productivity. Compare proposed mitigation measures with the staff's current ''*Upland Erosion Control, Revegetation and Maintenance Plan*'', which is available from the Commission Internet home page or from the Commission staff, and explain how proposed mitigation measures provide equivalent or greater protections to the environment.

(j) *Resource Report 8— Land use, recreation and aesthetics.* This report is required for all applications except those involving only facilities which are of comparable use at existing compressor, meter, and regulator stations. It must describe the existing uses of land on, and (where specified) within 0.25 mile of, the proposed project and changes to those land uses that would occur if the project is approved. The report shall discuss proposed mitigation measures, including protection and enhancement of existing land use. Resource Report 8 must:

(1) Describe the width and acreage requirements of all construction and permanent rights-of-way and the acreage required for each proposed plant and operational site, including injection or withdrawal wells.

(i) List, by milepost, locations where the proposed right-of-way would be adjacent to existing rights-of-way of any kind.

(ii) Identify, preferably by diagrams, existing rights-of-way that would be used for a portion of the construction or operational right-of-way, the overlap and how much additional width would be required.

(iii) Identify the total amount of land to be purchased or leased for each aboveground facility, the amount of land that would be disturbed for construction and operation of the facility, and the use of the remaining land not required for project operation.

(iv) Identify the size of typical staging areas and expanded work areas, such as those at railroad, road, and waterbody crossings, and the size and location of all pipe storage yards and access roads.

(2) Identify, by milepost, the existing use of lands crossed by the proposed pipeline, or on or adjacent to each proposed plant and operational site.

(3) Describe planned development on land crossed or within 0.25 mile of proposed facilities, the time frame (if available) for such development, and proposed coordination to minimize impacts on land use. Planned development means development which is included in a master plan or is on file with the local planning board or the county.

(4) Identify, by milepost and length of crossing, the area of direct effect of each proposed facility and operational site on sugar maple stands, orchards and nurseries, landfills, operating mines, hazardous waste sites, state wild and scenic rivers, state or local designated trails, nature preserves, game management areas, remnant prairie, old-growth forest, national or state forests, parks, golf courses, designated natural, recreational or scenic areas, or registered natural landmarks, Native American religious sites and traditional cultural properties to the extent they are known to the public at large, and reservations, lands identified under the Special Area Management Plan of the Office of Coastal Zone Management, National Oceanic and Atmospheric Administration, and lands owned or controlled by Federal or state agencies or private preservation groups. Also identify if any of those areas are located within 0.25 mile of any proposed facility.

(5) Identify, by milepost, all residences and buildings within 50 feet of the proposed pipeline construction right-of-way and the distance of the residence or building from the right-of-way. Provide survey drawings or alignment sheets to illustrate the location of the facilities in relation to the buildings.

(6) Describe any areas crossed by or within 0.25 mile of the proposed pipeline or plant and operational sites which are included in, or are designated for study for inclusion in: The National Wild and Scenic Rivers System (16 U.S.C. 1271); The National Trails System (16 U.S.C. 1241); or a wilderness area designated under the Wilderness Act (16 U.S.C. 1132).

(7) For facilities within a designated coastal zone management area, provide a consistency determination or evidence that the applicant has requested a consistency determination from the state's coastal zone management program.

(8) Describe the impact the project will have on present uses of the affected area as identified above, including commercial uses, mineral resources, recreational areas, public health and safety, and the aesthetic value of the land and its features. Describe any temporary or permanent restrictions on land use resulting from the project.

(9) Describe mitigation measures intended for all special use areas identified under paragraphs (j)(2) through (6) of this section.

(10) Describe proposed typical mitigation measures for each residence that is within 50 feet of the edge of the pipeline construction right-of-way, as well as any proposed residence-specific mitigation. Describe how residential property, including for example, fences, driveways, stone walls, sidewalks, water supply, and septic systems, would be

restored. Describe compensation plans for temporary and permanent rights-of-way and the eminent domain process for the affected areas.

(11) Describe measures proposed to mitigate the aesthetic impact of the facilities especially for aboveground facilities such as compressor or meter stations.

(12) Demonstrate that applications for rights-of-way or other proposed land use have been or soon will be filed with Federal land-management agencies with jurisdiction over land that would be affected by the project.

(k) *Resource Report 9—Air and noise quality.* This report is required for applications involving compressor facilities at new or existing stations, and for all new LNG facilities. It must identify the effects of the project on the existing air quality and noise environment and describe proposed measures to mitigate the effects. Resource Report 9 must:

(1) Describe the existing air quality, including background levels of nitrogen dioxide and other criteria pollutants which may be emitted above EPA-identified significance levels.

(2) Quantitatively describe existing noise levels at noise-sensitive areas, such as schools, hospitals, or residences and include any areas covered by relevant state or local noise ordinances.

(i) Report existing noise levels as the L_{eq} (day), L_{eq} (night), and L_{dn} and include the basis for the data or estimates.

(ii) For existing compressor stations, include the results of a sound level survey at the site property line and nearby noise-sensitive areas while the compressors are operated at full load.

(iii) For proposed new compressor station sites, measure or estimate the existing ambient sound environment based on current land uses and activities.

(iv) Include a plot plan that identifies the locations and duration of noise measurements, the time of day, weather conditions, wind speed and direction, engine load, and other noise sources present during each measurement.

(3) Estimate the impact of the project on air quality, including how existing regulatory standards would be met.

(i) Provide the emission rate of nitrogen oxides from existing and proposed facilities, expressed in pounds per hour and tons per year for maximum operating conditions, include supporting calculations, emission factors, fuel consumption rates, and annual hours of operation.

(ii) For major sources of air emissions (as defined by the Environmental Protection Agency), provide copies of applications for permits to construct (and operate, if applicable) or for applicability determinations under regulations for the prevention of significant air quality deterioration and subsequent determinations.

(4) Provide a quantitative estimate of the impact of the project on noise levels at noise-sensitive areas, such as schools, hospitals, or residences.

(i) Include step-by-step supporting calculations or identify the computer program used to model the noise levels, the input and raw output data and all assumptions made when running the model, far-field sound level data for maximum facility operation, and the source of the data.

(ii) Include sound pressure levels for unmuffled engine inlets and exhausts, engine casings, and cooling equipment; dynamic insertion loss for all mufflers; sound transmission loss for all compressor building components, including walls, roof, doors, windows, and ventilation openings; sound attenuation from the station to nearby noise-sensitive areas; the manufacturer's name, the model number, the performance rating; and a description of each noise source and noise control component to be employed at the proposed compressor station.

(iii) Far-field sound level data measured from similar units in service elsewhere, when available, may be substituted for manufacturer's far-field sound level data.

(iv) If specific noise control equipment has not been chosen, include a schedule for submitting the data prior to certification.

(v) The estimate must demonstrate that the project will comply with applicable noise regulations and show how the facility will meet the following requirements:

(A) The noise attributable to any new compressor station, compression added to an existing station, or any modification, upgrade or update of an existing station, must not exceed a day-night sound level (L_{dn}) of 55 dBA at any pre-existing noise-sensitive area (such as schools, hospitals, or residences).

(B) New compressor stations or modifications of existing stations shall not result in a perceptible increase in vibration at any noise-sensitive area.

(5) Describe measures and manufacturer's specifications for equipment proposed to mitigate impact to air and noise quality, including emission control systems, installation of filters, mufflers, or insulation of piping and buildings, and orientation of equipment away from noise-sensitive areas.

(l) *Resource Report 10—Alternatives.* This report is required for all applications. It must describe alternatives to the project and compare the environmental impacts of such alternatives to those of the proposal. The discussion must demonstrate how environmental benefits and costs were weighed against economic benefits and costs, and technological and procedural constraints. The potential for each alternative to meet project deadlines and the environmental consequences of each alternative shall be discussed. Resource Report 10 must:

(1) Discuss the ''no action'' alternative and the potential for accomplishing the proposed objectives through the use of other systems and/or energy conservation. Provide an analysis of the relative environmental benefits and costs for each alternative.

(2) Describe alternative routes or locations considered for each facility during the initial screening for the project.

(i) For alternative routes considered in the initial screening for the project but eliminated, describe the environmental characteristics of each route or site, and the reasons for rejecting it. Identify the location of such alternatives on maps of sufficient scale to depict their location and relationship to the proposed action, and the relationship of the pipeline to existing rights-of-way.

(ii) For alternative routes or locations considered for more in-depth consideration, describe the environmental characteristics of each route or site and the reasons for rejecting it. Provide comparative tables showing the differences in environmental characteristics for the alternative and proposed action. The location of any alternatives in this paragraph shall be provided on maps equivalent to those required in paragraph (c)(2) of this section.

(m) *Resource Report 11—Reliability and safety.* This report is required for applications involving new or recommissioned LNG facilities. Information previously filed with the Commission need not be refiled if the applicant verifies its continued validity. This report shall address the potential hazard to the public from failure of facility components resulting from accidents or natural catastrophes, how these events would affect reliability, and what procedures and design features have been used to reduce potential hazards. Resource Report 11 must:

(1) Describe measures proposed to protect the public from failure of the proposed facilities (including coordination with local agencies).

(2) Discuss hazards, the environmental impact, and service interruptions which could reasonably

ensue from failure of the proposed facilities.

(3) Discuss design and operational measures to avoid or reduce risk.

(4) Discuss contingency plans for maintaining service or reducing downtime.

(5) Describe measures used to exclude the public from hazardous areas. Discuss measures used to minimize problems arising from malfunctions and accidents (with estimates of probability of occurrence) and identify standard procedures for protecting services and public safety during maintenance and breakdowns.

(n) *Resource Report 12—PCB Contamination.* This report is required for applications involving the replacement, abandonment by removal, or abandonment in place of pipeline facilities determined to have polychlorinated biphenyls (PCBs) in excess of 50 ppm in pipeline liquids. Resource Report 12 must:

(1) Provide a statement that activities would comply with an approved EPA disposal permit, with the dates of issuance and expiration specified, or with the requirements of the Toxic Substances Control Act.

(2) For compressor station modifications on sites that have been determined to have soils contaminated with PCBs, describe the status of remediation efforts completed to date.

(o) *Resource Report 13—Engineering and design material.* This report is required for construction of new liquefied natural gas (LNG) facilities, or the recommissioning of existing LNG facilities. If the recommissioned facility is existing and is not being replaced, relocated, or significantly altered, resubmittal of information already on file with the Commission is unnecessary. Resource Report 13 must:

(1) Provide a detailed plot plan showing the location of all major components to be installed, including compression, pretreatment, liquefaction, storage, transfer piping, vaporization, truck loading/unloading, vent stacks, pumps, and auxiliary or appurtenant service facilities.

(2) Provide a detailed layout of the fire protection system showing the location of fire water pumps, piping, hydrants, hose reels, dry chemical systems, high expansion foam systems, and auxiliary or appurtenant service facilities.

(3) Provide a layout of the hazard detection system showing the location of combustible-gas detectors, fire detectors, heat detectors, smoke or combustion product detectors, and low temperature detectors. Identify those detectors that activate automatic shutdowns and the equipment that would shut down. Include all safety provisions incorporated in the plant design, including automatic and manually activated emergency shutdown systems.

(4) Provide a detailed layout of the spill containment system showing the location of impoundments, sumps, subdikes, channels, and water removal systems.

(5) Provide manufacturer's specifications, drawings, and literature on the fail-safe shut-off valve for each loading area at a marine terminal (if applicable).

(6) Provide a detailed layout of the fuel gas system showing all taps with process components.

(7) Provide copies of company, engineering firm, or consultant studies of a conceptual nature that show the engineering planning or design approach to the construction of new facilities or plants.

(8) Provide engineering information on major process components related to the first six items above, which include (as applicable) function, capacity, type, manufacturer, drive system (horsepower, voltage), operating pressure, and temperature.

(9) Provide manuals and construction drawings for LNG storage tank(s).

(10) Provide up-to-date piping and instrumentation diagrams. Include a description of the instrumentation and control philosophy, type of instrumentation (pneumatic, electronic), use of computer technology, and control room display and operation. Also, provide an overall schematic diagram of the entire process flow system, including maps, materials, and energy balances.

(11) Provide engineering information on the plant's electrical power generation system, distribution system, emergency power system, uninterruptible power system, and battery backup system.

(12) Identify of all codes and standards under which the plant (and marine terminal, if applicable) will be designed, and any special considerations or safety provisions that were applied to the design of plant components.

(13) Provide a list of all permits or approvals from local, state, Federal, or Native American groups or Indian agencies required prior to and during construction of the plant, and the status of each, including the date filed, the date issued, and any known obstacles to approval. Include a description of data records required for submission to such agencies and transcripts of any public hearings by such agencies. Also provide copies of any correspondence relating to the actions by all, or any, of these agencies regarding all required approvals.

(14) Identify how each applicable requirement will comply with 49 CFR part 193 and the National Fire Protection Association 59A LNG Standards. For new facilities, the siting requirements of 49 CFR part 193, subpart B, must be given special attention. If applicable, vapor dispersion calculations from LNG spills over water should also be presented to ensure compliance with the U.S. Coast Guard's LNG regulations in 33 CFR part 127.

(15) Provide seismic information specified in Data Requirements for the Seismic Review of LNG facilities (NBSIR 84–2833, available from FERC staff) for facilities that would be located in zone 2, 3, or 4 of the Uniform Building Code Seismic Map of the United States.

53. New § 380.13 is added to read as follows:

§ 380.13 Compliance with the Endangered Species Act.

(a) *Definitions.* For purposes of this section:

(1) *Listed species* and *critical habitat* have the same meaning as provided in 50 CFR 402.02.

(2) *Project area* means any area subject to construction activities (for example, material storage sites, temporary work areas, and new access roads) necessary to install or abandon the facilities.

(b) *Procedures for informal consultation.*—(1) *Designation of non-Federal representative.* The project sponsor is designated as the Commission's non-Federal representative for purposes of informal consultations with the U.S. Fish and Wildlife Service (FWS) and the National Marine Fisheries Service (NMFS) under the Endangered Species Act of 1973, as amended (ESA).

(2) *Consultation requirement.* (i) Prior to the filing of the environmental report specified in § 380.12, the project sponsor must contact the appropriate regional or field office of the FWS or the NMFS, or both if appropriate, to initiate informal consultations, unless it is proceeding pursuant to a blanket clearance issued by the FWS and/or NMFS which is less than 1 year old and the clearance does not specify more frequent consultation.

(ii) If a blanket clearance is more than 1 year old or less than 1 year old and specifies more frequent consultations, or if the project sponsor is not proceeding pursuant to a blanket clearance, the project sponsor must request a list of

federally listed or proposed species and designated or proposed critical habitat that may be present in the project area, or provide the consulted agency with such a list for its concurrence.

(iii) The consulted agency will provide a species and critical habitat list or concur with the species list provided within 30 days of its receipt of the initial request. In the event that the consulted agency does not provide this information within this time period, the project sponsor may notify the Director of the Office of Pipeline Regulation and continue with the remaining procedures of this section.

(3) *End of informal consultation.* (i) At any time during the informal consultations, the consulted agency may determine or confirm:

(A) That no listed or proposed species, or designated or proposed critical habitat, occurs in the project area; or

(B) That the project is not likely to adversely affect a listed species or critical habitat;

(ii) If the consulted agency provides the determination or confirmation described in paragraph (b)(3)(i) of this section, no further consultation is required.

(4) *Potential impact to proposed species.* (i) If the consulted agency, pursuant to informal consultations, initially determines that any species proposed to be listed, or proposed critical habitat, occurs in the project area, the project sponsor must confer with the consulted agency on methods to avoid or reduce the potential impact.

(ii) The project sponsor shall include in its proposal, a discussion of any mitigating measures recommended through the consultation process.

(5) *Continued informal consultations for listed species.* (i) If the consulted agency initially determines, pursuant to the informal consultations, that a listed species or designated critical habitat may occur in the project area, the project sponsor must continue informal consultations with the consulted agency to determine if the proposed project may affect the species or designated critical habitat. These consultations may include discussions with experts (including experts provided by the consulted agency), habitat identification, field surveys, biological analyses, and the formulation of mitigation measures. If the provided information indicates that the project is not likely to adversely affect a listed species or critical habitat, the consulting agency will provide a letter of concurrence which completes informal consultation.

(ii) The project sponsor must prepare a Biological Assessment unless the consulted agency indicates that the proposed project is not likely to adversely affect a specific listed species or its designated critical habitat. The Biological Assessment must contain the following information for each species contained in the consulted agency's species list:

(A) Life history and habitat requirements;

(B) Results of detailed surveys to determine if individuals, populations, or suitable, unoccupied habitat exists in the proposed project's area of effect;

(C) Potential impacts, both beneficial and negative, that could result from the construction and operation of the proposed project, or disturbance associated with the abandonment, if applicable; and

(D) Proposed mitigation that would eliminate or minimize these potential impacts.

(iii) All surveys must be conducted by qualified biologists and must use FWS and/or NMFS approved survey methodology. In addition, the Biological Assessment must include the following information:

(A) Name(s) and qualifications of person(s) conducting the survey;

(B) Survey methodology;

(C) Date of survey(s); and

(D) Detailed and site-specific identification of size and location of all areas surveyed.

(iv) The project sponsor must provide a draft Biological Assessment directly to the environmental staff of the Office of Pipeline Regulation for review and comment and/or submission to the consulted agency. If the consulted agency fails to provide formal comments on the Biological Assessment to the project sponsor within 30 days of its receipt, as specified in 50 CFR 402.120, the project sponsor may notify the Director, OPR, and follow the procedures in paragraph (c) of this section.

(v) The consulted agency's comments on the Biological Assessment's determination must be filed with the Commission.

(c) *Notification to Director.* In the event that the consulted agency fails to respond to requests by the project sponsor under paragraph (b) of this section, the project sponsor must notify the Director of the Office of Pipeline Regulation. The notification must include all information, reports, letters, and other correspondence prepared pursuant to this section. The Director will determine whether:

(1) Additional informal consultation is required;

(2) Formal consultation must be initiated under paragraph (d) of this section; or

(3) Construction may proceed.

(d) *Procedures for formal consultation.* (1) In the event that formal consultation is required pursuant to paragraphs (b)(5)(v) or (c)(2) of this section, the Commission staff will initiate formal consultation with the FWS and/or NMFS, as appropriate, and will request that the consulted agency designate a lead Regional Office, lead Field/District Office, and Project Manager, as necessary, to facilitate the formal consultation process. In addition, the Commission will designate a contact for formal consultation purposes.

(2) During formal consultation, the consulted agency, the Commission, and the project sponsor will coordinate and consult to determine potential impacts and mitigation which can be implemented to minimize impacts. The Commission and the consulted agency will schedule coordination meetings and/or field visits as necessary.

(3) The formal consultation period will last no longer than 90 days, unless the consulted agency, the Commission, and project sponsor mutually agree to an extension of this time period.

(4) The consulted agency will provide the Commission with a Biological Opinion on the proposed project, as specified in 50 CFR 402.14(e), within 45 days of the completion of formal consultation.

54. New § 380.14 is added to read as follows:

§ 380.14 Compliance with the National Historic Preservation Act.

(a) Section 106 of the National Historic Preservation Act, as amended (16 U.S.C. 470(f)) (NHPA), requires the Commission take into account the effect of a proposed project on any historic property and to afford the Advisory Council on Historic Preservation (Council) an opportunity to comment on projects if required under 36 CFR 800. The project sponsor, as a non-Federal party, assists the Commission in meeting its obligations under NHPA section 106 and the implementing regulations at 36 CFR part 800 by following the procedures at § 380.12(f). The project sponsor may contact the Commission at any time for assistance. The Commission will review the resultant filings.

(1) The Commission's NHPA section 106 responsibilities apply to public and private lands, unless subject to the provisions of paragraph (a)(2) of this section. The project sponsor will assist the Commission in taking into account

the views of interested parties, Native Americans, and tribal leaders.

(2) If Federal or Tribal land is affected by a proposed project, the project sponsor shall adhere to any requirements for cultural resources studies of the applicable Federal land-managing agencies on Federal lands and any tribal requirements on Tribal lands. The project sponsor must identify, in Resource Report 4 filed with the application, the status of cultural resources studies on Federal or Tribal lands, as applicable.

(3) The project sponsor must consult with the SHPO(s) and THPOs, if appropriate. If the SHPO or THPO declines to consult with the project sponsor, the project sponsor shall not continue with consultations, except as instructed by the Director of the Office of Pipeline Regulation.

(4) If the project is covered by an agreement document among the Commission, Council, SHPO(s), THPO(s), land-managing agencies, project sponsors, and interested persons, as appropriate, then that agreement will provide for compliance with NHPA section 106, as applicable.

(b) [Reserved]

55. New § 380.15 is added to read as follows:

§ 380.15 Siting and maintenance requirements.

(a) *Avoidance or minimization of effects.* The siting, construction, and maintenance of facilities shall be undertaken in a way that avoids or minimizes effects on scenic, historic, wildlife, and recreational values.

(b) *Landowner consideration.* The desires of landowners should be taken into account in the planning, locating, clearing, and maintenance of rights-of-way and the construction of facilities on their property, so long as the result is consistent with applicable requirements of law, including laws relating to land-use and any requirements imposed by the Commission.

(c) *Safety regulations.* The requirements of this paragraph do not affect a project sponsor's obligation to comply with safety regulations of the U.S. Department of Transportation and recognized safe engineering practices.

(d) *Pipeline construction.*

(1) The use, widening, or extension of existing rights-of-way must be considered in locating proposed facilities.

(2) In locating proposed facilities, the project sponsor shall, to the extent practicable, avoid places listed on, or eligible for listing on, the National Register of Historic Places; natural landmarks listed on the National Register of Natural Landmarks; officially designated parks; wetlands; and scenic, recreational, and wildlife lands. If rights-of-way must be routed near or through such places, attempts should be made to minimize visibility from areas of public view and to preserve the character and existing environment of the area.

(3) Rights-of-way should avoid forested areas and steep slopes where practical.

(4) Rights-of-way clearing should be kept to the minimum width necessary.

(5) In selecting a method to clear rights-of-way, soil stability and protection of natural vegetation and adjacent resources should be taken into account.

(6) Trees and vegetation cleared from rights-of-way in areas of public view should be disposed of without undue delay.

(7) Remaining trees and shrubs should not be unnecessarily damaged.

(8) Long foreground views of cleared rights-of-way through wooded areas that are visible from areas of public view should be avoided.

(9) Where practical, rights-of-way should avoid crossing hills and other high points at their crests where the crossing is in a forested area and the resulting notch is clearly visible in the foreground from areas of public view.

(10) Screen plantings should be employed where rights-of-way enter forested areas from a clearing and where the clearing is plainly visible in the foreground from areas of public view.

(11) Temporary roads should be designed for proper drainage and built to minimize soil erosion. Upon abandonment, the road area should be restored and stabilized without undue delay.

(e) *Right-of-way maintenance.*

(1) Vegetation covers established on a right-of-way should be properly maintained.

(2) Access and service roads should be maintained with proper cover, water bars, and the proper slope to minimize soil erosion. They should be jointly used with other utilities and land-management agencies where practical.

(3) Chemical control of vegetation should not be used unless authorized by the landowner or land-managing agency. When chemicals are used for control of vegetation, they should be approved by EPA for such use and used in conformance with all applicable regulations.

(f) *Construction of aboveground facilities.*

(1) Unobtrusive sites should be selected for the location of aboveground facilities.

(2) Aboveground facilities should cover the minimum area practicable.

(3) Noise potential should be considered in locating compressor stations, or other aboveground facilities.

(4) The exterior of aboveground facilities should be harmonious with the surroundings and other buildings in the area.

(5) The site of aboveground facilities which are visible from nearby residences or public areas, should be planted in trees and shrubs, or other appropriate landscaping and should be installed to enhance the appearance of the facilities, consistent with operating needs.

56. Appendix A to Part 380 is revised to read as follows:

Appendix A to Part 380—Minimum Filing Requirements for Environmental Reports Under the Natural Gas Act.

BILLING CODE 6714–01–U

Environmental Reports Under the Natural Gas Act.

Resource Report 1—General Project Description

1. Provide a detailed description and location map of the project facilities. (§ 380.12(c)(1)).

2. Describe any nonjurisdictional facilities that would be built in association with the project. (§ 380.12(c)(2)).

3. Provide current original U.S. Geological Survey (USGS) 7.5-minute-series topographic maps with mileposts showing the project facilities; (§ 380.12(c)(3)).

4. Provide aerial images or photographs or alignment sheets based on these sources with mileposts showing the project facilities; (§ 380.12(c)(3)).

5. Provide plot/site plans of compressor stations showing the location of the nearest noise-sensitive areas (NSA) within 1 mile. (§ 380.12(c)(3,4)).

6. Describe construction and restoration methods. (§ 380.12(c)(6)).

7. Identify the permits required for construction across surface waters. (§ 380.12(c)(9)).

8. Provide the names and addresses of all landowners whose land would be crossed by the project facilities. Include the names and addresses of all residents adjacent to new or modified compressor stations. (§ 380.12(c)(10)).

Resource Report 2—Water Use and Quality

1. Identify all perennial surface waterbodies crossed by the proposed project and their water quality classification. (§ 380.12(d)(1)).

2. Identify all waterbody crossings that may have contaminated waters or sediments. (§ 380.12(d)(1)).

3. Identify watershed areas, designated surface water protection areas, and sensitive waterbodies crossed by the proposed project. (§ 380.12(d)(1)).

4. Provide a table (based on NWI maps if delineations have not been done) identifying all wetlands, by milepost and length, crossed by the project (including abandoned pipeline), and the total acreage and acreage of each wetland type that would be affected by construction. (§ 380.12(d)(1 & 4)).

5. Discuss construction and restoration methods proposed for crossing wetlands, and compare them to staff's Wetland and Waterbody Construction and Mitigation Procedures; (§ 380.12(d)(2)).

6. Describe the proposed waterbody construction, impact mitigation, and restoration methods to be used to cross surface waters and compare to the staff's Wetland and Waterbody Construction and Mitigation Procedures. (§ 380.12(d)(2)).

7. Provide original National Wetlands Inventory (NWI) maps or the appropriate state wetland maps, if NWI maps are not available, that show all proposed facilities and include milepost locations for proposed pipeline routes. (§ 380.12(d)(4)).

8. Identify all U.S. Environmental Protection Agency (EPA)- or state-designated aquifers crossed. (§ 380.12(d)(9)).

Resource Report 3—Vegetation and Wildlife

1. Classify the fishery type of each surface waterbody that would be crossed, including fisheries of special concern. (§ 380.12(e)(1)).

2. Describe terrestrial and wetland wildlife and habitats that would be affected by the project. (§ 380.12(e)(2)).

3. Describe the major vegetative cover types that would be crossed and provide the acreage of each vegetative cover type that would be affected by construction. (§ 380.12(e)(3)).

4. Describe the effects of construction and operation procedures on the fishery resources and proposed mitigation measures. (§ 380.12(e)(4)).

5. Evaluate the potential for short-term, long-term, and permanent impact on the wildlife resources and state-listed endangered or threatened species caused by construction and operation of the project and proposed mitigation measures. (§ 380.12(e)(4)).

6. Identify all federally listed or proposed endangered or threatened species that potentially occur in the vicinity of the project and discussion results of consultations with other agencies. (§ 380.12(e)(5)).

7. Describe any significant biological resources that would be affected. Describe impact and any mitigation proposed to avoid or minimize that impact. (§ 380.12(e)(4 & 6)).

Resource Report 4—Cultural Resources

See § 380.14 and ''OPR's Guidelines for Reporting on Cultural Resources Investigations'' for further guidance.

1. Initial cultural resources consultation and documentation, and documentation of consultation with Native Americans. (§ 380.12(f)(1)(ii) & (2)).

2. Overview/Survey Report(s). (§ 380.12(f)(1)(iii) & (2)).

Resource Report 5—Socioeconomics

1. For major aboveground facilities and major pipeline projects that require an EIS, describe existing socioeconomic conditions within the project area. (§ 380.12(g)(1)).

2. For major aboveground facilities, quantify impact on employment, housing, local government services, local tax revenues, transportation, and other relevant factors within the project area. (§ 380.12(g)(2–6)).

Resource Report 6—Geological Resources

1. Identify the location (by milepost) of mineral resources and any planned or active surface mines crossed by the proposed facilities. (§ 380.12(h)(1 & 2)).

2. Identify any geologic hazards to the proposed facilities. (§ 380.12(h)(2))

3. Discuss the need for and locations where blasting may be necessary in order to construct the proposed facilities. (§ 380.12(h)(3))

4. For LNG projects in seismic areas, the materials required by ''Data Requirements for the Seismic Review of LNG Facilities,'' NBSIR84–2833. (§ 380.12(h)(5))

5. For underground storage facilities, how drilling activity by others within or adjacent to the facilities would be monitored, and how old wells would be located and monitored within the facility boundaries. (§ 380.12(h)(6))

Resource Report 7—Soils

1. Identify, describe, and group by milepost the soils affected by the proposed pipeline and aboveground facilities. (§ 380.12(i)(1))

2. For aboveground facilities that would occupy sites over 5 acres, determine the acreage of prime farmland soils that would be affected by construction and operation. (§ 380.12(i)(2))

3. Describe, by milepost, potential impacts on soils. (§ 380.12(i)(3,4))

4. Identify proposed mitigation to minimize impact on soils, and compare with the staff's Upland Erosion Control, Revegetation, and Maintenance Plan. (§ 380.12(i)(5))

Resource Report 8—Land Use, Recreation and Aesthetics

1. Classify and quantify land use affected by: (§ 380.12(j)(1))

a. Pipeline construction and permanent rights-of-way (§ 380.12(j)(1));

b. Extra work/staging areas (§ 380.12(j)(1));

c. Access roads (§ 380.12(j)(1));

d. Pipe and contractor yards (§ 380.12(j)(1)); and

e. Aboveground facilities (§ 380.12(j)(1)).

2. Identify by milepost all locations where the pipeline right-of-way would at least partially coincide with existing right-of-way, where it would be adjacent to existing rights-of-way, and where it would be outside of existing right-of-way. (§ 380.12(j)(1))

3. Provide detailed typical construction right-of-way cross-section diagrams showing information such as widths and relative locations of existing rights-of-way, new permanent right-of-way, and temporary construction right-of-way. (§ 380.12(j)(1))

4. Summarize the total acreage of land affected by construction and operation of the project. (§ 380.12(j)(1))

5. Identify by milepost all planned residential or commercial/business development and the time frame for construction. (§ 380.12(j)(3))

6. Identify by milepost special land uses (e.g., sugar maple stands, specialty crops, natural areas, national and state forests, conservation land, etc.). (§ 380.12(j)(4))

7. Identify by beginning milepost and length of crossing all land administered by Federal, state, or local agencies, or private conservation organizations. (§ 380.12(j)(4))

8. Identify by milepost all natural, recreational, or scenic areas, and all registered natural landmarks crossed by the project. (§ 380.12(j)(4 & 6))

9. Identify all facilities that would be within designated coastal zone management areas. (§ 380.12(j)(4))

10. Identify by milepost all residences that would be within 50 feet of the construction right-of-way or extra work area. (§ 380.12(j)(5))

11. Identify all designated or proposed candidate National or State Wild and Scenic Rivers crossed by the project. (§ 380.12(j)(6))

12. Describe any measures to visually screen aboveground facilities, such as compressor stations. (§ 380.12(j)(11))

13. Demonstrate that applications for rights-of-way or other proposed land use

have been or soon will be filed with Federal land-managing agencies with jurisdiction over land that would be affected by the project. (§ 380.12(j)(12))

Resource Report 9—Air and Noise Quality

1. Describe existing air quality in the vicinity of the project. (§ 380.12(k)(1))
2. Quantify the existing noise levels (day-night sound level (L_{dn}) and other applicable noise parameters) at noise-sensitive areas and at other areas covered by relevant state and local noise ordinances. (§ 380.12(k)(2))
3. Quantify existing and proposed emissions of compressor equipment, plus construction emissions, including nitrogen oxides (NO_X) and carbon monoxide (CO), and the basis for these calculations. Summarize anticipated air quality impacts for the project. (§ 380.12(k)(3))
4. Describe the existing and proposed compressor units at each station where new, additional, or modified compression units are proposed, including the manufacturer, model number, and horsepower of the compressor units. (§ 380.12(k)(4))
5. Identify any nearby noise-sensitive area by distance and direction from the proposed compressor unit building/enclosure. (§ 380.12(k)(4))
6. Identify any applicable state or local noise regulations. (§ 380.12(k)(4))
7. Calculate the noise impact at noise-sensitive areas of the proposed compressor unit modifications or additions, specifying how the impact was calculated, including manufacturer's data and proposed noise control equipment. (§ 380.12(k)(4))

Resource Report 10—Alternatives

1. Address the ''no action'' alternative. (§ 380.12(l)(1))
2. For large projects, address the effect of energy conservation or energy alternatives to the project. (§ 380.12(l)(1))
3. Identify system alternatives considered during the identification of the project and provide the rationale for rejecting each alternative. (§ 380.12(l)(1))
4. Identify major and minor route alternatives considered to avoid impact on sensitive environmental areas (e.g., wetlands, parks, or residences) and provide sufficient comparative data to justify the selection of the proposed route. (§ 380.12(l)(3))
5. Identify alternative sites considered for the location of major new aboveground facilities and provide sufficient comparative data to justify the selection of the proposed site. (§ 380.12(l)(3))

Resource Report 11—Reliability and Safety

Describe how the project facilities would be designed, constructed, operated, and maintained to minimize potential hazard to the public from the failure of project components as a result of accidents or natural catastrophes. (§ 380.12(m))

Resource Report 12—PCB Contamination

1. For projects involving the replacement or abandonment of facilities determined to have PCBs, provide a statement that activities would comply with an approved EPA disposal permit or with the requirements of the TSCA. (§ 380.12(n)(1))
2. For compressor station modifications on sites that have been determined to have soils contaminated with PCBs, describe the status of remediation efforts completed to date. (§ 380.12(n)(2))

Resource Report 13—Additional Information Related to LNG Plants

Provide all the listed detailed engineering materials. (§ 380.12(o))

Billing Code 6714–01–M

PART 385—RULES OF PRACTICE AND PROCEDURE

57. The authority citation for part 385 continues to read as follows:

Authority: 5 U.S.C. 551–557; 15 U.S.C. 717–717z, 3301–3432; 16 U.S.C. 791a–825r, 2601–2645; 31 U.S.C. 9701; 42 U.S.C. 7101–7352; 49 U.S.C. 60502; 49 App. U.S.C. 1085.

58. In § 385.2001, paragraph (b)(3) is revised to read as follows:

§ 385.2001 Filings (Rule 2001).

* * * * *

(b) * * *

(3) The Secretary, or the office director to whom the filing has been referred, will send a letter of rejection with an indication of the deficiencies in the filing and the reasons for rejection.

* * * * *

[FR Doc. 99–11247 Filed 5–13–99; 8:45 am]

BILLING CODE 6717–01–U

federal register

Friday
May 14, 1999

Part IV

Department of Labor

Office of the Secretary

Job Training Partnership Act (JTPA), Title IV–D, Demonstration Program: Women in Apprenticeship and Nontraditional Occupations; Notice

DEPARTMENT OF LABOR

Office of the Secretary

Job Training Partnership Act (JTPA), Title IV–D, Demonstration Program: Women in Apprenticeship and Nontraditional Occupations

AGENCY: Women's Bureau, Department of Labor.

ACTION: Notice of Availability of Funds and Solicitation for Grant Applications (SGA 99–03).

SUMMARY: All information required to submit a proposal is contained in this announcement. Applicants for grant funds should read this notice in its entirety and respond as directed. Grant proposals that are not completed as directed will be judged nonresponsive and will not be evaluated.

The Women's Bureau (WB), U.S. Department of Labor (DOL) announces the sixth and final year of the Solicitation for Grant Applications (SGA) first authorized under the Women in Apprenticeship and Nontraditional Occupations (WANTO) Act of 1991. The major provisions of the WANTO legislation are to ''assist business in providing women with opportunities in apprenticeship and nontraditional occupations.'' Moreover, the WANTO grant program funds Community-Based Organizations (CBOs) to provide technical assistance (TA) to employers and labor unions (E/LUs) that will ''enable business to meet the challenge of Workforce 2000.''

The Women's Bureau has co-administered WANTO with the DOL's Bureau of Apprenticeship and Training (BAT), with the WB having responsibility for implementing the grant process. Congress first appropriated funds for WANTO in Fiscal Year (FY) 1994. Since then, WANTO has been funded through JTPA (Title IV–D). FY 1999 will be the last WANTO solicitation, as the grant program will expire with JTPA on July 1, 2000. JTPA will be superseded by the Workforce Investment Act.

For the final WANTO solicitation, the Department will competitively award grants to CBOs who best represent the best community-based organizations from the segment of CBOs actively involved in advocacy, technical assistance, and services to increase the participation of women in apprenticeship and nontraditional occupations (A/NTO). These CBOs must provide technical assistance (TA) to Employers and/or Labor Unions (E/LUs) to prepare them to successfully recruit, train, and retain women in apprenticeable and other nontraditional occupations. In addition, TA must include strategic planning with E/LUs for identifying sources of support services—child care, transportation, and necessary transitional costs—to ensure the successful transition of women to the workplace and/or the completion of training. With the combination of technical TA for E/LUs and their commitment for support services for women, the Department expects employers and labor unions ''to expand the employment and self-sufficiency options of women.''

Further, the Department gives priority consideration to broadening the geographic scope of WANTO, CBO diversity, (including those concerned with the employment of women with physical and/or cognitive disabilities), and developing a more concentrated industrial mix of E/LUs in growing industries. CBOs and E/LUs must be committed to increasing the participation of women in A/NTO in high wage jobs, including low income women residing in rural and urban Empowerment Zones (EZs) and Enterprise Communities (ECs) across the country. CBOs proposals must include a plan to track, not only the specific TA resources and tools used, but also the movement of women into (or out of) A/NTO among their grant related E/LUs. Such an interactive working relationship should promote CBOs and E/LUs working together to change workplace cultures and working practices to provide economic justice and equity for women in the workplace.

Therefore, the DOL is seeking CBOs (including those concerned with employment transition of women with physical and/or cognitive disabilities) with the following experience:

(1) Established and growing employer/labor union working relationships;

(2) Proven service delivery to assist women to enter and remain in A/NTO as the major component of its employment and training activities, including outreach, orientation, mentoring, support groups, networks, workplace consultations (including troubleshooting and other worksite resolution practices), employee and supervisory workshops, seminars and other workplace specific strategic planning to increase the participation of women in A/NTO; and

(3) Recognized leadership credentials in the A/NTO community that also promotes leadership in social and economic change for women and their families to economic self-sufficiency, as well as mentoring relationships with other CBOs working in A/NTO.

As WANTO activities document the end of the millennium and, we begin to chart the next steps to increase women in A/NTO into the 21st Century, WANTO and related projects will provide a rich source of policy and program recommendations.

With SGA 99–03, the Department will give priority consideration and 25 bonus points to CBOs who respond with proposals that both (1) expand the geographic reach and influence of WANTO to areas previously not served, or have less than two WANTO grants in a State, especially those in underserved geographic areas of the Southeast, Southwest, Northwest, and Rocky Mountains, and (2) concentrate TA programs for E/LUs in a single industry or paid employment training group—especially one of the following: Manufacturing, Information Technology, Medical Technology, and registered apprenticeship and on-the-job trainees programs in Highway Construction, and Building Trades Construction.

The above discussion summarizes the general focus of SGA 99–03; however, applicants are again urged to read the SGA in its entirety to ensure that their submission is fully responsive to SGA 99–03. WANTO grant awards are competitive and based only on how responsive an applicant's proposal is to the SGA and its evaluation criteria.

This notice describes the background, the application process, statement of work, evaluation criteria, and reporting requirements for this Solicitation for Grant Applications (SGA 99–03). WB anticipates that a total amount of $1,000,000 will be available for the support of all Fiscal Year 1999. (See Part II.C. for funding limitations per grant.)

DATES: One (1) ink-signed original, complete grant application plus five (5) copies of the Technical Proposal and two (2) copies of the Cost Proposal shall be submitted to the U.S. Department of Labor, Office of Procurement Services, Room N–5416, Reference SGA 99–03, 200 Constitution Avenue, N.W., Washington, D.C. 20210, not later than 4:45 p.m. EST, August 6, 1999. Hand-delivered applications must be received by the Office of Procurement Services by that time.

ADDRESSES: Applicants who intend to submit a proposal must register immediately with the Grant Officer in order to receive any amendment to this solicitation that is issued. Please send registration to U.S. Department of Labor, Office of Procurement Services, Attention: Grant Officer, Reference SGA 99–03, Room N–5416, 200 Constitution Avenue, N.W., Washington, D.C. 20210.

Grant applications must be mailed to U.S. Department of Labor, Office of Procurement Services, Attention: Grant Officer, Reference SGA 99–03, Room N–5416, 200 Constitution Avenue, N.W., Washington, D.C. 20210. Applicants are encouraged to verify delivery to this office directly through their delivery service and as soon as possible.

FOR FURTHER INFORMATION CONTACT: Applications will not be mailed. The **Federal Register** may be obtained from your nearest government office or library. Questions concerning this solicitation may be sent to Lisa Harvey at the following Internet address: lharvey@dol.gov.

Part I. Background

The Women in Apprenticeship and Nontraditional Occupations (WANTO) Act—Public Law 102–530, signed October 27, 1992—The Act has three major activities that affect this SGA:

1. Outreach to Employers and Labor Unions. DOL will promote the Act's program to employers and labor unions by informing them of the availability of technical assistance and keeping a database of employers and community-based organizations with active grants.
2. Technical Assistance. DOL will provide grants to community-based organizations to deliver technical assistance to employers and labor unions to prepare them to recruit, train, and employ women in apprenticeable and nontraditional occupations.
3. Liaison Role of Department of Labor. DOL will serve as follows: (1) to act as a liaison between employers, labor, and the community-based organizations providing technical assistance; (2) coordinating, conducting regular assessment, and seeking input of employers and labor unions.

The Women's Bureau has been the champion of the concerns of working women since its creation by Congress in 1920. For over 70 years, improving employment opportunities and related equity issues has been the driving force of the Bureau's policies and programs. From its national office and 10 regional offices, the Bureau conducts advocacy and outreach activities across the United States. The Bureau participates in meetings with international visitors and others who are concerned with the employment and related social issues of working women. Within the Department of Labor, the WB Director serves as the policy advisor to the Secretary, ensuring that women's voices are heard and that their priorities are represented in the public policy arena.

The Bureau has a history of encouraging women to consider the wide array of apprenticeable and other nontraditional occupations (NTOs) as one way to obtain economic self-sufficiency for themselves and their families. NTOs can be characterized as the often-cited skilled building trades in construction, as well as the emerging ''good'' or high-pay jobs in nonconstruction industries as the pervasiveness of microelectronics fuels advances in high technology. One thing many of the high-pay jobs have in common is the lack of women employed in them.

The lack of a critical mass of women in apprenticeship and other good, high-pay jobs has resulted in continued workplace occupational segregation that fuels pay inequities and other artificial employment barriers to women's success in the workplace, including apprenticeship and other nontraditional occupations. For example, studies point out that once hired, women in construction face problems (sexism, racism, homophobia, inadequate toilet facilities, health and safety, isolation from other women, etc.) that erode their retention in jobs. In other nonconstruction occupations, the lack of developmental work assignments and mentors results in women being confined by ''glass ceilings'' and ''sticky'' floors. These artifical barriers are beyond the usual problems faced by all women and some men—child care, sexual harassment, pay equity, balancing work and family responsibilities. The WANTO grant program explores collaborative ways for employers and labor unions to provide opportunities for women in apprenticeship and other nontraditional occupations by developing a ''women-friendly'' environment.

The Bureau of Apprenticeship and Training co-administers WANTO with the Women's Bureau. BAT was established in 1937 as the national administrative agency in the Department of Labor to carry out the objectives of the National Apprenticeship Act (also known as the Fitzgerald Act), guided by the recommendations of the Federal Committee on Apprenticeship. BAT has the objective to stimulate and assist industry in the development, expansion, and improvement of apprenticeship and training programs designed to provide the skilled workers required by the American economy.

Under the National Apprenticeship Act, the Bureau is responsible for providing services to existing apprenticeship programs and technical assistance to organizations who would like to establish a BAT registered apprenticeship program. BAT provides apprenticeship services in all States, and registers programs and apprentices in 23 States where there is no State Apprenticeship Agency or Council. In the 27 States, the District of Columbia, the Virgin Islands, and Puerto Rico, programs are registered by State Apprenticeship Agencies or Councils which are recognized by the Secretary of Labor. Most State agencies receive policy guidance from apprenticeship councils composed of employers, labor groups, and public representatives.

The BAT works very closely with State Apprenticeship Agencies/Councils (SAC) and the educational system to deliver support services at the national, State and local level. When apprentices finish their training, they receive certificates of completion of apprenticeship. These are issued by the State apprenticeship agencies, or in those States not having such an agency, by BAT, in accordance with its recommended standards. BAT is committed to improving the access of women to apprenticeship training to increase their employment in jobs that have historically put men on the career ladder to successful working careers.

Definitions

Nontraditional Occupations (NTOs) are those where women account for less than 25 percent of all persons employed in a single occupational group.

Pre-Apprenticeship Programs are for women (and others) to prepare them to keep pace with occupational skills training or entry-level employment in nontraditional occupations. The curriculum includes pre-vocational instruction in identification and use of tools, blueprint reading, basic shop skills, and safety procedures, as well as math skills, and physical conditioning.

Apprenticeship is a formal paid training-work agreement where labor and management work together to promote learning on the job. (Some BAT registered apprenticeship programs are operated by employers independent of labor unions.) To support the ''hands on'' learning, there must be related theoretical instruction (often classroom). After successfully completing the BAT registered program standards—usually three to five years—the apprentice is awarded a certificate of completion by either BAT or the State Apprenticeship Council (SAC).

Employers or groups of employers and unions design, organize, manage, and finance apprenticeship programs under the standards developed and registered with BAT or BAT-recognized State Apprenticeship Agencies. They also select apprentices who are trained to meet certain predetermined occupational standards.

Community-Based Organizations (CBOs) are as defined in Section 4(5) of the Job Training Partnership Act (29 U.S.C. 1501(5)): private nonprofit organizations which are representative of communities or significant segments of communities and which provide job training services. For this solicitation, communities or significant segments of communities are the private nonprofit organizations that have demonstrated at least three years experience in (1) the operation and delivery of employment and training related services to promote women in apprenticeship and other nontraditional occupations, (2) community recognition of leadership in advocacy and service to promote economic equity, justice, and social change for women and their families, and (3) the development of policies, programs, and technical assistance for employers and labor unions for the recruitment, selection, training, placing, retaining, and otherwise preparation of women to enter and remain in apprenticeship and other nontraditional occupations.

Please note that eligible applicants must not be classified under the IRS Tax Code as a 501(c)(4) entity.

A. Authorities

The technical assistance grants were first authorized under the Women in Apprenticeship and Nontraditional Occupations (WANTO) Act, Public Law 102–530, approved October 27, 1992.

B. Purpose of the Demonstration

The purpose of the WANTO demonstration program is to assist business to provide apprenticeship and nontraditional opportunities for women. The Department will make grants to community-based organizations and provide technical assistance to employers and labor unions to encourage and prepare them to increase the participation of women in apprenticeship and nontraditional occupations in their workplaces. Such technical assistance should result in an increase of women employed in jobs that pay a wage to support them and their families.

Part II. Application Process

A. Eligible Grant Applicants

Please note well that eligible grant applicants must not be classified under the IRS Tax Code as a 501(c)(4) entity.

1. Private, Nonprofit, Community-Based Organizations (CBOs) that represent and provide advocacy, training, and placement of women in apprenticeship and other nontraditional occupations (A/NTO) are the only entities eligible for grant awards.

2. Applicant CBOs' proposals must document their experience and expertise in A/NTO services and TA delivery in the following areas:

a. Established and growing employer/labor union working relationships with A/NTO community sources for exploring new working relations;

b. Provided services to assist women to enter and remain in A/NTO as the major component of their employment and training activities, including outreach, orientation, mentoring, support groups, networks, workplace consultations (including troubleshooting and other worksite problem resolutions and changes in employer and workplace practices), employee and supervisory workshops, seminars and other workplace specific strategic planning to increase the participation of women in A/NTO; and

c. Documented leadership in the A/NTO community to promote leadership for economic equity, justice, and social change for women and their families that also support economic self-sufficiency.

3. In addition, Grant Applicant CBOs' proposals must document their presence and effectiveness in the broader community beyond A/NTO services for a fee, to include advocacy for economic and social justice that promotes equity for women and their families.

4. Grant Applicant CBOs' proposals must include a management and staff loading plan.

a. The management plan should include the CBO's organizational chart and accompanying narrative that differentiate between elements of the Applicant's staff, subcontractors, or consultants, who will be retained.

b. The staff loading plan must identify all key tasks and the hours required to complete each task. Labor estimates for each task must be broken down by individuals assigned to the task, with subcontractors and consultants. All key tasks must be charted to show time required to perform them by months or weeks.

c. CBOs' proposals must list the name, trade, and organizational position of tradeswomen and other women in nontraditional occupations on staff or on their organization's Board of Directors. Include the dates when tradeswomen served in active paid or unpaid positions in your organization.

d. CBOs' proposal submissions should include a listing of all items for which grant funds will be expended. (Do not include any cost information for this item in the technical proposal, but expenditure items must be listed.)

e. CBOs' proposal submissions should include copies of the CBO's budget and major funding sources for the past three (3) years, including foundation and government grants and other types of funding.

5. Public bodies such as JTPA administrative entities, public schools, colleges, and hospitals are not eligible for WANTO grants.

B. Employers and Labor Unions Are Eligible for TA

1. Private Sector Employers and Labor Unions are eligible to request and receive TA provided by CBOs with a WANTO grant. The goal of WANTO is to assist businesses to provide opportunities for women in A/NTO in the private economy.

a. Employers and Labor Unions may request that the Department of Labor match them with a CBO.

b. TA Requests from Employers and Labor Unions may be delivered with a specific Applicant CBO's proposal, or independent of a specific CBO.

c. Regardless of the method, all employers and labor unions must provide the information described in item 2. below either to their chosen CBO or directly to the U.S. Department of Labor, Office of Procurement Services, Room N–5416, Attention: Lisa Harvey, 200 Constitution Avenue, N.W., Washington, D.C. 20210.

2. All Employers and Labor Unions must provide a written commitment for technical assistance by responding to the following:

a. A description of the need for assistance;

b. A description of the types of apprenticeable occupations or nontraditional occupations in which the employer or labor union would like to train or employ women;

c. Assurances that there are or will be suitable and appropriate employment available in the apprenticeable occupations or in the nontraditional occupations being targeted; and

d. Commitments that all reasonable efforts should be made to place women in apprenticeable occupations or nontraditional occupations as they develop skills.

C. Contents

To be considered responsive to this SGA, each application must consist of, and follow the order of, the sections listed in Part III of this solicitation. The application must also include information which the applicant believes will address the selection criteria identified in Part IV. Technical proposals shall not exceed 20 single sided, double spaced, 10 to 12 pitch typed pages (not including attachments). Any proposal that does

not conform to these standards shall be deemed nonresponsive to this SGA and will not be evaluated.

1. Technical Proposal

Each proposal shall include: (1) a two-page abstract summarizing the proposal, and (2) a complete description of the CBO's program for technical assistance, including information required in *Part III and IV*. No cost data or reference to price shall be included in the technical proposal although the technical proposal must include the items—publications, seminars, E/LU consultations, troubleshooting, etc.—for which grant funds are to be spent.

2. Cost Proposal

The cost proposal is a physically separate document and shall not be included in the twenty (20) page limit. The cost (business) proposal must be separate from the technical proposal. (If applicants do not have the current version of the standard grant forms listed below, they must download the forms from the following OMB website address: www.whitehouse.gov/omb/grants/). The transmittal letter and the grant assurances and certification forms shall be attached to the business proposal, which shall consist of the following:

a. Standard Form 424 ''Application for Federal Assistance,'' signed by an official from the applicant's organization who is authorized to enter the organization into a grant agreement with the Department of Labor. The *Catalog of Federal Domestic Assistance Number (CFDA) is 17.700*;

b. Standard Budget Form 424A ''Budget Information Form,''; and

c. Budget Narrative; provide a narrative explanation of the budget which describes all proposed costs and indicates how they are related to the operation of the project. Provide this information separately for the amount of requested Federal funding and the amount of proposed Non-Federal contribution. In an application which proposes to fund staff positions, the budget narrative must provide information which describes the number of proposed positions by title and by the amount of staff time and salary charged to Federal and Non-Federal funding resources. The Budget Narrative provides the detailed description of the costs reflected on the SF 424A.

D. Funding Levels

The Department expects to have $1,000,000 to be disbursed through WANTO grants. The Department expects to make up to fifteen (15) awards to Community-Based Organizations (CBOs). The Women's Bureau expects awards to range from approximately $50,000 to $75,000, depending upon the number of employer/labor union written commitments included with the proposal—between five (5) and ten (10)—and the design, size, and scope of the technical assistance proposed for this demonstration and reflected in the E/LU technical assistance requests.

E. Length of Grant and Grant Awards

The initial performance period for the grants awarded under this SGA shall be for twelve (12) months with one (1) option to extend for up to three months as a no-cost extension to complete final reports. Each applicant shall reflect in their application the intention to begin operation no later than *September 1999*.

F. Submission

One (1) ink-signed original, complete grant application (plus five (5) copies of the Technical Proposal and two (2) copies of the Cost Proposal must be submitted to the U.S. Department of Labor, Office of Procurement Services, Room N–5416, 200 Constitution Avenue, N.W., Washington, D.C. 20210, not later than 4:45 p.m. EST, August 6, 1999. Hand delivered applications must be received by the Office of Procurement Services by that time. Any application received at the Office of Procurement Services after 4:45 p.m. EST will not be considered unless it is received before an award is made and:

1. It was sent by registered or certified mail not later than the fifth calendar day before August 6, 1999 (i.e., not later than August 1, 1999);

2. It is determined by the Government that the late receipt was due solely to mishandling by the Government after receipt at the U.S. Department of Labor at the above address; or

3. It was sent by U.S. Postal Service Express Mail Next Day Service-Post Office to Addressee, not later than 5:00 p.m. EST at the place of mailing two working days, excluding weekends and Federal holidays, prior to August 6, 1999 (i.e., not later than 5:00 p.m. EST August 4, 1999).

The only acceptable evidence to establish the date of mailing of a late application sent by registered or certified mail is the U.S. Postal Service postmark on the envelope or wrapper and on the original receipt from the U.S. Postal Service. If the postmark is not legible, an application received after the above closing time and date shall be processed as if mailed late. ''Postmark'' means a printed, stamped or otherwise placed impression (*not* a postage meter machine impression) that is readily identifiable without further action as having been applied and affixed by an employee of the U.S. Postal Service on the date of mailing. Therefore, applicants shall request that the postal clerk place a legible hand cancellation bull's-eye postmark on both the receipt and the wrapper or envelope.

The only acceptable evidence to establish the date of mailing of a late application sent by U.S. Postal Service Mail Next Day Service-Post Office to Addressee is the date entered by the post office receiving clerk on the ''Express Mail Next Day Service-Post Office to Addressee'' label and the postmark on the envelope or wrapper and on the original receipt from the U.S. Postal Service. ''Postmark'' has the same meaning as defined above. Therefore, applicants shall request that the postal clerk place a legible hand cancellation bull's-eye postmark on both the receipt and the envelope or wrapper.

The only acceptable evidence to establish the time of receipt at the U.S. Department of Labor is the date/time stamp of the Office of Procurement Services on the application wrapper or other documentary evidence of receipt maintained by that office. Applications sent by E-mail, telegram, or facsimile (Fax) will *not* be accepted.

Part III. The Statement of Work—Key Features

A. Technical Assistance

1. CBOs are to provide technical assistance (TA) that may include a broad range of activities to prepare employers and labor unions (E/LUs) to provide opportunities for women in apprenticeship and other nontraditional occupations (A/NTO). CBOs should encourage E/LUs to work with them to assess their workplaces and develop strategic plans for changes in the workplace and in work practices that support women. Requests may include linkages of pre-apprenticeship programs to a commitment for employment and/or sponsored apprenticeship training. Such TA should result in jobs that pay a living wage that will support women and their families. Support services are of major importance to sustaining women to enter and complete training and entry employment. Child care, transportation, and related transitional costs—union fees, tools, and uniforms—are the support services most often cited as necessary for women.

a. Applicant CBOs should respond with a program designed to build on established working relationships with employers and labor unions and to develop new working relationships to

provide TA to, at least five (5), but no more than ten (10), private sector E/LUs. The TA and working relationships should promote an increase in the participation of women in apprenticeship and other A/NTO in the recipient E/LU workplace.

b. CBO proposal should include E/LUs selected from the following five (5) industry and paid employment training groups—manufacturing, information technology, medical technology, registered apprenticeship and on-the-job training programs in highway and the building trades construction industries.

c. Similarly, the Department is also interested in leveraging WANTO technical assistance to private sector employers and labor unions in Empowerment Zones and Enterprise Communities (EZ/EC) to increase the participation of EZ/EC women returning to work, after welfare or other long-term work disruptions, in apprenticeship and nontraditional jobs/career paths.

B. Support Services

1. CBO proposal should include a plan for support services for women when the TA results in women moving into apprenticeship or other paid training or other NTO employment or E/LU-supported job referral commitments.

a. Support service plans should include cooperative E/LU programs along with services available from the workplace and/or employee's community.

b. Support services strategic planning for support services should include, at least, child care, transportation, and women's transitional costs.

C. Broaden Geographic Coverage

1. The Department is also seeking to broaden the geographic coverage of WANTO CBOs to areas unserved by previous WANTO grants or in States with less than two previous WANTO grantees, particularly in the Southeast, Southwest, Northwest and Rocky Mountain areas.

a. Therefore, the Department will also consider (1) proposals from established CBOs that also include less experienced CBOs in unserved geographic areas to provide TA to build the organizational and TA capacity of the less experienced CBOs to provide TA to increase women in A/NTO and/or;

b. (2) Joint proposals of several CBOs who have bundled their strengthens together to form one grant application. The proposal will provide TA in unserved States that propose to build their regional capacity to provide TA to employers and labor unions to promote women in A/NTO.

D. Leverage of WANTO Funding and Continuance

1. The proposed project submissions should include any leverage or co-funding anticipated by this submission, particularly leverage with other specific EZ/EC programs (e.g., HUD or USDA) and interaction with overall EZ/EC program contacts.

2. The proposed project submission should include any activities to encourage and promote the continuation or expansion of grant activities beyond the grant's period of program performance.

E. Bonus Points

1. Priority consideration and 25 bonus points will be added to the numerical rating of proposals from CBOs that include TA *both* in (a) geographic areas unserved by WANTO grants in States with less than two WANTO grants from previous years and to provide TA for (b) E/LUs from a single industry or paid employment training group.

a. The broadened geographic areas include, CBOs from areas unserved by WANTO CBOs, especially the Southeast, Southwest, Northwest, and Rocky Mountain States, will receive priority consideration.

b. The single industry and/or paid employment training program, including apprenticeship, can be selected from the following: manufacturing, information technology, medical technology, and registered apprenticeship and paid employment training in highway and the building trades construction industries.

c. CBOs concerned with the employment of women with physical and/or cognitive disabilities that have programs to promote women in the industries of concern to this SGA and mentioned above in b.

Part IV. Evaluation Criteria and Selection

Applicants are advised that selection for a grant award is to be made after careful evaluation of technical applications by a panel. Each panelist will evaluate applications against the various criteria on the basis of 100 points. The scores will then serve as the primary basis to select applications for a potential award. Clarification may be requested of grant applicants if the situation so warrants it. Please see Part III, Sections A and B, for additional information on the elements against which proposals will be reviewed.

After proposals are fully evaluated for responsiveness to Technical Evaluation Criteria 1a.-1c., the distribution of bonus points will be determined. Only those proposals whose technical score falls within the technically acceptable range will be eligible to receive bonus points.

	Points
1. Technical Evaluation Criteria	
a. Capabilities and Qualifications of CBO and Staff (A/NTO experience, education, and leadership in the community to foster social and/or economic justice for equity for women and their families moving to self-sufficiency)	50
b. Established program and E/LU Linkages; the written commitment and/or potential for five (5) to ten (10) new working relationships with E/LUs; and other EZ/EC Communities and Welfare to Work Social Agencies	25
c. Quality and Scope of WANTO Project (as discussed/described throughout the SGA 99–03 including workplace assessment and technical assistance strategies for E/LU changes in the workplace culture and work practices to promote the increase in women in apprenticeship and nontraditional occupations; proposed A/NTO outcomes, leverage and continuance TA)	25
2. Bonus Points	
a. Priority Focus (See Part III, A. Statement of Work—Key Features, E. Bonus Points)	30
3. Cost Criteria	
Proposals will be scored, based on their costs in relation to other proposals submitted in response to this SGA.	

	Points
4. Total Score	
Technical quality of proposals will be weighted three (3) times the estimated price in ranking proposals, for purposes of selections for awards. Proposals received will be evaluated by a review panel based on the criteria immediately above, in Technical Evaluation Criteria 1 and 2. The panel's recommendations will be advisory, and final awards will be made based on the best interests of the Government, including but not limited to such factors as technical quality, geographic balance, occupational/industrial impact, and diversity in service providers..	

The Department wishes to make it clear that it is not simply the best written proposals that will be chosen, but rather those which demonstrate the greatest experience and commitment to assisting employers and labor organizations to successfully develop successful strategies to increase the participation of women in higher-paying apprenticeship and nontraditional occupations and to expand the employment and self-sufficiency options of women returning to work after welfare and other work and family disruptions. In addition, the Department considers geographic and race-ethnic diversity in the array of award-winning proposals important considerations in making the final awards.

The submission of the same proposal from any prior year WANTO competition does not guarantee an award under this solicitation. Although the Government reserves the right to award on the basis of the initial proposal submission, the Government may establish a competitive range or technically acceptable range based upon proposal evaluation, for the purpose of selecting qualified applicants. The panel's conclusions are advisory in nature and not binding on the Grant Officer. The Government reserves the right to ask for clarification or hold discussions, but is not obligated to do so. The Grant Officer's determination for award under this SGA 99–03 is the final agency action.

Part V

A. Deliverables

(This section is provided only so that grantees may more accurately estimate the staffing budgetary requirements when preparing their proposal. Applicants are to exclude from their cost proposal the cost of any requested travel to Washington, D.C.)

1. No later than four (4) weeks after an award, the grantees and partners shall meet with the Women's Bureau and the Bureau of Apprenticeship and Training at the Post-Award Conference to discuss the demonstration project and related components and technical assistance activities, time lines, technical assistance outcomes, assessment for comment, and final approval. The grantees and partners and the Department will discuss and make decisions on the following program activities:

a. The proposed technical assistance commitments for employment, apprenticeship and related nontraditional occupation activities and responsibilities; the number of partnerships with EZ/EC communities and employers and labor unions to be served.

b. The methodology the proposed partnership will use to support/change management and employee attitudes to promote female workers in nontraditional occupations.

c. The types of systemic change anticipated by technical assistance strategies anticipated to be incorporated into ongoing employer recruitment, hiring, training, and promotion of women in apprenticeship and apprenticeable nontraditional occupations.

d. The occupational, industrial, and geographical impact anticipated.

e. The supportive services to be provided to employers and women after successful placement into employment, apprenticeship, or other supporting nontraditional occupations.

f. The plan for the development and maintenance of a relationship with the State level of the Federal Bureau of Apprenticeship and Training and the State Apprenticeship Council.

The Women's Bureau and the Bureau of Apprenticeship and Training will provide further input orally and in writing, if necessary, within ten (10) working days after the Post-Award Conference.

1. No later than ten (10) weeks after an award, the grantees and the Women's Bureau will confirm the ''plan of action'' and detailed time line for program implementation.

2. No later than twelve (12) weeks after an award, the grantee(s) shall have begun the provision of technical assistance to employers and labor unions to recruit, select, train, place, retain, and other areas of preparation to promote the increase of women in apprenticeable occupations and other nontraditional training for women, characterized by employment growth and above average earnings.

3. No later than sixteen (16) weeks after an award, the first quarterly progress report of work done under this grant will be due. Thereafter, quarterly reports will be due twenty (20) working days after the end of each of the remaining quarters.

Quarterly progress reports must include:

a. A description of overall progress on work performed during the reporting period—(a) the number of employers and labor unions provided onsite, off-site (conferences, workshops, seminars, training, etc., (b) number of women trained (on and off the workplace), placed in apprenticeship or other nontraditional employment. Describe: (1) any linkages of pre-apprenticeship (on and off a workplace) with sponsored apprenticeship: number of women affected or participating in programs; include name and address of workplace/company and person responsible for the operation, (2) number of employers and labor unions receiving technical assistance—name, address, size of the workplace, including proportion of women, include brief profiles of employers and labor organizations, (3) describe any systemic workplace and policy changes—actual or in process, including the hiring and promotion of women already in the workplace, career ladders or other training activities, (4) public presentations, (5) media articles or appearances, (6) publications disseminated, and (7) publications developed.

b. An indication of any current problems which may impede the performance of the grant and the proposed corrective action.

c. A discussion of work to be performed during the next reporting period.

Between scheduled reporting dates the grantee(s) also shall immediately inform the Grant Officer's Technical Representative (GOTR) of significant developments affecting their ability to accomplish the work.

5. No later than sixty-four (64) weeks after an award, the grantee(s) shall submit three (3) copies of the draft Final Report, an integrated draft analysis of

the process and results of the technical assistance activities during the year. The Women's Bureau and the Bureau of Apprenticeship and Training will provide written comments on the draft Report within twenty (20) working days if substantive problems are identified. The grantee's response to these comments shall be incorporated into the Final Report.

6. The Final Report shall cover findings, final performance data, outcome results and assessment, and employer or labor organization plans for follow-up of participants. The Final Report shall provide all information to replicate the project including copies of curriculums, technical assistance materials developed for the project and technical assistance—videos, posters, notices, etc.—as well as any plans for replication and dissemination of information. An Executive Summary of the findings and recommendations shall be included in the Final Report, separately or combined with the Final Report—at the opening. No later than sixty-four (64) weeks after an award, the grantee(s) shall (1) submit one (1) diskette (IBM compatible, WordPerfect 6.1), one (1) camera-ready copy of the Final Report, and five (5) copies of the camera-ready Final Report, bound in a professional manner, and not a collection of loose leaf sheets, and (2) computer-based, electronic files for each of the other products—e.g., manual(s), curriculums, ''how-to-do-it'' handbooks, videos, etc.—paid for with grant funds, along with five (5) copies of the final camera-ready products.

In addition to the grant's Final Report, proposed project submissions should include plans for a ''how-to-do-it'' project replication manual, including awareness/outreach material, technical assistance and curriculum manual(s) and all other materials developed as a result of the grant activities. All grant materials should be submitted with ''hard copy'' and electronic (computer-based) copy.

B. Administrative Provisions

The grant awarded under this SGA shall be subject to the following administrative standards and provisions:

29 CFR Part 97—Uniform Administrative Requirements for Grants and Cooperative Agreements to State and Local Governments.

29 CFR Part 96—Federal Standards for Audit of Federally Funded Grants, Contracts and Agreements.

29 CFR Part 95—Uniform Administrative Requirements for Grants and Cooperative Agreements with Institutions of Higher Education, etc.

C. Certifications and Assurances

If the applicant is awarded a grant, they are required to operate the program in accordance with the following Certifications and Assurances. An original signed and dated signature page providing the following Certifications and Assurances must accompany the Cost Proposal. Each can be downloaded from the OMB website address www.whitehouse.gov/omb/grants/.

D. Allowable Costs

Determinations of allowable costs shall be made in accordance with the following applicable Federal cost principles:

a. State and Local Government—OMB Circular A–87

b. Educational Institutions—OMB Circular A–21

c. Nonprofit Organizations—OMB Circular S–122

d. Profit-making Commercial Firms—48 CFR Part 31

Signed at Washington, D.C. on May 6, 1999.

Lawrence J. Kuss,

Grant Officer.

[FR Doc. 99–12090 Filed 5–13–99; 8:45 am]

BILLING CODE 4510–23–P

federal register

Friday
May 14, 1999

Part V

Department of Housing and Urban Development

24 CFR Part 248 et al.

Section 8 Tenant-Based Assistance; Statutory Merger of Section 8 Certificate and Voucher Programs; Interim Rule

DEPARTMENT OF HOUSING AND URBAN DEVELOPMENT

24 CFR Parts 248, 791, 792 and 982

[Docket No. FR–4428–I–01]

RIN 2577–AB91

Section 8 Tenant-Based Assistance; Statutory Merger of Section 8 Certificate and Voucher Programs

AGENCY: Office of the Secretary, HUD.

ACTION: Interim rule.

SUMMARY: This interim rule amends the regulations for the Section 8 tenant-based rental voucher program. These amendments implement amendments of the United States Housing Act of 1937 by the Quality Housing and Work Responsibility Act of 1998 and related changes. The rule provides for the complete merger of the Section 8 tenant-based Certificate and Voucher programs, into a new Housing Choice Voucher Program.

DATES: *Effective date:* August 12, 1999. Comments due date: Comments on the interim rule and the proposed information collection requirements are due on or before: July 13, 1999.

ADDRESSES: Interested persons are invited to submit written comments regarding this interim rule to the Rules Docket Clerk, Office of General Counsel, Room 10276, Department of Housing and Urban Development, 451 Seventh Street, SW, Washington, DC 20410. Comments should refer to the above docket number and title. A copy of each comment submitted will be available for public inspection and copying between 7:30 a.m. and 5:30 p.m. weekdays at the above address. Facsimile (FAX) comments will not be accepted.

FOR FURTHER INFORMATION CONTACT: Gerald J. Benoit, Office of Public and Indian Housing, Department of Housing and Urban Development, Room 4210, 451 Seventh Street, SW, Washington, DC 20410; telephone (202) 708–0477 (this is not a toll-free number). Hearing or speech impaired individuals may access this number via TTY by calling the toll-free Federal Information Relay Service at 1–800–877–8339.

SUPPLEMENTARY INFORMATION:

I. Section 8 Tenant-Based Program Statutory Provisions Implemented in this Rule

This interim rule implements most of the Section 8 tenant-based program provisions contained in the Quality Housing and Work Responsibility Act of 1998 (Title V of the FY 1999 HUD Appropriations Act; Pub. L. 105–276, approved October 21, 1998; 112 Stat. 2461) (the ''1998 Act''). Section 502 of the 1998 Act states that a purpose of the legislation is ''consolidating the voucher and certificate programs for rental assistance under Section 8 of the United States Housing Act of 1937 (the ''USH Act'' (42 U.S.C. 1437f)) into a single market-driven program that will assist in making tenant-based rental assistance under such section more successful at helping low-income families obtain affordable housing and will increase housing choice for low-income families.'' Of particular significance, this rule implements the merger of the Section 8 tenant-based certificate and voucher programs (section 545 of the 1998 Act, amending 42 U.S.C. 1437f(o)).

A. Description of the Housing Choice Voucher Program implemented by this rule

This rule implements provisions of the 1998 Act which will complete merger of the Section 8 certificate and voucher programs into a single new Section 8 voucher program (authorized under Section 8(o) of the USH Act, 42 U.S.C. 1437f(o)), entitled the Housing Choice Voucher Program. HUD has previously promulgated regulations (known as the ''conforming rule'') which combined and conformed rules for Section 8 tenant-based assistance to the extent permitted by prior law. The Housing Choice Voucher Program has features of the previously authorized certificate and voucher programs, plus new features. The following summarizes major features of the Housing Choice Voucher Program:

1. *Payment standards.* The subsidy amount is based on a payment standard set by the Public Housing Agency (PHA) anywhere between 90% to 110% of the HUD-published fair market rent (FMR). HUD may approve payment standards lower than 90% of FMR and payment standards higher than 110% of FMR. Prior HUD-approved area exception rents will continue to apply in the new voucher program (unless withdrawn or modified by HUD). HUD may require PHA payment standard changes because of incidence of high rent burdens (Section 8(o)(1)(B), (D) and (E) of the USH Act; 42 U.S.C. 1437f(o)(1)(B), (D) and (E); 24 CFR 982.503).

2. *Tenant payment.* A family renting a unit below the payment standard pays as gross rent the highest of: 30% of monthly adjusted income, 10% of monthly income (gross income), the welfare rent (in States where the welfare payment is adjusted in accordance with actual housing costs), or the PHA-established statutory minimum rent. There is no voucher ''shopping incentive'' (for a family that rents a unit below the payment standard). A family renting a unit above the payment standard pays the highest of 30% of monthly adjusted income, 10% of monthly income, the welfare rent, or minimum rent, plus any rent above the payment standard (Section 8(o)(2) (A) and (B) of the USH Act, 42 U.S.C. 1437f(o)(2) (A) and (B); § 982.506(b)).

3. *Maximum initial rent burden.* A family must not pay more than 40% of adjusted income for rent when the family first receives Section 8 tenant-based assistance for occupancy of a particular unit. This new requirement only applies for a family that initially receives tenant-based assistance for occupancy of a unit after the effective date of this rule (called the ''merger date''). However, the maximum initial rent burden requirement is not applicable if the family stays in the same unit where the family initially received certificate or voucher assistance for occupancy of the unit before the effective date of this rule. The maximum initial rent burden requirement is applicable each time a participant moves to a new unit. (Section 8(o)(3) of the USH Act, 42 U.S.C. 1437f(o)(3); § 982.508.)

4. *Income limits.* Eligibility is limited to a:

a. Very low-income family;

b. Low-income family continuously assisted under the public housing, Section 23, or Section 8 programs;

c. Low-income family that is a nonpurchasing tenant in certain homeownership programs;

d. Low-income or moderate-income family that is displaced as a result of the prepayment of the mortgage or voluntary termination of an insurance contract on eligible low-income housing as defined at 24 CFR 248.101; or

e. Low-income family that meets PHA-specified criteria. (Section 8(o)(4) of the USH Act, 42 U.S.C. 1437f(o)(4); § 982.201(a)(1) of the regulations.)

5. *Applicant selection.* PHA applicant selection preferences must be based on local housing needs and priorities. In determining the preferences, the PHA must use ''generally accepted data sources'' including public comments on the PHA plan and the Consolidated Plan. PHAs are urged to consider adopting admission preferences for victims of domestic violence (Section 8(o)(6)(A) of the USH Act, 42 U.S.C. 1437f(o)(6)(A); § 982.208).

6. *Optional PHA screening of applicants.* Although the screening and selection of tenants will remain the function of the owner, the PHA may elect to screen applicants in accordance with any HUD requirements (Section

8(o)(6)(B) of the USH Act, 42 U.S.C. 1437f(o)(6)(B); § 982.307(a)(1)).

7. *Optional PHA disapproval of owners.* The PHA may refuse to enter into new Section 8 Housing Assistance Payment (HAP) contracts with owners who refuse (or have a history of refusing) to evict families for drug-related or violent criminal activity, or for activity that threatens the health, safety or right of peaceful enjoyment of the (1) premises by tenants, PHA employees or owner employees, or (2) the residences by neighbors (Section 8(o)(6)(C) of the USH Act, 42 U.S.C. 1437f(o)(6)(C); § 982.306(c)(5)).

8. *Initial lease term.* The PHA may approve an initial lease term of less than 1 year if a lease of less than 1 year is prevailing local practice and the PHA determines that the shorter term will improve housing opportunities for the family (Section 8(o)(7)(A) of the USH Act, 42 U.S.C. 1437f(o)(7)(A); § 982.309(a)).

9. *Lease form and content.* The lease form must be in the standard form used in the locality by the owner. The lease must contain terms that are consistent with State and local law, and that apply generally to unassisted tenants in the same property. The HAP contract and the lease must contain the HUD prescribed tenancy addendum (Section 8(o)(7)(B) and (F) of the USH Act, 42 U.S.C. 1437f(o)(7)(B) and (F); § 982.308).

10. *HQS.* Units must pass the federally established HQS or substitute local housing codes or codes adopted by PHAs. Substitute local housing codes or codes adopted by PHAs: (a) cannot severely restrict housing choice; and (b) must meet or exceed the HQS (unless HUD approves a lower standard that does not adversely affect the health or safety of families, and will significantly increase affordable housing access and expand housing opportunities) (Section 8(o)(8)(B) of the USH Act, 42 U.S.C. 1437f(o)(8)(B); § 982.401(a)(4)).

11. *Fifteen calendar day initial HQS inspection deadline.* PHAs with 1,250 or fewer tenant-based Section 8 units must conduct initial HQS inspections within 15 days after receipt of an inspection request from the family and owner. PHAs with more than 1,250 tenant-based Section 8 units must conduct initial HQS inspections within a ''reasonable period'' of the family's and owner's inspection request (Section 8(o)(8)(C) of the USH Act, 42 U.S.C. 1437f(o)(8)(C); § 982.305(b)(2)).

12. *PHA penalties for late payment of housing assistance to owners.* In the future, the HAP contract will provide for penalties against the PHA for late payment of the housing assistance payment to the owner. Any late payment penalties may only be imposed in accordance with generally accepted practices in the local housing market governing penalties for late payment of rent by a tenant. For example, the PHA may be required to pay a late fee to an owner if the housing assistance payment is not paid by the tenth day of the month if it is local practice that an unassisted tenant is charged a late fee when the rent has not been paid in full by the tenth day of each month. A late payment fee may only be paid from the PHA's administrative fee income (including available amounts in the HA administrative fee reserve). The PHA is not obligated to pay any late fee if HUD determines that the late payment is due to factors beyond the control of the PHA (e.g., late receipt of the Section 8 funds from Treasury). The rule also provides that the PHA may add HAP contract provisions which define when the HAP payment by the PHA is deemed received by the owner (e.g., upon mailing by the PHA or actual receipt by the owner). (Section 8(o)(10)(D) and (E) of the USH Act, 42 U.S.C. 1437f(o)(10)(D) and (E); § 982.451(b)(5).)

13. *HQS inspections and rent reasonableness determinations for PHA-owned units.* The local government or another independent entity approved by HUD must conduct HQS inspections and rent reasonableness determinations for PHA-owned units leased by voucher holders. The PHA must pay any expenses associated with the performance of such inspections and rent determinations. The PHA and the independent agency may not charge the family any fee or charge for the services provided by the independent agency. The HA may use administrative fee income to compensate the independent agency for its services, but may not use other program receipts for this purpose (Section 8(o)(11) of the USH Act, 42 U.S.C. 1437f(o)(11); § 982.352(b)).

14. *Subsidy amount for manufactured homeowners leasing pads.* The subsidy amount for expenses associated with pad leasing by a mobile home owner are revised to mirror the subsidy calculation method for families leasing ''regular'' units (Section 8(o)(12) of the USH Act, 42 U.S.C. 1437f(o)(12); § 982.623).

15. *Income Targeting.* Not less than 75% of new admissions to the tenant-based voucher assistance program must have incomes at or below 30% of the area median income. Other admissions generally must be at or below 80% of the area median. If two or more PHAs have identical jurisdiction, those PHAs must jointly meet the targeting goals (section 513 of the 1998 Act; § 982.201(a)(2) of the regulations).

16. *Section 8 PHA definition.* For the administration of tenant-based assistance only, a ''PHA'' includes:

a. A consortia of PHAs,

b. A nonprofit entity administering certificates or vouchers under a contract with a PHA or HUD on enactment of the 1998 Act (on October 21, 1998); or

c. For any area outside the jurisdiction of a PHA that is administering a tenant-based program, or where HUD determines that such PHA is not administering the program effectively, a private non-profit entity or public body that would otherwise lack jurisdiction to administer the program in such area (section 546 of the 1998 Act; definition of ''public housing agency'' at § 982.4 of the regulations).

17. *Section 8 ''endless lease'' and owner termination notices.* The ''endless lease'' provision and the 90-day owner termination notice are permanently repealed (section 549 of the 1998 Act; revisions to §§ 982.310 and 982.454).

18. *Technical and conforming amendments including elimination of Section 8 SRO approvals.* The requirements for a HUD determination of a significant demand for SROs, PHA and local government approval of SRO use, and a PHA and local government certification that the SRO meets local SRO health and safety standards have been eliminated (section 550 of the 1998 Act; revisions to § 982.602).

19. *Portability.* The 1998 Act grants the statutory right of nationwide participant portability to the jurisdiction of any PHA that is administering the Section 8 voucher program. This right was previously established by HUD's program regulation. PHAs may opt to require applicants who were nonresidents at the time of application to live in the PHA's jurisdiction during the first year. PHAs must not issue a participant a new voucher for a portable move if the family has moved out of the family's unit in violation of the lease (section 553 of the 1998 Act; § 982.353).

20. *Elimination of ''take-one, take-all'' provision.* The ''take-one, take-all'' provision is permanently eliminated. This provision required that an owner who entered into a Section 8 HAP contract on behalf of any tenant in a multifamily housing project could not refuse to lease otherwise affordable units in all multifamily projects of the owner if the reason for the refusal was that the family was a certificate or voucher holder (section 554 of the 1998 Act permanently repeals Section 8(t) of the USH Act, 42 U.S.C. 1437f(t); this rule therefore removes the regulatory provision (prior § 982.457) that recited the prior take-one-take-all statutory requirement).

21. *Intellectual property rights.* The 1998 Act prohibits use of program receipts to indemnify PHA contractors or subcontractors against costs associated with any judgment of infringement of intellectual property rights (section 510 of the 1998 Act; § 982.157).

B. Transition to the New Housing Choice Voucher Program

The majority of changes necessary to merge the certificate and voucher programs into a single tenant-based program were accomplished by issuing the Section 8 certificate and voucher conforming rule published in three phases: in 1994, 1995, and 1998. The remaining significant differences between the certificate and voucher programs are the subsidy amount, the maximum allowable initial contract rent levels and contract rent adjustments. The treatment of these program differences in the transition of pre-merger certificates and pre-merger vouchers to the final merger of the two programs, as enacted by Congress, is addressed below.

1. *Requirement to only enter HAP contracts under the Housing Choice Voucher Program in the future, and treatment of outstanding pre-merger certificates.* The new regulation becomes effective 90 days from publication of this rule. This date is called the ''merger date'' (§ 982.4).

This rule provides that on and after the merger date, a PHA may only enter HAP contracts under the Housing Choice Voucher Program implemented by this rule. If an applicant family or a participant wishing to move has been issued a pre-merger certificate, the PHA may opt to: (a) let the family continue to search for housing during the term of the pre-merger certificate; or (b) issue the family a voucher under the Housing Choice Voucher Program for a new term.

In any event, the PHA may only enter into HAP contracts under the Housing Choice Voucher Program on and after the merger date. Thus, an applicant or participant family who received a pre-merger certificate must be assisted under the Housing Choice Voucher Program if a tenant-based HAP contract has not been executed on their behalf prior to the merger date.

2. *Treatment of pre-merger voucher assistance under the Housing Choice Voucher Program.* On the merger date, participants in the pre-merger voucher program automatically become participants in the Housing Choice Voucher Program. Existing voucher contracts provide that the housing assistance payment must be calculated in accordance with HUD requirements. However, the HAP contracts do not specify the amount of or method of computing the housing assistance payment.

In accordance with § 982.502 of the interim rule, the method of calculating subsidy under the Housing Choice Voucher Program is applied commencing at the effective date of the second regular reexamination of family income and composition on or after the merger date. Thus, a family receiving a shopping incentive under the pre-merger voucher program will continue to receive any shopping incentive for the pre-merger unit until the family's second regular reexamination on or after the merger date. However, execution of a Housing Choice Voucher Program HAP contract may be deferred until the next time a HAP contract would otherwise be executed in accordance with program requirements.

3. *Conversion of pre-merger over-FMR certificates to vouchers under the Housing Choice Voucher Program.* On the merger date, over-FMR tenancy participants in the pre-merger certificate program automatically become participants in the Housing Choice Voucher Program. Existing HAP contracts for an over-FMR tenancy provide that the housing assistance payment must be calculated in accordance with HUD requirements. However, the HAP contracts do not specify the amount of or method of computing the housing assistance payment. Consistent with § 982.502 of this interim rule, the new method of calculating subsidy under the Housing Choice Voucher Program is applied commencing at the effective date of the second regular reexamination of family income and composition on or after the merger date.

Conversion of an over-FMR tenancy certificate unit to the Housing Choice Voucher Program is not dependent upon execution of a Housing Choice Voucher Program HAP contract. Execution of a Housing Choice Voucher Program HAP contract may be deferred until the next time a HAP contract would otherwise be executed in accordance with program requirements.

4. *Conversion of pre-merger regular tenancy certificate assistance to voucher assistance under the Housing Choice Voucher Program.* A regular tenancy certificate participant will automatically become a participant in the Housing Choice Voucher Program when the PHA executes a new HAP contract on their behalf on or after the merger date—whether for the same unit or for a new unit. The PHA must terminate assistance under any outstanding regular certificate HAP contract (entered before the merger date) at the effective date of the second regular reexamination of family income and composition on or after the merger date.

All existing certificate tenancies must be converted to the Housing Choice Voucher Program (§ 982.502(d)). However, until conversion there is no change in pre-merger certificate program requirements for calculation of housing assistance payments, including annual adjustments and special adjustments to the contract rent (§§ 982.507, 509, and 510 of the pre-merger regulations which are renumbered as §§ 982.518, 982.519, and 982.520 in the Housing Choice Voucher Program regulations).

II. Section 8 Tenant-Based Program Statutory Provisions Not Included in This Rule

This interim rule does not include every statutory change affecting the Section 8 tenant-based programs. A listing of the implementation method for tenant-based statutory provisions not included in this rule follows.

A. Part 5 and Part 984 Regulations Being Published Separately

Other provisions of the 1998 Act affecting the Section 8 certificate and voucher programs are being addressed in a separate proposed rule amending 24 CFRs parts 5 and 984. This rule was published in the **Federal Register** on April 30, 1999 (64 FR 23460) and includes the following provisions: the minimum rent requirements (section 507 of the 1998 Act); elimination of federal preferences (section 514 of the 1998 Act); income targeting requirements (section 513 of the 1998 Act); elimination of Section 8 selection preference for public housing residents based on prior federal preference status (section 514 of the 1998 Act); elimination of the admission preference for elderly, disabled and displaced persons before other single persons (section 506(2)(A) of the 1998 Act); computer matching income verification information requirements (Section 8(o)(5)(A) of the USH Act, 42 U.S.C. 1437f(o)(5)(A)); revisions to the definitions of annual income and adjusted income (section 508 of the 1998 Act); revision to the minimum FSS program size (section 509 of the 1998 Act); and tenant rent welfare sanctions (section 512 of the 1998 Act). Further, the regulatory conforming changes to reflect the statutory revisions to restrictions on assistance to noncitizens (section 592 of the 1998 Act) are being addressed in a separate final rule.

B. Section 8 Tenant-Based Homeownership Program

Sections 545 and 555 of the 1998 Act provide that PHAs may opt to implement a Section 8 tenant-based homeownership program. HUD is issuing a separate proposed rule to implement the Section 8 tenant-based homeownership program. The homeownership proposed rule was published in the **Federal Register** on April 30, 1999 (64 FR 23488).

C. Section 8 Tenant-Based Renewal Funds

Section 556 of the 1998 Act requires HUD to establish the renewal funding process for tenant-based assistance in a regulation. Beginning October 1, 1998, HUD must renew expiring tenant-based Annual Contributions Contracts (ACCs) by applying a localized inflation factor to an allocation baseline that includes, at a minimum, ''amounts sufficient to ensure continued assistance for the actual number of families assisted on October 1, 1997, with appropriate upward adjustments for incremental assistance and additional families authorized subsequent to that date.'' HUD notice PIH 98–65 dated December 30, 1998 outlines the tenant-based renewal funding allocation policies for federal fiscal year 1999 assistance used to renew funding increments expiring between January 1, 1999 and December 31, 1999. Calendar year 2000 funding for the renewal of Section 8 certificate and voucher ACCs will be allocated pursuant to a negotiated final rule which will be published on or before October 21, 1999.

D. PHA Plan

The PHA Plan interim rule (section 511 of the 1998 Act) was published in the **Federal Register** on February 18, 1999 (64 FR 8170).

E. Project-Based Vouchers

Revisions to the rules for the project-based voucher/certificate program will be implemented in a future rulemaking (Section 8(o)(13) of the USH Act).

F. PHA Access to Criminal Conviction Records and Crime and Alcohol Abuse Provisions

PHA access to criminal conviction records for Section 8 applicants and tenants (section 575 of the 1998 Act) and other crime and alcohol abuse provisions will be implemented through future rulemaking or guidance.

G. Other Miscellaneous Statutory Provisions

Initial guidance on the 1998 Act provisions that are already effective was provided in notices published in the **Federal Register** on February 18, 1999 (64 FR 8192) and April 30, 1999 (64 FR 23344). HUD will continue to provide regulatory and other guidance, as appropriate, for all remaining provisions of the 1998 Act.

III. Public Participation in This Rulemaking

HUD is issuing this interim rule under the statutory authority provided by section 559 of the 1998 Act. Section 559 provides that the Secretary of HUD ''shall issue such interim regulations as may be necessary to implement the amendments made by [the 1998 Act] which relate to Section 8(o) of the [USH Act].'' Section 559 also requires that before the final rule is published, HUD will seek the recommendations on the implementation of the new Housing Choice Voucher Program from organizations representing: (1) State or local PHAs; (2) Owners and managers of tenant-based housing assistance under Section 8 of the USH Act; and (3) legal services organizations. Section 559 also requires HUD to convene not less than two public forums at which the persons or organizations making recommendations may express their views concerning the proposed disposition of their recommendations. The dates, times and locations of the first two public forums were announced in the **Federal Register** on April 27, 1999 (64 FR 22550).

In addition to the general solicitation of public comments on this interim rule, HUD specifically seeks through this rulemaking recommendations on implementation of the Housing Choice Voucher Program from the four groups mentioned above: (1) State or local PHAs; (2) Owners and managers of tenant-based housing assistance under section 8 of the USH Act; (3) families receiving tenant-based assistance under section 8 of the USH Act; and (4) legal services organizations.

IV. Justification for Interim Rulemaking

HUD generally publishes a rule for public comment before issuing a rule for effect, in accordance with its own regulations on rulemaking in 24 CFR part 10. Part 10, however, provides that prior notice and public comment may be omitted if ''a statute expressly so authorizes'' (24 CFR 10.1). This interim rule implements those provisions of the 1998 Act which complete the merger of the Section 8 certificate and voucher programs into a single new Section 8 voucher program (authorized under Section 8(o) of the USH Act, 42 U.S.C. 1437f(o)), entitled the Housing Choice Voucher Program. As noted above, section 559 of the 1998 Act provides that the Secretary of HUD ''shall issue such interim regulations as may be necessary to implement the amendments made by [the 1998 Act] which relate to Section 8(o) of the [USH Act].'' Accordingly, HUD is issuing this interim rule for effect without prior notice and comment.

HUD recognizes the value and necessity of public comment in the development of its regulations. HUD has therefore issued these regulations on an interim basis and has provided the public with a 60-day comment period. Additionally, HUD has provided for a 90-day delayed effective date for this interim rule (in contrast to the customary 30-day delayed effective date for most HUD rules), in order to afford PHAs additional time to prepare for the implementation of the interim rule. Further, HUD has scheduled three public forums to discuss implementation of the Housing Choice Voucher Program. HUD welcomes comment on the regulatory amendments made by this interim rule. Public comments will be addressed in the final rule.

V. Findings and Certifications

Paperwork Reduction Act

(a) The proposed information collection requirements contained in this rule have been submitted to the Office of Management and Budget (OMB) for review, under section 3507(d) of the Paperwork Reduction Act of 1995 (44 U.S.C. Chapter 35). An agency may not conduct or sponsor, and a person is not required to respond to, a collection of information unless the collection displays a valid control number.

(b) In accordance with 5 CFR 1320.5(a)(1)(iv), HUD estimates that the total reporting and recordkeeping burden that will result from the proposed collection of information as follows:

BILLING CODE 4210–32–P

Section 8 Merger Rule

Description	Number of respondents	Responses per respondent	Total annual responses	Hours per response	Total hours	Regulatory reference
Application forms HUD-52515	1,000	1	1,000	1.00	1,000	982.54 982.102 982.158
Tenant-furnished utilities HUD-52667	1,500	1	1,500	1.50	2,250	982.158 982.517
Inspection form						982.158
HUD-52580	2,500	300	750,000	0.50	375,000	982.401
HUD-52580A	2,500	300	750,000	0.25	187,500	982.405
Financial forms HUD-52595; 52663; 52672; 52673; 52681	2,500	5	12,500	1.50	18,750	982.157 982.158
Request for lease approval HUD-52517A	205,000	1	205,000	.08	16,400	982.158 982.302
Voucher HUD-52646	2,500	100	250,000	.05	12,550	982.158 982.305
Elevated Blood Level (EBL) Match	2,500	1	2,500	.25	625	982.158 982.401(j)
HA Information to Owner	2,500	60	205,000	.05	10,250	982.307
Portability Information HUD-52665	2,500	20	50,000	.50	25,000	982.158 982.355

Description	Number of respondents	Responses per respondent	Total annual responses	Hours per response	Total hours	Regulatory reference
Program Utilization Report HUD-52683	2,500	2	5,000	.33	1,650	982.158

Total number of respondents (2500 HAs + 205,000 families + 100,000 tenant-based owners) = 307,500 respondents

Total annual responses..... 2,232,500

Total burden hours.....650,975

(c) In accordance with 5 CFR 1320.8(d)(1), the Department is soliciting comments from members of the public and affected agencies concerning the proposed collection of information to:

(1) Evaluate whether the proposed collection of information is necessary for the proper performance of the functions of the agency, including whether the information will have practical utility;

(2) Evaluate the accuracy of the agency's estimate of the burden of the proposed collection of information;

(3) Enhance the quality, utility, and clarity of the information to be collected; and

(4) Minimize the burden of the collection of information on those who are to respond; including through the use of appropriate automated collection techniques or other forms of information technology, e.g., permitting electronic submission of responses.

Interested persons are invited to submit comments regarding the information collection requirements in this proposal. Under the provisions of 5 CFR part 1320, OMB is required to make a decision concerning this collection of information between 30 and 60 days after today's publication date. Therefore, a comment on the information collection requirements is best assured of having its full effect if OMB receives the comment within 30 days of today's publication. This time frame does not affect the deadline for comments to the agency on the interim rule, however. Comments must refer to the rule by name and docket number (FR–4428) and must be sent to:

Joseph F. Lackey, Jr., HUD Desk Officer, Office of Management and Budget, New Executive Office Building, Washington, DC 20503

and

Gerald J. Benoit, Office of Public and Indian Housing, Department of Housing and Urban Development, Room 4210, 451 Seventh Street, SW, Washington, DC 20410

Environmental Impact

A Finding of No Significant Impact with respect to the environment was made in accordance with HUD regulations in 24 CFR part 50 that implement section 102(2)(C) of the National Environmental Policy Act of 1969 (42 U.S.C. 4223). The Finding is available for public inspection between 7:30 a.m. and 5:30 p.m. weekdays in the Office of the Rules Docket Clerk, Office of General Counsel, Room 10276, Department of Housing and Urban Development, 451 Seventh Street, SW, Washington, DC.

Unfunded Mandates Reform Act

Title II of the Unfunded Mandates Reform Act of 1995 (2 U.S.C. 1531–1538) establishes requirements for Federal agencies to assess the effects of their regulatory actions on State, local, and tribal governments and the private sector. This interim rule does not impose any Federal mandates on any State, local, or tribal governments or the private sector within the meaning of Unfunded Mandates Reform Act of 1995.

Executive Order 12866

The Office of Management and Budget (OMB) reviewed this interim rule under Executive Order 12866, *Regulatory Planning and Review*. OMB determined that this interim rule is a ''significant regulatory action,'' as defined in section 3(f) of the Order (although not economically significant, as provided in section 3(f)(1) of the Order). Any changes made to the interim rule subsequent to its submission to OMB are identified in the docket file, which is available for public inspection in the office of the Department's Rules Docket Clerk, Room 10276, 451 Seventh Street, SW, Washington, DC 20410–0500.

Impact on Small Entities

The Secretary, in accordance with the Regulatory Flexibility Act (5 U.S.C. 605(b)) (the RFA), has reviewed and approved this interim rule and in so doing certifies that this rule would not have a significant economic impact on a substantial number of small entities. The reasons for HUD's determination are as follows:

(1) *A Substantial Number of Small Entities Will Not be Affected.* The interim rule is exclusively concerned with public housing agencies that administer tenant-based housing assistance under Section 8 of the United States Housing Act of 1937. Specifically, the interim rule would establish requirements governing tenant-based assistance for an eligible family. Under the definition of ''Small governmental jurisdiction'' in section 601(5) of the RFA, the provisions of the RFA are applicable only to those few public housing agencies that are part of a political jurisdiction with a population of under 50,000 persons. The number of entities potentially affected by this rule is therefore not substantial.

(2) *No Significant Economic Impact.* The interim regulatory amendments would not change the amount of funding available under the Section 8 voucher program. Accordingly, the economic impact of this rule will not be significant, and it will not affect a substantial number of small entities.

Notwithstanding HUD's determination that this rule will not have a significant economic effect on a substantial number of small entities, HUD specifically invites comments regarding any less burdensome alternatives to this rule that will meet HUD's objectives as described in this preamble.

Executive Order 12612, Federalism

The General Counsel, as the Designated Official for HUD under section 6(a) of Executive Order 12612, *Federalism*, has determined that this rule will not have federalism implications concerning the division of local, State, and Federal responsibilities. No programmatic or policy change under this rule will affect the relationship between the Federal government and State and local governments.

Catalog of Domestic Assistance Numbers

The Catalog of Domestic Assistance numbers for the programs affected by this interim rule are 14.146, 14.147, 14.850, 14.851, 14.852, 14.855, 14.857, and 15.141.

List of Subjects

24 CFR Part 248

Intergovernmental relations, Loan programs—housing and community development, Low and moderate income housing, Mortgage insurance, Reporting and recordkeeping requirements.

24 CFR Part 791

Grant programs—housing and community development, Housing, Rent subsidies.

24 CFR Part 792

Fraud, Grant programs—housing and community development, Rent subsidies, Reporting and recordkeeping requirements.

24 CFR Part 982

Grant programs—housing and community development, Housing, Rent subsidies.

For the reasons discussed in the preamble, HUD amends 24 CFR parts 248, 791, 792, and 982 as follows:

PART 248—PREPAYMENT OF LOW INCOME HOUSING MORTGAGES

1. The authority citation for part 248 continues to read as follows:

Authority: 12 U.S.C. 1715l note, 4101 note, and 4101–4124; 42 U.S.C. 3535(d).

§ 248.101 [Amended]

2. Amend § 248.101 as follows:

a. In the definition of ''Adjusted income'' revise the references to ''§ 813.106'' and ''§ 813.102'' to read ''part 5''.

b. In the definition of ''Fair market rent'', revise the reference to ''§ 882.102'' to read ''§ 982.4''; and

c. In the definition of ''Low Income Families'', revise the reference to ''part 813'' to read ''part 5''.

d. In the definition of ''Section 8 assistance'', after the words ''880 through 887'', add the words ''and 982 and 983''.

e. In the definition of ''Special Needs Tenants'' revise the reference to ''§ 812.2'' to read ''part 5''.

f. In the definition of ''Very Low Income Families'', revise the reference to ''§ 813.102'' to ''part 5''.

§ 248.141 [Amended]

3. Amend § 248.141(c)(3) by removing the reference to ''certificate and''.

§ 248.147 [Amended]

4. In § 248.147(e)(1), revise the references to ''parts 882 and 887'' in the first and second sentences to read in each place ''part 982''.

5. Amend § 248.165 as follows:

a. Revise paragraph (a) as set forth below; and

b. In paragraph (i), revise the reference to ''assistance under parts 882 or 887 of this title'' to read ''tenant-based assistance under the Housing Choice Voucher Program''.

§ 248.165 Assistance for displaced tenants.

(a) *Section 8 assistance.* Each low income family that is displaced as a result of the prepayment of the mortgage, or voluntary termination of an insurance contract, on eligible low income housing shall, subject to the availability of funds, be offered the opportunity to receive tenant-based assistance under the Housing Choice Voucher Program in accordance with part 982 of this title.

* * * * *

6. Revise § 248.173(m)(2) to read as follows:

§ 248.173 Resident homeownership program.

* * * * *

(m) * * *

(2) *Section 8 assistance.* If a tenant decides not to purchase a unit, or is not qualified to do so, the Commissioner shall ensure that tenant-based assistance under the Housing Choice Voucher Program in accordance with part 982 of this title is available for use in that or another property by each tenant that meets the eligibility requirements thereunder.

* * * * *

§ 248.201 [Amended]

7. Amend § 248.201 as follows:

a. In the definition of ''*Low-income Families*'', revise the reference to ''part 813'' to read ''part 5'';

b. In the definition of ''*Very Low Income Families*'', revise the reference to ''under § 813.102 of this title'' to read ''under section 3(b) of the 1937 Act (42 U.S.C. 1437a(b))''.

PART 791—ALLOCATIONS OF HOUSING ASSISTANCE FUNDS

8. Revise the heading of part 791 to read as set forth above.

9. The authority citation for part 791 continues to read as follows:

Authority: 42 U.S.C. 1439 and 3535(d).

10. Revise § 791.101 to read as follows:

§ 791.101 Applicability and scope.

This part describes the role and responsibility of HUD in allocation of budget authority (pursuant to section 213 of the Housing and Community Development Act of 1974 (42 U.S.C. 1439)) for housing assistance under the United States Housing Act of 1937 (Section 8 and public housing) and under section 101 of the Housing and Urban Development Act of 1965 (12 U.S.C. 1701s), and of budget authority for housing assistance under section 202 of the Housing Act of 1959 (12 U.S.C. 1710q). This part does not apply to budget authority for the public housing operating fund or capital fund.

11. Amend § 791.102 as follows:

a. Remove the definitions of ''*Application for housing assistance*'', ''*Chief executive officer*'', ''*Household type*'', ''*Housing type*'', ''*Local government*'', ''*Tenure type*'', and ''*Urban county*'';

b. Amend the definition of ''*Allocation area*'' by removing the reference to ''or Indian areas''; and

c. Revise the definition of ''*Public housing agency*'' as set forth below.

§ 791.102 Definitions.

* * * * *

Public housing agency (PHA). (1) Any State, county, municipality, or other governmental entity or public body which is authorized to administer a program under the 1937 Act (or an agency or instrumentality of such an entity).

(2) In addition, for purposes of the program of Section 8 tenant-based assistance under part 982 of this title, the term PHA also includes any of the following:

(i) A consortia of housing agencies, each of which meets the qualifications in paragraph (1) of this definition, that HUD determines has the capacity and capability to efficiently administer the program (in which case, HUD may enter into a consolidated ACC with any legal entity authorized to act as the legal representative of the consortia members);

(ii) Any other public or private non-profit entity that was administering a Section 8 tenant-based assistance program pursuant to a contract with the contract administrator of such program (HUD or a PHA) in effect on October 21, 1998; or

(iii) For any area outside the jurisdiction of a PHA that is administering a tenant-based program, or where HUD determines that such PHA is not administering the program effectively, a private non-profit entity or a governmental entity or public body that would otherwise lack jurisdiction to administer the program in such area.

Subpart C—[Removed and Reserved]

12. Remove and reserve subpart C.

§ 791.401 [Amended]

13. In § 791.401, revise the reference to ''§ 791.101(a)'' to read ''§ 791.101''.

14. Amend § 791.402 as follows:

a. Remove paragraph (c)(2) and redesignate paragraph (c)(1) as paragraph (c); and

b. Revise paragraph (d) as set forth below.

§ 791.402 Determination of low-income housing needs.

* * * * *

(d) Based on the criteria in paragraphs (b) and (c) of this section, the Assistant Secretary for Policy Development and Research shall establish housing needs factors for each county and independent city in the field office jurisdiction, and shall aggregate the factors for such jurisdiction. The field office total for each factor is then divided by the respective national total for that factor. The resulting housing needs ratios under paragraph (b) of this section are then weighted to provide housing needs percentages for each field office, using the following weights: population—20 percent; poverty—20 percent; housing overcrowding—10 percent; housing vacancies—10 percent; substandard housing—20 percent; other objectively measurable conditions—20 percent. For the section 202 elderly program, the two criteria described in paragraph (c) of this section are weighted equally.

* * * * *

15. Amend § 791.403 to revise paragraphs (a) and (b)(1)(i) to read as follows:

§ 791.403 Allocation of housing assistance.

(a) The total budget authority available for any fiscal year shall be determined by adding any available unreserved budget authority from prior fiscal years to any newly appropriated budget authority for each housing program.

(b) * * *

(1) * * *

(i) Amendments of existing contracts, renewal of assistance contracts, assistance to families that would otherwise lose assistance due to the decision of the project owner to prepay the project mortgage or not to renew the assistance contract, assistance to prevent displacement or to provide replacement housing in connection with the demolition or disposition of public housing, assistance in support of the property disposition and loan management functions of the Secretary;

* * * * *

16. Revise § 791.404(c) to read as follows:

§ 791.404 Field Office allocation planning.

* * * * *

(c) *Determining the amount of budget authority.* Where the field office establishes more than one allocation area, it shall determine the amount of budget authority to be allocated to each allocation area, based upon a housing needs percentage which represents the needs of that area relative to the field office jurisdiction. For each program, a composite housing needs percentage developed under § 791.402 for those counties and independent cities comprising the allocation area shall be aggregated into allocation area totals.

* * * * *

PART 792—PUBLIC HOUSING AGENCY SECTION 8 FRAUD RECOVERIES

17. Revise the heading of part 792 to read as set forth above.

18. The authority citation for 24 CFR part 792 continues to read as follows:

Authority: 42 U.S.C. 1437f note and 3535(d).

PART 792—[AMENDED]

19. In part 792, revise all references to ''HA'' to read ''PHA''.

20. Revise § 792.101 to read as follows:

§ 792.101 Purpose.

The purpose of this part is to encourage public housing agencies (PHAs) to investigate and pursue instances of tenant and owner fraud and abuse in the operation of the Section 8 housing assistance payments programs.

§ 792.102 [Amended]

21. Amend § 792.102 as follows:

a. In paragraphs (a) and (b), revise the reference to ''an HA'' to read ''a PHA''.

b. In paragraph (b), revise the reference to ''§ 882.216 or 887.405'' to read ''§ 982.555 of this title''.

22. Amend § 792.103 as follows:

a. Remove the definition of ''HA (Housing Agency)'';

b. Add the definition of ''Public housing agency (PHA)'' in alphabetical order as set forth below; and

c. In the definition of ''Repayment agreement'', revise the reference to ''an HA'' to read ''a PHA''.

§ 792.103 Definitions.

* * * * *

Public housing agency (PHA). A public housing agency as defined in § 791.102.

* * * * *

§ 792.202 [Amended]

23. In § 792.202(a)(1) and (a)(2), revise the reference to ''§ 882.216 or 887.405'' to read ''§ 982.555 of this title''.

PART 982—SECTION 8 TENANT BASED ASSISTANCE: HOUSING CHOICE VOUCHER PROGRAM

24. Revise the heading of part 982 to read as set forth above.

25. The authority citation for part 982 continues to read as follows:

Authority: 42 U.S.C. 1437f and 3535(d).

PART 982—[AMENDED]

25a. In part 982, ''HA'' is removed and ''PHA'' is added in its place wherever it appears, and ''an HA'' is removed and ''a PHA'' is added in its place wherever it appears.

26. Amend § 982.1 as follows:

a. Revise the section heading;

b. Revise paragraphs (a)(1), (a)(2), and (a)(4);

c. Amend paragraph (a)(3) by removing the reference to ''and is not based on the actual rent of the leased unit'';

d. Amend paragraph (b)(1) by removing the reference to ''certificate or''; and

e. Revise paragraph (b)(2).

The revisions read as follows:

§ 982.1 Programs: Purpose and structure.

(a) *General description.* (1) In the HUD Housing Choice Voucher Program (Voucher Program) and the HUD certificate program, HUD pays rental subsidies so eligible families can afford decent, safe and sanitary housing. Both programs are generally administered by State or local governmental entities called public housing agencies (PHAs). HUD provides housing assistance funds to the PHA. HUD also provides funds for PHA administration of the programs. PHAs are no longer allowed to enter into contracts for assistance in the certificate program.

(2) Families select and rent units that meet program housing quality standards. If the PHA approves a family's unit and tenancy, the PHA contracts with the owner to make rent subsidy payments on behalf of the family. A PHA may not approve a tenancy unless the rents is reasonable.

* * * * *

(4)(i) In the certificate program, the subsidy for most families is the difference between the rent and 30 percent of adjusted monthly income.

(ii) In the voucher program, the subsidy is based on a local ''payment standard'' that reflects the cost to lease a unit in the local housing market. If the rent is less than the payment standard, the family generally pays 30 percent of adjusted monthly income for rent. If the rent is more than the payment standard, the family pays a larger share of the rent.

* * * * *

(b) * * *

(2) To receive tenant-based assistance, the family selects a suitable unit. After approving the tenancy, the PHA enters into a contract to make rental subsidy payments to the owner to subsidize occupancy by the family. The PHA contract with the owner only covers a single unit and a specific assisted family. If the family moves out of the leased unit, the contract with the owner terminates. The family may move to another unit with continued assistance so long as the family is complying with program requirements.

§ 982.2 [Amended]

27. In § 982.2(a), remove the word ''rental'' in both places it appears in the second sentence.

28. Amend § 982.4 as follows:

a. Amend paragraph (a)(2) by removing the reference to ''Housing agency (HA)'';

b. In paragraph (a)(4) revise the reference to ''utility allowance, and utility reimbursement'' to read ''utility allowance'';

c. Amend paragraph (b) by removing the definitions of ''Amortization payment'', ''Certificate'', ''Certificate or voucher holder'', ''Certificate program'',

''Contiguous MSA'', ''Contract authority'', ''Exception rent'', ''FMR/exception rent limit'', ''Lease addendum'', ''Over-FMR tenancy'', ''Regular tenancy'', ''Set-up charges'', ''Utility hook-up charge'', and ''Voucher program'';

d. Amend paragraph (b) by revising the definitions of ''Payment standard'', and ''Tenant rent'';

e. Amend paragraph (b) by removing the reference to ''certificate or'' from the definitions of the terms ''Receiving HA'' and ''Suspension''; and

f. Amend paragraph (b) by removing the phrase ''approval to lease a unit'' in the definition of ''Suspension'' and adding in its place ''approval of the tenancy''.

g. Amend paragraph (b) by adding, in alphabetical order, the definitions of the terms ''Merger date'', ''PHA plan'', ''Program'', ''Program receipts'', ''Public housing agency (PHA)'', ''Residency preference'', ''Residency preference area'', ''Tenant rent'', and ''Voucher holder''.

§ 982.4 Definitions.

* * * * *

(b) * * *

Merger date. August 12, 1999.

* * * * *

Payment standard. The maximum monthly assistance payment for a family assisted in the voucher program (before deducting the total tenant payment by the family).

PHA plan. The annual plan and the 5-year plan as adopted by the PHA and approved by HUD in accordance with part 903 of this chapter.

* * * * *

Program. The Section 8 tenant-based assistance program under this part.

Program receipts. HUD payments to the PHA under the consolidated ACC, and any other amounts received by the PHA in connection with the program.

Public housing agency (PHA). PHA includes both:

(1) Any State, county, municipality, or other governmental entity or public body which is authorized to administer the program (or an agency or instrumentality of such an entity), or

(2) Any of the following:

(i) A consortia of housing agencies, each of which meets the qualifications in paragraph (1) of this definition, that HUD determines has the capacity and capability to efficiently administer the program (in which case, HUD may enter into a consolidated ACC with any legal entity authorized to act as the legal representative of the consortia members);

(ii) Any other public or private non-profit entity that was administering a Section 8 tenant-based assistance program pursuant to a contract with the contract administrator of such program (HUD or a PHA) on October 21, 1998; or

(iii) For any area outside the jurisdiction of a PHA that is administering a tenant-based program, or where HUD determines that such PHA is not administering the program effectively, a private non-profit entity or a governmental entity or public body that would otherwise lack jurisdiction to administer the program in such area.

* * * * *

Residency preference. A PHA preference for admission of families that reside anywhere in a specified area, including families with a member who works or has been hired to work in the area (''residency preference area'').

Residency preference area. The specified area where families must reside to qualify for a residency preference.

* * * * *

Tenant rent. For a tenancy in the certificate program: The total tenant payment minus any utility allowance.

* * * * *

Voucher holder. A family holding a voucher with an unexpired term (search time).

* * * * *

29. Revise § 982.51(a) to read as follows:

§ 982.51 PHA authority to administer program.

(a) The PHA must have authority to administer the program. The PHA must provide evidence, satisfactory to HUD, of its status as a PHA, of its authority to administer the program, and of the PHA jurisdiction.

* * * * *

30. Amend § 982.53 by revising paragraphs (b) and (c) and adding paragraph (d) to read as follows:

§ 982.53 Equal opportunity requirements.

* * * * *

(b) *Civil rights certification.* The PHA must submit a signed certification to HUD that:

(1) The PHA will administer the program in conformity with the Fair Housing Act, Title VI of the Civil Rights Act of 1964, section 504 of the Rehabilitation Act of 1973, and Title II of the Americans with Disabilities Act.

(2) The PHA will affirmatively further fair housing in the administration of the program.

(c) *Obligation to affirmatively further fair housing.* The PHA shall be considered in compliance with the obligation to affirmatively further fair housing if the PHA examines its programs or proposed programs, identifies any impediments to fair housing choice within those programs, addresses those impediments in a reasonable fashion in view of the resources available, works with the local jurisdiction to implement any of the local government's initiatives to affirmatively further fair housing that require the PHA's involvement, and maintains records reflecting these analyses and actions.

(d) *State law.* Nothing in part 982 is intended to pre-empt operation of State laws that prohibit discrimination against a Section 8 voucher-holder because of status as a Section 8 voucher-holder. However, such State laws shall not change or affect any requirement of this part, or any other HUD requirements for administration or operation of the program.

31. Amend § 982.54 as follows:

a. Revise paragraphs (d)(1), (d)(2), (d)(14) and (d)(15);

b. Remove paragraph (d)(16);

c. Redesignate paragraphs (d)(17) through (d)(22) as paragraphs (d)(16) through (d)(21) respectively; and

d. Add new paragraph (d)(27).

The revisions and addition read as follows:

§ 982.54 Administrative plan.

* * * * *

(d) * * *

(1) Selection and admission of applicants from the PHA waiting list, including any PHA admission preferences, procedures for removing applicant names from the waiting list, and procedures for closing and reopening the PHA waiting list;

(2) Issuing or denying vouchers, including PHA policy governing the voucher term and any extensions or suspensions of the voucher term. ''Suspension'' means stopping the clock on the term of a family's voucher after the family submits a request for approval of the tenancy. If the PHA decides to allow extensions or suspensions of the voucher term, the PHA administrative plan must describe how the PHA determines whether to grant extensions or suspensions, and how the PHA determines the length of any extension or suspension;

* * * * *

(14) The process for establishing and revising voucher payment standards;

(15) The method of determining that rent to owner is a reasonable rent (initially and during the term of a HAP contract);

* * * * *

(22) Procedural guidelines and performance standards for conducting required HQS inspections.

32. In § 982.101, revise paragraph (a) and paragraph (b)(2)(i) to read as follows:

§ 982.101 Allocation of funding.

(a) *Allocation of funding.* HUD allocates available budget authority for the tenant-based assistance program to HUD field offices.

(b) * * *

(2) * * *

(i) Funding retained in a headquarters reserve for purposes specified by law;

* * * * *

33. Amend § 982.103 by revising paragraph (a) and adding paragraph (c) to read as follows:

§ 982.103 HUD review of application.

(a) *Competitive funding under NOFA.* For competitive funding under a NOFA, HUD must evaluate an application on the basis of the selection criteria stated in the NOFA, and must consider the PHA's capacity and capability to administer the program.

* * * * *

(c) *PHA disqualification.* HUD will not approve any PHA funding application (including an application for competitive funding under a NOFA) if HUD determines that the PHA is disbarred or otherwise disqualified from providing assistance under the program.

34. Amend § 982.151 as follows:

a. Amend paragraph (a)(1) by removing the reference to ''the maximum annual payment by HUD, and'';

b. In paragraph (a)(2), revise the reference to ''certificate program and voucher program'' to read ''tenant-based assistance program''; and

c. Revise paragraph (b) to read as follows:

§ 982.151 Annual contributions contract.

* * * * *

(b) *Budget authority.* (1) Budget authority is the maximum amount that may be paid by HUD to a PHA over the ACC term of a funding increment. Before adding a funding increment to the consolidated ACC for a PHA program, HUD reserves budget authority from amounts authorized and appropriated by the Congress for the program.

(2) For each funding increment, the ACC specifies the term over which HUD will make payments for the PHA program, and the amount of available budget authority for each funding increment. The amount to be paid to the PHA during each PHA fiscal year (including payment from the ACC reserve account described in § 982.154) must be approved by HUD.

35. Amend § 982.152 by revising paragraphs (a)(1), (b)(1) and (c) to read as follows:

§ 982.152 Administrative fee.

(a) *Purposes of administrative fee.* (1) HUD may approve administrative fees to the PHA for any of the following purposes:

(i) Ongoing administrative fee;

(ii) Costs to help families who experience difficulty finding or renting appropriate housing under the program;

(iii) The following types of extraordinary costs approved by HUD:

(A) Costs to cover necessary additional expenses incurred by the PHA to provide reasonable accommodation for persons with disabilities in accordance with part 8 of this title (e.g., additional counselling costs), where the PHA is unable to cover such additional expenses from ongoing administrative fee income or the PHA administrative fee reserve;

(B) Costs of audit by an independent public accountant;

(C) Other extraordinary costs determined necessary by HUD Headquarters;

(iv) Preliminary fee (in accordance with paragraph (c) of this section);

(v) Costs to coordinate supportive services for families participating in the family self-sufficiency (FSS) program.

* * * * *

(b) *Ongoing administrative fee.* (1) The PHA ongoing administrative fee is paid for each program unit under HAP contract on the first day of the month. The amount of the ongoing fee is determined by HUD in accordance with Section 8(q)(1) of the 1937 Act (42 U.S.C. 1437f(q)(1)).

* * * * *

(c) *Preliminary fee.* (1) If the PHA was not administering a program of Section 8 tenant-based assistance prior to the merger date, HUD will pay a one-time fee in the amount of $500 in the first year the PHA administers a program. The fee is paid for each new unit added to the PHA program by the initial funding increment under the consolidated ACC.

(2) The preliminary fee is used to cover expenses the PHA incurs to help families who inquire about or apply for the program, and to lease up new program units.

* * * * *

36. Revise § 982.154 to read as follows:

§ 982.154 ACC reserve account.

(a) HUD may establish and maintain an unfunded reserve account for the PHA program from available budget authority under the consolidated ACC. This reserve is called the ''ACC reserve account'' (formerly ''project reserve''). There is a single ACC reserve account for the PHA program.

(b) The amount in the ACC reserve account is determined by HUD. HUD may approve payments for the PHA program, in accordance with the PHA's HUD-approved budget, from available amounts in the ACC reserve account.

37. Amend § 982.155 by revising the introductory text of paragraph (a) to read as follows:

§ 982.155 Administrative fee reserve.

(a) The PHA must maintain an administrative fee reserve (formerly ''operating reserve'') for the program. There is a single administrative fee reserve for the PHA program. The PHA must credit to the administrative fee reserve the total of:

* * * * *

38. Amend § 982.157 as follows:

a. Revise paragraph (b)(1) introductory text as set forth below; and

b. Add paragraph (c).

§ 982.157 Budget and expenditures.

* * * * *

(b) *PHA use of program receipts.* (1) Program receipts must be used in accordance with the PHA's HUD-approved budget. Such program receipts may only be used for:

* * * * *

(c) *Intellectual property rights.* Program receipts may not be used to indemnify contractors or subcontractors of the PHA against costs associated with any judgment of infringement of intellectual property rights.

39. Revise § 982.162(a)(3) to read as follows:

§ 982.162 Use of HUD-required contracts and other forms.

(a) * * *

(3) The tenancy addendum required by HUD (which is included both in the HAP contract and in the lease between the owner and the tenant).

* * * * *

40. Amend § 982.201 as follows:

a. In paragraph (a), revise the reference to ''a program'' to read ''the program'';

b. Revise paragraphs (b) and (f)(2) as set forth below; and

c. Remove the reference to ''certificate or'' in paragraphs (d)(1), (d)(2) and (e).

§ 982.201 Eligibility.

* * * * *

(b) *Income.* (1) *Income-eligibility.* To be income-eligible, the applicant must

be a family in any of the following categories:

(i) A ''very low income'' family;

(ii) A low-income family that is ''continuously assisted'' under the 1937 Housing Act;

(iii) A low-income family that meets additional eligibility criteria specified in the PHA administrative plan. Such additional PHA criteria must be consistent with the PHA plan and with the consolidated plans for local governments in the PHA jurisdiction;

(iv) A low-income family that qualifies for voucher assistance as a non-purchasing family residing in a HOPE 1 (HOPE for public housing homeownership) or HOPE 2 (HOPE for homeownership of multifamily units) project. (Section 8(o)(4)(D) of the 1937 Act (42 U.S.C. 1437f(o)(4)(D));

(v) A low-income or moderate-income family that is displaced as a result of the prepayment of the mortgage or voluntary termination of an insurance contract on eligible low-income housing as defined in § 248.101 of this title;

(vi) A low-income family that qualifies for voucher assistance as a non-purchasing family residing in a project subject to a resident homeownership program under § 248.173 of this title.

(2) *Income-targeting.* (i) Not less than 75 percent of the families admitted to a PHA's tenant-based voucher program during the PHA fiscal year shall be targeted to families whose annual income does not exceed the following amounts as determined by HUD:

(A) 30 percent of the area median income, with adjustments for smaller and larger families; or

(B) A higher or lower percent of the area median income, if HUD determines that a higher or lower percent is necessary because of unusually high or low family incomes.

(ii) Conversion of assistance for a participant in the PHA certificate program to assistance in the PHA voucher program does not count as an ''admission,'' and is not subject to targeting under paragraph (b)(2)(i) of this section.

(iii) Admission of families as described in paragraphs (b)(1)(ii) or (b)(1)(v) of this section is not subject to targeting under paragraph (b)(2)(i) of this section.

(iv) If two or more PHAs that administer section 8 tenant-based assistance have an identical jurisdiction, such PHAs shall be treated as a single PHA for purposes of targeting under paragraph (b)(2)(i) of this section. In such a case, the PHAs shall cooperate to assure that aggregate admissions by such PHAs comply with the targeting requirement. If such PHAs do not have a single fiscal year, HUD will determine which PHA's fiscal year is used for this purpose.

(3) The annual income (gross income) of an applicant family is used both for determination of income-eligibility under paragraph (b)(1) of this section, and for targeting under paragraph (b)(2)(i) of this section.

(4) The applicable income limit for issuance of a voucher when a family is selected for the program is the highest income limit (for the family unit size) for areas in the PHA jurisdiction. The applicable income limit for admission to the program is the income limit for the area where the family is initially assisted in the program. The family may only use the voucher to rent a unit in an area where the family is income eligible at admission to the program.

* * * * *

(f) * * *

(2) For description of the grounds for denying assistance because of action or inaction by the applicant, see § 982.552(b) and (c) (requirement and authority to deny admission) and § 982.553(a) (crime by family members).

41. Amend § 982.202 as follows:

a. Remove paragraph (b)(1);

b. Redesignate paragraphs (b)(2), (b)(3), and (b)(4) as paragraphs (b)(1), (b)(2), and (b)(3), respectively; and

c. Revise the introductory text of the newly designated paragraph (b)(3) as set forth below; and

d. Revise paragraph (d) as set forth below.

§ 982.202 How applicants are selected: General requirements.

* * * * *

(b) * * *

(3) *Family characteristics.* The PHA preference system may provide a preference for admission of families with certain characteristics from the PHA waiting list. However, admission to the program may not be based on:

* * * * *

(d) *Admission policy.*

The PHA must admit applicants for participation in accordance with HUD regulations and other requirements, and with PHA policies stated in the PHA administrative plan and the PHA plan. The PHA admission policy must state the system of admission preferences that the PHA uses to select applicants from the waiting list, including any residency preference or other local preference.

§ 982.20 [Amended]

42. In § 982.203(b)(1), remove the words ''or Indian''.

43. In § 982.204, revise paragraph (b)(4), amend paragraph (b)(5) to remove the phrase ''ranking preference or'' and add a new paragraph (f) to read as follows:

§ 982.204 Waiting list: Administration of waiting list.

* * * * *

(b) * * *

(4) Qualification for any local preference;

* * * * *

(f) *Number of waiting lists.* A PHA must use a single waiting list for admission to its Section 8 tenant-based assistance program. However, the PHA may use a separate single waiting list for such admissions for a county or municipality.

§ 982.205 [Amended]

44. Amend § 982.205 as follows:

a. Remove paragraph (a);

b. Redesignate paragraphs (b) and (c) as paragraphs (a) and (b), respectively;

c. In newly designated paragraph (a)(2), revise all references to ''project-based certificate program'' to read ''project-based voucher program'', and remove all references to ''or Indian'';

d. In newly designated paragraph (b)(1), remove the reference to ''or Indian''; and

e. In newly designated paragraph (b)(3), revise the reference to ''paragraph (c)(2)'' to read ''paragraph (b)(2)'', and remove the reference to ''both the certificate program and''.

45. Amend § 982.206 as follows:

a. Revise paragraph (b)(2) as set forth below;

b. Remove paragraph (c)(2); and

c. Redesignate paragraph (c)(1) as paragraph (c).

§ 982.206 Waiting list: Opening and closing; Public notice.

* * * * *

(b) * * *

(2) If the waiting list is open, the PHA must accept applications from families for whom the list is open unless there is good cause for not accepting the application (such as denial of assistance because of action or inaction by members of the family) for the grounds stated in §§ 982.552 and 982.553.

* * * * *

46. Revise § 982.207 to read as follows:

§ 982.207 Waiting list: Local preferences in admission to program.

(a) *Establishment of PHA local preferences.* (1) The PHA may establish a system of local preferences for selection of families admitted to the program. PHA selection preferences must be described in the PHA administrative plan. The system of local

preferences must be consistent with the PHA plan (see part 903 of this title), and with the consolidated plans for local governments in the PHA jurisdiction.

(2) The PHA system of local preferences must be based on local housing needs and priorities, as determined by the PHA. In determining such needs and priorities, the PHA shall use generally accepted data sources. The PHA shall consider public comment on the proposed public housing agency plan (as received pursuant to § 903.17 of this chapter) and on the consolidated plan for the relevant jurisdiction (as received pursuant to part 91 of this title).

(3) The PHA may limit the number of applicants that may qualify for any local preference.

(b) *Residency preferences.* (1) If approved by HUD, the PHA may adopt a residency preference that establishes a county or municipality as a residency preference area. A PHA may not adopt a residency preference for an area smaller than a county or municipality.

(2) A residency preference must apply to families with a member who works or who has been hired to work anywhere in a residency preference area. In applying the residency preference, such families must be treated like families that reside in the residency preference area.

(3) A residency preference may not be based on how long the applicant has resided in or worked in the PHA jurisdiction or residency preference area.

(c) *Selection among families with preference.* The PHA system of preferences may use either of the following to select among applicants on the waiting list with the same preference status:

(1) Date and time of application; or

(2) A drawing or other random choice technique.

(d) *Preference for person with disabilities.* The PHA may give a preference for admission of families that include a person with disabilities. However, the PHA may not give a preference for admission of persons with a specific disability.

(e) *Verification of selection method.* The method for selecting applicants from a preference category must leave a clear audit trail that can be used to verify that each applicant has been selected in accordance with the method specified in the administrative plan.

47. Amend § 982.301 as follows:

a. In paragraph (b)(1), remove the reference to ''certificate or''; and

b. Revise paragraphs (b)(2), (b)(5) and (b)(6) as set forth below.

§ 982.301 Information when family is selected.

* * * * *

(b) * * *

(2) How the PHA determines the amount of the housing assistance payment for a family, including:

(i) How the PHA determines the payment standard for a family; and

(ii) How the PHA determines the total tenant payment for a family.

* * * * *

(5) The HUD-required ''tenancy addendum'' that must be included in the lease;

(6) The form that the family uses to request PHA approval of the assisted tenancy, and an explanation of how to request such approval;

* * * * *

48. Revise § 982.302 to read as follows:

§ 982.302 Issuance of voucher; Requesting PHA approval of assisted tenancy.

(a) When a family is selected, or when a participant family wants to move to another unit, the PHA issues a voucher to the family. The family may search for a unit.

(b) If the family finds a unit, and the owner is willing to lease the unit under the program, the family may request PHA approval of the tenancy. The PHA has the discretion whether to permit the family to submit more than one request at a time.

(c) The family must submit to the PHA a request for approval of the tenancy and a copy of the lease, including the HUD-prescribed tenancy addendum. The request must be submitted during the term of the voucher.

(d) The PHA specifies the procedure for requesting approval of the tenancy. The family must submit the request for approval of the tenancy in the form and manner required by the PHA.

§ 982.303 [Amended]

49. Amend § 982.303 as follows:

a. Revise the section heading to read ''Term of voucher''; and

b. Remove all references to ''certificate or''; and

c. In paragraph (c), revise both references to ''request for lease approval'' to read ''request for approval of the tenancy''.

50. Amend § 982.305 as follows:

a. Revise the section heading to read ''PHA approval of assisted tenancy''; and

b. In the introductory text of paragraph (a), revise the reference to ''to lease a dwelling unit'' to read ''of the assisted tenancy''; and

c. Remove paragraph (a)(5); and

d. Revise paragraphs (a)(3), (a)(4) and (b) as set forth below; and

e. In paragraphs (d) and (e), revise the references to ''to lease a unit'' to read ''of the assisted tenancy''.

§ 982.305 PHA approval of assisted tenancy.

(a) * * *

(3) The lease includes the tenancy addendum; and

(4) The rent to owner is reasonable.

(b) *Actions before lease term.* (1) All of the following must always be completed before the beginning of the initial term of the lease for a unit:

(i) The PHA has inspected the unit and has determined that the unit satisfies the HQS;

(ii) The landlord and the tenant have executed the lease (including the HUD-prescribed tenancy addendum); and

(iii) The PHA has approved leasing of the unit in accordance with program requirements.

(2)(i) The PHA must inspect the unit, determine whether the unit satisfies the HQS, and notify the family and owner of the determination:

(A) In the case of a PHA with up to 1250 budgeted units in its tenant-based program, within fifteen days after the family and the owner submit a request for approval of the tenancy.

(B) In the case of a PHA with more than 1250 budgeted units in its tenant-based program, within a reasonable time after the family submits a request for approval of the tenancy. To the extent practicable, such inspection and determination must be completed within fifteen days after the family and the owner submit a request for approval of the tenancy.

(ii) The fifteen day clock (under paragraph (b)(2)(i)(A) or paragraph (b)(2)(i)(B) of this section) is suspended during any period when the unit is not available for inspection.

* * * * *

51. Amend § 982.306 as follows:

a. In paragraph (a) and the introductory text of paragraph (b), revise the references to ''a unit'' to read ''an assisted tenancy''; and

b. In the introductory text of paragraph (c), revise the reference to ''to lease a unit from an owner'' to read ''of an assisted tenancy''; and

c. Revise paragraph (c)(3) as set forth below; and

d. Redesignate paragraphs (c)(5) and (c)(6) as paragraphs (c)(6) and (c)(7), respectively; and

e. Add new paragraph (c)(5) as set forth below.

§ 982.306 PHA disapproval of owner.

* * * * *

(c) * * *

(3) The owner has engaged in any drug-related criminal activity or any violent criminal activity;

* * * * *

(5) The owner has a history or practice of failing to terminate tenancy of tenants of units assisted under Section 8 or any other federally assisted housing program for activity by the tenant, any member of the household, a guest or another person under the control of any member of the household that:

(i) Threatens the right to peaceful enjoyment of the premises by other residents;

(ii) Threatens the health or safety of other residents, of employees of the PHA, or of owner employees or other persons engaged in management of the housing;

(iii) Threatens the health or safety of, or the right to peaceful enjoyment of their residences, by persons residing in the immediate vicinity of the premises; or

(iv) Is drug-related criminal activity or violent criminal activity; or

* * * * *

52. In § 982.307 revise the section heading and paragraph (a) to read as follows:

§ 982.307 Tenant screening.

(a) *PHA option and owner responsibility.* (1) The PHA may opt to screen family behavior or suitability for tenancy. However, the PHA has no liability or responsibility to the owner or other persons for the family's behavior or the family's conduct in tenancy.

(2) The owner is responsible for screening and selection of the family to occupy the owner's unit. At or before PHA approval of the tenancy, the PHA must inform the owner that screening and selection for tenancy is the responsibility of the owner.

(3) The owner is responsible for screening of families on the basis of their tenancy histories. An owner may consider a family's background with respect to such factors as:

(i) Payment of rent and utility bills;

(ii) Caring for a unit and premises;

(iii) Respecting the rights of other residents to the peaceful enjoyment of their housing;

(iv) Drug-related criminal activity or other criminal activity that is a threat to the health, safety or property of others; and

(v) Compliance with other essential conditions of tenancy.

* * * * *

53. Revise § 982.308 to read as follows:

§ 982.308 Lease and tenancy.

(a) *Tenant's legal capacity to enter lease.* The tenant must have legal capacity to enter a lease under State and local law.

(b) *Owner lease.* The tenant and owner must enter a lease for the unit. The HAP contract shall contain owner's certification that:

(1) The lease between the tenant and the owner is in a standard form used in the locality by the owner and that is generally used for other unassisted tenants in the premises.

(2) The terms and conditions of the lease are consistent with State and local law.

(c) *State and local law.* The PHA may review the lease to determine if the lease complies with State and local law. The PHA may decline to approve the tenancy if the PHA determines that the lease does not comply with State or local law.

(d) *Utilities and appliances.* The lease must specify what utilities and appliances are to be supplied by the owner, and what utilities and appliances are to be supplied by the family.

(e) *Reasonable rent.* The rent to owner must be reasonable (see § 982.507).

(f) *Tenancy addendum.* The HAP contract form required by HUD shall include an addendum (the ''tenancy addendum''), that sets forth tenancy requirements for the program (in accordance with §§ 982.308, 982.309 and 982.310). All provisions of the HUD-required tenancy addendum must be added word-for-word to the owner's standard form lease that is used by the owner for unassisted tenants. The tenant shall have the right to enforce the tenancy addendum against the owner, and the terms of the tenancy addendum shall prevail over any other provisions of the lease.

54. Revise § 982.309 to read as follows:

§ 982.309 Term of assisted tenancy.

(a) *Initial term of lease.* (1) Except as provided in paragraph (a)(2) of this section, the initial lease term must be for at least one year.

(2) The PHA may approve a shorter initial lease term if the PHA determines that:

(i) Such shorter term would improve housing opportunities for the tenant; and

(ii) Such shorter term is the prevailing local market practice.

(3) During the initial term of the lease, the owner may not raise the rent to owner.

(4) The PHA may execute the HAP contract even if there is less than one year remaining from the beginning of the initial lease term to the end of the last expiring funding increment under the consolidated ACC.

(b) *Term of HAP contract.* (1) The term of the HAP contract begins on the first day of the lease term and ends on the last day of the lease term.

(2) The HAP contract terminates if any of the following occurs:

(i) The lease is terminated by the owner or the tenant;

(ii) The PHA terminates the HAP contract; or

(iii) The PHA terminates assistance for the family.

(c) *Family responsibility.* (1) If the family terminates the lease on notice to the owner, the family must give the PHA a copy of the notice of termination at the same time. Failure to do this is a breach of family obligations under the program.

(2) The family must notify the PHA and the owner before the family moves out of the unit. Failure to do this is a breach of family obligations under the program.

55. Amend § 982.310 as follows:

a. Revise paragraphs (a)(1) and (d)(1)(iv) as set forth below;

b. In paragraph (d)(2), revise the reference to ''During the first year of the lease term'' to read ''During the initial lease term,''; and

c. Remove paragraph (e)(3).

§ 982.310 Owner termination of tenancy.

(a) * * *

(1) Serious violation (including but not limited to failure to pay rent or other amounts due under the lease) or repeated violation of the terms and conditions of the lease;

* * * * *

(d) * * *

(1) * * *

(iv) A business or economic reason for termination of the tenancy (such as sale of the property, renovation of the unit, or desire to lease the unit at a higher rental).

* * * * *

56. Amend § 982.352 by revising paragraph (b)(1) to read as follows:

§ 982.352 Eligible housing.

* * * * *

(b) *PHA-owned housing.* (1) A unit that is owned by the PHA that administers the assistance under the consolidated ACC (including a unit owned by an entity substantially controlled by the PHA) may only be assisted under the tenant-based program if all the following conditions are satisfied:

(i) The PHA must inform the family, both orally and in writing, that the

family has the right to select any eligible unit available for lease, and a PHA-owned unit is freely selected by the family, without PHA pressure or steering.

(ii) The unit is not ineligible housing.

(iii) During assisted occupancy, the family may not benefit from any form of housing subsidy that is prohibited under paragraph (c) of this section.

(iv)(A) The PHA must obtain the services of an independent entity to perform the following PHA functions as required under the program rule:

(*1*) To determine rent reasonableness in accordance with § 982.507. The independent agency shall communicate the rent reasonableness determination to the family and the PHA.

(*2*) To assist the family negotiate the rent to owner in accordance with § 982.506.

(*3*) To inspect the unit for compliance with the HQS in accordance with § 982.305(a) and § 982.405 (except that § 982.405(e) is not applicable). The independent agency shall communicate the results of each such inspection to the family and the PHA.

(B) The independent agency used to perform these functions must be approved by HUD. The independent agency may be the unit of general local government for the PHA jurisdiction (unless the PHA is itself the unit of general local government or an agency of such government), or may be another HUD-approved independent agency.

(C) The PHA may compensate the independent agency from PHA ongoing administrative fee income for the services performed by the independent agency. The PHA may not use other program receipts to compensate the independent agency for such services. The PHA and the independent agency may not charge the family any fee or charge for the services provided by the independent agency.

* * * * *

57. Amend § 982.353 as follows:

a. Revise paragraphs (b), (c)(2), and (d) as set forth below; and

b. In paragraph (f), remove the references to ''contract rent (certificate program) or'' and ''(voucher program)''.

§ 982.353 Where family can lease a unit with tenant-based assistance.

* * * * *

(b) *Portability: Assistance outside the initial PHA jurisdiction.* Subject to paragraph (c) of this section, and to § 982.552 and § 982.553, a voucher-holder or participant family has the right to receive tenant-based voucher assistance in accordance with requirements of this part to lease a unit outside the initial PHA jurisdiction, anywhere in the United States, in the jurisdiction of a PHA with a tenant-based program under this part. The initial PHA must not provide such portable assistance for a participant if the family has moved out of its assisted unit in violation of the lease.

* * * * *

(c) * * *

(2) The following apply during the 12 month period from the time when a family described in paragraph (c)(1) of this section is admitted to the program:

(i) The family may lease a unit anywhere in the jurisdiction of the initial PHA;

(ii) The family does not have any right to portability;

(iii) The initial PHA may choose to allow portability during this period.

* * * * *

(d) *Income eligibility.* (1) For admission to the program, a family must be income eligible in the area where the family initially leases a unit with assistance under the program.

(2) If a portable family is a participant in the initial PHA Section 8 tenant-based program (either the PHA voucher program or the PHA certificate program), income eligibility is not redetermined when the family moves to the receiving PHA program under portability procedures.

(3) Except as provided in paragraph (d)(2) of this section, a portable family must be income eligible for admission to the voucher program in the area where the family leases a unit under portability procedures.

* * * * *

§ 982.354 [Removed]

58. Remove § 982.354.

59. Amend § 982.355 as follows:

a. Revise paragraphs (b), (c)(1) and (c)(6) as set forth below;

b. Amend paragraph (c)(4) by removing the reference to ''or certificate'',

c. In paragraph (c)(8), revise the reference to ''request for lease approval'' to read ''request for approval of the tenancy'' and remove the reference to ''certificate or'';

d. In paragraph (d)(1), remove the two references to ''certificate or''; and

e. In paragraph (d)(6), revise the word ''programs'' to read ''program''.

§ 982.355 Portability: Administration by receiving PHA.

* * * * *

(b) In the conditions described in paragraph (a) of this section, a PHA with jurisdiction in the area where the family wants to lease a unit must issue a voucher to the family. If there is more than one such PHA, the initial PHA may choose the receiving PHA.

(c) *Portability procedures.* (1) The receiving PHA does not redetermine elibilibility for a portable family that was already receiving assistance in the initial PHA Section 8 tenant-based program (either the PHA voucher program or certificate program). However, for a portable family that was not already receiving assistance in the PHA tenant-based program, the initial PHA must determine whether the family is eligible for admission to the receiving PHA voucher program.

* * * * *

(6) The receiving PHA must issue a voucher to the family. The term of the receiving PHA voucher may not expire before the expiration date of any initial PHA voucher. The receiving PHA must determine whether to extend the voucher term. The family must submit a request for approval of the tenancy to the receiving PHA during the term of the receiving PHA voucher.

* * * * *

60. Revise § 982.401(a)(4) to read as follows:

§ 982.401 Housing quality standards (HQS).

(a) * * *

(4)(i) In addition to meeting HQS performance requirements, the housing must meet the acceptability criteria stated in this section, unless variations are approved by HUD.

(ii) HUD may approve acceptability criteria variations for the following purposes:

(A) Variations which apply standards in local housing codes or other codes adopted by the PHA; or

(B) Variations because of local climatic or geographic conditions.

(iii) Acceptability criteria variations may only be approved by HUD pursuant to paragraph (a)(4)(ii) of this section if such variations either:

(A) Meet or exceed the acceptability criteria; or

(B) Significantly expand affordable housing opportunities for families assisted under the program.

(iv) HUD will not approve any acceptability criteria variation if HUD believes that such variation is likely to adversely affect the health or safety of participant families, or severely restrict housing choice.

* * * * *

61. Amend § 982.402 as follows:

a. Amend paragraph (a)(3) by removing the references to ''certificate or'' and ''or certificate'';

b. Revise paragraph (c) to read as follows:

§ 982.402 Subsidy standards.

* * * * *

(c) *Effect of family unit size-maximum subsidy in voucher program.* The family unit size as determined for a family under the PHA subsidy standard is used to determine the maximum rent subsidy for a family assisted in the voucher program. For a voucher tenancy, the PHA establishes payment standards by number of bedrooms. The payment standard for a family shall be the lower of:

(1) The payment standard amount for the family unit size; or

(2) The payment standard amount for the unit size of the unit rented by the family.

* * * * *

62. Amend § 982.403 as follows:

a. Revise the section heading to read ''Terminating HAP contract when unit is too small'';

b. Remove paragraph (a)(1);

c. Redesignate paragraphs (a)(2) and (a)(3) as paragraphs (a)(1) and (a)(2), respectively;

d. Amend redesignated paragraph (a)(1) by removing the reference to ''certificate or'';

e. Amend paragraph (b)(2) by replacing the word ''certificate'' with ''voucher''.

f. Amend paragraph (b)(4) by removing the phrase ''within the FMR/exception rent limit''; and

g. Revise the introductory text of redesignated paragraph (c) as set forth below.

§ 982.403 Terminating HAP contract when unit is too small.

* * * * *

(c) *Termination.* When the PHA terminates the HAP contract under paragraph (a) of this section:

* * * * *

63. Amend § 982.405 as follows:

a. Revise the section heading and paragraph (a) as set forth below; and

b. Add paragraph (f) as set forth below.

§ 982.405 PHA initial and periodic unit inspection.

(a) The PHA must inspect the unit leased to a family prior to the initial term of the lease, at least annually during assisted occupancy, and at other times as needed, to determine if the unit meets the HQS. (See § 982.305(b)(2) concerning timing of initial inspection by the PHA.)

* * * * *

(f) The PHA must adopt procedural guidelines and performance standards for conducting required HQS inspections. The PHA guidelines and standards must conform with practices utilized in the private housing market, and facilitate efficient administration of assistance under the program. The PHA administrative plan shall state the PHA guidelines and standards for conducting HQS inspections.

64. Revise § 982.451(b)(5) to read as follows:

§ 982.451 Housing assistance payments contract.

* * * * *

(b) * * *

(5)(i) The PHA must pay the housing assistance payment promptly when due to the owner in accordance with the HAP contract.

(ii) The HAP contract shall provide for penalties against the PHA for late payment of housing assistance payments due to the owner under the contract, where such penalties are in accordance with generally accepted practices and law, as applicable in the local housing market, governing penalties for late payment of rent by a tenant. However, the PHA shall not be obligated to pay any late payment penalty if HUD determines that late payment by the PHA is due to factors beyond the PHA's control. The PHA may add HAP contract provisions which define when the HAP payment by the PHA is deemed received by the owner (e.g. upon mailing by the PHA or actual receipt by the owner).

(iii) The PHA may only use the following sources to pay a late payment penalty from program receipts under the consolidated ACC: administrative fee income for the program; or the administrative fee reserve for the program. The PHA may not use other program receipts for this purpose.

§ 982.452 [Amended]

65. Amend § 982.452(b)(1) by removing the reference to ''certificate-holder or''.

§ 982.453 [Amended]

66. In § 982.453(a)(5), revise the reference to ''drug-trafficking'' to read ''drug-related criminal activity''.

§ 982.454 [Amended]

67. Amend § 982.454 by removing the last sentence.

68. Revise § 982.455 to read as follows:

§ 982.455 Automatic termination of HAP contract.

The HAP contract terminates automatically 180 calendar days after the last housing assistance payment to the owner.

69. Revise § 982.456(b) to read as follows:

§ 982.456 Third parties.

* * * * *

(b)(1) The family is not a party to or third party beneficiary of the HAP contract. Except as provided in paragraph (b)(2) of this section, the family may not exercise any right or remedy against the owner under the HAP contract.

(2) The tenant may exercise any right or remedy against the owner under the lease between the tenant and the owner, including enforcement of the owner's obligations under the tenancy addendum (which is included both in the HAP contract between the PHA and the owner; and in the lease between the tenant and the owner.)

* * * * *

§§ 982.457, 982.504, 982.505, 982.506, 982.508 and 982.512 [Removed]

70. Remove §§ 982.457, 982.504, 982.505, 982.506, 982.508, and 982.512.

71. Revise the table of contents for Subpart K to read as follows:

Subpart K—Rent and Housing Assistance Payment

982.501 Overview.
982.502 Conversion to voucher program.
982.503 Voucher tenancy: Payment standard amount and schedule.
982.504 Voucher tenancy: Payment standard for family in restructured subsidized multifamily project.
982.505 Voucher tenancy: How to calculate housing assistance payment.
982.506 Negotiating rent to owner.
982.507 Rent to owner; Reasonable rent.
982.508 Rent to owner: Maximum rent at initial occupancy.
982.509 Rent to owner in subsidized projects.
982.513 Other fees and charges.
982.516 Family income and composition: Regular and interim examinations.
982.517 Utility allowance schedule.
982.518 Regular tenancy: How to calculate housing assistance payment.
982.519 Regular tenancy: Annual adjustment of rent to owner.
982.520 Regular tenancy: Special adjustment of rent to owner.
982.521 Regular tenancy: Rent to owner in subsidized project.

72. Revise § 982.501 to read as follows:

§ 982.501 Overview.

(a) This subpart describes program requirements concerning the housing assistance payment and rent to owner. These requirements apply to the Section 8 tenant-based program.

(b) There are two types of tenancies in the Section 8 tenant-based program:

(1) A tenancy under the voucher program.

(2) A tenancy under the certificate program (commenced before merger of the certificate and voucher programs on the merger date).

(c) Unless specifically stated, requirements of this part are the same for all tenancies. Sections 982.503, 982.504, and 982.505 only apply to a voucher tenancy. Sections 982.518, 982.519, 982.520, and 982.521 only apply to a tenancy under the certificate program.

§§ 982.502, 982.503, 982.507, 982.509, 982.510, 982.511, and 982.513 [Redesignated as §§ 982.506, 982.507, 982.518, 982.519, 982.520, 982.509 and 982.510, respectively]

73. Redesignate §§ 982.502, 982.503, 982.507, 982.509, 982.510, 982.511, and 982.513 as §§ 982.506, 982.507, 982.518, 982.519, 982.520, 982.509, and 982.510, respectively.

74. Add new §§ 982.502, 982.503, 982.504, 982.505, and 982.508 to read as follows:

§ 982.502 Conversion to voucher program.

(a) *New HAP contracts.* On and after the merger date, the PHA may only enter into a HAP contract for a tenancy under the voucher program, and may not enter into a new HAP contract for a tenancy under the certificate program.

(b) *Over-FMR tenancy.* If the PHA had entered into any HAP contract for an over-FMR tenancy under the certificate program prior to the merger date, on and after the merger date such tenancy shall be considered and treated as a tenancy under the voucher program, and shall be subject to the voucher program requirements under this part, including calculation of the voucher housing assistance payment in accordance with § 982.505. However, § 982.505(b)(2) shall not be applicable for calculation of the housing assistance payment prior to the effective date of the second regular reexamination of family income and compostion on or after the merger date.

(c) *Voucher tenancy.* If the PHA had entered into any HAP contract for a voucher tenancy prior to the merger date, on and after the merger date such tenancy shall continue to be considered and treated as a tenancy under the voucher program, and shall be subject to the voucher program requirements under this part, including calculation of the voucher housing assistance payment in accordance with § 982.505. However, § 982.505(b)(2) shall not be applicable for calculation of the housing assistance payment prior to the effective date of the second regular reexamination of family income and composition on or after the merger date.

(d) *Regular certificate tenancy.* The PHA must terminate program assistance under any outstanding HAP contract for a regular tenancy under the certificate program (entered prior to the merger date) at the effective date of the second regular reexamination of family income and composition on or after the merger date. Upon such termination of assistance, the HAP contract for such tenancy terminates automatically. The PHA must give at least 120 days written notice of such termination to the family and the owner, and the PHA must offer the family the opportunity for continued tenant-based assistance under the voucher program. The PHA may deny the family the opportunity for continued assistance in accordance with §§ 982.552 and 982.553.

§ 982.503 Voucher tenancy: Payment standard amount and schedule.

(a) *Payment standard schedule.* (1) HUD publishes the fair market rents for each market area in the United States (see part 888 of this title). The PHA must adopt a payment standard schedule that establishes voucher payment standard amounts for each FMR area in the PHA jurisdiction. For each FMR area, the PHA must establish payment standard amounts for each ''unit size.'' Unit size is measured by number of bedrooms (zero-bedroom, one-bedroom, and so on).

(2) The payment standard amounts on the PHA schedule are used to calculate the monthly housing assistance payment for a family (§ 982.505).

(3) The PHA voucher payment standard schedule shall establish a single payment standard for each unit size in an FMR area and, if applicable, in an exception payment standard area within an FMR area.

(b) *Establishing payment standard amounts.* (1)(i) The PHA may establish the payment standard amount for a unit size at any level between 90 percent and 110 percent of the published FMR for that unit size. HUD approval is not required to establish a payment standard amount in that range (''basic range'').

(ii) The PHA may establish a separate payment standard within the basic range for a designated part of an FMR area.

(2) The PHA must request HUD approval to establish a payment standard amount that is higher or lower than the basic range. HUD has sole discretion to grant or deny approval of a higher or lower payment standard amount. Paragraph (c) of this section describes the requirements for approval of a higher payment standard amount (''exception payment standard amount'').

(c) *HUD approval of exception payment standard amount.* (1) *HUD discretion.* At HUD's sole discretion, HUD may approve a payment standard amount that is higher than the basic range for a designated part of the fair market rent area (called an ''exception area''). HUD may approve an exception payment standard amount in accordance with this paragraph (c) of this section for all units, or for all units of a given unit size, leased by program families in the exception area. Any PHA with jurisdiction in the exception area may use the HUD-approved exception payment standard amount.

(2) *Above 110 percent of FMR to 120 percent of FMR.* The HUD Field Office may approve an exception payment standard amount from above 110 percent of the published FMR to 120 percent of the published FMR if such office determines that such approval is justified by either the median rent method or the 40th percentile rent as described below (and that such approval is also supported by an appropriate program justification in accordance with paragraph (c)(4) of this section).

(i) *Median rent method.* In the median rent method, HUD determines the exception payment standard amount by multiplying the FMR times a fraction of which the numerator is the median gross rent of the exception area and the denominator is the median gross rent of the entire FMR area. In this method, HUD uses median gross rent data from the most recent decennial United States census, and the exception area may be any geographic entity within the FMR area (or any combination of such entities) for which median gross rent data is provided in decennial census products.

(ii) *40th percentile rent method.* In this method, HUD determines that the area exception rent equals the 40th percentile of rents to lease standard quality rental housing in the exception area. HUD determines the 40th percentile rent in accordance with the methodology described in § 888.113 of this title for determining fair market rents. A PHA must present statistically representative rental housing survey data to justify HUD approval.

(3) *Above 120 percent of FMR.* (i) At the request of a PHA, the Assistant Secretary for Public and Indian Housing may approve an exception payment standard amount for the total area of a county, PHA jurisdiction, or place if the Assistant Secretary determines that:

(A) Such approval is necessary to prevent financial hardship for families;

(B) Such approval is supported by statistically representative rental housing survey data to justify HUD approval in accordance with the methodology described in § 888.113 of this title; and

(C) Such approval is also supported by an appropriate program justification in accordance with paragraph (c)(4) of this section.

(ii) For purposes of paragraph (c)(3) of this section, the term ''place'' is an incorporated place or a U.S. Census designated place. An incorporated place is established by State law and includes cities, boroughs, towns, and villages. A U.S. Census designated place is the statistical counterpart of an incorporated place.

(4) *Program justification.* (i) HUD will only approve an exception payment standard amount (pursuant to paragraph (c)(2) or paragraph (c)(3) of this section) if HUD determines that approval of such higher amount is needed either:

(A) To help families find housing outside areas of high poverty, or

(B) Because voucher holders have trouble finding housing for lease under the program within the term of the voucher.

(ii) HUD will only approve an exception payment standard amount (pursuant to paragraph (c)(3) of this section) after six months from the date of HUD approval of an exception payment standard pursuant to paragraph (c)(2) of this section for the area.

(5) *Population.* The total population of HUD-approved exception areas in an FMR area may not include more than 50 percent of the population of the FMR area.

(6) *Withdrawal or modification.* At any time, HUD may withdraw or modify approval to use an exception payment standard amount.

(7) *Transition: Area exception rents approved prior to merger date.* Subject to paragraph (c)(6) of this section, the PHA may establish an exception payment standard amount up to the amount of a HUD-approved area exception rent in effect at the merger date.

(d) *HUD review of PHA payment standard schedule.* (1) HUD will monitor rent burdens of families assisted in a PHA's voucher program. If 40 percent or more of such families occupying units of any particular unit size pay more than 30 percent of adjusted income as the family's share, HUD will review the PHA payment standard amount for that unit size, and may require the PHA to establish an increased payment standard amount within the basic range.

(2) Upon such HUD review, HUD may require the PHA to modify the payment standard amounts on the PHA payment standard schedule.

§ 982.504 Voucher tenancy: Payment standard for family in restructured subsidized multifamily project.

(a) This section applies to tenant-based assistance under the voucher program if all the following conditions are applicable:

(1) Such tenant-based voucher assistance is provided to a family pursuant to § 401.421 of this title when HUD has approved a restructuring plan, and the participating administrative entity has approved the use of tenant-based assistance to provide continued assistance for such families. Such tenant-based voucher assistance is provided for a family previously receiving project-based assistance in an eligible project (as defined in § 401.2 of this title) at the time when the project-based assistance terminates.

(2) The family chooses to remain in the restructured project with tenant-based assistance under the program and leases a unit that does not exceed the family unit size;

(3) The lease for such assisted tenancy commences during the first year after the project-based assistance terminates.

(b) The initial payment standard for the family under such initial lease is the sum of the reasonable rent to owner for the unit plus the utility allowance for tenant-paid utilities. (Determination of such initial payment standard for the family is not subject to paragraphs (c)(1) and (c)(2) of § 982.505. Except for determination of the initial payment standard as specifically provided in paragraph (b) of this section, the payment standard and housing assistance payment for the family during the HAP contract term shall be determined in accordance with § 982.505.)

§ 982.505 Voucher tenancy: How to calculate housing assistance payment.

(a) *Use of payment standard.* A payment standard is used to calculate the monthly housing assistance payment for a family. The ''payment standard'' is the maximum monthly subsidy payment.

(b) *Amount of monthly housing assistance payment.* The PHA shall pay a monthly housing assistance payment on behalf of the family that is equal to the *lower* of:

(1) The payment standard minus the total tenant payment; or

(2) The gross rent minus the total tenant payment.

(c) *Payment standard for family.* (1) The payment standard is the lower of:

(i) The payment standard amount for the family unit size; or

(ii) The payment standard amount for the size of the dwelling unit rented by the family.

(2) If the dwelling unit is located in an exception area, the PHA must use the appropriate payment standard amount for the exception area.

(3) During the HAP contract term, the payment standard for a family is the higher of:

(i) The initial payment standard (at the beginning of the HAP contract term), as determined in accordance with paragraphs (c)(1) and (c)(2) of this section, minus any amount by which the initial rent to owner exceeds the current rent to owner; or

(ii) The payment standard, as determined in accordance with paragraphs (c)(1) and (c)(2) of this section, as determined at the most recent regular reexamination of family income and composition effective after the beginning of the HAP contract term.

(4) At the next regular reexamination following a change in family size or composition that causes a change in family unit size during the HAP contract term, and for any examination thereafter during the term:

(i) Paragraph (c)(3)(i) of this section does not apply; and

(ii) The new family unit size must be used to determine the payment standard.

§ 982.508 Rent to owner: maximum rent at initial occupancy.

At the time a family initially receives tenant-based assistance for occupancy of a dwelling unit, the family share may not exceed 40 percent of the family's monthly adjusted income.

§ 982.509 [Amended]

74a. Revise the section heading of newly designated § 982.509 to read ''Rent to owner in subsidized projects.''

75. Amend § 982.516 as follows:

a. Revise paragraph (d)(2) as set forth below;

b. Amend paragraph (e) by removing the reference to ''and family unit size''; and

c. Add paragraph (f) as set forth below.

§ 982.516 Family income and composition: Regular and interim examinations.

* * * * *

(d) * * *

(2) At the effective date of a regular or interim reexamination, the PHA must make appropriate adjustments in the housing assistance payment. (For a voucher tenancy, the housing assistance payment shall be calculated in accordance with § 982.505. For a certificate tenancy, the housing assistance payment shall be calculated in accordance with § 982.518.)

* * * * *

(f) *Accuracy of family income data.* The PHA must establish procedures that

are appropriate and necessary to assure that income data provided by applicant or participant families is complete and accurate.

76. Add § 982.521 to read as follows:

§ 982.521 Regular tenancy: Rent to owner in subsidized project.

For a certificate tenancy in an insured or non-insured Section 236 project, a Section 515 project of the Rural Development Administration, a Section 202 project or a Section 221(d)(3) below market interest rate project, the rent to owner is the basic rental charge (as defined in 12 U.S.C. 1715z–1(f)(1), minus any utility allowance for tenant-paid utilities). The rent to owner may not be adjusted by applying the published Section 8 annual adjustment factor, and a special adjustment may not be approved.

§ 982.551 [Amended]

77. In § 982.551, amend paragraph (b)(2) by removing the second sentence, and in paragraph (b)(3) remove the phrase ''and 24 CFR part 813''.

78. Amend § 982.552 as follows:

a. Amend paragraph (a)(2) to remove the phrase ''certificate or'';

b. Revise paragraphs (b) and (c) as set forth below;

c. Remove paragraphs (d) and (e); and

d. Redesignate paragraph (f) as paragraph (d).

§ 982.552 PHA denial or termination of assistance for family.

* * * * *

(b) *Requirement to deny admission or terminate assistance.* (1) During a reasonable time period determined by the PHA, the PHA may not admit a family to the program if any member of the family has been evicted from federally assisted housing for serious violation of the lease.

(2) The PHA must terminate program assistance for a family evicted from housing assisted under the program for serious violation of the lease.

(3) The PHA must deny admission to the program for an applicant, or terminate program assistance for a participant, if any member of the family fails to sign and submit consent forms for obtaining information in accordance with part 5, subparts B and F of this title.

(4) The family must submit required evidence of citizenship or eligible immigration status. See part 5 of this title for a statement of circumstances in which the PHA must deny admission or terminate program assistance because a family member does not establish citizenship or eligible immigration status, and the applicable informal hearing procedures.

(c) *Authority to deny admission or terminate assistance.* (1) *Grounds for denial or termination of assistance.* The PHA may at any time deny program assistance for an applicant, or terminate program assistance for a participant, for any of the following grounds:

(i) If the family violates any family obligations under the program (see § 982.551). See § 982.553 concerning denial or termination of assistance for crime by family members.

(ii) If any member of the family has ever been evicted from public housing.

(iii) If a PHA has ever terminated assistance under the program for any member of the family.

(iv) If any member of the family has committed fraud, bribery, or any other corrupt or criminal act in connection with any Federal housing program.

(v) If the family currently owes rent or other amounts to the PHA or to another PHA in connection with Section 8 or public housing assistance under the 1937 Act.

(vi) If the family has not reimbursed any PHA for amounts paid to an owner under a HAP contract for rent, damages to the unit, or other amounts owed by the family under the lease.

(vii) If the family breaches an agreement with the PHA to pay amounts owed to a PHA, or amounts paid to an owner by a PHA. (The PHA, at its discretion, may offer a family the opportunity to enter an agreement to pay amounts owed to a PHA or amounts paid to an owner by a PHA. The PHA may prescribe the terms of the agreement.)

(viii) If a family participating in the FSS program fails to comply, without good cause, with the family's FSS contract of participation.

(ix) If the family has engaged in or threatened abusive or violent behavior toward PHA personnel.

(x) If the family fails to fulfill its obligations under the Section 8 welfare-to-work voucher program.

(2) *PHA discretion to consider circumstances.* In deciding whether to deny admission or terminate assistance because of action or failure to act by members of the family, the PHA has discretion to consider all of the circumstances in each case, including the seriousness of the case, the extent of participation or culpability of individual family members, and the effects of denial or termination of assistance on other family members who were not involved in the action or failure.

(3) *Exclusion of family members.* In determining whether to deny admission or terminate assistance, the PHA may impose, as a condition of continued assistance for other family members, a requirement that family members who participated in or were culpable for the action or failure will not reside in the unit. The PHA may permit the other members of a participant family to continue receiving assistance.

* * * * *

79. Amend § 982.554 as follows:

a. In paragraph (c)(4), remove the phrase ''certificate or'';

b. Revise paragraph (c)(5) to read as follows:

§ 982.554 Informal review for applicant.

* * * * *

(c) * * *

(5) A PHA determination not to grant approval of the tenancy.

* * * * *

§ 982.555 [Amended]

80. In § 982.555, amend paragraph (b)(4) by removing the phrase ''certificate or''.

81. Revise § 982.602 to read as follows:

§ 982.602 SRO: Who may reside in an SRO?

A single person may reside in an SRO housing unit.

82. Revise § 982.604 to read as follows:

§ 982.604 SRO: Voucher housing assistance payment.

(a) For a person residing in SRO housing, the payment standard is 75 percent of the zero-bedroom payment standard amount on the PHA payment standard schedule. For a person residing in SRO housing in an exception area, the payment standard is 75 percent of the HUD-approved zero-bedroom exception payment standard amount.

(b) The utility allowance for an assisted person residing in SRO housing is 75 percent of the zero bedroom utility allowance.

83. In § 982.608 revise the section heading and paragraph (a) to read as follows:

§ 982.608 Congregate housing: Voucher housing assistance payment.

(a) Unless there is a live-in aide:

(1) For a family residing in congregate housing, the payment standard is the zero-bedroom payment standard amount on the PHA payment standard schedule. For a family residing in congregate housing in an exception area, the payment standard is the HUD-approved zero-bedroom exception payment standard amount.

(2) However, if there are two or more rooms in the unit (not including kitchen or sanitary facilities), the payment standard for a family residing in

congregate housing is the one-bedroom payment standard amount.

* * * * *

84. Amend § 982.613 as follows:

a. Revise the section heading as set forth below;

b. In paragraph (b)(2), revise the reference to ''§ 982.503'' to read ''§ 982.507''; and

Revise paragraph (c) as set forth below.

§ 982.613 Group home: Rent and voucher housing assistance payment.

* * * * *

(c) *Payment standard.* (1) *Family unit size.* (i) Unless there is a live-in aide, the family unit size is zero or one bedroom.

(ii) If there is a live-in aide, the live-in aide must be counted in determining the family unit size.

(2) The payment standard for a person who resides in a group home is the lower of:

(i) The payment standard amount on the PHA payment standard schedule for the family unit size; or (ii) The pro-rata portion of the payment standard amount on the PHA payment standard schedule for the group home size.

(iii) If there is a live-in aide, the live-in aide must be counted in determining the family unit size.

* * * * *

85. Amend § 982.617 as follows:

a. Revise the section heading to read as set forth below;

b. In paragraph (b)(2) revise the reference to ''§ 982.503'' to read ''§ 982.507''; and

c. Revise paragraph (c) to read as follows:

§ 982.617 Shared housing: Rent and voucher housing assistance payment.

* * * * *

(c) *Payment standard.* The payment standard for a family that resides in a shared housing is the lower of:

(1) The payment standard amount on the PHA payment standard schedule for the family unit size; or

(2) The pro-rata portion of the payment standard amount on the PHA payment standard schedule for the size of the shared housing unit.

* * * * *

§ 982.619 [Amended]

86. Amend § 982.619 as follows:

a. In paragraph (b)(1), revise the reference to ''§ 982.503'' to read ''§ 982.507''; and

b. In paragraph (b)(4), revise the reference to ''§ 982.509'' to read ''§ 982.519'' and revise the reference to ''§ 982.510'' to read ''§ 982.520''.

87. Revise § 982.623 to read as follows:

§ 982.623 Manufactured home space rental: Housing assistance payment.

(a) *Fair market rent.* The FMR for a manufactured home space is determined in accordance with § 888.113(e) of this title.

(b) *Housing assistance payment: For certificate tenancy.* (1) During the term of a certificate tenancy (entered prior to the merger date), the amount of the monthly housing assistance payment equals the lesser of the amounts specified in paragraphs (b)(1)(i) or (b)(1)(ii) of this section:

(i) Manufactured home space cost minus the total tenant payment.

(ii) The rent to owner for the manufactured home space.

(2) ''Manufactured home space cost'' means the sum of:

(i) The amortization cost,

(ii) The utility allowance, and

(iii) The rent to owner for the manufactured home space.

(c) *Housing assistance payment for voucher tenancy.* (1) There is a separate FMR for a family renting a manufactured home space. The FMR for rental of a manufactured home space is 30 percent of the published FMR for a two-bedroom unit (see FMR notices published by HUD pursuant to part 888 of this title).

(2) The payment standard shall be determined in accordance with § 982.505.

(3) The PHA shall pay a monthly housing assistance payment on behalf of the family that is equal to the lower of:

(i) The payment standard minus the total tenant payment; or

(ii) The rent paid for rental of the real property on which the manufactured home owned by the family is located (''space rent'') minus the total tenant payment.

(4) The space rent is the sum of the following as determined by the PHA:

(i) Rent to owner for the manufactured home space;

(ii) Owner maintenance and management charges for the space;

(iii) The utility allowance for tenant-paid utilities.

Dated: April 21, 1999

Andrew Cuomo,

Secretary.

[FR Doc. 99–12082 Filed 5–13–99; 8:45 am]

BILLING CODE 4210–32–P

Reader Aids

Federal Register

Vol. 64, No. 93

Friday, May 14, 1999

CUSTOMER SERVICE AND INFORMATION

Federal Register/Code of Federal Regulations

General Information, indexes and other finding aids	**202–523–5227**
Laws	**523–5227**
Presidential Documents	
Executive orders and proclamations	**523–5227**
The United States Government Manual	**523–5227**
Other Services	
Electronic and on-line services (voice)	**523–4534**
Privacy Act Compilation	**523–3187**
Public Laws Update Service (numbers, dates, etc.)	**523–6641**
TTY for the deaf-and-hard-of-hearing	**523–5229**

ELECTRONIC RESEARCH

World Wide Web

Full text of the daily Federal Register, CFR and other publications:

http://www.access.gpo.gov/nara

Federal Register information and research tools, including Public Inspection List, indexes, and links to GPO Access:

http://www.nara.gov/fedreg

E-mail

PENS (Public Law Electronic Notification Service) is an E-mail service that delivers information about recently enacted Public Laws. To subscribe, send E-mail to

listproc@lucky.fed.gov

with the text message:

subscribe publaws-l <firstname> <lastname>

Use listproc@lucky.fed.gov only to subscribe or unsubscribe to PENS. We cannot respond to specific inquiries at that address.

Reference questions. Send questions and comments about the Federal Register system to:

info@fedreg.nara.gov

The Federal Register staff cannot interpret specific documents or regulations.

FEDERAL REGISTER PAGES AND DATES, MAY

23531–23748 3
23749–24020 4
24021–24282 5
24283–24500 6
24501–24930 7
24931–25188 10
25189–25418 11
25419–25796 12
25797–26270 13
26271–26652 14

CFR PARTS AFFECTED DURING MAY

At the end of each month, the Office of the Federal Register publishes separately a List of CFR Sections Affected (LSA), which lists parts and sections affected by documents published since the revision date of each title.

3 CFR

Proclamations:
7189 24275
7190 24277
7191 24279
7192 24281
7193 25189
7194 25191
7195 25797

Executive Orders:
13088 (Amended by EO 13121) 24021
13121 24021
July 2, 1910 (Revoked in part by PLO 7388) 23856

Administration Orders:
Presidential Determination No. 99–22 of April 29, 1999 24501

5 CFR

330 24503
351 23531
532 23531

Proposed Rules:
2634 25849

7 CFR

301 23749
354 25799
457 24931
915 26271
929 24023
979 23754
989 25419
993 23759
1079 25193
1307 23532
1308 23532
1430 24933
1703 25422
1940 24476
1944 24476

Proposed Rules:
29 25462
400 25464
1079 25851
1412 24091

8 CFR

3 25756
212 25756
240 25756
245 25756
274a 25756
299 25756

9 CFR

Proposed Rules:
Ch. I 23795
3 26330

10 CFR

9 24936
50 23763

Proposed Rules:
1 24531
2 .....24092, 24531
7 24531
9 24531
19 24092
20 24092
21 24092
30 24092
32 23796
40 24092
50 24531
51 .....24092, 24531
52 24531
60 .....24092, 24531
61 24092
62 24531
63 24092
72 24531
75 24531
76 24531
100 24531
110 24531

12 CFR

611 25423
620 25423
960 24025

Proposed Rules:
Ch. I 25469

13 CFR

120 26273
121 26275

Proposed Rules:
121 23798

14 CFR

25 25800
39 .....23763, 23766, 24028, 24029, 24031, 24033, 24034, 24505, 24507, 25194, 25197, 25198, 25200, 25424, 25426, 25802, 25804
71 .....23538, 23903, 24035, 24036, 24510, 24513, 25806
73 23768
97 .....24283, 24284

Proposed Rules:
25 25851
39 .....23552, 24092, 24542, 24544, 24963, 24964, 25218
71 .....23805, 23806, 23807, 23808, 23809, 225220, 25221, 25222
108 23554

15 CFR

30 24942
746 ....24018, 25807

16 CFR

Proposed Rules:
453 24250

17 CFR

1 24038
17 24038
18 24038
150 24038
240 25144
249 25144
270 24488
Proposed Rules:
240 25153
249 25153
270 24489

18 CFR

2 26572
153 26572
157 26572
284 26572
375 26572
380 26572
385 26572

21 CFR

178 ....24943, 25428, 26281
558 23539
640 26282
Proposed Rules:
207 26330
607 26330
640 26344
807 26330
884 24967
1020 23811
1308 ....24094, 25407

22 CFR

171 25430

24 CFR

5 25726
248 26632
791 26632
792 26632
982 26632
Proposed Rules:
Ch. IX 24546
761 25736
888 24866

25 CFR

Proposed Rules:
20 24296

26 CFR

Proposed Rules:
1 ....23554, 23811, 24096, 25223, 26348
20 23811
25 23811
31 23811
40 23811

27 CFR

Proposed Rules:
9 24308

28 CFR

540 25794
Proposed Rules:
0 24972
16 24972
20 24972
50 24972
302 24547
551 24468

29 CFR

4044 26287
Proposed Rules:
2700 24547

30 CFR

208 26240
241 26240
242 26240
243 26240
250 26240
290 26240
943 23540
946 23542
948 26288
Proposed Rules:
701 23811
724 23811
773 23811
774 23811
778 23811
842 23811
843 23811
846 23811

31 CFR

205 24242
515 25808
Proposed Rules:
1 24454

32 CFR

290 25407
706 ....25433, 25434, 25435, 25436, 25437, 25820

33 CFR

117 ....23545, 24944, 25438, 26295
165 ....24286, 24945, 24947, 26295
323 25120
Proposed Rules:
100 ....24979, 24980
117 ....26349, 26350
165 ....23545, 24982, 24983, 24985, 24987

34 CFR

300 24862

36 CFR

254 25821
62 25708

37 CFR

251 25201
Proposed Rules:
1 25223
2 25223
3 25223
6 25223

38 CFR

4 25202
21 ....23769, 26297
Proposed Rules:
4 25246
17 23812

40 CFR

Ch. VII 25126
9 ....23906, 25126
35 23734
51 26298
52 ....23774, 24949, 25210, 25214, 25822, 25825, 25828, 26306
60 ....24049, 24511, 26484
61 24288
62 25831
63 ....24288, 24511, 26311
70 23777
72 25834
73 25834
81 24949
85 23906
86 23906
88 23906
136 26315
180 ....24292, 25439, 25448, 25451, 25842
232 25120
260 26315
261 25410
262 25410
268 25410
271 23780
300 24949
600 23906
Proposed Rules:
52 ....23813, 24117, 24119, 24549, 24988, 24989, 25854, 25855, 25862, 26352
60 26569
62 25863
70 23813
80 ....26004, 26142
81 24123
85 26004
86 ....26004, 26142
141 25964
142 25964
143 25964
194 25863
271 ....23814, 25258
300 24990

42 CFR

405 25456
410 25456
413 25456
414 25456
415 25456
424 25456
485 25456
498 24957
Proposed Rules:
405 24549
412 24716
413 24716
483 24716
485 24716

43 CFR

4 26240

44 CFR

59 24256
61 24256
64 ....24512, 24957
65 ....24515, 24516
67 24517
Proposed Rules:
67 24550

45 CFR

Proposed Rules:
2505 25260

46 CFR

16 25407
500 23545
501 23545
502 23551
503 23545
504 23545
506 23545
507 23545
508 23545
514 23782
530 23782
535 23794
540 23545
545 23551
550 23551
551 23551
555 23551
560 23551
565 23551
571 23551
572 23794
582 23545
585 23551
586 23551
587 23551
588 23551
Proposed Rules:
356 24311

47 CFR

73 ....24522, 24523, 26327
74 24523
Proposed Rules:
1 23571
22 23571
24 23571
26 23571
27 23571
73 ....23571, 24565, 24566, 24567, 24996, 24997, 24998
74 23571
80 23571
87 23571
90 23571
95 23571
97 23571
101 23571

48 CFR

213 24528
225 ....24528, 24529
252 ....24528, 24529
715 25407
1815 25214
1816 25214
1819 25214
1852 25214
Proposed Rules:
1 26264
12 26264
16 24472
23 26264
45 23982
48 24472
52 ....23982, 24472, 26264
215 23814

49 CFR

1 24959
216 25540

223.....25540
229.....25540
231.....25540
232.....25540
238.....25540

Proposed Rules:

229.....23816
231.....23816
232.....23816
360.....24123
387.....24123
390.....24128
396.....24128
544.....26352
605.....23590
611.....25864

50 CFR

17.....25216
222.....25460
223.....25460
226.....24049
600.....24062
648.....24066
660 .....24062, 24078, 26328
679.....24960, 25216

Proposed Rules:

17.....25263
20.....23742
223.....26355
224.....26355
226.....24998, 26355
648.....25472

REMINDERS

The items in this list were editorially compiled as an aid to Federal Register users. Inclusion or exclusion from this list has no legal significance.

RULES GOING INTO EFFECT MAY 14, 1999

DEFENSE DEPARTMENT

Vocational rehabilitation and education:

Reservists' education—

Montgomery GI Bill-Selected Reserve; rates payable increase; published 5-14-99

ENVIRONMENTAL PROTECTION AGENCY

Air pollutants, hazardous; national emission standards:

Equivalent emission limitations by permit; implementation; published 5-14-99

Air quality implementation plans; approval and promulgation; various States:

Kentucky; published 3-15-99

Oregon; published 3-15-99

Texas; published 3-15-99

HEALTH AND HUMAN SERVICES DEPARTMENT

Food and Drug Administration

Food additives:

Adhesives coatings and components—

1,3-propanediamine, etc.; published 5-14-99

HOUSING AND URBAN DEVELOPMENT DEPARTMENT

Fair housing:

Complaint processing; plain language revision and reorganization; published 4-14-99

INTERIOR DEPARTMENT

Surface Mining Reclamation and Enforcement Office

Permanent program and abandoned mine land reclamation plan submissions:

West Virginia; published 5-14-99

SMALL BUSINESS ADMINISTRATION

Business loans:

Premier certified lenders program; pilot program extended and certified development company authority expanded; published 5-14-99

Surety bond guarantees:

Technical amendments; published 4-14-99

TRANSPORTATION DEPARTMENT

Coast Guard

Vocational rehabilitation and education:

Reservists' education—

Montgomery GI Bill-Selected Reserve; rates payable increase; published 5-14-99

TRANSPORTATION DEPARTMENT

Federal Aviation Administration

Airworthiness directives:

Bell; published 4-29-99

VETERANS AFFAIRS DEPARTMENT

Vocational rehabilitation and education:

Reservists' education—

Montgomery GI Bill-Selected Reserve; rates payable increase; published 5-14-99¶

RULES GOING INTO EFFECT MAY 15, 1999

TRANSPORTATION DEPARTMENT

Coast Guard

Ports and waterways safety:

New York Harbor, NY; safety zone; published 5-14-99

COMMENTS DUE NEXT WEEK

AGRICULTURE DEPARTMENT

Agricultural Marketing Service

Cotton research and promotion order:

Imported cotton and cotton content of imported products; supplemental assessment calculation; comments due by 5-19-99; published 4-19-99

Soybean promotion and research program; referendum; comments due by 5-17-99; published 4-16-99

AGRICULTURE DEPARTMENT

Animal and Plant Health Inspection Service

Interstate transportation of animals and animal products (quarantine):

Johne's disease in domestic animals; comments due by 5-21-99; published 3-22-99

Viruses, serums, toxins, etc.:

Packaging and labeling—

Veterinary biological products; comments due by 5-17-99; published 3-18-99

COMMERCE DEPARTMENT

National Oceanic and Atmospheric Administration

Fishery conservation and management:

West Coast States and Western Pacific fisheries—

Pacific Coast groundfish; comments due by 5-20-99; published 5-5-99

West Coast salmon; comments due by 5-17-99; published 5-5-99

COMMERCE DEPARTMENT

Patent and Trademark Office

Patent cases:

Interference proceedings; consideration of interlocutory rulings; comments due by 5-17-99; published 3-16-99

CONSUMER PRODUCT SAFETY COMMISSION

Bunk beds; safety standards; comments due by 5-17-99; published 3-3-99

ENVIRONMENTAL PROTECTION AGENCY

Air programs; approval and promulgation; State plans for designated facilities and pollutants:

Kentucky; comments due by 5-20-99; published 4-20-99

Air quality implementation plans; approval and promulgation; various States:

California; comments due by 5-17-99; published 4-16-99

Illinois; comments due by 5-17-99; published 4-16-99

Minnesota; comments due by 5-19-99; published 4-19-99

Ohio; comments due by 5-20-99; published 4-20-99

Pennsylvania; comments due by 5-17-99; published 4-16-99

Tennessee; comments due by 5-20-99; published 4-20-99

Texas; comments due by 5-20-99; published 4-20-99

Air quality planning purposes; designation of areas:

California; comments due by 5-19-99; published 5-5-99

Texas; comments due by 5-17-99; published 4-16-99

Pesticides; tolerances in food, animal feeds, and raw agricultural commodities:

Potato leaf roll virus resistance gene (orf1/orf2 gene); comments due by 5-17-99; published 3-17-99

Radiation protection programs:

Idaho National Engineering and Environmental Laboratory; waste characterization program; documents availability; comments due by 5-17-99; published 4-16-99

FEDERAL COMMUNICATIONS COMMISSION

Radio stations; table of assignments:

Iowa; comments due by 5-17-99; published 4-1-99

Louisiana; comments due by 5-17-99; published 4-1-99

Nevada; comments due by 5-17-99; published 4-1-99

New Mexico; comments due by 5-17-99; published 4-5-99

South Dakota; comments due by 5-17-99; published 4-1-99

Wyoming; comments due by 5-17-99; published 4-1-99

FEDERAL RETIREMENT THRIFT INVESTMENT BOARD

Thrift savings plan:

Funds withdrawal; methods; comments due by 5-21-99; published 3-22-99

FEDERAL TRADE COMMISSION

Industry guides:

Dog and cat food industry; comments due by 5-17-99; published 3-18-99

Dog and cat food industry; correction; comments due by 5-17-99; published 4-13-99

Law book industry; comments due by 5-17-99; published 3-18-99

Law book industry; correction; comments due by 5-17-99; published 4-13-99

HEALTH AND HUMAN SERVICES DEPARTMENT

Food and Drug Administration

Food for human consumption:

Irradiation in production, processing, and handling of food—

Foods treated with ionizing radiation;

labeling requirements; comments due by 5-18-99; published 2-17-99

INTERIOR DEPARTMENT

Fish and Wildlife Service

Endangered and threatened species:

Findings on petitions, etc.—

San Diego ambrosia; comments due by 5-19-99; published 4-19-99

INTERIOR DEPARTMENT

Surface Mining Reclamation and Enforcement Office

Permanent program and abandoned mine land reclamation plan submissions:

North Dakota; comments due by 5-17-99; published 4-15-99

Ohio; comments due by 5-17-99; published 4-16-99

West Virginia; comments due by 5-20-99; published 4-20-99

NORTHEAST DAIRY COMPACT COMMISSION

Over-order price regulations:

Supply management program; hearing; comments due by 5-19-99; published 4-19-99

POSTAL SERVICE

International Mail Manual:

Priority Mail Global Guaranteed; enhanced expedited service from selected U.S. locations to selected European countries; comments due by 5-19-99; published 4-19-99

SECURITIES AND EXCHANGE COMMISSION

Securities:

Revised transfer agent form and related rule; comments due by 5-17-99; published 3-31-99

TRANSPORTATION DEPARTMENT

Air travel; nondiscrimination on basis of disability:

Wheelchairs and other assistive devices; compensation for damage; comments due by 5-18-99; published 2-17-99

TRANSPORTATION DEPARTMENT

Federal Aviation Administration

Airworthiness directives:

de Havilland; comments due by 5-21-99; published 4-23-99

Agusta S.p.A.; comments due by 5-18-99; published 3-19-99

AlliedSignal Inc.; comments due by 5-19-99; published 4-19-99

Boeing; comments due by 5-21-99; published 4-26-99

Fokker; comments due by 5-17-99; published 4-16-99

LET Aeronautical Works; comments due by 5-19-99; published 4-14-99

New Piper Aircraft, Inc.; comments due by 5-21-99; published 3-23-99

Pilatus Aircraft Ltd.; comments due by 5-19-99; published 4-14-99

Robinson Helicopter Co.; comments due by 5-21-99; published 3-22-99

Class E airspace; comments due by 5-17-99; published 4-1-99

Class E airspace; correction; comments due by 5-18-99; published 4-2-99

TRANSPORTATION DEPARTMENT

National Highway Traffic Safety Administration

Civil monetary penalties; inflation adjustment; comments due by 5-21-99; published 4-6-99

TREASURY DEPARTMENT

Customs Service

Financial and accounting procedures:

Duties, taxes, interest and fees; expanded methods of payment; comments due by 5-17-99; published 3-17-99

Vessels in foreign and domestic trades:

Vessel equipment temporarily landed for repair; comments due by 5-17-99; published 3-18-99

LIST OF PUBLIC LAWS

This is a continuing list of public bills from the current session of Congress which have become Federal laws. It may be used in conjunction with ''P L U S'' (Public Laws Update Service) on 202–523–6641. This list is also available online at http://www.nara.gov/fedreg.

The text of laws is not published in the **Federal Register** but may be ordered in ''slip law'' (individual pamphlet) form from the Superintendent of Documents, U.S. Government Printing Office, Washington, DC 20402 (phone, 202–512–1808). The text will also be made available on the Internet from GPO Access at http://www.access.gpo.gov/nara/index.html. Some laws may not yet be available.

S. 531/P.L. 106–26

To authorize the President to award a gold medal on behalf of the Congress to Rosa Parks in recognition of her contributions to the Nation. (May 4, 1999; 113 Stat. 50)

Last List May 4, 1999

Public Laws Electronic Notification Service (PENS)

PENS is a free electronic mail notification service of newly enacted public laws. To subscribe, send E-mail to **listproc@lucky.fed.gov** with the text message:

subscribe PUBLAWS-L Your Name.

Note: This service is strictly for E-mail notification of new public laws. The text of laws is not available through this service. **PENS** cannot respond to specific inquiries sent to this address.