5–11–99
Vol. 64 No. 90
Pages 25189–25418

federal register

Tuesday
May 11, 1999

Briefings on how to use the Federal Register
For information on briefings in Washington, DC, see announcement on the inside cover of this issue.

The **FEDERAL REGISTER** is published daily, Monday through Friday, except official holidays, by the Office of the Federal Register, National Archives and Records Administration, Washington, DC 20408, under the Federal Register Act (44 U.S.C. Ch. 15) and the regulations of the Administrative Committee of the Federal Register (1 CFR Ch. I). The Superintendent of Documents, U.S. Government Printing Office, Washington, DC 20402 is the exclusive distributor of the official edition.

The **Federal Register** provides a uniform system for making available to the public regulations and legal notices issued by Federal agencies. These include Presidential proclamations and Executive Orders, Federal agency documents having general applicability and legal effect, documents required to be published by act of Congress, and other Federal agency documents of public interest.

Documents are on file for public inspection in the Office of the Federal Register the day before they are published, unless the issuing agency requests earlier filing. For a list of documents currently on file for public inspection, see http://www.nara.gov/fedreg.

The seal of the National Archives and Records Administration authenticates the Federal Register as the official serial publication established under the Federal Register Act. Under 44 U.S.C. 1507, the contents of the **Federal Register** shall be judicially noticed.

The **Federal Register** is published in paper and on 24x microfiche. It is also available online at no charge as one of the databases on GPO Access, a service of the U.S. Government Printing Office.

The online edition of the **Federal Register** is issued under the authority of the Administrative Committee of the Federal Register as the official legal equivalent of the paper and microfiche editions (44 U.S.C. 4101 and 1 CFR 5.10). It is updated by 6 a.m. each day the **Federal Register** is published and it includes both text and graphics from Volume 59, Number 1 (January 2, 1994) forward.

GPO Access users can choose to retrieve online **Federal Register** documents as TEXT (ASCII text, graphics omitted), PDF (Adobe Portable Document Format, including full text and all graphics), or SUMMARY (abbreviated text) files. Users should carefully check retrieved material to ensure that documents were properly downloaded.

On the World Wide Web, connect to the **Federal Register** at http://www.access.gpo.gov/nara. Those without World Wide Web access can also connect with a local WAIS client, by Telnet to swais.access.gpo.gov, or by dialing (202) 512-1661 with a computer and modem. When using Telnet or modem, type swais, then log in as guest with no password.

For more information about GPO Access, contact the GPO Access User Support Team by E-mail at gpoaccess@gpo.gov; by fax at (202) 512–1262; or call (202) 512–1530 or 1–888–293–6498 (toll free) between 7 a.m. and 5 p.m. Eastern time, Monday–Friday, except Federal holidays.

The annual subscription price for the **Federal Register** paper edition is $555, or $607 for a combined **Federal Register,** Federal Register Index and List of CFR Sections Affected (LSA) subscription; the microfiche edition of the **Federal Register** including the Federal Register Index and LSA is $220. Six month subscriptions are available for one-half the annual rate. The charge for individual copies in paper form is $8.00 for each issue, or $8.00 for each group of pages as actually bound; or $1.50 for each issue in microfiche form. All prices include regular domestic postage and handling. International customers please add 25% for foreign handling. Remit check or money order, made payable to the Superintendent of Documents, or charge to your GPO Deposit Account, VISA, MasterCard or Discover. Mail to: New Orders, Superintendent of Documents, P.O. Box 371954, Pittsburgh, PA 15250–7954.

There are no restrictions on the republication of material appearing in the **Federal Register.**

How To Cite This Publication: Use the volume number and the page number. Example: 64 FR 12345.

SUBSCRIPTIONS AND COPIES

PUBLIC	
Subscriptions:	
Paper or fiche	**202–512–1800**
Assistance with public subscriptions	**512–1806**
General online information	**202–512–1530; 1–888–293–6498**
Single copies/back copies:	
Paper or fiche	**512–1800**
Assistance with public single copies	**512–1803**
FEDERAL AGENCIES	
Subscriptions:	
Paper or fiche	**523–5243**
Assistance with Federal agency subscriptions	**523–5243**

FEDERAL REGISTER WORKSHOP

THE FEDERAL REGISTER: WHAT IT IS AND HOW TO USE IT

FOR: Any person who uses the Federal Register and Code of Federal Regulations.

WHO: Sponsored by the Office of the Federal Register.

WHAT: Free public briefings (approximately 3 hours) to present:

1. The regulatory process, with a focus on the Federal Register system and the public's role in the development regulations.
2. The relationship between the Federal Register and Code of Federal Regulations.
3. The important elements of typical Federal Register documents.
4. An introduction to the finding aids of the FR/CFR system.

WHY: To provide the public with access to information necessary to research Federal agency regulations which directly affect them. There will be no discussion of specific agency regulations.

WASHINGTON, DC

WHEN: May 18, 1999 at 9:00 am.

WHERE: Office of the Federal Register
Conference Room
800 North Capitol Street, NW.
Washington, DC
(3 blocks north of Union Station Metro)

RESERVATIONS: 202–523–4538

Printed on recycled paper.

Contents

Federal Register

Vol. 64, No. 90

Tuesday, May 11, 1999

Agency for International Development
RULES
Acquisition regulations:
Miscellaneous amendments; correction, 25405

Agency for Toxic Substances and Disease Registry
NOTICES
Reports and guidance documents; availability , etc.:
Public health activities for fiscal years 1999 and 2000 at U.S. Department of Energy sites; draft agenda, 25345

Agricultural Marketing Service
RULES
Milk marketing orders:
Iowa, 25193–25194

Agricultural Research Service
NOTICES
Patent licenses; non-exclusive, exclusive, or partially exclusive:
Aqua-Tainer Co., 25270
Eco Soil Systems, Inc., 25270

Agriculture Department
See Agricultural Marketing Service
See Agricultural Research Service
See Food and Nutrition Service
See Forest Service

Alcohol, Tobacco and Firearms Bureau
NOTICES
Agency information collection activities:
Proposed collection; comment request, 25394–25400

Army Department
See Engineers Corps
NOTICES
Privacy Act:
Systems of records, 25308–25310

Centers for Disease Control and Prevention
NOTICES
Grants and cooperative agreements; availability, etc.:
Energy-related public health activities; community based organizations, 25346–25347
Varicella surveillance and epidemiologic studies, 25347–25349
Reports and guidance documents; availability, etc.:
Public health activities for fiscal years 1999 and 2000 at U.S. Department of Energy sites; draft agenda, 25345

Coast Guard
RULES
Merchant marine officers and seamen:
Management information system requirements; chemical drug testing
Correction, 25405

Commerce Department
See Economics and Statistics Administration
See International Trade Administration
See National Oceanic and Atmospheric Administration
See Patent and Trademark Office

Copyright Office, Library of Congress
RULES
Copyright arbitration royalty panel rules and procedures:
Payment of arbitrators; distribution proceedings, 25201–25202
NOTICES
Satellite royalty funds for 1992, 1993, 1994, and 1995; ascertainment of controversy

Corporation for National and Community Service
PROPOSED RULES
Government in the Sunshine Act; implementation, 25260–25263

Defense Department
See Army Department
See Defense Logistics Agency
See Engineers Corps
See Navy Department
NOTICES
Arm sales notification; transmittal letter, etc., 25295–25299
Meetings:
Defense Acquisition University Board of Visitors, 25299
Privacy Act:
Systems of records, 25299–25308
Invalid Status Code
Freedom of Information Act; implementation
Correction, 25405

Defense Logistics Agency
NOTICES
Privacy Act:
Systems of records, 25310–25311

Drug Enforcement Administration
PROPOSED RULES
Schedules of controlled substances:
Zalepon; placement into Schedule IV; correction, 25405

Economics and Statistics Administration
NOTICES
Committees; establishment, renewal, termination, etc.:
Secretary's 2000 Census Advisory Committee, 25274–25275

Employment and Training Administration
NOTICES
Adjustment assistance:
Advanced Energy Industries, Inc., 25367
Braeburn Alloy Steel, Inc., 25367
Breed Tech/Morton Bendix et al., 25367–25368
Buster Brown Apparel, Inc., 25368–25369
Fashionland, Inc., 25369
Guilford Mills, 25369
Lehigh Portland Cement, 25369
Miller Brothers Indutries, Inc., 25370
Paxar Woven Label, 25370
Pluma, Inc., 25370
Salant Corp., 25370–25371
NAFTA transitional adjustment assistance:
Weinman Pump & Supply Co., et al., 25371–25374

Energy Department
See Federal Energy Regulatory Commission
See Western Area Power Administration
NOTICES
Applications, hearings, determinations, etc.:
PDI New England, Inc., 25315–25316

Engineers Corps
NOTICES
Environmental statements; notice of intent:
Broadwater Resort Facility, Biloxi, MS, 25311–25312

Environmental Protection Agency
RULES
Air quality implementation plans; approval and promulgation; various States:
Nevada, 25210–25213
Utah, 25214
Hazardous waste:
Land disposal restrictions—
Wood preserving wastes, metal wastes, zinc micronutrient fertilizers et al., 25407–25417
PROPOSED RULES
Hazardous waste program authorizations:
New Jersey, 25258–25260
NOTICES
Agency information collection activities:
Submission for OMB review; comment request, 25334–25335
Clean Air Act:
Acid rain program—
Small diesel refineries, 25335–25336
State operating permits programs—
Washington, 25336
Meetings:
Environmental Policy and Technology National Advisory Council, 25336–25337
State and Tribal Toxics Action, 25337

Executive Office of the President
See Presidential Documents

Farm Credit Administration
NOTICES
Meetings; Sunshine Act, 25337–25338

Federal Aviation Administration
RULES
Airworthiness directives:
Boeing, 25194–25198
Eurocopter France, 25198–25200
Pilatus Aircraft Ltd., 25200–25201
PROPOSED RULES
Airworthiness directives:
Fairchild Aircraft, Inc., 25218–25219
Class E airspace, 25220–25223
NOTICES
Advisory circulars; availability, etc.:
Integrating helicopter and tiltrotor assets into disaster relief planning, 25390–25391
Committees; establishment, renewal, termination, etc.:
RTCA, Inc., 25391
Meetings:
RTCA, Inc., 25391

Federal Communications Commission
NOTICES
Agency information collection activities:
Proposed collection; comment request, 25338–25340
Submission for OMB review; comment request , 25340–25341
Common carrier services:
Pay telephone reclassification and compensation proceeding; inmate issues; comment request, 25341–25342
Meetings; Sunshine Act, 25342

Federal Energy Regulatory Commission
NOTICES
Environmental statements; availability, etc.:
Nantahala Power & Light Co., 25318
Environmental statements; notice of intent:
Holyoke Water Power Co. et al., 25318–25319
Hydroelectric applications, 25319–25320
Applications, hearings, determinations, etc.:
Alice Falls Corp., 25316–25317
Cleveland Electric Illuminating Co. et al., 25317
Natural Gas Pipeline Co. of America, 25317–25318
Williams Gas Pipelines Central, Inc., 25318

Federal Reserve System
NOTICES
Agency information collection activities:
Reporting and recordkeeping requirements, 25342–25344
Banks and bank holding companies:
Formations, acquisitions, and mergers, 25344
Permissible nonbanking activities, 25344
Meetings; Sunshine Act, 25344–25345

Fish and Wildlife Service
RULES
Endangered and threatened species:
Stones river bladderpod, 25216
PROPOSED RULES
Endangered and threatened species:
Columbian white-tailed deer, 25263–25269
NOTICES
Endangered and threatened species:
Gabbro soil plants, 25362–25363

Food and Drug Administration
NOTICES
Agency information collection activities:
Proposed collection; comment request
Correction, 25405
Human drugs
Patent extension; regulatory review period determinations—
GenESA, 25350
Patent extension; regulatory review period determinations—
Aggrastat, 25350–25351

Food and Nutrition Service
NOTICES
Food stamp program:
Alaska, Hawaii, Guam and Virgin Islands; maximum allotments, 25270–25272
Maximum allotments and income eligibility standards and deductions, 25272–25274

Forest Service
NOTICES
Environmental statements; availability, etc.:
Tongass National Forest, AK, 25274

Health and Human Services Department
See Agency for Toxic Substances and Disease Registry

See Centers for Disease Control and Prevention
See Food and Drug Administration
See Health Care Financing Administration
See National Institutes of Health
NOTICES
Meetings:
Vital and Health Statistics National Committee, 25345

Health Care Financing Administration
NOTICES
Medicaid:
Program issuances and coverage decisions; quarterly listing, 25351–25359

Interior Department
See Fish and Wildlife Service
See Land Management Bureau
See Minerals Management Service
See Reclamation Bureau

Internal Revenue Service
PROPOSED RULES
Income taxes:
Determining earned income credit eligibility; paid preparer due diligence requirements; hearing cancellation, 25223
NOTICES
Agency information collection activities:
Proposed collection; comment request, 25400–25402
Meetings:
Brooklyn District Citizen Advocacy Panel, 25402
Pacific-Northwest District Citizen Advocacy Panel, 25402

International Trade Administration
NOTICES
Antidumping:
Cased pencils from—
China, 25275–25276
Magnesium, pure from—
Canada, 25276–25277
Countervailing duties:
Live cattle from—
Canada, 25277–25288
Stainless steel plate in coils from—
Various countries, 25288–25289

Justice Department
See Drug Enforcement Administration

Labor Department
See Employment and Training Administration
NOTICES
Agency information collection activities:
Submission for OMB review; comment request, 25366
Meetings:
Trade Negotiations and Trade Policy Advisory Committee, 25366–25367

Land Management Bureau
NOTICES
Survey plat filings:
Idaho, 25363
Withdrawal and reservation of lands:
Montana, 25363–25364

Library of Congress
See Copyright Office, Library of Congress

Maritime Administration
NOTICES
Agency information collection activities:
Proposed collection; comment request, 25391–25392

Minerals Management Service
NOTICES
Outer Continental Shelf; oil, gas, and sulphur operations:
Notices to leasees and operators; list, 25364–25365

National Aeronautics and Space Administration
RULES
Acquisition regulations:
Contracting by negotiation, 25214–25216

National Credit Union Administration
NOTICES
Agency information collection activities:
Submission for OMB review; comment request, 25375–25376

National Highway Traffic Safety Administration
NOTICES
Meetings:
Safety performance standards—
Vehicle regulatory program, 25392
Motor vehicle safety standards:
Nonconforming vehicles—
Importation elgibility; determinations; correction, 25392

National Institutes of Health
NOTICES
Agency information collection activities:
Proposed collection; comment request, 25360–25361
Meetings:
NationalInstitute of Arthritis and Musculoskeletal and Skin Diseases, 25361
Recombinant DNA molecules research:
Actions under guidelines, 25361–25362

National Oceanic and Atmospheric Administration
RULES
Fishery conservation and management:
Alaska; fisheries of Exclusive Economic Zone—
Pacific cod, 25216–25217
NOTICES
Fishery conservation and management:
Halibut and sablefish fisheries quota-share loan program, 25289–25294
Permits:
Marine mammals, 25294–25295

Navy Department
NOTICES
Privacy Act:
Systems of records, 25312–25315

Nuclear Regulatory Commission
NOTICES
Meetings; Sunshine Act, 25384–25385
Applications, hearings, determinations, etc.:
Grace, Michael P., estate, 25376
Thermal Science, Inc., 25376–25383
Wolf Creek Nuclear Operating Corp., 25383–25384

Patent and Trademark Office
PROPOSED RULES
Trademark Law Treaty Implementation Act; implementation, 25223–25246

Presidential Documents
PROCLAMATIONS
Special observances:
Mother's Day (Proc. 7194), 25191
Prayer, National Day of (Proc. 7193), 25189–25190

Public Health Service
See Agency for Toxic Substances and Disease Registry
See Centers for Disease Control and Prevention
See Food and Drug Administration
See National Institutes of Health

Reclamation Bureau
NOTICES
Meetings:
Yakima River Basin Water Enhancement Project Conservation Advisory Group, 25365–25366

Securities and Exchange Commission
NOTICES
Agency information collection activities:
Proposed collection; comment request, 25385–25386
Self-regulatory organizations; proposed rule changes:
National Association of Securities Dealers, Inc., 25386
New York Stock Exchange, Inc., 25387–25388
Philadelphia Stock Exchange, Inc., 25388–25389

State Department
NOTICES
Agency information collection activities:
Submission for OMB review; comment request, 25389
International Traffic in Arms regulations; statutory debarment, 25389–25390

Surface Transportation Board
NOTICES
Motor carriers:
Control exemptions—
Coach USA, Inc., 25392–25394

Toxic Substances and Disease Registry Agency
See Agency for Toxic Substances and Disease Registry

Transportation Department
See Coast Guard
See Federal Aviation Administration
See Maritime Administration
See National Highway Traffic Safety Administration
See Surface Transportation Board
NOTICES
Aviation proceedings:
Agreements filed, etc., 25390
Certificates of public convenience and necessity and foreign air carrier permits; weekly applications, 25390

Treasury Department
See Alcohol, Tobacco and Firearms Bureau
See Internal Revenue Service

Veterans Affairs Department
RULES
Disabilities rating schedule:
Ear and other sense organ diseases, 25202–25210
PROPOSED RULES
Disabilities rating schedule:
Eye disabilities, 25246–25258
NOTICES
Agency information collection activities:
Submission for OMB review; comment request, 25403–25404

Western Area Power Administration
NOTICES
Power rate adjustments:
Amistad and Falcon Projects, 25320–25323
Desert Southwest Customer Service Region, 25323–25334

Separate Parts In This Issue

Part II
Environmental Protection Agency, 25407–25417

Reader Aids
Consult the Reader Aids section at the end of this issue for phone numbers, online resources, finding aids, reminders, and notice of recently enacted public laws.

CFR PARTS AFFECTED IN THIS ISSUE

A cumulative list of the parts affected this month can be found in the Reader Aids section at the end of this issue.

3 CFR

Proclamations:

7193 25189
7194 25191

7 CFR

1079 25193

14 CFR

39 (4 documents) 25194, 25197, 25198, 25200

Proposed Rules:

39 25218
71 (3 documents) 25220, 25221, 25222

21 CFR

Proposed Rules:

1308 25407

26 CFR

Proposed Rules:

1 25223

32 CFR

290 25407

37 CFR

251 25201

Proposed Rules:

1 25223
2 25223
3 25223
6 25223

38 CFR

4 25202

Proposed Rules:

4 25246

40 CFR

52 (2 documents) 25210, 25214
261 25408
262 25408
268 25408

Proposed Rules:

271 25258

45 CFR

Proposed Rules:

2505 25260

46 CFR

16 25407

48 CFR

715 25407
1815 25214
1816 25214
1819 25214
1852 25214

50 CFR

17 25216
679 25216

Proposed Rules:

17 25263

Federal Register
Vol. 64, No. 90
Tuesday, May 11, 1999

Presidential Documents

Title 3—

The President

Proclamation 7193 of May 5, 1999

National Day of Prayer, 1999

By the President of the United States of America

A Proclamation

From our earliest days, whether in times of joy or of challenge, Americans have raised their hearts and voices in prayer. On the Great Plains, American Indians prayed for peace and for blessings upon their children and their friends. The Pilgrims prayed from the moment they first set foot on this continent. Our Nation's founders prayed as they forged a democracy based on freedom and respect for human rights. Our military leaders and the millions of men and women who have served in our Armed Forces have prayed in the midst of every conflict in which our Nation has fought. And so it continues to this day, as Americans of every race, background, and creed pray in churches, mosques, synagogues, temples, and their own homes for guidance, wisdom, and courage in confronting the challenges before us.

We can pray openly thanks to the religious freedom guaranteed for us by the First Amendment to the Constitution. That freedom and the diversity of faiths it has fostered are among America's most important achievements. They have made our Nation a beacon for generations of people from around the world who have traveled here seeking to worship according to their conscience without fear of coercion or constraint.

On this National Day of Prayer, observed so soon after the tragedy in Littleton, Colorado, and the tornadoes that devastated communities in Kansas, Texas, and Oklahoma, we are more keenly aware than ever of the power and solace we find in prayer. Throughout the days that have followed the deaths of and injury to so many of our fellow citizens, Americans have united in prayer for those who died or were harmed, for the comfort and peace of their families, for the wisdom to heal our society, and for the strength to overcome such tragedies. For as Martin Luther King, Jr., so eloquently said, ''When our days become dreary with low-hovering clouds of despair, and when our nights become darker than a thousand midnights, let us remember that there is a creative force in this universe . . . a power that is able to make a way out of no way and transform dark yesterdays into bright tomorrows.''

The Congress, by Public Law 100–307, has called on our citizens to reaffirm the role of prayer in our society and to honor the religious diversity our freedom permits by recognizing annually a ''National Day of Prayer.''

NOW, THEREFORE, I, WILLIAM J. CLINTON, President of the United States of America, do hereby proclaim May 6, 1999, as a National Day of Prayer. I encourage the citizens of this great Nation to pray, each in his or her own manner, seeking strength from God to face the problems of today, requesting guidance for the uncertainties of tomorrow, and giving thanks for the rich blessings that our country has enjoyed throughout its history.

IN WITNESS WHEREOF, I have hereunto set my hand this fifth day of May, in the year of our Lord nineteen hundred and ninety-nine, and of the Independence of the United States of America the two hundred and twenty-third.

William J. Clinton

[FR Doc. 99–12012
Filed 5–10–99; 8:45 am]
Billing code 3195–01–P

Presidential Documents

Proclamation 7194 of May 5, 1999

Mother's Day 1999

By the President of the United States of America

A Proclamation

There is nothing more precious than the bond between a mother and her child. With unconditional love and infinite patience, our mothers nurture us throughout our lives, helping us to meet life's challenges and achieve our dreams. Mothers—whether biological or adoptive, foster or stepmothers—are the cornerstones of our families, and our families are the foundation of our Nation. Mothers are the bridges that link America's best promise to its brightest reality.

The role of women has changed dramatically in the last half-century, bringing exciting new opportunities as well as fresh challenges. Today, our mothers can be mayors and managers, heads of households and homemakers—yet they still make us the center of their lives and the focus of their love. Regardless of whether they work inside or outside the home, we still turn to our mothers when we need reassurance, advice, or comfort. Devotion and love, loyalty and selflessness—these are the traits that define motherhood.

For 85 years, we have reserved the second Sunday in May as a special day to honor our mothers for their strength, nobility, and generosity. In so many ways, we owe our successes—and those of our Nation—to the loving influence of our mothers. Although we can never repay them for their gift of life and love, we can honor them in person or cherish their beloved memory. The Congress, by a joint resolution approved May 8, 1914 (38 Stat. 770), has designated the second Sunday in May of each year as ''Mother's Day'' and requested the President to call for its appropriate observance.

NOW, THEREFORE, I, WILLIAM J. CLINTON, President of the United States of America, do hereby proclaim May 9, 1999, as Mother's Day. I urge all Americans to express their love and appreciation for their mothers on this day and every day and to observe the day with appropriate ceremonies and activities.

IN WITNESS WHEREOF, I have hereunto set my hand this fifth day of May, in the year of our Lord nineteen hundred and ninety-nine, and of the Independence of the United States of America the two hundred and twenty-third.

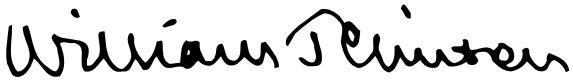

[FR Doc. 99–12013

Filed 5–10–99; 8:45 am]

Billing code 3195–01–P

Rules and Regulations

Federal Register
Vol. 64, No. 90
Tuesday, May 11, 1999

This section of the FEDERAL REGISTER contains regulatory documents having general applicability and legal effect, most of which are keyed to and codified in the Code of Federal Regulations, which is published under 50 titles pursuant to 44 U.S.C. 1510.

The Code of Federal Regulations is sold by the Superintendent of Documents. Prices of new books are listed in the first FEDERAL REGISTER issue of each week.

DEPARTMENT OF AGRICULTURE

Agricultural Marketing Service

7 CFR Part 1079

[DA–99–02]

Milk in the Iowa Marketing Area

AGENCY: Agricultural Marketing Service, USDA.

ACTION: Final rule.

SUMMARY: This document revises certain sections of the Iowa Federal milk order for the months of April, May, and June 1999 in regard to the percentage of a supply plant's receipts that must be delivered to fluid milk plants in order to qualify the supply plant for pooling. A pool supply plant regulated under the Iowa order (Order 79) requested that the percentages for the months of April through August 1999 be reduced by 10 percentage points, from 20 percent to 10 percent. In a separate action, the period of time for commenting on the proposed revision for the months of June, July and August 1999 is being reopened and extended.

EFFECTIVE DATES:

1. The amendment numbered 2 is effective April 1, 1999, through May 31, 1999.

2. The amendment numbered 3 is effective June 1, 1999, through June 30, 1999.

FOR FURTHER INFORMATION CONTACT: Constance M. Brenner, Marketing Specialist, USDA/AMS/Dairy Programs, Order Formulation Branch, Room 2971, South Building, P.O. Box 96456, Washington, DC 20090–6456, (202) 720–2357, e-mail address connie.brenner@usda.gov.

SUPPLEMENTARY INFORMATION: Prior document in this proceeding:

Notice of Proposed Rule: Issued April 14, 1999; published April 19, 1999 (64 FR 19071).

The Department is issuing this final rule in conformance with Executive Order 12866.

This final rule has been reviewed under Executive Order 12988, Civil Justice Reform. This rule is not intended to have a retroactive effect. This rule will not preempt any state or local laws, regulations, or policies, unless they present an irreconcilable conflict with this rule.

The Agricultural Marketing Agreement Act of 1937 (the ''Act''), as amended (7 U.S.C. 601–674), provides that administrative proceedings must be exhausted before parties may file suit in court. Under section 608c(15)(A) of the Act, any handler subject to an order may request modification or exemption from such order by filing with the Secretary a petition stating that the order, any provision of the order, or any obligation imposed in connection with the order is not in accordance with the law. A handler is afforded the opportunity for a hearing on the petition. After a hearing, the Secretary would rule on the petition. The Act provides that the district court of the United States in any district in which the handler is an inhabitant, or has its principal place of business, has jurisdiction in equity to review the Secretary's ruling on the petition, provided a bill in equity is filed not later than 20 days after the date of the entry of the ruling.

Small Business Consideration

In accordance with the Regulatory Flexibility Act (5 U.S.C. 601 *et seq.*), the Agricultural Marketing Service has considered the economic impact of this action on small entities and has certified that this rule will not have a significant economic impact on a substantial number of small entities. For the purpose of the Regulatory Flexibility Act, a dairy farm is considered a ''small business'' if it has an annual gross revenue of less than $500,000, and a dairy products manufacturer is a ''small business'' if it has fewer than 500 employees. For the purposes of determining which dairy farms are ''small businesses,'' the $500,000 per year criterion was used to establish a production guideline of 326,000 pounds per month. Although this guideline does not factor in additional monies that may be received by dairy producers, it should be an inclusive standard for most ''small'' dairy farmers. For purposes of determining a handler's size, if the plant is part of a larger company operating multiple plants that collectively exceed the 500-employee limit, the plant will be considered a large business even if the local plant has fewer than 500 employees.

For the month of February 1999, 3,788 dairy farmers were producers under the Iowa order. Of these, 3,714 producers (i.e., 98 percent) were considered small businesses, having monthly milk production under 326,000 pounds. A further breakdown of the monthly milk production of the producers on the order during February 1999 was as follows: 2,804 produced less than 100,000 pounds of milk; 776 produced between 100,000 and 200,000; 134 produced between 200,000 and 326,000; and 74 produced over 326,000 pounds. During the same month, 11 handlers were pooled under the order. Five were considered small businesses.

The reduction of the required supply plant shipping percentage by 10 percentage points for the months of April and May and by 5 percentage points for the month of June 1999 would allow the milk of producers traditionally associated with the Iowa market to continue to be pooled and priced under the order. The revision would lessen the likelihood that more milk shipments to pool plants might be required under the order than are actually needed to supply the fluid milk needs of the market and would result in savings in hauling costs for handlers and producers.

This revision is issued pursuant to the provisions of the Agricultural Marketing Agreement Act and the provisions of § 1079.7(b)(1) of the Iowa Federal milk order.

Issuance of Notice of Proposed Revision

Notice of proposed rulemaking was published in the **Federal Register** (64 FR 19071) concerning a proposed reduction in the percentage of a supply plant's receipts that must be delivered to fluid milk plants to qualify a supply plant for pooling under the Iowa order. The revisions were proposed to be effective for the months of April through August 1999. The public was afforded the opportunity to comment on the proposed reduction by submitting written data, views and arguments by April 26, 1999.

One comment partly supporting the proposed revision was received.

Statement of Consideration

This document revises certain provisions of the Iowa Federal milk order in regard to the percentage of a supply plant's receipts of milk that must be delivered to fluid milk plants in order to qualify the supply plant for pooling. A proposal to reduce the percentages by 10 percentage points from 20 percent to 10 percent for the months of April through August 1999 was requested by Beatrice Cheese, Inc. (Beatrice), a proprietary manufacturer of dairy products in Fredericksburg, Iowa, regulated under Order 79 as a pool supply plant. Beatrice states that the decrease is warranted due to the fact that raw milk supplies from outside of Iowa's traditional procurement area result in a supply of milk for the market that exceeds the needs of the fluid milk plants in Federal Order 79, and that these available supplies have replaced milk shipped to distributing plants by Beatrice. Beatrice further contends that the reduction would allow the milk of dairymen who historically have supplied the market to continue to be pooled under the Federal order and would also prevent uneconomic milk movements.

Comments from Anderson-Erickson Dairy Company, a pool distributing plant regulated under Order 79, did not oppose the proposed 10-percentage point reduction for the months of April and May, but proposed a reduction of no more than 5 percentage points for June and opposed immediate action to reduce the percentage for the months of July and August 1999. According to Anderson-Erickson, the milk supply situation in Iowa is volatile and the summer could likely lead to a marketing scenario different from the one posited by Beatrice.

After consideration of all relevant material, including the proposal set forth in the aforesaid notice and other available information, it is hereby found and determined that the supply plant shipping percentage requirements for pool supply plants § 1079.7(b) should be decreased 10 percentage points during the months of April and May 1999, and 5 percentage points during June 1999. The lesser reduction for the month of June reflects historical production patterns. The volume of milk associated with the Iowa market generally starts to decline for the month of June and declines even further during the months of July and August. In a separate document published in the **Federal Register**, the time for filing comments regarding the proposed revision of the shipping plant percentage under Order 79 is being reopened and extended until June 14. This further opportunity to submit comments should be sufficient to determine whether a further reduction in the pool supply plant shipping percentage of 5 percent is appropriate for June and whether any reduction is necessary for the months of July and August 1999.

It is hereby found and determined that 30 days' notice of the effective date hereof is impractical, unnecessary, and contrary to the public interest in that:

(a) This revision is necessary to reflect current marketing conditions and to maintain orderly marketing conditions in the marketing area for the months of April 1999 through June 1999;

(b) This revision does not require of persons affected substantial or extensive preparation prior to the effective date; and

(c) Notice of the proposed revision was given interested parties and they were afforded opportunity to file written data, views, or arguments concerning this temporary revision. One comment supporting the revision was received.

Therefore, good cause exists for making this temporary revision effective less than 30 days from the date of publication in the **Federal Register**.

List of Subjects in 7 CFR Part 1079

Milk marketing orders.

For the reasons set forth in the preamble, 7 CFR Part 1079 is amended as follows:

PART 1079—MILK IN THE IOWA MARKETING AREA

1. The authority for 7 CFR Part 1079 continues to read as follows:

Authority: 7 U.S.C. 601–674.

§ 1079.7 [Amended]

2. In § 1079.7, paragraph (b), the introductory text is amended by revising the words ''20 percent'' to read ''10 percent'' effective April 1, 1999, through May 31, 1999.

3. In § 1079.7, paragraph (b), the introductory text is amended by revising the words ''20 percent'' to read ''15 percent'' effective June 1, 1999, through June 30, 1999.

Dated: May 5, 1999.

Richard M. McKee,

Deputy Administrator, Dairy Programs.

[FR Doc. 99–11767 Filed 5–7–99; 8:45 am]

BILLING CODE 3410–02–P

DEPARTMENT OF TRANSPORTATION

Federal Aviation Administration

14 CFR Part 39

[Docket No. 97–NM–100–AD; Amendment 39–11162; AD 99–10–09]

RIN 2120–AA64

Airworthiness Directives; Boeing Model 747–100, 747–200, and 747–SP Series Airplanes and Military Type E–4B Airplanes

AGENCY: Federal Aviation Administration, DOT.

ACTION: Final rule.

SUMMARY: This amendment adopts a new airworthiness directive (AD), applicable to certain Boeing Model 747–100, –200, and 747–SP series airplanes and military type E–4B airplanes, that requires repetitive inspections to detect cracking of the wing front spar web, and repair of cracked structure. This amendment also provides for optional terminating action for the repetitive inspection requirements. This amendment is prompted by reports indicating that fatigue cracks were found on the aft surface of the wing front spar web. The actions specified by this AD are intended to detect and correct such fatigue cracking, which could result in a fuel leak, and consequent increased risk of a fire.

DATES: Effective June 15, 1999.

The incorporation by reference of certain publications listed in the regulations is approved by the Director of the **Federal Register** as of June 15, 1999.

ADDRESSES: The service information referenced in this AD may be obtained from Boeing Commercial Airplane Group, P.O. Box 3707, Seattle, Washington 98124–2207. This information may be examined at the Federal Aviation Administration (FAA), Transport Airplane Directorate, Rules Docket, 1601 Lind Avenue, SW., Renton, Washington; or at the Office of the **Federal Register**, 800 North Capitol Street, NW., suite 700, Washington, DC.

FOR FURTHER INFORMATION CONTACT: Tamara L. Anderson, Aerospace Engineer, Airframe Branch, ANM–120S, FAA, Transport Airplane Directorate, Seattle Aircraft Certification Office, 1601 Lind Avenue, SW., Renton, Washington 98055–4056; telephone (425) 227–2771; fax (425) 227–1181.

SUPPLEMENTARY INFORMATION: A proposal to amend part 39 of the Federal Aviation Regulations (14 CFR part 39) to include an airworthiness directive (AD) that is applicable to certain Boeing

Model 747–100, –200, and 747–SP series airplanes and military type E–4B airplanes was published in the **Federal Register** on May 28, 1998 (63 FR 29151). That action proposed to require repetitive inspections to detect cracking of the wing front spar web, and repair of cracked structure. That proposal also provided for optional terminating action for the repetitive inspection requirements.

Comments

Interested persons have been afforded an opportunity to participate in the making of this amendment. Due consideration has been given to the comments received.

One commenter supports the proposed rule, and one commenter has no objection to the proposed rule.

Request to Allow Use of Additional Service Information

Two commenters request that the proposed rule be revised to allow inspection and modification of the wing front spar web to be accomplished in accordance with the original issue of Boeing Alert Service Bulletin 747–57A2303, dated December 19, 1996. The notice of proposed rulemaking (NPRM) proposed to require inspection and modification of the wing front spar web in accordance with only Boeing Service Bulletin 747–57A2303, Revision 1, dated September 25, 1997. The commenters point out that Boeing Service Bulletin 747–57A2303, Revision 1, states that no more work is necessary for airplanes inspected or modified in accordance with the original issue of the service bulletin. One of the commenters states that revising the final rule to allow inspection and modification of the wing front spar web in accordance with the original issue of the service bulletin would preclude the need for affected operators to obtain approval for an alternative method of compliance.

The FAA concurs with the commenters' request to allow inspection and modification of the wing front spar web in accordance with the original issue of Boeing Alert Service Bulletin 747–57A2303. The FAA has reviewed the original issue of the service bulletin and determined that the procedures in the original issue are substantially similar to those described in Revision 1. Therefore, **"NOTE 2"** has been added to this final rule to specify that inspections and modifications accomplished prior to the effective date of this AD in accordance with the original issue of Boeing Alert Service Bulletin 747–57A2303 are considered acceptable for compliance with this AD.

Request to Terminate Repetitive Inspections Required by AD 95–02–15

One commenter requests that the proposal (Docket number 97–NM–100–AD) be revised to state that, if the terminating action proposed in the NPRM (replacement of the wing front spar web with a new shot-peened wing front spar web) is accomplished, certain inspections outboard of front spar station inboard (FSSI) 669 that are currently required by AD 95–02–15, amendment 39–9134 (60 FR 9613, March 21, 1995), are no longer necessary. The commenter points out that the subject area in the proposal overlaps considerably with the subject area of AD 95–02–15. The commenter also states that a similar revision should be made to the NPRM for docket number 97–NM–82–AD, which proposed the supersedure of AD 95–02–15, to state that certain inspections outboard of FSSI 669 are no longer necessary if the replacement of the wing front spar web with a new shot-peened wing front spar web is accomplished in accordance with this AD. The commenter states that addressing the area of overlap in the final rule would preclude the need for affected operators to obtain FAA approval for an alternative method of compliance for the inspections of the subject area of AD 95–02–15.

The FAA partially concurs with the commenter's request to revise the NPRM's for docket numbers 97–NM–82–AD and 97–NM–100–AD. On July 15, 1998, the FAA issued AD 98–15–21, amendment 39–10672 (63 FR 39487, dated July 23, 1998), which supersedes AD 95–02–15. Because that AD has already been issued, no revision to that final rule will be made at this time. However, the FAA concurs that accomplishment of the optional terminating action specified in this final rule would eliminate the need for inspections in accordance with AD 98–15–21 for the modified area only (i.e., FSSI 669 to FSSI 697 inclusive). Therefore, paragraph (c) of this final rule has been revised to state that replacement of the affected wing front spar web with a new shot-peened wing front spar web in accordance with Boeing Service Bulletin 747–57A2303, Revision 1, constitutes terminating action for repetitive inspections in accordance with AD 98–15–21 for the modified area only. In addition, **"NOTE 3"** has been added to this final rule to clarify that the area subject to the optional terminating action specified in paragraph (c) of this final rule overlaps with part of the wing front spar that is the subject of AD 98–15–21.

Request to Approve Alternative Method of Compliance for Terminating Action

One commenter requests that the proposed rule be revised to allow modifications of the wing front spar web accomplished previously in accordance with Boeing Service Letter 747–SL–57–084–C, dated October 12, 1996, and Boeing Repair Drawing 112U8040, to be considered terminating action for the requirements of this AD. The commenter states that such a modification was coordinated through the manufacturer, and the commenter has accomplished the modification on several of its airplanes.

The FAA does not concur with the commenter's request to approve an alternative method of compliance for the terminating action. The service letter and repair drawing referenced by the commenter are not approved by the FAA. Therefore, the FAA finds that modifications accomplished in accordance with these data may not be adequate to ensure that the unsafe condition is adequately addressed. In addition, the FAA finds that adding such an alternative method of compliance for the terminating action to the final rule would unduly complicate this AD action and may be confusing to some operators. However, the operator may request approval of an alternative method of compliance in accordance with paragraph (d) of the final rule. No change to the final rule is necessary in this regard.

Explanation of Changes Made to the Proposal

The FAA has revised paragraph (b)(2) of the final rule to add a provision that allows repair of any crack in the subject area to be accomplished in accordance with data meeting the type certification basis of the airplane approved by a Boeing Company Designated Engineering Representative who has been authorized by the FAA to make such findings.

Conclusion

After careful review of the available data, including the comments noted above, the FAA has determined that air safety and the public interest require the adoption of the rule with the changes described previously. The FAA has determined that these changes will neither increase the economic burden on any operator nor increase the scope of the AD.

Cost Impact

There are approximately 190 airplanes of the affected design in the worldwide fleet. The FAA estimates that 95 airplanes of U.S. registry will be

affected by this AD, that it will take approximately 64 work hours per airplane to accomplish the required inspection, at an average labor rate of $60 per work hour. Based on these figures, the cost impact of the inspection required by this AD on U.S. operators is estimated to be $364,800, or $3,840 per airplane, per inspection cycle.

The cost impact figure discussed above is based on assumptions that no operator has yet accomplished any of the requirements of this AD action, and that no operator would accomplish those actions in the future if this AD were not adopted.

Should an operator elect to accomplish the optional terminating modification, it would take approximately 518 work hours per airplane to accomplish the modification, at an average labor rate of $60 per work hour. Required parts would cost approximately $17,000 per airplane. Based on these figures, the cost impact of the optional terminating modification is estimated to be $48,080 per airplane.

Regulatory Impact

The regulations adopted herein will not have substantial direct effects on the States, on the relationship between the national government and the States, or on the distribution of power and responsibilities among the various levels of government. Therefore, in accordance with Executive Order 12612, it is determined that this final rule does not have sufficient federalism implications to warrant the preparation of a Federalism Assessment.

For the reasons discussed above, I certify that this action (1) is not a ''significant regulatory action'' under Executive Order 12866; (2) is not a ''significant rule'' under DOT Regulatory Policies and Procedures (44 FR 11034, February 26, 1979); and (3) will not have a significant economic impact, positive or negative, on a substantial number of small entities under the criteria of the Regulatory Flexibility Act. A final evaluation has been prepared for this action and it is contained in the Rules Docket. A copy of it may be obtained from the Rules Docket at the location provided under the caption **ADDRESSES**.

List of Subjects in 14 CFR Part 39

Air transportation, Aircraft, Aviation safety, Incorporation by reference, Safety.

Adoption of the Amendment

Accordingly, pursuant to the authority delegated to me by the Administrator, the Federal Aviation Administration amends part 39 of the Federal Aviation Regulations (14 CFR part 39) as follows:

PART 39—AIRWORTHINESS DIRECTIVES

1. The authority citation for part 39 continues to read as follows:

Authority: 49 U.S.C. 106(g), 40113, 44701.

§ 39.13 [Amended]

2. Section 39.13 is amended by adding the following new airworthiness directive:

99–10–09 Boeing: Amendment 39–11162. Docket 97–NM–100–AD.

Applicability: Model 747–100, 747–200, and 747–SP series airplanes and military type E–4B airplanes; as listed in Boeing Service Bulletin 747–57A2303, Revision 1, dated September 25, 1997; certificated in any category.

Note 1: This AD applies to each airplane identified in the preceding applicability provision, regardless of whether it has been modified, altered, or repaired in the area subject to the requirements of this AD. For airplanes that have been modified, altered, or repaired so that the performance of the requirements of this AD is affected, the owner/operator must request approval for an alternative method of compliance in accordance with paragraph (d) of this AD. The request should include an assessment of the effect of the modification, alteration, or repair on the unsafe condition addressed by this AD; and, if the unsafe condition has not been eliminated, the request should include specific proposed actions to address it.

Compliance: Required as indicated, unless accomplished previously.

Note 2: Inspections and modifications accomplished prior to the effective date of this AD in accordance with Boeing Alert Service Bulletin 747–57A2303, dated December 19, 1996, are considered acceptable for compliance with the applicable action specified in this amendment.

To detect and correct fatigue cracking of the wing front spar web, which could result in a fuel leak, and consequent increased risk of a fire, accomplish the following:

Initial and Repetitive Inspections

(a) Perform an ultrasonic inspection to detect cracking of the wing front spar web at the fastener rows behind and between the upper link fittings for the number 2 and 3 engine struts, in accordance with the Accomplishment Instructions of Boeing Service Bulletin 747–57A2303, Revision 1, dated September 25, 1997, at the time specified in paragraph (a)(1) or (a)(2) of this AD, as applicable.

(1) For airplanes identified as Group 1, 2, 3, or 5 in the alert service bulletin: Inspect prior to the accumulation of 12,500 total flight cycles, or within 15 months after the effective date of this AD, whichever occurs later. Repeat the inspection thereafter at intervals not to exceed 2,200 flight cycles.

(2) For airplanes identified as Group 4, 6, 7, 8, 9, or 10 in the alert service bulletin: Inspect prior to the accumulation of 18,000 total flight cycles, or within 15 months after the effective date of this AD, whichever occurs later. Repeat the inspection thereafter at intervals not to exceed 3,000 flight cycles.

Corrective Actions

(b) If any crack is found during any inspection required by paragraph (a) of this AD, prior to further flight, accomplish either paragraph (b)(1) or (b)(2) of this AD.

(1) Accomplish the terminating action in accordance with the Accomplishment Instructions of Boeing Service Bulletin 747–57A2303, Revision 1, dated September 25, 1997. Accomplishment of this action constitutes terminating action for the repetitive inspection requirements of this AD; or

(2) Repair in accordance with a method approved by the Manager, Seattle Aircraft Certification Office (ACO), FAA, Transport Airplane Directorate; or in accordance with data meeting the type certification basis of the airplane approved by a Boeing Company Designated Engineering Representative who has been authorized by the Manager, Seattle ACO, to make such findings. For a repair method to be approved by the Manager, Seattle, ACO, as required by this paragraph, the Manager's approval letter must specifically reference this AD.

Optional Terminating Action

(c) Replacement of the affected wing front spar web with a new shot-peened wing front spar web in accordance with the Accomplishment Instructions of Boeing Service Bulletin 747–57A2303, Revision 1, dated September 25, 1997, constitutes terminating action for the repetitive inspection requirements of this AD, and, for the modified area only, for the repetitive inspection requirements of AD 98–15–21, amendment 39–10672.

Note 3: The area subject to the optional terminating action specified in paragraph (c) of this AD overlaps with part of the wing front spar that is the subject of AD 98–15–21.

Alternative Method of Compliance

(d) An alternative method of compliance or adjustment of the compliance time that provides an acceptable level of safety may be used if approved by the Manager, Seattle ACO. Operators shall submit their requests through an appropriate FAA Principal Maintenance Inspector, who may add comments and then send it to the Manager, Seattle ACO.

Note 4: Information concerning the existence of approved alternative methods of compliance with this AD, if any, may be obtained from the Seattle ACO.

Special Flight Permits

(e) Special flight permits may be issued in accordance with sections 21.197 and 21.199 of the Federal Aviation Regulations (14 CFR 21.197 and 21.199) to operate the airplane to a location where the requirements of this AD can be accomplished.

Incorporation by Reference

(f) The inspections and replacement shall be done in accordance with Boeing Service Bulletin 747–57A2303, Revision 1, dated

September 25, 1997. This incorporation by reference was approved by the Director of the Federal Register in accordance with 5 U.S.C. 552(a) and 1 CFR part 51. Copies may be obtained from Boeing Commercial Airplane Group, P.O. Box 3707, Seattle, Washington 98124–2207. Copies may be inspected at the FAA, Transport Airplane Directorate, 1601 Lind Avenue, SW., Renton, Washington; or at the Office of the Federal Register, 800 North Capitol Street, NW., suite 700, Washington, DC.

Effective Date

(g) This amendment becomes effective on June 15, 1999.

Issued in Renton, Washington, on May 3, 1999.

Darrell M. Pederson,

Acting Manager, Transport Airplane Directorate, Aircraft Certification Service.

[FR Doc. 99–11618 Filed 5–10–99; 8:45 am]

BILLING CODE 4910–13–P

DEPARTMENT OF TRANSPORTATION

Federal Aviation Administration

14 CFR Part 39

[Docket No. 98–NM–286–AD; Amendment 39–11163; AD 99–10–10]

RIN 2120–AA64

Airworthiness Directives; Boeing Model 747–200, –300, and –400 Series Airplanes

AGENCY: Federal Aviation Administration, DOT.

ACTION: Final rule.

SUMMARY: This amendment adopts a new airworthiness directive (AD), applicable to certain Boeing Model 747–200, –300, and –400 series airplanes, that requires replacement of fuse pins in the upper link, midspar fittings, and diagonal brace of the nacelle strut with new corrosion-resistant pins. This amendment is prompted by reports of cracked fuse pins in the upper link, midspar fittings, and diagonal brace of the nacelle strut due to fatigue and corrosion. The actions specified by this AD are intended to prevent cracking or corrosion of the fuse pins of the nacelle strut, which could result in failure of the fuse pin and strut-to-wing attachment, and consequent loss of the strut and separation of the engine from the airplane.

DATES: Effective June 15, 1999.

The incorporation by reference of certain publications listed in the regulations is approved by the Director of the Federal Register as of June 15, 1999.

ADDRESSES: The service information referenced in this AD may be obtained from Boeing Commercial Airplane Group, P.O. Box 3707, Seattle, Washington 98124–2207. This information may be examined at the Federal Aviation Administration (FAA), Transport Airplane Directorate, Rules Docket, 1601 Lind Avenue, SW., Renton, Washington; or at the Office of the Federal Register, 800 North Capitol Street, NW., suite 700, Washington, DC.

FOR FURTHER INFORMATION CONTACT: Tamara L. Anderson, Aerospace Engineer, Airframe Branch, ANM–120S, FAA, Transport Airplane Directorate, Seattle Aircraft Certification Office, 1601 Lind Avenue, SW., Renton, Washington 98055–4056; telephone (425) 227–2771; fax (425) 227–1181.

SUPPLEMENTARY INFORMATION: A proposal to amend part 39 of the Federal Aviation Regulations (14 CFR part 39) to include an airworthiness directive (AD) that is applicable to certain Boeing Model 747–200, –300, and –400 series airplanes was published in the **Federal Register** on February 18, 1999 (64 FR 8024). That action proposed to require replacement of fuse pins in the upper link, midspar fittings, and diagonal brace of the nacelle strut with new corrosion-resistant pins.

Comments

Interested persons have been afforded an opportunity to participate in the making of this amendment. Due consideration has been given to the two comments received.

One commenter supports the proposed rule. The second commenter states that the proposed rule will have no impact on it; therefore, the commenter supports the proposed rule.

Conclusion

After careful review of the available data, including the comments noted above, the FAA has determined that air safety and the public interest require the adoption of the rule as proposed.

Cost Impact

There are approximately 282 airplanes of the affected design in the worldwide fleet. The FAA estimates that 43 airplanes of U.S. registry will be affected by this AD, that it will take approximately 105 work hours per airplane to accomplish the required replacement, and that the average labor rate is $60 per work hour. Required parts will be provided by the manufacturer at no cost to the operators. Based on these figures, the cost impact of the AD on U.S. operators is estimated to be $270,900, or $6,300 per airplane.

The cost impact figure discussed above is based on assumptions that no operator has yet accomplished any of the requirements of this AD action, and that no operator would accomplish those actions in the future if this AD were not adopted.

Regulatory Impact

The regulations adopted herein will not have substantial direct effects on the States, on the relationship between the national government and the States, or on the distribution of power and responsibilities among the various levels of government. Therefore, in accordance with Executive Order 12612, it is determined that this final rule does not have sufficient federalism implications to warrant the preparation of a Federalism Assessment.

For the reasons discussed above, I certify that this action (1) is not a ''significant regulatory action'' under Executive Order 12866; (2) is not a ''significant rule'' under DOT Regulatory Policies and Procedures (44 FR 11034, February 26, 1979); and (3) will not have a significant economic impact, positive or negative, on a substantial number of small entities under the criteria of the Regulatory Flexibility Act. A final evaluation has been prepared for this action and it is contained in the Rules Docket. A copy of it may be obtained from the Rules Docket at the location provided under the caption **ADDRESSES.**

List of Subjects in 14 CFR Part 39

Air transportation, Aircraft, Aviation safety, Incorporation by reference, Safety.

Adoption of the Amendment

Accordingly, pursuant to the authority delegated to me by the Administrator, the Federal Aviation Administration amends part 39 of the Federal Aviation Regulations (14 CFR part 39) as follows:

PART 39—AIRWORTHINESS DIRECTIVES

1. The authority citation for part 39 continues to read as follows:

Authority: 49 U.S.C. 106(g), 40113, 44701.

§ 39.13 [Amended]

2. Section 39.13 is amended by adding the following new airworthiness directive:

99–10–10 Boeing: Amendment 39–11163. Docket 98–NM–286–AD.

Applicability: Model 747–200 and –300 series airplanes equipped with General Electric Model CF6–80C2 series engines, and Model 747–400 series airplanes; as listed in Boeing Service Bulletin 747–54–2155, Revision 2, dated June 6, 1996, certificated in any category; except those airplanes on which modifications of the strut/wing

structure have been accomplished in accordance either of the following AD's:

- AD 95–13–05, amendment 39–9285 (60 FR 33333, June 28, 1995), or
- AD 95–13–06, amendment 39–9286 (60 FR 33338, June 28, 1995).

Note 1: This AD applies to each airplane identified in the preceding applicability provision, regardless of whether it has been otherwise modified, altered, or repaired in the area subject to the requirements of this AD. For airplanes that have been modified, altered, or repaired so that the performance of the requirements of this AD is affected, the owner/operator must request approval for an alternative method of compliance in accordance with paragraph (c) of this AD. The request should include an assessment of the effect of the modification, alteration, or repair on the unsafe condition addressed by this AD; and, if the unsafe condition has not been eliminated, the request should include specific proposed actions to address it.

Compliance: Required as indicated, unless accomplished previously.

To prevent cracking or corrosion of the fuse pins of the nacelle strut, which could result in failure of the fuse pin and strut-to-wing attachment, and consequent loss of the strut and separation of the engine from the airplane, accomplish the following:

(a) Within 10 months after the effective date of this AD, replace the fuse pins in the upper link, midspar fittings, and diagonal brace of the nacelle strut with new corrosion-resistant pins, in accordance with the Accomplishment Instructions of Boeing Service Bulletin 747–54–2155, Revision 2, dated June 6, 1996.

Note 2: Replacement of the fuse pins accomplished prior to the effective date of this AD in accordance with the Accomplishment Instructions of Boeing Service Bulletin 747–54–2155, dated September 23, 1993, or Revision 1, dated December 8, 1994, is considered acceptable for compliance with the applicable action specified in this amendment.

Note 3: All fuse pins in the strut do not have to be replaced at the same time; however, the fuse pins do have to be replaced in sets, as specified in Boeing Service Bulletin 747–54–2155, Revision 2, dated June 6, 1996.

(b) Accomplishment of the replacement of the fuse pins specified in paragraph (a) of this AD constitutes terminating action for the repetitive inspections of the fuse pins of the upper link, required by AD 97–14–06, amendment 39–10064; of the fuse pins of the midspar fitting, required by AD 92–24–51, amendment 39–8439; and of the fuse pins of the diagonal brace, required by AD 93–03–14, amendment 39–8518.

Alternative Methods of Compliance

(c) An alternative method of compliance or adjustment of the compliance time that provides an acceptable level of safety may be used if approved by the Manager, Seattle Aircraft Certification Office (ACO), FAA, Transport Airplane Directorate. Operators shall submit their requests through an appropriate FAA Principal Maintenance Inspector, who may add comments and then send it to the Manager, Seattle ACO.

Note 4: Information concerning the existence of approved alternative methods of compliance with this AD, if any, may be obtained from the Seattle ACO.

Special Flight Permits

(d) Special flight permits may be issued in accordance with sections 21.197 and 21.199 of the Federal Aviation Regulations (14 CFR 21.197 and 21.199) to operate the airplane to a location where the requirements of this AD can be accomplished.

Incorporation by Reference

(e) The replacement shall be done in accordance with Boeing Service Bulletin 747–54–2155, Revision 2, dated June 6, 1996. This incorporation by reference was approved by the Director of the Federal Register in accordance with 5 U.S.C. 552(a) and 1 CFR part 51. Copies may be obtained from Boeing Commercial Airplane Group, P.O. Box 3707, Seattle, Washington 98124–2207. Copies may be inspected at the FAA, Transport Airplane Directorate, 1601 Lind Avenue, SW., Renton, Washington; or at the Office of the Federal Register, 800 North Capitol Street, NW., suite 700, Washington, DC.

(f) This amendment becomes effective on June 15, 1999.

Issued in Renton, Washington, on May 3, 1999.

Darrell M. Pederson,

Acting Manager, Transport Airplane Directorate, Aircraft Certification Service.

[FR Doc. 99–11616 Filed 5–10–99; 8:45 am]

BILLING CODE 4910–13–P

DEPARTMENT OF TRANSPORTATION

Federal Aviation Administration

14 CFR Part 39

[Docket No. 99–SW–09–AD; Amendment 39–11168; AD 99–10–15]

RIN 2120–AA64

Airworthiness Directives; Eurocopter France Model AS332L2

AGENCY: Federal Aviation Administration, DOT.

ACTION: Final rule; request for comments.

SUMMARY: This amendment adopts a new airworthiness directive (AD) that is applicable to AS332L2 helicopters. This action requires inspecting each main rotor head drag damper (damper) for a tear, crack, or bonding separation in the elastomer and, if necessary, replacing the damper with an airworthy damper. This amendment is prompted by a report of increased helicopter vibration in flight that was traced to the delamination of the elastomer on a damper. This condition, if not corrected, could result in failure of a damper and subsequent loss of control of the helicopter.

DATES: Effective May 26, 1999.

Comments for inclusion in the Rules Docket must be received on or before July 12, 1999.

ADDRESSES: Submit comments in triplicate to the Federal Aviation Administration (FAA), Office of the Regional Counsel, Southwest Region, Attention: Rules Docket No. 99-SW–09-AD, 2601 Meacham Blvd, Room 663, Fort Worth, Texas. Comments may be inspected at this location between 9 a.m. and 3 p.m., Monday through Friday, except Federal holidays.

FOR FURTHER INFORMATION CONTACT: Mike Mathias, Aerospace Engineer, FAA, Rotorcraft Directorate, Rotorcraft Standards Staff, Fort Worth, Texas 76193–0111, telephone (817) 222–5123, fax (817) 222–5961.

SUPPLEMENTARY INFORMATION: The Direction Generale De L'Aviation Civile (DGAC), the airworthiness authority for France, has notified the FAA that an unsafe condition may exist on Eurocopter France Model AS332L2 helicopters. The DGAC advises that it has received a report of damper elastomer impending separation on this model helicopter.

This helicopter model is manufactured in France and is type certificated for operation in the United States under the provisions of § 21.29 of the Federal Aviation Regulations (14 CFR 21.29) and the applicable bilateral airworthiness agreement. Pursuant to this bilateral airworthiness agreement, the DGAC has kept the FAA informed of the situation described above. The FAA has examined the findings of the DGAC, reviewed all available information, and determined that AD action is necessary for products of this type design that are certificated for operation in the United States.

Since an unsafe condition has been identified that is likely to exist or develop on other Eurocopter France Model AS332L2 helicopters of the same type design registered in the United States, this AD is being issued to prevent failure of a damper. This AD requires inspecting each damper for a tear, crack, or bonding separation in the elastomer and, if necessary, replacing the damper with an airworthy damper.

None of the Model AS332L2 helicopters affected by this action are on the U.S. Register. All helicopters included in the applicability of this rule are operated by non-U.S. operators under foreign registry; therefore, they are not directly affected by this AD action. However, the FAA considers that this rule is necessary to ensure that the

unsafe condition is addressed in the event that any of these subject helicopters are imported and placed on the U.S. Register in the future.

Should an affected helicopter be imported and placed on the U.S. Register in the future, it would require approximately ⅔ of a work hour to accomplish each of the inspections initially and to replace unairworthy parts at an average labor rate of $60 per work hour. Required parts would be approximately $4,000 per helicopter. Based on these figures, the total cost impact of the AD is estimated to be $4,040 per helicopter.

Since this AD action does not affect any helicopter that is currently on the U.S. Register, it has no adverse economic impact and imposes no additional burden on any person. Therefore, notice and public procedures hereon are unnecessary and the amendment may be made effective in less than 30 days after publication in the **Federal Register**.

Comments Invited

Although this action is in the form of a final rule that involves requirements affecting flight safety and, thus, was not preceded by notice and an opportunity for public comment, comments are invited on this rule. Interested persons are invited to comment on this rule by submitting such written data, views, or arguments as they may desire. Communications should identify the Rules Docket number and be submitted in triplicate to the address specified under the caption ''**ADDRESSES.**'' All communications received on or before the closing date for comments will be considered, and this rule may be amended in light of the comments received. Factual information that supports the commenter's ideas and suggestions is extremely helpful in evaluating the effectiveness of the AD action and determining whether additional rulemaking action would be needed.

Comments are specifically invited on the overall regulatory, economic, environmental, and energy aspects of the rule that might suggest a need to modify the rule. All comments submitted will be available, both before and after the closing date for comments, in the Rules Docket for examination by interested persons. A report that summarizes each FAA-public contact concerned with the substance of this AD will be filed in the Rules Docket.

Commenters wishing the FAA to acknowledge receipt of their comments submitted in response to this rule must submit a self-addressed, stamped postcard on which the following statement is made: ''Comments to Docket No. 99–SW–09–AD.'' The postcard will be date stamped and returned to the commenter.

The regulations adopted herein will not have substantial direct effects on the States, on the relationship between the national government and the States, or on the distribution of power and responsibilities among the various levels of government. Therefore, in accordance with Executive Order 12612, it is determined that this final rule does not have sufficient federalism implications to warrant the preparation of a Federalism Assessment.

The FAA has determined that notice and prior public comment are unnecessary in promulgating this regulation; and, therefore, it can be issued immediately to correct an unsafe condition in aircraft since none of these model helicopters are registered in the United States. It is not a ''significant regulatory action'' under Executive Order 12866. It has been determined further that this action involves an emergency regulation under DOT Regulatory Policies and Procedures (44 FR 11034, February 26, 1979). If it is determined that this emergency regulation otherwise would be significant under DOT Regulatory Policies and Procedures, a final regulatory evaluation will be prepared and placed in the Rules Docket. A copy of it, if filed, may be obtained from the Rules Docket at the location provided under the caption **ADDRESSES.**

List of Subjects in 14 CFR Part 39

Air transportation, Aircraft, Aviation safety, Safety.

Adoption of the Amendment

Accordingly, pursuant to the authority delegated to me by the Administrator, the Federal Aviation Administration amends part 39 of the Federal Aviation Regulations (14 CFR part 39) as follows:

PART 39—AIRWORTHINESS DIRECTIVES

1. The authority citation for part 39 continues to read as follows:

Authority: 49 U.S.C. 106(g), 40113, 44701.

§ 39.13 [Amended]

2. Section 39.13 is amended by adding a new airworthiness directive (AD) to read as follows:

AD 99–10–15 **Eurocopter France:** Amendment 39–11168. Docket No. 99–SW–09–AD.

Applicability: AS332L2 helicopters, with main rotor head drag damper, part number (P/N) 332A311980–02, having elastomeric bearings P/N J19084–4, installed, certificated in any category.

Note 1: This AD applies to each helicopter identified in the preceding applicability provision, regardless of whether it has been otherwise modified, altered, or repaired in the area subject to the requirements of this AD. For helicopters that have been modified, altered, or repaired so that the performance of the requirements of this AD is affected, the owner/operator must request approval for an alternative method of compliance in accordance with paragraph (c) of this AD. The request should include an assessment of the effect of the modification, alteration, or repair on the unsafe condition addressed by this AD; and, if the unsafe condition has not been eliminated, the request should include specific proposed actions to address it.

Compliance: Required as indicated, unless accomplished previously.

To detect delamination of an elastomeric bearing that could result in failure of a main rotor head drag damper (damper) and subsequent loss of control of the helicopter, accomplish the following:

(a) Within 10 hours time-in-service (TIS), inspect each damper, P/N 332A311980–02, for a tear, crack, or bonding separation in the elastomer as follows: (See Figure 1.)

(1) Separate the elastomer in Area A (outside reinforcement) and in area B (inside reinforcement).

(2) If a tear, crack, or bonding separation is found, replace the damper with an airworthy damper.

Note 2: American Eurocopter Master Servicing Recommendation (PRE) 05.99.00, rush revision date-code 97–46, and the Aircraft Maintenance Manual Nos. 05.21.00.213 and 05.21.00.213.001 pertain to the subject of this AD.

(b) Thereafter, prior to the first flight of each day or at intervals not to exceed 20 hours TIS, whichever occurs first, perform the inspection in paragraph (a). If a tear, crack, or bonding separation is found in the elastomer, replace the damper with an airworthy damper.

BILLING CODE 4910–13–U

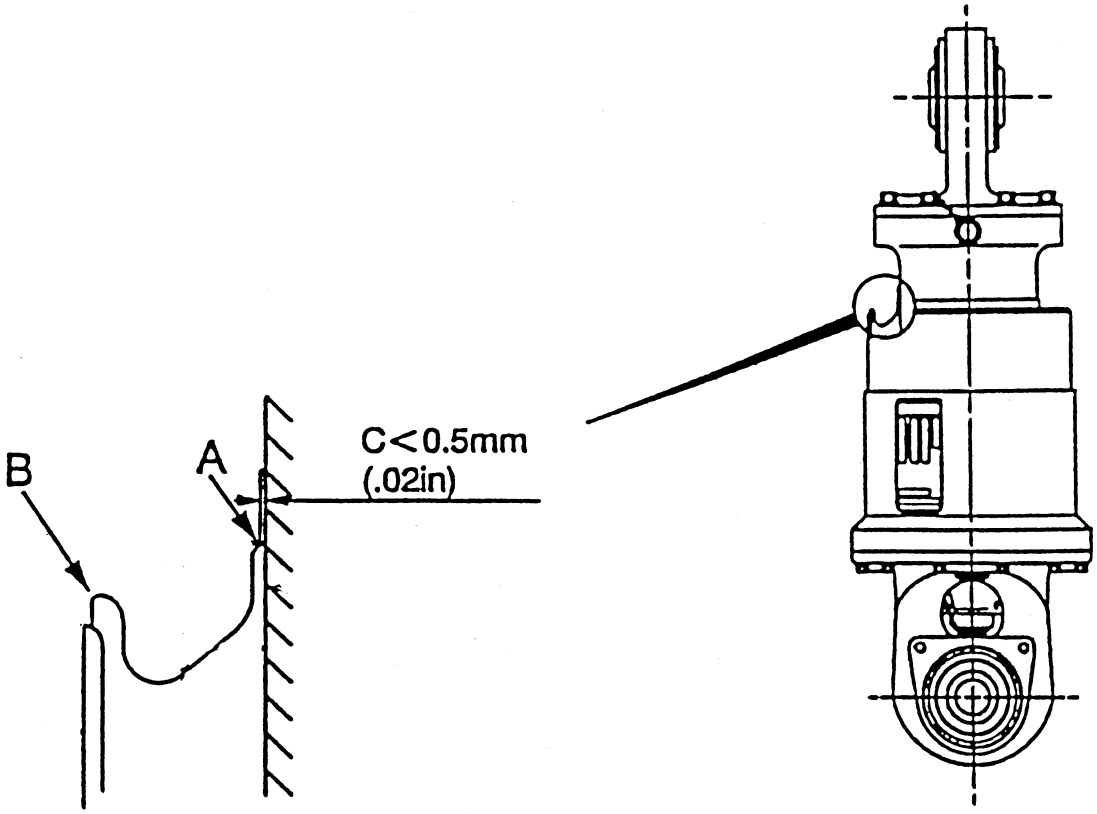

Figure 1

BILLING CODE 4910–13–C

(c) An alternative method of compliance or adjustment of the compliance time that provides an acceptable level of safety may be used if approved by the Manager, Rotorcraft Standards Staff. Operators shall submit their requests through an FAA Principal Maintenance Inspector who may concur or comment and then send it to the Manager, Rotorcraft Standards Staff.

Note 3: Information concerning the existence of approved alternative methods of compliance with this AD, if any, may be obtained from the Rotorcraft Standards Staff.

(d) Special flight permits may be issued in accordance with §§ 21.197 and 21.199 of the Federal Aviation Regulations (14 CFR 21.197 and 21.199) to operate the helicopter to a location where the requirements of this AD can be accomplished.

(e) This amendment becomes effective on May 26, 1999.

Note 4: The subject of this AD is addressed in Direction Generale De L'Aviation Civile (France) AD 97–378–009(AB), dated December 17, 1997.

Issued in Fort Worth, Texas, on May 4, 1999.

Henry A. Armstrong,

Manager, Rotorcraft Directorate, Aircraft Certification Service.

[FR Doc. 99–11781 Filed 5–10–99; 8:45 am]

BILLING CODE 4910–13–U

DEPARTMENT OF TRANSPORTATION

Federal Aviation Administration

14 CFR Part 39

[Docket No. 99–CE–03–AD; Amendment 39–11081; AD 99–06–17]

RIN 2120–AA64

Airworthiness Directives; Pilatus Aircraft Ltd. Models PC–12 and PC–12/45 Airplanes

AGENCY: Federal Aviation Administration, DOT.

ACTION: Direct final rule; confirmation of effective date.

SUMMARY: This action confirms the effective date of Airworthiness Directive (AD) 99–06–17, which applies to certain Pilatus Aircraft Ltd. (Pilatus) Models PC–12 and PC–12/45 airplanes. AD 99–06–17 requires installing a support bracket and a cut-out relay for the second generator control unit. AD 99–06–17 also requires making all the wiring additions and adjustments necessary for the above-referenced installations. This AD was the result of mandatory continuing airworthiness information (MCAI) issued by the airworthiness authority for Switzerland. The actions specified in this AD are intended to prevent damage to electrical components because incorrectly connected cables or broken or damaged wires cause excessive voltages to the second generator, which could result in loss of electrical power during any phase of flight.

EFFECTIVE DATE: June 16, 1999.

FOR FURTHER INFORMATION CONTACT: Mr. Roman T. Gabrys, Aerospace Engineer, FAA, Small Airplane Directorate, 1201 Walnut, suite 900, Kansas City, Missouri 64106; telephone: (816) 426–6932; facsimile: (816) 426–2169.

SUPPLEMENTARY INFORMATION: The FAA published this direct final rule with request for comments in the **Federal Register** on March 23, 1999 (64 FR 13882). The FAA uses the direct final rulemaking procedure for a non-controversial rule where the FAA anticipates that there will be no adverse public comment. This direct final rule advised the public that no adverse comments were anticipated, and that unless a written adverse comment, or a written notice of intent to submit such an adverse comment, was received within the comment period, the regulation would become effective on June 16, 1999. No adverse comments were received, and thus this notice confirms that this final rule will become effective on that date.

Issued in Kansas City, Missouri, on May 4, 1999.

Michael Gallagher,

Manager, Small Airplane Directorate, Aircraft Certification Service.

[FR Doc. 99–11780 Filed 5–10–99; 8:45 am]

BILLING CODE 4910–13–P

LIBRARY OF CONGRESS

Copyright Office

37 CFR Part 251

[Docket No. RM 99–1 CARP]

Payment of Arbitrators; Distribution Proceedings

AGENCY: Copyright Office, Library of Congress.

ACTION: Final regulations.

SUMMARY: The Copyright Office is announcing final regulations that prescribe how the arbitrators who serve on a copyright arbitration royalty panel shall be reimbursed for their services.

DATES: Effective June 10, 1999.

FOR FURTHER INFORMATION CONTACT: David O. Carson, General Counsel, or Tanya M. Sandros, Attorney Advisor, Copyright Arbitration Royalty Panel (''CARP''), P.O. Box 70977, Southwest Station, Washington, D.C. 20024. Telephone (202) 707–8380. Telefax: (202) 252–3423.

SUPPLEMENTARY INFORMATION: Copyright arbitration royalty panels (CARPs) are *ad hoc* panels administered by the Librarian of Congress and the Copyright Office. The CARPs adjust the rates and distribute the royalty fees collected under the various compulsory licenses and statutory obligations of the Copyright Act.

Three arbitrators serve on each panel. Upon the recommendation of the Register of Copyrights, the Librarian of Congress selects two of the arbitrators, who in turn choose a third person to serve as the chairperson. Prior to the passage in 1997 of the Technical Corrections to the Satellite Home Viewer Act of 1994, Public Law 105–80, 111 Stat. 1529, the Librarian of Congress had no express authority to pay the arbitrators for their services, even in those instances when the Library held the royalty fees that were the subject of a distribution proceeding. Consequently, the responsibility for paying the arbitrators fell to the parties participating in the proceeding.

This changed with the passage of the technical amendments act which, *inter alia,* revised section 801(d). Section 801(d) now reads, in relevant part, as follows:

> The Librarian of Congress, upon the recommendation of the Register of Copyrights, . . . shall reimburse the arbitrators presiding in distribution proceedings at such intervals and in such manner as the Librarian shall provide by regulation. . . . Payments to the arbitrators shall be considered reasonable costs incurred by the Library of Congress and the Copyright Office for purposes of section 802(h)(1).

17 U.S.C. 801(d). The change allows the Librarian of Congress to use the royalty fees that have been collected under title 17 to pay the arbitrators who determine the distribution of these same royalty fees. Payments to these arbitrators are identified as reasonable costs of the Library and shall be made in accordance with the regulations promulgated by the Librarian of Congress.

The final regulations announced herein amend 37 CFR 251.54 to specify how often and in what manner the arbitrators shall receive payment for their service on a CARP. In accordance with the administrative processes associated with making payments for services contracted for outside the Library of Congress, payment shall be made within 30 days of the receipt of a proper statement of cost. In the case of a distribution proceeding, each arbitrator shall receive payment directly from the Library of Congress. In the case of a rate adjustment proceeding, each arbitrator shall receive payment directly from the parties participating in the proceeding.

The provisions of the Administrative Procedure Act, 5 U.S.C. 553, requiring notice of proposed rulemaking, the opportunity for notice and comment, and a delay in the effective date, do not apply to the proposed amendments to § 251.54, of title 37 of the CFR, because the regulations pertain to agency management of a contractual obligation. No other law requires that a notice of proposed rulemaking and an opportunity for public comment be given for these amendments. Accordingly, the Copyright Office is adopting the amendments as final regulations upon publication in the **Federal Register**.

List of Subjects in 37 CFR Part 251

Administrative practice and procedure, Hearing and appeal procedures.

For the reasons set out in the preamble, chapter II of title 37 of the Code of Federal Regulations is to be amended as follows:

PART 251—COPYRIGHT ARBITRATION ROYALTY PANEL RULES OF PROCEDURE

1. The authority citation for part 251 continues to read as follows:

Authority: 17 U.S.C. 801–803.

2. Revise § 251.54 to read as follows:

§ 251.54 Assessment of costs of arbitration panels.

(a) The ordinary and necessary costs of an arbitrator shall be assessed, in accordance with § 251.38, as follows:

(1) In the case of a rate adjustment proceeding, the parties to the proceeding shall bear the entire cost thereof in such manner and proportion as the panel shall direct.

(2) In the case of a distribution proceeding, the parties to the proceeding shall bear the total cost of the proceeding in direct proportion to their share of the distribution. These costs shall be considered reasonable costs incurred by the Librarian of Congress and the Copyright Office. Such costs shall be deducted from the royalty fees which have been deposited and collected under title 17 of the United States Code and which are the subject of the distribution proceeding.

(b) Each arbitrator shall itemize his or her expenses on the statement of cost in a format approved by the General Counsel and shall specify the name and address to whom payment should be made. In the case of a rate adjustment proceeding, each statement of cost shall specify each party's share of the total cost and the amount owed by that party to each arbitrator, or alternatively, reflect the method of payment agreed upon by the parties and the arbitrators.

(c) The statements of cost shall be sent to the Library of Congress no more frequently than once a month.

(1) In the case of a distribution proceeding, the statements of cost shall be sent to the Accounting Operations Section, Financial Services Directorate, Library of Congress, 101 Independence

Avenue, SE, Washington, DC 20540–9112, and a copy of the statements of cost shall be submitted to the Copyright Office as directed in paragraph (c)(2) of this section.

(2) In the case of a rate adjustment proceeding, the statements of cost shall be sent to the CARP Specialist, P.O. Box 70977, Southwest Station, Washington, DC 20024, or hand delivered to the Office of the Copyright General Counsel, Room 403, James Madison Building, 101 Independence Avenue, SE, Washington, DC 20540.

(d) In the case of a rate adjustment proceeding, all parties to the proceeding shall have 30 days from receipt of a proper statement of cost in which to tender payment to the arbitrators, unless otherwise directed by the panel. Payment should be in the form of a money order, check, bank draft, or electronic fund transfer.

(e) In the case of a distribution proceeding, the Library of Congress shall reimburse the arbitrators directly from the royalty fees collected under title 17 of the United States Code which are the subject of the CARP proceeding. Payment of approved costs shall be made within 30 days of the receipt of a proper statement of cost in the form of an electronic fund transfer in accordance with the regulations of the Library of Congress.

Dated: April 28, 1999.

Marybeth Peters,

Register of Copyrights.

Approved by:

James H. Billington,

The Librarian of Congress.

[FR Doc. 99–11883 Filed 5–10–99; 8:45 am]

BILLING CODE 1410–33–P

DEPARTMENT OF VETERANS AFFAIRS

38 CFR Part 4

RIN 2900–AF22

Schedule for Rating Disabilities; Diseases of the Ear and Other Sense Organs

AGENCY: Department of Veterans Affairs.

ACTION: Final rule.

SUMMARY: This document amends that portion of the Department of Veterans Affairs (VA) Schedule for Rating Disabilities that addresses the ear and other sense organs. The intended effect of this action is to update this portion of the rating schedule to ensure that it uses current medical terminology and unambiguous criteria, and that it reflects medical advances that have occurred since the last review.

DATES: Effective Dates: This amendment is effective June 10, 1999.

FOR FURTHER INFORMATION CONTACT: Caroll McBrine, M.D., Consultant, Regulations Staff (211B), Compensation and Pension Service, Veterans Benefits Administration, Department of Veterans Affairs, 810 Vermont Ave., NW, Washington DC 20420, (202) 273–7230.

SUPPLEMENTARY INFORMATION: As part of its review of the Schedule for Rating Disabilities, VA published a proposal to amend that portion of the Schedule pertaining to the ear and other sense organs in the **Federal Register** of April 12, 1994 (59 FR 17295–17301). Interested persons were invited to submit written comments on or before June 13, 1994. We received comments from the Veterans of Foreign Wars, Disabled American Veterans, and three individuals.

The evaluation of hearing impairment in the previous rating schedule was based on two criteria: the results of a puretone audiometry test and the results of a controlled speech discrimination test. Based on the results of these tests, one of two tables was used to determine a Roman numeral designation for hearing impairment: Table VI, where the number is determined by combining the percent of speech discrimination with the average puretone decibel (dB) loss, and Table VIa, which is based solely on average puretone dB loss, and was used only if language difficulties or inconsistent speech audiometric scores made use of Table VI inappropriate. The Roman numeral designations determined for each ear using Table VI or VIa were then combined using Table VII, in order to determine the percentage evaluation for hearing impairment. We proposed no change in this method of evaluation and included information about it in § 4.85, ''Evaluation of hearing impairment'' and § 4.86, ''Auditory acuity, hearing aids, and evidence other than puretone audiometry and controlled speech.'' In response to several comments we received about the method of evaluation, and requesting more specific details, we have reorganized §§ 4.85 and 4.86 for the sake of clarity, as explained in detail below.

One commenter stated that nowhere is VA's authority to use the specific hearing tests it uses spelled out in the regulations. We agree that the tests required were not specified in the rating schedule and have therefore stated in § 4.85(a) that the Maryland CNC speech discrimination test and the puretone audiometry test are to be used for evaluating hearing impairment. The use of the Maryland CNC speech discrimination test and the puretone threshold average determined by an audiometry test was established by a regulation on the evaluation of hearing loss published in the **Federal Register** on November 18, 1987 (52 FR 44117). That regulation changed the method of evaluating hearing loss based on a VA study on hearing loss testing methods and assistive hearing devices that had been requested by Congress in 1984. The results of the study were published in a VA report titled ''Report on Hearing Loss Study'' that was issued on January 6, 1986. Although the regulation revised the rating schedule to incorporate rating tables based on the new method of evaluation, it did not add to the schedule specific details about the new testing methods.

One commenter stated that if only VA examinations or authorized audiological clinic examinations are to be used, this should be stated in the proposed regulation. Based on this comment, we have stated in § 4.85(a) that an examination for hearing impairment for VA purposes must be conducted by a state-licensed audiologist. This will help to assure that examinations of veterans will be accurate and consistent because state licensing agencies require that audiologists meet specific educational and training requirements and pass a national competency examination.

Two commenters noted that the meaning of average puretone decibel loss is not explained in the rating schedule. We agree that this information should be included in the rating schedule and have added an explanation in § 4.85(d). For VA purposes, the average puretone decibel loss means a four-frequency puretone threshold average obtained by adding the puretone thresholds at four specified frequencies'1000, 2000, 3000, and 4000 Hertz and dividing by four. This method and the reasons for its selection were explained in the 1987 regulation referred to above. Current terminology is ''puretone threshold average'' rather than ''average puretone decibel loss,'' and we have used this language in § 4.85 and have revised the labels in Tables VI and VIa. For clarity, we have also titled Table VIa, untitled in the proposed rule, ''Numeric Designation of Hearing Impairment Based Only on Puretone Threshold Average'' and retitled Table VI, titled ''Numeric Designation of Hearing Impairment'' in the proposed rule, ''Numeric Designation of Hearing Impairment Based on Puretone Threshold Average and Speech Discrimination.'' In the proposed rule we inadvertently placed

the numeric tables in § 4.86, we have moved them to § 4.85(h) as the more appropriate location. We removed the examples from § 4.85 because the directions for using the tables are clear enough without them.

We also proposed to add two new provisions for evaluating veterans with certain patterns of hearing impairment that cannot always be accurately assessed under § 4.85, because the speech discrimination test may not reflect the severity of communicative functioning these veterans experience. These veterans were identified in review studies carried out by the Veterans Health Administration's (VHA's) Audiology and Speech Pathology Service in 1991. One of the new provisions, proposed as § 4.85(d), stated that if puretone thresholds in any four of the five frequencies of 500, 1000, 2000, 3000, and 4000 Hertz are 55 dB's or more, an evaluation could be based either on Table VI or Table VIa, whichever results in a higher evaluation. (This provision has been redesignated § 4.86(a), as discussed below.)

One commenter, although offering no rationale for the comment, suggested that the level of hearing loss for this provision should be 50 dB instead of 55.

To conduct a speech discrimination test in someone with hearing impairment, the sounds must be amplified sufficiently for the individual to hear the words. The greater the dB threshold level, the higher the level of amplification that is needed. Up to a 50 dB threshold level, amplification sufficient to conduct a speech discrimination test is feasible. However, with a 55 dB threshold level—the level at which speech becomes essentially inaudible—the high level of amplification needed to attempt to conduct a speech discrimination test would be painful to most people, and speech discrimination tests may therefore not be possible or reliable. The new provision will allow evaluation of hearing impairment in such individuals on the basis of puretone threshold average only, if that results in a higher evaluation than one based on a combination of speech discrimination and puretone threshold average.

The same commenter suggested applying proposed § 4.85(d) if three of the five specified frequencies have a threshold of 55 dB or more because the frequencies of 2000 and above are the most important frequencies for speech discrimination, and precipitous hearing impairment in the high frequencies is extremely handicapping in the work environment.

The frequencies selected and the dB threshold were chosen because VHA, through their clinical studies, found that speech discrimination studies are quite variable in veterans with a 55 dB threshold in four or more frequencies and may not accurately reflect the true extent of disability. Also based on the results of their studies, they did not extend the recommendation for an alternative method of evaluation to those with that extent of hearing impairment at only three frequencies. In view of VHA's recommendations, based on tests conducted on 1565 individuals, we make no change based on this comment.

The second provision we proposed to add (as § 4.85(e)) was to direct the rating agency to choose the Roman numeral designation derived from either table VI or VIa, whichever is higher, when puretone thresholds are 30 dB or less at frequencies of 1000 Hertz and below, and are 70 dB or more at 2000 Hertz. It also directed the rating agency to elevate that Roman numeral designation one level. This provision was meant to compensate for a pattern of hearing impairment that is an extreme handicap in the presence of any environmental noise. VHA found that when this pattern of impairment is present, a speech discrimination test conducted in a quiet room with amplification of the sounds does not always reflect the extent of impairment experienced in the ordinary environment. This provision allows evaluation of hearing impairment in these individuals on puretone average only, if that results in a higher evaluation. (This provision has been redesignated § 4.86(b), as discussed below.)

One commenter said it appears in proposed § 4.85(d) and (e) that 500 Hertz is one of the frequencies to be used in the puretone average, although when § 4.85 was revised in 1987, the supplementary information stated that puretone frequencies at 1000, 2000, 3000, and 4000 Hertz were to be used to determine the puretone threshold average. The commenter also said that the use of four frequencies in some circumstances and of five or more in others requires an explanation of why such a methodology does not give rise to disparate treatment.

In the proposed rule, the four frequency puretone threshold average was the basis of the evaluation for hearing impairment in all cases, and the 500 Hertz frequency was to be used only to help select the veterans to whom the special provisions would be applied. However, in order to remove any suggestion of disparate treatment, and after consultation with VHA, we removed the 500 Hertz stipulations from the two proposed special provisions. VHA assured us that this change would not affect the need for the special provisions and would not affect the disability ratings of any group of veterans.

One commenter suggested that the language for evaluation parallel the language of 38 CFR 3.385.

The purpose of § 3.385, ''Disability due to impaired hearing,'' is to explain the basis for determining whether impaired hearing is a disability, which is different from the purpose of § 4.85, which is to explain how to evaluate hearing impairment, once it has been determined to be a disability, for purposes of disability compensation. Since these regulations serve different purposes, and different frequencies are involved, the use of parallel language is neither necessary nor feasible.

When the puretone threshold average is 105 dB or more, tables VI and VIa require a numeric designation of XI, the highest level of evaluation. This is unchanged from the previous schedule. One commenter stated that a loss of greater than 92 dB, rather than 105 dB, would result in total impairment in everyone, according to the *American Academy of Otolaryngology and Otolaryngology Guide for the Evaluation of Hearing Impairment.*

Methods of measuring hearing impairment and assessing disability based on the results vary from one organization to another, making direct comparisons infeasible. Not all organizations use the same range of frequencies, for example, to determine a puretone threshold average. While VA uses 1000, 2000, 3000, and 4000 Hertz for evaluation, based on the results of the VA study referred to above, the American Medical Association (AMA), in its ''Guides to the Evaluation of Permanent Impairment'' 4th ed., 1993, uses 500, 1000, 2000, and 3000 Hertz. The National Institute for Occupational Safety and Health proposed using puretone thresholds at 1000, 2000, 3000, and 4000 Hertz, as has the American Speech and Hearing Association Task Force, and their rationale is that these frequencies are most sensitive to discrimination ability in quiet and in noise. Not all organizations use a speech discrimination test in evaluating hearing impairment; the AMA, for example, does not. The guide referred to by the commenter is no longer in existence, but the AMA Guides states that the criteria it uses are adapted from the 1979 Academy of Otolaryngology-Head and Neck Surgery Guide. The AMA Guides considers impairment of hearing to be total if the average of the four puretone

frequencies they use is over 91.7 dB. However, total impairment of hearing under their system does not mean that a 100-percent disability evaluation is assigned. Under the AMA disability evaluation system, each disability is considered in terms of its effect on the whole person. The evaluation they would assign for a bilateral puretone threshold of 91.7 dB (in workers' compensation claims, for example) is 35 percent, not 100 percent. With a unilateral puretone threshold of 91.7 dB (with the other ear normal), the AMA system would evaluate monaural hearing impairment at 100 percent, and binaural hearing impairment at approximately 17 percent, but the actual evaluation they would assign is six percent. Thus, direct comparisons of different systems of evaluating disability due to hearing loss are not possible, and we make no change based on this comment.

One commenter pointed out that § 4.86 in the previous schedule stated that evaluations are intended to make proper allowance for improvement by hearing aids and that examination to determine the improvement is not necessary. The commenter further stated that because Table VI appears to be unchanged in the proposed regulations, it would appear that Table VI continues to be built on the assumption of improvement with hearing aids and that performing audiology tests with hearing aids or adjusting the rating values based on an assumption of improvement with hearing aids violates the policy of determining impairment of body function without the use of any prosthetic device.

We are unaware of any general policy which prohibits consideration of the effect of a prosthetic device in determining the degree of impairment. In fact, there is a standard method for measuring best corrected vision, and the rating schedule requires that examinations for visual impairment include corrected, as well as uncorrected, visual acuity. However, there is no standard procedure for measuring best corrected hearing, and the amended instruction (§ 4.85(a)) states that examinations for hearing impairment will be conducted without the use of hearing aids. Section 4.85(a) is clear enough that, in order to avoid confusion, we have removed the language in proposed § 4.86(b) stating that the evaluations are designed to measure the best residual uncorrected hearing and that examinations comparing hearing with and without hearing aids are unnecessary. VHA consultants indicated that it is well accepted in the audiological literature that the better the speech discrimination score, the better the overall result with hearing aids, but they also stated that the language in the former rating schedule about anticipated improvement by a hearing aid did not in any way affect the method of evaluation or disability ratings themselves, and that removal of that language would also have no effect on the method of evaluation or on disability ratings.

The previous § 4.87 and proposed § 4.86(a) defined ''impairment of auditory acuity,'' for VA purposes. However, that term is not used elsewhere in the rating schedule, although the terms ''hearing impairment,'' ''hearing loss,'' and ''deafness'' are used. We have therefore removed § 4.86(a) as unnecessary and have, for the sake of clarity, used ''hearing impairment'' in all other parts of the rating schedule to designate a loss of hearing except where the statutory terms ''deafness'' or ''hearing loss'' are required (by 38 U.S.C. 1114(k)).

Former section 4.86a, ''Evidence other than puretone audiometry and controlled speech,'' explained that where claims contain evidence which predates the use of puretone audiometry and controlled speech, determination of service connection will be evaluated under the regulations in effect on December 17, 1987. We proposed to retain this instruction in § 4.86(c). One commenter suggested that this is not a rating regulation and that it properly belongs in Part 3 of 38 CFR.

We agree that regulations regarding service connection are not appropriate in the rating schedule, which is used for the evaluation of disabilities, and we have removed § 4.86(c). This completes the removal of the contents of proposed § 4.86. We have, however, retained § 4.86, retitled it ''Exceptional patterns of hearing impairment,'' and added paragraphs (a) and (b) for the two provisions that were proposed as § 4.85(d) and (e). This change better highlights the unusual aspects of evaluating these uncommon patterns of hearing impairment.

The previous schedule did not provide specific instructions on evaluating bilateral hearing impairment when hearing impairment is service-connected in only one ear. One commenter suggested that we add a note indicating that a non-service-connected ear is to be treated as having normal hearing.

We concur and have added § 4.85(f) to specify that a non-service-connected ear will be assigned a Roman numeral designation of I, subject to the provisions of § 3.383, ''Special consideration for paired organs and extremities.'' This is consistent with the manner in which we evaluate other paired organs, where only one of the pair is service-connected (38 CFR 4.73 (muscle injuries) and 38 CFR 4.124a (diseases of the cranial and peripheral nerves)).

One commenter stated that the regulation should include a specific effective date and should state whether the regulatory change constitutes a liberalizing law or issue.

The effective date of the regulation will be 30 days after publication of this final rule in the **Federal Register**. The revisions of the sections addressing ear and other sense organs are part of the overall revision of the rating schedule based on medical advances, etc., rather than representing liberalizing interpretations of regulations. We have explained above the reasons for the provisions of § 4.86. The preamble erred in discussing these provisions as liberalizations. Rather, they are an attempt to assure more equitable evaluations in a small number of veterans with unusual patterns of hearing impairment.

Special monthly compensation (SMC) is a benefit authorized by 38 U.S.C. 1114 that is payable in addition to the compensation payable for specific disabilities, or combinations of disabilities, based upon the extent of impairment under the Schedule for Rating Disabilities. We proposed removing the footnote regarding SMC in Table VII in favor of a single note at the end of § 4.85 directing the rating agency to refer to § 3.350 (''Special monthly compensation ratings'') to determine whether a claimant is entitled to SMC. One commenter suggested that we retain this footnote.

In response to the comment, and for the sake of consistency with references to SMC that we have made in other revised sections of the rating schedule, we have added this information as § 4.85(g) and also restored a footnote to Table VII, Percentage Evaluations for Hearing Impairment, indicating that the rating agency is to review for entitlement to special monthly compensation under § 3.350. (We proposed to put the information now in § 4.85(g) in a footnote following § 4.86, but moved it to § 4.85 instead to remove ambiguity about whether it referred only to the provisions of § 4.86 or to all hearing evaluations.) A single footnote to Table VII is adequate because we have deleted all but one diagnostic code (DC), 6100, for hearing impairment, since it is unnecessary for any practical purpose to have multiple diagnostic codes to indicate various evaluation

levels of the same disability. SMC may be warranted not only when hearing impairment is evaluated at 100 percent, but also for various levels of deafness (or hearing impairment) when they occur in combination with blindness, and the single footnote will assure that SMC is always considered when there is hearing impairment. We believe that the combination of the footnote and § 4.85(g) is the most effective method for ensuring complete review for special monthly compensation.

38 U.S.C. 1114(k) authorizes payment of SMC if there is absence of air and bone conduction in both ears. The implementing regulation, 38 CFR 3.350(a)(5), states that deafness of both ears, having absence of air and bone conduction, will be held to exist when bilateral hearing loss is equal to or greater than the minimum bilateral hearing loss required for a maximum rating (100 percent) under the schedule. One commenter suggested that we add a footnote to the 80- and 90-percent levels indicating entitlement to special monthly compensation, because these evaluations constitute deafness, for all practical purposes.

We do not concur. Complete loss of air and bone conduction would result in no response on audiometry, even at 105 dB, according to VHA consultants, and would therefore warrant a 100-percent evaluation. If there is a response on audiometry, which would necessarily be the case to establish an 80- or 90-percent evaluation for hearing impairment, there is not complete absence of air and bone conduction, and the hearing impairment in those cases would not meet the requirements of 38 U.S.C. 1114(k). Such a footnote would therefore be contrary to statutory requirements.

The previous schedule listed mastoiditis under its own diagnostic code (6206), with evaluation based on suppuration and impairment of hearing. We proposed to combine it with suppurative otitis media under DC 6200. The previous schedule provided neither diagnostic code nor evaluation criteria for cholesteatoma; raters have generally evaluated it analogous to otitis media. We also proposed to include cholesteatoma under DC 6200, because the three conditions are closely related, and their manifestations may be essentially the same. One commenter suggested that we assign separate diagnostic codes for cholesteatoma and mastoiditis because the proposed rule is ambiguous as to whether one of these conditions must accompany otitis media to assign a 10-percent evaluation and because mastoiditis and cholesteatoma can exist without forming pus (suppuration).

Chronic otitis media, mastoiditis, and cholesteatoma may exist with or without suppuration. However, two or more of these conditions, all of which are interrelated, commonly coexist, and their manifestations may be very similar. For example, chronic mastoiditis may develop simultaneously with otitis media or may occur as a later complication. Therefore, a single diagnostic code and set of evaluation criteria for all three conditions is appropriate, and we have revised the title of DC 6200 to clarify that it can apply to any of these conditions. We have also added aural polyps to the criteria for a 10-percent evaluation because they are a possible consequence of chronic otitis media. We have also expanded the note directing that hearing impairment be evaluated separately to include a list of other possible complications—labyrinthitis, tinnitus, facial nerve paralysis, and bone loss of skull—that would also warrant separate evaluations. These criteria better encompass the usual range of impairments that may develop in this group of conditions. Placing these related conditions under a single diagnostic code will help assure that the same impairment is not evaluated twice when more than one of these conditions is present in an individual.

The previous schedule addressed otitis interna under DC 6203 and evaluated it based on the extent of hearing loss. We proposed to eliminate this diagnostic code because otitis interna is an archaic name for a general ear infection condition which is more accurately classified as a peripheral vestibular disorder, DC 6204. One commenter suggested that we provide instructions under peripheral vestibular disorders explaining how to evaluate otitis interna. We do not concur. Otitis interna is an obsolete term, and conditions which it formerly encompassed are best evaluated under the criteria for peripheral vestibular disorders.

The previous rating schedule provided three evaluation levels for Meniere's syndrome, DC 6205, based on the severity and frequency of attacks. Among other things, we proposed to provide objective measures for the frequency of the attacks. One commenter stated that the prodromal signs, the duration of the episode, and the recovery period for an attack may last as long as ten days, and therefore suggested that the frequency of attacks proposed for the 100-percent evaluation (more than once weekly) and 60-percent evaluation (once a week or less) was too stringent. The commenter also said that ''attacks occurring once a week or less'' should be better defined.

Attacks of vertigo in Meniere's syndrome appear suddenly and last from a few to 24 hours (*Boies Fundamentals of Otolaryngology, Sixth Edition,* W.B. Saunders Company, 1989, p.139, and *The Merck Manual of Diagnosis and Therapy,* Merck Research Laboratories, 1992, p. 2336). Since the attacks of vertigo (often accompanied by nausea, vomiting, hearing impairment, and tinnitus) generally subside within 24 hours, requiring attacks more than once weekly for a 100-percent level, and one to four times a month for a 60-percent level, are reasonable requirements, in our judgment, that are equivalent to, but more objective than, the requirements of ''frequent and typical,'' and ''less frequent'' in the previous schedule. In response to the comment, however, we better defined the criteria by changing the requirements for a 60-percent evaluation from ''deafness with attacks of vertigo and cerebellar gait occurring once a week or less'' to ''hearing impairment with attacks of vertigo and cerebellar gait occurring from one to four times a month, with or without tinnitus,'' and by changing the requirements for a 30-percent evaluation from ''deafness with occasional vertigo'' to ''hearing impairment with vertigo less than once a month, with or without tinnitus.'' Tinnitus is commonly, but not universally, present in Meniere's syndrome. We included the phrase ''with or without tinnitus'' in these criteria to emphasize that the overall evaluation of Meniere's syndrome is the same whether or not tinnitus is present. This will avoid the assignment of a separate evaluation for tinnitus when evaluating the syndrome under DC 6205, and at the same time, indicate that the absence of tinnitus in certain cases has no effect on the evaluation to be assigned under DC 6205.

We proposed to retain ''deafness'' as one of the criteria at the 100-percent evaluation level of Meniere's syndrome (DC 6205). One commenter suggested that there be a footnote appended to the 100-percent level, signaling that entitlement to Special Monthly Compensation is payable.

We do not concur. A particular level of impaired hearing is not a requirement for the 100-percent level for Meniere's syndrome. The term ''deafness'' was meant to indicate any level of hearing impairment, and we have changed ''deafness'' to ''hearing impairment'' in the criteria for Meniere's syndrome to make that clear. The requirements for a 100-percent evaluation of Meniere's syndrome are met if there is any level

of hearing impairment, and vertigo and cerebellar gait occur more than once weekly. 38 CFR 3.350(a)(5), on the other hand, requires an absence of air and bone conduction and hearing loss equal to or greater than the minimum bilateral hearing loss required for a 100-percent rating, for entitlement to SMC on the basis of hearing impairment. For this reason, a footnote referring to entitlement to SMC is not appropriate here, and § 4.85(g) and the footnote to Table VII will assure consideration of SMC in any case of hearing impairment.

Another commenter suggested that we add a note under Meniere's syndrome instructing the rating agency that hearing impairment will be rated separately and combined. We did not adopt this suggestion because the evaluation criteria and percentages are based on all of the manifestations of Meniere's syndrome, with attacks often consisting of hearing impairment, vertigo, tinnitus, and staggering gait. Any of the symptoms may be intermittent. It would be contrary to 38 CFR 4.14 (Avoidance of pyramiding), which prohibits the evaluation of the same manifestation under different diagnoses, to evaluate hearing impairment separately, and also use it to support an evaluation under DC 6205. However, we have added a note stating that Meniere's syndrome may be evaluated either under DC 6205 or by separately evaluating vertigo (as a peripheral vestibular disorder), hearing impairment, and tinnitus, whichever method results in a higher overall evaluation. The note also prohibits combining an evaluation for hearing impairment, tinnitus, or vertigo with an evaluation under DC 6205.

The previous schedule provided a minimum 10-percent evaluation for malignant neoplasms of the ear, DC 6208. We proposed to delete the minimum evaluation. One commenter suggested that we reinstate the minimum 10-percent evaluation because it was meant to compensate for skull loss.

In our judgment, loss of function is the most accurate and equitable basis for evaluating the residuals of this condition. If a malignant neoplasm results in skull loss, the skull loss would be separately evaluated under the skeletal system (DC 5296).

The previous rating schedule provided a 10-percent evaluation for tinnitus, DC 6260, with the criteria being: ''persistent as a symptom of head injury, concussion or acoustic trauma.'' We proposed to remove the requirement that tinnitus be a symptom of head injury, concussion or acoustic trauma and that it be persistent and instead provide a 10-percent evaluation for recurrent tinnitus. One commenter suggested that we add a note following tinnitus instructing that the evaluation for tinnitus be combined with ratings for hearing impairment, suppurative otitis media, and peripheral vestibular disorder.

We agree and have added a note under DC 6260 stating that a separate evaluation for tinnitus under DC 6260 may be combined with an evaluation under DC's 6100, 6200, 6204, or other diagnostic code except when tinnitus supports an evaluation under one of those diagnostic codes.

We added the word ''nonsuppurative'' to the proposed title of DC 6201, ''chronic nonsuppurative otitis media with effusion (serous otitis media),'' to better distinguish it from DC 6200, ''chronic suppurative otitis media, mastoiditis, or cholesteatoma.'' We also made additional nonsubstantive changes throughout this final rule for the sake of clarity and succinctness.

The Secretary hereby certifies that this regulatory amendment will not have a significant economic impact on a substantial number of small entities as they are defined in the Regulatory Flexibility Act, 5 U.S.C. 601–612. The reason for this certification is that this amendment would not directly affect any small entities. Only VA beneficiaries could be directly affected. Therefore, pursuant to 5 U.S.C. 605 (b), this amendment is exempt from the initial and final regulatory flexibility analysis requirements of sections 603 and 604.

This regulatory action has been reviewed by the Office of Management and Budget under Executive Order 12866.

The Catalog of Federal Domestic Assistance numbers are 64.104 and 64.109.

List of Subjects in 38 CFR Part 4

Disability benefits, Individuals with disabilities, Pensions, Veterans.

Approved: January 8, 1999.

Togo D. West, Jr.,

Secretary of Veterans Affairs.

For the reasons set out in the preamble, 38 CFR part 4 is amended as set forth below:

PART 4—SCHEDULE FOR RATING DISABILITIES

1. The authority citation for part 4 continues to read as follows:

Authority: 38 U.S.C. 1155.

Subpart B—Disability Ratings

2. Section 4.85 is revised to read as follows:

§ 4.85 Evaluation of hearing impairment.

(a) An examination for hearing impairment for VA purposes must be conducted by a state-licensed audiologist and must include a controlled speech discrimination test (Maryland CNC) and a puretone audiometry test. Examinations will be conducted without the use of hearing aids.

(b) Table VI, ''Numeric Designation of Hearing Impairment Based on Puretone Threshold Average and Speech Discrimination,'' is used to determine a Roman numeral designation (I through XI) for hearing impairment based on a combination of the percent of speech discrimination (horizontal rows) and the puretone threshold average (vertical columns). The Roman numeral designation is located at the point where the percentage of speech discrimination and puretone threshold average intersect.

(c) Table VIa, ''Numeric Designation of Hearing Impairment Based Only on Puretone Threshold Average,'' is used to determine a Roman numeral designation (I through XI) for hearing impairment based only on the puretone threshold average. Table VIa will be used when the examiner certifies that use of the speech discrimination test is not appropriate because of language difficulties, inconsistent speech discrimination scores, etc., or when indicated under the provisions of § 4.86.

(d) ''Puretone threshold average,'' as used in Tables VI and VIa, is the sum of the puretone thresholds at 1000, 2000, 3000 and 4000 Hertz, divided by four. This average is used in all cases (including those in § 4.86) to determine the Roman numeral designation for hearing impairment from Table VI or VIa.

(e) Table VII, ''Percentage Evaluations for Hearing Impairment,'' is used to determine the percentage evaluation by combining the Roman numeral designations for hearing impairment of each ear. The horizontal rows represent the ear having the better hearing and the vertical columns the ear having the poorer hearing. The percentage evaluation is located at the point where the row and column intersect.

(f) If impaired hearing is service-connected in only one ear, in order to determine the percentage evaluation from Table VII, the non-service-connected ear will be assigned a Roman Numeral designation for hearing

impairment of I, subject to the provisions of § 3.383 of this chapter.

(g) When evaluating any claim for impaired hearing, refer to § 3.350 of this chapter to determine whether the veteran may be entitled to special monthly compensation due either to deafness, or to deafness in combination with other specified disabilities.

(h) *Numeric tables VI, VIA*, and VII.*

BILLING CODE 8320–01–P

TABLE VI

NUMERIC DESIGNATION OF HEARING IMPAIRMENT BASED ON PURETONE THRESHOLD AVERAGE AND SPEECH DISCRIMINATION

Puretone Threshold Average

% of discrim-ination	0-41	42-49	50-57	58-65	66-73	74-81	82-89	90-97	98+
92-100	I	I	I	II	II	II	III	III	IV
84-90	II	II	II	III	III	III	IV	IV	IV
76-82	III	III	IV	IV	IV	V	V	V	V
68-74	IV	IV	V	V	VI	VI	VII	VII	VII
60-66	V	V	VI	VI	VII	VII	VIII	VIII	VIII
52-58	VI	VI	VII	VII	VIII	VIII	VIII	VIII	IX
44-50	VII	VII	VIII	VIII	VIII	IX	IX	IX	X
36-42	VIII	VIII	VIII	IX	IX	IX	X	X	X
0-34	IX	X	XI	XI	XI	XI	XI	XI	XI

TABLE VIA*

NUMERIC DESIGNATION OF HEARING IMPAIRMENT BASED ONLY ON PURETONE THRESHOLD AVERAGE

Puretone Threshold Average

0-41	42-48	49-55	56-62	63-69	70-76	77-83	84-90	91-97	98-104	105+
I	II	III	IV	V	VI	VII	VIII	IX	X	XI

* This table is for use only as specified in §§ 4.85 and 4.86.

TABLE VII

PERCENTAGE EVALUATION FOR HEARING IMPAIRMENT (DIAGNOSTIC CODE 6100)

Poorer Ear

Better Ear	XI	X	IX	VIII	VII	VI	V	IV	III	II	I
XI	100*										
X	90	80									
IX	80	70	60								
VIII	70	60	50	50							
VII	60	60	50	40	40						
VI	50	50	40	40	30	30					
V	40	40	40	30	30	20	20				
IV	30	30	30	20	20	20	10	10			
III	20	20	20	20	20	10	10	10	0		
II	10	10	10	10	10	10	10	0	0	0	
I	10	10	0	0	0	0	0	0	0	0	0

* Review for entitlement to special monthly compensation under §3.350 of this chapter.

BILLING CODE 8320–01–C

3. Section 4.86 is revised to read as follows:

§ 4.86 Exceptional patterns of hearing impairment.

(a) When the puretone threshold at each of the four specified frequencies (1000, 2000, 3000, and 4000 Hertz) is 55 decibels or more, the rating specialist will determine the Roman numeral designation for hearing impairment from either Table VI or Table VIa, whichever results in the higher numeral. Each ear will be evaluated separately.

(b) When the puretone threshold is 30 decibels or less at 1000 Hertz, and 70 decibels or more at 2000 Hertz, the rating specialist will determine the Roman numeral designation for hearing impairment from either Table VI or Table VIa, whichever results in the higher numeral. That numeral will then be elevated to the next higher Roman numeral. Each ear will be evaluated separately.

(Authority: 38 U.S.C. 1155)

§ 4.86a [Removed]

4. Section 4.86a is removed.

5. Section 4.87 is revised to read as follows:

§ 4.87 Schedule of ratings—ear.

	Rating
DISEASES OF THE EAR	
6200 Chronic suppurative otitis media, mastoiditis, or cholesteatoma (or any combination):	
During suppuration, or with aural polyps	10
Note: Evaluate hearing impairment, and complications such as labyrinthitis, tinnitus, facial nerve paralysis, or bone loss of skull, separately.	
6201 Chronic nonsuppurative otitis media with effusion (serous otitis media):	
Rate hearing impairment	
6202 Otosclerosis:	
Rate hearing impairment	
6204 Peripheral vestibular disorders:	
Dizziness and occasional staggering	30
Occasional dizziness	10
Note: Objective findings supporting the diagnosis of vestibular disequilibrium are required before a compensable evaluation can be assigned under this code. Hearing impairment or suppuration shall be separately rated and combined.	
6205 Meniere's syndrome (endolymphatic hydrops):	
Hearing impairment with attacks of vertigo and cerebellar gait occurring more than once weekly, with or without tinnitus	100
Hearing impairment with attacks of vertigo and cerebellar gait occurring from one to four times a month, with or without tinnitus	60
Hearing impairment with vertigo less than once a month, with or without tinnitus	30
Note: Evaluate Meniere's syndrome either under these criteria or by separately evaluating vertigo (as a peripheral vestibular disorder), hearing impairment, and tinnitus, whichever method results in a higher overall evaluation. But do not combine an evaluation for hearing impairment, tinnitus, or vertigo with an evaluation under diagnostic code 6205.	
6207 Loss of auricle:	
Complete loss of both	50
Complete loss of one	30
Deformity of one, with loss of one-third or more of the substance	10
6208 Malignant neoplasm of the ear (other than skin only)	100
Note: A rating of 100 percent shall continue beyond the cessation of any surgical, radiation treatment, antineoplastic chemotherapy or other therapeutic procedure. Six months after discontinuance of such treatment, the appropriate disability rating shall be determined by mandatory VA examination. Any change in evaluation based on that or any subsequent examination shall be subject to the provisions of § 3.105(e) of this chapter. If there has been no local recurrence or metastasis, rate on residuals.	
6209 Benign neoplasms of the ear (other than skin only):	
Rate on impairment of function.	
6210 Chronic otitis externa:	
Swelling, dry and scaly or serous discharge, and itching requiring frequent and prolonged treatment	10
6211 Tympanic membrane, perforation of	0
6260 Tinnitus, recurrent	10
Note: A separate evaluation for tinnitus may be combined with an evaluation under diagnostic codes 6100, 6200, 6204, or other diagnostic code, except when tinnitus supports an evaluation under one of those diagnostic codes.	

(Authority: 38 U.S.C. 1155)

6. Section 4.87a is revised to read as follows:

§ 4.87a Schedule of ratings—other sense organs.

	Rating
6275 Sense of smell, complete loss	10
6276 Sense of taste, complete loss	10
Note: Evaluation will be assigned under diagnostic codes 6275 or 6276 only if there is an anatomical or pathological basis for the condition.	

(Authority: 38 U.S.C. 1155)

§ 4.87b [Removed]

7. Section 4.87b is removed.

[FR Doc. 99–11768 Filed 5–10–99; 8:45 am]

BILLING CODE 8320–01–P

ENVIRONMENTAL PROTECTION AGENCY

40 CFR Part 52

[NV 030–0015; FRL–6339–4]

Clean Air Act Approval and Promulgation of New Source Review Provisions Implementation Plan for Nevada State Clark County Air Pollution Control District

AGENCY: Environmental Protection Agency (EPA).

ACTION: Final rule.

SUMMARY: The EPA is promulgating approval of the new source review (NSR) program submitted by the Clark County Air Pollution Control District (CCAPCD) for the purpose of meeting the nonattainment and prevention of significant deterioration (PSD) NSR requirements of the Clean Air Act, as amended in 1990 (CAA or the Act). The requested revision was submitted by the State to satisfy certain Federal requirements for an approvable nonattainment new source review SIP. This submittal also satisfies the requirements for a Prevention of Significant Deterioration (PSD) program. The intended effect of this rulemaking is to regulate air pollution in accordance with the Act. Thus, EPA is finalizing the approval of these revisions into the Nevada state implementation plan (SIP) under provisions of the CAA regarding EPA action on SIP submittals, SIPs for national primary and secondary ambient air quality standards and plan requirements for nonattainment areas.

EFFECTIVE DATE: This action is effective on June 10, 1999.

ADDRESSES: Copies of the rules and EPA's evaluation report for the rules are available for public inspection at EPA's Region IX office during normal business hours. Copies of the submitted rules are available for inspection at the following locations:

Permits Office (Air-3), Air Division, EPA Region IX, 75 Hawthorne Street, San Francisco, CA 94105

Environmental Protection Agency, Air Docket (6102), 401 ''M'' Street, SW, Washington, DC 20406.

Clark County Health District, 625 Shadow Lane, Las Vegas, NV 89127

Nevada Division of Environmental Protection, 333 W. Nye Lane, Carson City, NV 89710

FOR FURTHER INFORMATION CONTACT: Steve Branoff, Environmental Engineer, Permits Office (Air-3), Air Division, EPA Region IX, 75 Hawthorne Street, San Francisco, CA 94105, Telephone: (415) 744–1290.

SUPPLEMENTARY INFORMATION:

Background and Purpose

The air quality planning requirements for nonattainment NSR are set out in Part D of Title I of the Act, with implementing regulations at 40 CFR 51.160 through 51.165. The air quality planning requirements for PSD are set out in Part C of Title I of the Act, with implementing regulations at 40 CFR 51.166. On November 30, 1993, CCAPCD submitted its NSR rules to EPA as a proposed revision to the SIP. On July 28, 1995, EPA proposed to approve with contingencies, and to disapprove in the alternative, the submitted SIP revisions. See 61 FR 17675. Full approval as a final action was contingent upon CCAPCD making required changes to the submitted rules. EPA requested public comments on the proposed approval and received none.

CCAPCD has since submitted to EPA revised NSR rules. The revisions contain the required changes and EPA is therefore promulgating final approval of the revised rules. The specific changes that CCAPCD made to its rules are detailed below.

The Clark County Board of Health (the governing board for the CCAPCD) adopted changes to the new source review rules in ''installments'' at public hearings on December 21, 1995; December 19, 1996; January 23, 1997; April 24, 1997; June 26, 1997, January 22, 1998 and April 23, 1998. There was substantial input from the public and the regulated community at these

hearings and the workshops that preceded them.

For Rule 58, CCAPCD submitted the revised rule to the State of Nevada for inclusion to the SIP on November 18, 1996. The State submitted Rule 58 to EPA on January 17, 1997. The SIP revision was reviewed by EPA and determined to be complete on March 10, 1997. For Rules 0 and 12, CCAPCD submitted the revised rules to the State of Nevada for inclusion to the SIP on March 3, 1999. The State submitted Rules 0 and 12 to EPA on March 15, 1999. The SIP revision was reviewed by EPA and determined to be complete on March 30, 1999.

In its July 28, 1995 proposed approval, EPA identified a number of deficiencies in CCAPCD's November 30, 1993 submittal which had to be corrected as a condition of full approval. At that time, CCAPCD had proposed draft rules which corrected the deficiencies. EPA's technical support document (TSD) for the July 28, 1995 proposed approval contains a discussion of how CCAPCD's proposed draft rules would correct the deficiencies, as well as how they would meet the general NSR requirements of the Act. The rules in CCAPCD's current submittal are substantially similar to the draft rules upon which EPA based its proposed approval. Below is a discussion of the portions of CCAPCD's January 17, 1997 and March 15, 1999 submittals which correct the deficiencies identified by EPA.

Corrected Deficiencies

Rule 0

Modification: In its July 28, 1995 proposed approval, EPA specified that ''the rule fails to require review for modifications which involve a major increase in actual emissions, but no increase in potential to emit. To correct this deficiency, calculations in the District rule must be based on increases in actual emissions.'' In the March 15, 1999 submittal, CCAPCD corrected the definition of modification to reference a change resulting in a ''net emissions increase.'' As suggested in EPA's proposed approval, the federal definition of ''net emissions increase'' was also incorporated into the rule. In concert, these definitions satisfy EPA's requirement for review of modifications.

Regulated Air Pollutant: EPA specified that ''the definition of regulated air pollutant in the submitted rule . . . should be corrected for rule consistency.'' With revisions to the definition in the March 15, 1999 submittal, CCAPCD satisfies EPA's suggestion.

Volatile Organic Compound: EPA's proposed approval described CCAPCD's definition of Volatile Organic Compound ''contains a list of substances exempt from regulation as VOCs which is inconsistent with the exemption list in 40 CFR 51.100(s).'' CCAPCD's March 15, 1999 submittal corrected this discrepancy by incorporating the CFR definition verbatim. This language satisfies EPA's requirements.

Rule 12

Public Notice: In its July 28, 1995 proposed approval, EPA specified that a ''thirty-day public comment period should be required for each permit application, as specified by 40 CFR 51.166(q). All public comment, oral and written, received within the specified time, should be considered in making the final decision on the approvability of the permit application.'' The March 15, 1999 submittal includes section 12.3.4.2, to require consideration of public comments, and section 12.3.4 to require a minimum thirty-day public comment period. The addition of these sections satisfies EPA's requirements.

Variance to Rule Requirements: EPA specified that ''no variance may be granted to a source required by federal standards to undergo new source review.'' The March 15, 1999 submittal removed provisions for a variance to the major source impact analysis for NO_X and therefore satisfies EPA's requirements in that regard.

Fugitive Emissions: EPA's proposed approval explained that ''fugitives must also be included in the major source applicability determination, defined by a source's potential to emit, for all other regulated pollutants, if the source belongs to one of the source categories listed in 40 CFR 51.165(a)(1)(iv)(C).'' Revisions to the definitions of potential to emit, section 0.116, and stationary source, section 0.133, ensured that fugitive emissions would be included in applicability determination. The language in the March 15, 1999 submittal satisfies EPA's requirements.

Additional Impact Analysis for Attainment Pollutants: EPA specified that the rule failed to require an additional impact analysis for VOC, lead and CO: ''The rule must be amended to require the additional impact analysis for pollutants subject to regulation under the Act which will be emitted by the new source or modifications.'' In sections 12.2.5.7, 12.2.10.6, 12.2.13.6, 12.2.15.7, 12.2.16.7, and 12.2.17.6, the March 15, 1999 submittal requires such analysis for all criteria pollutants at major sources and major modifications in attainment areas. The language satisfies EPA's requirement.

Alternative Siting Analysis: EPA specified that the rule lacked a requirement that an alternative siting analysis, required by CAA section 173(a)(5), be performed by all permit applicants for sources located within a nonattainment area. CCAPCD has added section 12.1.4.1.k to require a demonstration that the benefits of a proposed major source or modification significantly outweigh the environmental and social costs imposed as a result of its location in the non-attainment area. The language in the March 15, 1999 submittal satisfies EPA's requirements.

Class I Area Visibility Protection: EPA specified that the rule lacked the visibility protection requirements of CAA section 169(a) and described in 40 CFR 51.307. While there are currently no Class I areas in Clark County, the requirement needed to be incorporated into the rule. The March 15, 1999 submittal included such provisions in sections 12.2.5.8, 12.2.10.7, 12.2.13.7, 12.2.15.8, 12.2.16.8, and 12.2.17.7 and satisfies EPA's requirements.

PSD Ambient Air Increments: EPA specified that the rule lacked ''provisions which set the maximum allowable increases in PM–10, SO2, and NO2 to those increments listed in 40 CFR 51.166(c), for designated attainment or unclassifiable areas.'' The March 15, 1999 submittal lists these increments in sections 12.2.5.6, 12.2.15.6, and 12.2.16.6, and therefore satisfies EPA's requirements.

Offsets: EPA specified that the submitted rule failed to meet the requirements of CAA section 173, which requires offsets to be federally enforceable prior to the issuance of an Authority to Construct Permit, and in effect by the time operation commences. The March 15, 1999 submittal lists this requirement in sections 12.4.1.4, 12.4.2.4, 12.4.3.4, and 12.4.4.4 and therefore satisfies EPA's requirements.

Additional Requirements: EPA specified that the submitted rule failed to ''require new source review for a source or modification which becomes major due to a relaxation in a federally-enforceable limit.'' Section 0.133.b.2 of the March 15, 1999 submittal includes the following language from the ''major stationary source'' definition in 40 CFR 51.165(a)(5)(ii): ''at such time that a particular source or modification becomes a major stationary source . . . the requirements of regulations approved pursuant to this shall apply to the source or modification as though construction had not yet commenced.'' This satisfies EPA's requirements.

Hazardous Air Pollutants: EPA specified that the rule's list of hazardous air pollutants needed to ''include the pollutants listed in 40 CFR 51.166(b)(23)(I), which are not also regulated by Section 112(b)(1) of the Act.'' The March 15, 1999 submittal includes definition 0.123, ''Regulated Air Pollutant,'' which satisfies EPA's requirements under PSD.

Rule 58

Adjustment at Time of Use: EPA noted the submitted rule was not clear that emission reduction credits (ERCs) must be surplus at time of use to all federally-enforceable requirements, including, but not limited to, Reasonably Available Control Technology (RACT) requirements. Section 58.8 of the January 17, 1997 submittal prescribes that ERCs must be surplus at the time of use. This satisfies EPA's requirements.

Prior Shutdowns: EPA specified that the submitted rule must not disallow ''prior shutdown'' credits as required in 40 CFR 51.165(a)(1)(xxv). Section 58.3.3.1 of the January 17, 1997 submittal limits shutdown credits as defined by this CFR section. The federal regulation limits shutdown credits either when the District attainment plan has been disapproved, or when this plan is not yet due, but a due date during the creation of this plan is missed. In this case, sources which seek ERCs due to a shutdown must do so at the time operation of the source ceases. This section satisfies EPA's requirements.

Property Rights: EPA specified that the submitted rule incorrectly referred to procedures for banking ERCs ''in a legally protected manner.'' The January 17, 1997 submittal did not include language suggesting that banked ERCs could be protected under property rights laws and, therefore, this submittal can be approved by EPA.

Mobile and Area Sources: EPA specified that the submitted rule allowed reductions generated by mobile and area sources to be credited as ERCs which may be used as offsets but failed to provide for the federal enforceability and quantification of these credits. The January 17, 1997 submittal removed all credits for area and mobile source reductions and therefore can be approved by EPA.

Final Action and Implications

EPA is promulgating final approval of CCAPCD's NSR program as submitted on January 17, 1997 and on March 15, 1999. This submittal consists of Clark County Air Pollution Control Regulations sections 0 (Definitions), 12 (Preconstruction Review for New or Modified Stationary Sources), and 58 (Emission Reduction Credits).

EPA did not receive any comments on the changes detailed above that were necessary to make CCAPCD's program fully approvable. The scope of this approval applies to all new or modified sources (as defined in the program) within the Clark County Air Pollution Control District.

Scope of This Approval

As discussed above, the submitted rules (0, 12, and 58) contain provisions which satisfy the federal requirements for approval of nonattainment New Source Review (NSR) and Prevention of Significant Deterioration (PSD) programs. In addition, these rules contain provisions which are outside the scope of the above two programs, such as requirements for stationary sources of hazardous air pollutants and requirements for both minor stationary sources and stationary sources located in attainment areas to obtain emission reduction credits. Today's approval of rules 0, 12, and 58 is promulgated for the purpose of meeting the nonattainment and PSD program requirements of the Clean Air Act only, and does not imply approval of requirements contained in these rules for any other purpose. Therefore, approval of these rules does not constitute approval of the CCAPCD requirements to develop a program to regulate new or modified sources of hazardous air pollutants, as described by section 112(g) of the Act. In addition, approval of these rules does not constitute approval of emission reduction credit programs (such as the ''road paving'' offset program contained in section 12.4.5 of the current submittal) for the purpose of ensuring emissions reductions required to reach attainment of the PM–10 or PM–2.5 national ambient air quality standards.

Administrative Review

Copies of CCAPCD's submittal and other information relied upon for this final approval are contained in docket number NSRR 2–95 CCAPCD, at the EPA Regional Office. The docket is an organized and complete file of all the information submitted to, or otherwise considered by, EPA in development of this final approval. The docket is available for public inspection at the location listed under the **ADDRESSES** section of this document.

Administrative Requirements

A. Executive Order 12866

The Office of Management and Budget (OMB) has exempted this regulatory action from Executive Order (E.O.) 12866, Regulatory Planning and Review.

B. Executive Order 12875

Under Executive Order 12875, Enhancing the Intergovernmental Partnership, EPA may not issue a regulation that is not required by statute and that creates a mandate upon a State, local or tribal government, unless the Federal government provides the funds necessary to pay the direct compliance costs incurred by those governments, or EPA consults with those governments. If EPA complies by consulting, Executive Order 12875 requires EPA to provide to the Office of Management and Budget a description of the extent of EPA's prior consultation with representatives of affected State, local and tribal governments, the nature of their concerns, copies of any written communications from the governments, and a statement supporting the need to issue the regulation. In addition, Executive Order 12875 requires EPA to develop an effective process permitting elected officials and other representatives of State, local and tribal governments ''to provide meaningful and timely input in the development of regulatory proposals containing significant unfunded mandates.'' Today's rule does not create a mandate on State, local or tribal governments. The rule does not impose any enforceable duties on these entities. Accordingly, the requirements of section 1(a) of E.O. 12875 do not apply to this rule.

C. Executive Order 13045

Protection of Children from Environmental Health Risks and Safety Risks (62 FR 19885, April 23, 1997), applies to any rule that: (1) is determined to be ''economically significant'' as defined under E.O. 12866, and (2) concerns an environmental health or safety risk that EPA has reason to believe may have a disproportionate effect on children. If the regulatory action meets both criteria, the Agency must evaluate the environmental health or safety effects of the planned rule on children, and explain why the planned regulation is preferable to other potentially effective and reasonably feasible alternatives considered by the Agency. This rule is not subject to E.O. 13045 because it does not involve decisions intended to mitigate environmental health or safety risks.

D. Executive Order 13084

Under Executive Order 13084, Consultation and Coordination with Indian Tribal Governments, EPA may

not issue a regulation that is not required by statute, that significantly or uniquely affects the communities of Indian tribal governments, and that imposes substantial direct compliance costs on those communities, unless the Federal government provides the funds necessary to pay the direct compliance costs incurred by the tribal governments, or EPA consults with those governments. If EPA complies by consulting, Executive Order 13084 requires EPA to provide to the Office of Management and Budget, in a separately identified section of the preamble to the rule, a description of the extent of EPA's prior consultation with representatives of affected tribal governments, a summary of the nature of their concerns, and a statement supporting the need to issue the regulation. In addition, Executive Order 13084 requires EPA to develop an effective process permitting elected officials and other representatives of Indian tribal governments ''to provide meaningful and timely input in the development of regulatory policies on matters that significantly or uniquely affect their communities.'' Today's rule does not significantly or uniquely affect the communities of Indian tribal governments. Accordingly, the requirements of section 3(b) of E.O. 13084 do not apply to this rule.

E. Regulatory Flexibility Act

The Regulatory Flexibility Act (RFA) generally requires an agency to conduct a regulatory flexibility analysis of any rule subject to notice and comment rulemaking requirements unless the agency certifies that the rule will not have a significant economic impact on a substantial number of small entities. Small entities include small businesses, small not-for-profit enterprises, and small governmental jurisdictions. This final rule will not have a significant impact on a substantial number of small entities because SIP approvals under section 110 and subchapter I, part D of the Clean Air Act do not create any new requirements but simply approve requirements that the State is already imposing. Therefore, because the Federal SIP approval does not create any new requirements, I certify that this action will not have a significant economic impact on a substantial number of small entities. Moreover, due to the nature of the Federal-State relationship under the Clean Air Act, preparation of flexibility analysis would constitute Federal inquiry into the economic reasonableness of state action. The Clean Air Act forbids EPA to base its actions concerning SIPs on such grounds. *Union Electric Co.,* versus *U.S. EPA,* 427 U.S. 246, 255–66 (1976); 42 U.S.C. 7410(a)(2).

F. Unfunded Mandates

Under section 202 of the Unfunded Mandates Reform Act of 1995 (''Unfunded Mandates Act''), signed into law on March 22, 1995, EPA must prepare a budgetary impact statement to accompany any proposed or final rule that includes a Federal mandate that may result in estimated annual costs to State, local, or tribal governments in the aggregate; or to private sector, of $100 million or more. Under section 205, EPA must select the most cost-effective and least burdensome alternative that achieves the objectives of the rule and is consistent with statutory requirements. Section 203 requires EPA to establish a plan for informing and advising any small governments that may be significantly or uniquely impacted by the rule.

EPA has determined that the approval action promulgated does not include a Federal mandate that may result in estimated annual costs of $100 million or more to either State, local, or tribal governments in the aggregate, or to the private sector. This Federal action approves pre-existing requirements under State or local law, and imposes no new requirements. Accordingly, no additional costs to State, local, or tribal governments, or to the private sector, result from this action.

G. Petitions for Judicial Review

Under section 307(b)(1) of the Clean Air Act, petitions for judicial review of this action must be filed in the United States Court of Appeals for the appropriate circuit by July 12, 1999. Filing a petition for reconsideration by the Administrator of this final rule does not affect the finality of this rule for the purposes of judicial review nor does it extend the time within which a petition for judicial review may be filed, and shall not postpone the effectiveness of such rule or action. This action may not be challenged later in proceedings to enforce its requirements. (See section 307(b)(2).)

H. Submission to Congress and the Comptroller General

The Congressional Review Act, 5 U.S.C. 801 *et seq.,* as added by the Small Business Regulatory Enforcement Fairness Act of 1996, generally provides that before a rule may take effect, the agency promulgating the rule must submit a rule report, which includes a copy of the rule, to each House of the Congress and to the Comptroller General of the United States. EPA will submit a report containing this rule and other required information to the U.S. Senate, the U.S. House of Representatives, and the Comptroller General of the United States prior to publication of the rule in the **Federal Register**. This rule is not a ''major'' rule as defined by 5 U.S.C. 804(2).

List of Subjects in 40 CFR Part 52

Environmental Protection, Air pollution control, Carbon monoxide, Intergovernmental relations, Nitrogen dioxide, Ozone, Particulate matter, Reporting and recordkeeping requirements, Sulfur oxides, and Volatile organic compounds.

Note: Incorporation by reference of the State Implementation Plan for the State of Nevada was approved by the Director of the **Federal Register** on July 1, 1982.

Dated: April 21, 1999.

Felicia Marcus,

Regional Administrator, Region IX.

Part 52, Chapter I, Title 40 of the Code of Federal Regulations is amended as follows:

PART 52—[AMENDED]

1. The authority citation for part 52 continues to read as follows:

Authority: 42 U.S.C. 7401 *et seq.*

Subpart DD—Nevada

2. Section 52.1470 is amended by adding paragraphs (c)(36) and (c)(37) to read as follows:

§ 52.1470 Identification of plan.

* * * * *

(c) * * *

(36) On January 17, 1997, regulations for the following Health District were submitted by the Governor's designee.

(i) Incorporation by reference.

(A) Clark County Air Pollution Control District.

(*1*) Section 58 revised on December 21, 1995.

(37) On March 15, 1999, regulations for the following Health District were submitted by the Governor's designee.

(i) Incorporation by reference.

(A) Clark County Air Pollution Control District.

(*1*) Sections 0 and 12 revised on April 23, 1998.

[FR Doc. 99–11708 Filed 5–10–99; 8:45 am]

BILLING CODE 6560–50–P

ENVIRONMENTAL PROTECTION AGENCY

40 CFR Part 52

[UT10–1–6700a; UT–001–0014a; UT–001–0015a; FRL–6340–1]

Approval and Promulgation of Air Quality Implementation Plans; Utah; Foreword and Definitions, Revision to Definition for Sole Source of Heat and Emissions Standards, Nonsubstantive Changes; General Requirements, Open Burning and Nonsubstantive Changes; and Foreword and Definitions, Addition of Definition for PM_{10} Nonattainment Area

AGENCY: Environmental Protection Agency (EPA).

ACTION: Direct final rule; withdrawal.

SUMMARY: On March 26, 1999, EPA published a direct final rule (64 FR 14620) approving, and an accompanying proposed rule (62 FR 26463) proposing to approve, revisions submitted by the Governor of the State of Utah on July 11, 1994, February 6, 1996 and July 9, 1998. These revisions contain requirements for residential solid fuel burning and open burning, and add a definition for ''PM_{10} Nonattainment Area'' to the SIP. We are withdrawing this final rule due to adverse comment received from the Utah Petroleum Association on the portion of this action approving the ''PM_{10} Nonattainment Area'' definition. In a subsequent final rule, we will summarize and respond to the comment received and take final rulemaking action on this requested Utah SIP revision.

DATES: As of May 11, 1999, we withdraw the direct final rule published on March 26, 1999.

ADDRESSES: Copies of the documents relevant to this action are available for public inspection during normal business hours at the Air and Radiation Program, Environmental Protection Agency, Region VIII, 999 18th Street, Suite 500, Denver, Colorado, 80202.

FOR FURTHER INFORMATION CONTACT: Cindy Rosenberg, EPA, Region VIII, (303) 312–6436.

List of Subjects in 40 CFR Part 52

Environmental protection, Air pollution control, Incorporation by reference, Intergovernmental relations, Particulate matter, Reporting and recordkeeping requirements.

Dated: April 30, 1999.

Patricia D. Hull,

Acting Regional Administrator, Region VIII.

[FR Doc. 99–11829 Filed 5–10–99; 8:45 am]

BILLING CODE 6560–50–P

NATIONAL AERONAUTICS AND SPACE ADMINISTRATION

48 CFR Parts 1815, 1816, 1819, and 1852

Small Disadvantaged Business Participation Evaluation and Incentives

AGENCY: National Aeronautics and Space Administration (NASA).

ACTION: Final rule.

SUMMARY: This final rule conforms the NASA FAR Supplement (NFS) to recent changes made to the Federal Acquisition Regulation (FAR) regarding the evaluation and incentive for small disadvantaged business (SDB) participation in competitive negotiated acquisitions. Specifically, this rule requires that evaluation of SDB participation be limited to SDBs in the Major SIC Groups designated by the Department of Commerce, and that it be accomplished normally as a subfactor under the NASA Mission Suitability evaluation factor. This rule also limits incentives for use of SDB firms to an award fee provision or the designated FAR incentive clause provision. Moreover, both incentives are limited to use of SDBs in the designated Major SIC Groups. This rule also makes editorial revisions to reflect recent FAR terminology and clause title changes associated with implementation of the Historically Underutilized Business Zone (HUBZone) Empowerment Contracting Program. Finally, editorial changes are made to correct a NASA official's title and to eliminate an erroneous designation of the NASA Mentor-Protege program as a pilot program.

EFFECTIVE DATE: May 11, 1999.

FOR FURTHER INFORMATION CONTACT: Tom O'Toole, NASA Headquarters, Code HK, Washington, DC 20546, telephone: (202) 358–0478; email: *thomas.otoole@hq.nasa.gov*.

SUPPLEMENTARY INFORMATION:

Background

Federal Acquisition Circular 97–07 revised the FAR to prescribe procedures for the evaluation and incentive of SDB participation in Government contracts. With respect to evaluation, it required that the proposed participation of SDBs in the Department of Commerce designated Major SIC Groups be evaluated in unrestricted competitive negotiations expected to exceed $500,000 ($1,000,000 for construction). In addition, two forms of post-award incentives for use of SDBs in the designated SIC Major Groups were prescribed: the clause at 52.219–26, Small Disadvantaged Business Participation Program—Incentive Subcontracting, or an award fee provision. NASA procedures for award fee already required evaluation of SDB utilization, but needed revision to limit evaluation to SDBs in the designated Major SIC Groups.

Impact

Regulatory Flexibility Act

This final rule does not constitute a significant revision within the meaning of FAR 1.501 and Pub. L. 98–577, and publication for comments is not required. However, comments from small business entities concerning the affected NFS coverage will be considered in accordance with 5 U.S.C. 610. Such comments may be submitted separately and should cite 5 U.S.C. 601, *et seq.*

Paperwork Reduction Act

The Paperwork Reduction Act does not apply because the changes to the NFS do not impose any recordkeeping or information collection requirements, or collections of information from offerors, contractors, or members of the public that require the approval of the Office of Management and Budget under 44 U.S.C. 3501, *et seq.*

List of Subjects in 48 CFR Parts 1815, 1816, 1819, and 1852

Government procurement.

Tom Luedtke,

Acting Associate Administrator for Procurement.

Accordingly, 48 CFR Parts 1815, 1816, 1819, and 1852 are amended as follows:

PART 1815—CONTRACTING BY NEGOTIATION

1. The authority citation for 48 CFR Parts 1815, 1816, 1819, and 1852 continues to read as follows:

Authority: 42 U.S.C. 2473(c)(1).

2. In section 1815.304, the section heading is revised and paragraph (c) is added to read as follows:

1815.304 Evaluation factors and significant subfactors. (NASA supplements paragraph (c))

(c)(4)(A) The extent of participation of small disadvantaged business (SDB) concerns shall be evaluated as a subfactor under the Mission Suitability factor. If a Mission Suitability factor is not used, the SDB participation shall be evaluated as a separate factor or subfactor, as appropriate.

(B) SDB concerns that choose the FAR 19.11 price evaluation adjustment shall receive the lowest possible score/rating under the FAR 15.304(c)(4) evaluation.

3. In section 1815.304–70, paragraph (b)(2) is revised to read as follows:

1815.304–70 NASA evaluation factors.

* * * * *

(b) * * *

(2) The Mission Suitability factor may identify evaluation subfactors to further define the content of the factor. Each Mission Suitability subfactor shall be weighted and scored. The adjectival rating percentages in 1815.305(a)(3)(A) shall be applied to the subfactor weight to determine the point score. The number of Mission Suitability subfactors is limited to five. The Mission Suitability evaluation subfactors and their weights shall be identified in the RFP.

* * * * *

4. In section 1815.404–470, paragraph (c)(5) is revised to read as follows:

1815.404–470 NASA structured approach for profit or fee objective.

* * * * *

(c) * * *

(5) Federal socioeconomic programs. In addition to rewarding contractors for unusual initiative in supporting Government socioeconomic programs, failure or unwillingness on the part of the contractor to support these programs should be viewed as evidence of poor performance for the purpose of establishing this profit/fee objective factor. However, this factor does not apply to utilization of small disadvantaged businesses. Incentives for use of these firms may only be structured according to FAR 19.1203 and 19.1204(c).

* * * * *

PART 1816—TYPES OF CONTRACTS

5. In section 1816.405–274, paragraph (f) is revised to read as follows:

1816.405–274 Award fee evaluation factors.

* * * * *

(f)(1) The contractor's performance against the subcontracting plan incorporated in the contract shall be evaluated. Emphasis may be placed on the contractor's accomplishment of its goals for subcontracting with small business, HUBZone small business, and women-owned small business concerns.

(2) The contractor's performance against the contract target for participation as subcontractors by small disadvantaged business concerns in the SIC Major Groups designated by the Department of Commerce (see FAR 19.201(c)) shall also be evaluated if the clause at FAR 52.219–26, Small Disadvantaged Business Participation—Incentive Subcontracting, is not included in the contract (see FAR 19.1204(c)).

(3) The contractor's achievements in subcontracting high technology efforts as well as the contractor's performance under the Mentor-Protégé Program, if applicable, may also be evaluated.

(4) The evaluation weight given to the contractor's performance against the considerations in paragraphs (f)(1) through (f)(3) of this section should be significant (up to 15 percent of available award fee). The weight should motivate the contractor to focus management attention to subcontracting with small, HUBZone, and women-owned small business concerns, and with small disadvantaged business concerns in designated SIC Major Groups to the maximum extent practicable, consistent with efficient contract performance.

* * * * *

PART 1819—SMALL BUSINESS PROGRAMS

6. In section 1819.201, the section heading and paragraph (a) are revised and paragraph (f)(1) is added to read as follows:

1819.201 General Policy. (NASA supplements paragraphs (a), (c), (d), and (f))

(a)(i) NASA is committed to providing to small, HUBZone, small disadvantaged, and women-owned small business concerns, maximum practicable opportunities to participate in Agency acquisitions at the prime contract level. The participation of NASA prime contractors in providing subcontracting opportunities to such entities is also an essential part of the Agency's commitment. The participation of these entities is particularly emphasized in high-technology areas where they have not traditionally dominated.

(ii) NASA annually negotiates Agency small, HUBZone, small disadvantaged, and women-owned small business prime and subcontracting goals with the Small Business Administration pursuant to section 15(g) of the Small Business Act (15 U.S.C. 644). In addition, NASA has the following statutory goals based on the total value of prime and subcontract awards:

(A) Under Public Laws 101–144, 101–507, and 102–389, an annual goal of at least 8 percent for prime and subcontract awards to small disadvantaged business (SDB) concerns, Historically Black Colleges and Universities (HBCUs), minority institutions (MIs), and women-owned small businesses (WOSBs) (see 1819.7000); and

(B) Under 10 U.S.C. 2323, an annual goal of 5 percent for prime and subcontract awards to SDBs, HBCUs, and WOSBs.

* * * * *

(f)(1) The NASA Ombudsman, the Deputy Associate Administrator for Procurement (Code H), is the designated official for determining whether the use of the SDB mechanism in FAR subpart 19.11 has resulted in an undue burden on non-SDB firms in the Department of Commerce designated SIC Major Groups, or is otherwise inappropriate.

1819.202–170 [Amended]

7. In the last sentence to section 1819.202–170, the word ''(Technical)'' is removed.

1819.705–470 [Amended]

8. In the last sentence to section 1819.705–470, the word '', HUBZone,'' is added before the phrase ''and women-owned small business concerns''.

9. Section 1819.708–70 is revised to read as follows:

1819.708–70 NASA solicitation provision and contract clause.

(a) The contracting officer shall insert the provision at 1852.219–73, Small Business Subcontracting Plan, in invitations for bids containing the clause at FAR 52.219–9 with its Alternate I. Insert in the last sentence the number of calendar days after request that the offeror must submit a complete plan.

(b) The contracting officer shall insert the clause at 1852.21975, Small Business Subcontracting Reporting, in solicitations and contracts containing the clause at FAR 52.219–9, except for contracts covered by an approved commercial plan.

PART 1852—SOLICITATION PROVISIONS AND CONTRACT CLAUSES

10. In section 1852.219–73, the section title, date, and paragraph (b) are revised to read as follows:

1852.219–73 Small Business Subcontracting Plan.

As prescribed in 1819.708–70(a), insert the following provision:

Small Business Subcontracting Plan

May 1999

* * * * *

(b) The contract expected to result from this solicitation will contain FAR clause 52.219–9, ''Small Business Subcontracting Plan.'' The apparent low bidder must submit the complete plan within [Insert number of days] calendar days after request by the Contracting Officer.

(End of provision)

11. In section 1852.219–75, the section title and date are revised to read as follows:

1852.219–75 Small Business Subcontracting Reporting.

* * * * *

Small Business Subcontracting Reporting

May 1999

* * * * *

1852.219–77 [Amended]

12. In section 1852.219–77, the date is revised to read ''May 1999'' and in paragraph (d), the word ''pilot'' is removed.

[FR Doc. 99–11885 Filed 5–10–99; 8:45 am]

BILLING CODE 7510–01–P

DEPARTMENT OF THE INTERIOR

Fish and Wildlife Service

50 CFR Part 17

Endangered and Threatened Wildlife and Plants; Notice of Reclassification of *Lesquerella stonensis* (Stones River bladderpod)

AGENCY: Fish and Wildlife Service, Interior.

ACTION: Notice of candidate taxa reclassification.

SUMMARY: In this document, we explain the changes in the status of *Lesquerella stonensis* (Stones River bladderpod), a plant that is under review for possible addition to the List of Endangered and Threatened Plants under the Endangered Species Act of 1973, as amended (Act). We are removing this species from candidate status at this time.

ADDRESSES: You may submit questions concerning this notice to the Chief, Division of Endangered Species, U.S. Fish and Wildlife Service, 1849 C Street, N.W., Mail Stop 452 ARLSQ, Washington, D.C. 20240.

FOR FURTHER INFORMATION CONTACT: Chief, Division of Endangered Species (see **ADDRESSES** section) (telephone: 703/358–2171).

SUPPLEMENTARY INFORMATION:

Background

Candidate taxa are those taxa for which we have on file sufficient information to support issuance of a proposed rule to list under the Act. In addition to our annual review of all candidate taxa, we have an on-going review process, particularly to update taxa whose status may have changed markedly. This notice provides the specific explanation for the reclassification of this species.

It is important to note that candidate assessment is an ongoing function and changes in status should be expected. We may restore species to candidate status that are removed from the candidate list if additional information supporting such a change becomes available. We most recently requested such information in the plant and animal candidate notice of review published in the **Federal Register** on September 19, 1997 (62 FR 49398).

Finding

Lesquerella stonensis Rollins (Stones River bladderpod), a small winter annual plant, occurs in three populations found in the floodplain of the Stones River, Rutherford County, Tennessee. The three populations are divided among 20 sites located on U.S. Army Corps of Engineers' (COE) lands, Tennessee Department of Environment and Conservation's (TDEC) lands, and privately owned lands. Over half of the known populations are on lands managed by the COE and the TDEC. This species requires annual disturbance in order to complete its life cycle. Historically, natural events such as flooding maintained its habitat by removing perennial grasses and woody plants that quickly invade the floodplain without regular natural or artificial disturbance. Annual crop production is currently the primary means of artificially maintaining *L. stonensis'* habitat, provided there is no fall planting and herbicide use is limited.

The Smithsonian Institution's January 9, 1975, report to Congress on those plants considered to be endangered, threatened, or extinct (House Document No. 94–51) included *Lesquerella stonensis*. We first designated *Lesquerella stonensis* as a candidate species in the December 15, 1980, Notice of Review (45 FR 82480). In designating this species a candidate, we considered the encroachment of more competitive vegetation and the loss of habitat through conversion of land to uses other than cultivation of annual crops as the primary threats to the species. In 1994, we entered into cooperative agreements with TDEC and the Tennessee Wildlife Resources Agency (TWRA) to determine the management regimes needed to protect and to maintain healthy, viable populations of *Lesquerella stonensis*. This information provided the basis for the 1998 Cooperative Management Agreement (CMA) among the Service, TWRA, TDEC, and COE for the conservation of *L. stonensis*. Under the CMA, appropriate agricultural management techniques will provide the disturbance required for the species. We believe that the CMA secures into the foreseeable future the 14 sites where the species occurs on public conservation lands. These populations are distributed over the historic range of the species. The TDEC will continue to work with the owners of the six privately owned sites to gain appropriate management for these sites and to obtain long-term protection for them. We conclude that habitat loss and modification are not likely to cause *L. stonensis* to become endangered or to be in danger of extinction in the foreseeable future over all or a significant portion of its range; therefore, neither the issuance of a proposed rule nor continuation of candidate status for this species is warranted.

Author

Staff biologists in our regional and field offices prepared the evaluation summarized in this document by Scott Hicks, Division of Endangered Species (see **ADDRESSES** section).

Authority

The authority for this action is the Endangered Species Act of 1973, as amended, 16 U.S.C. 1531 *et seq.*

Dated: April 14, 1999.

Jamie Rappaport Clark,

Director, Fish and Wildlife Service.

[FR Doc. 99–11746 Filed 5–10–99; 8:45 am]

BILLING CODE 4310–55–P

DEPARTMENT OF COMMERCE

National Oceanic and Atmospheric Administration

50 CFR Part 679

[Docket No. 990304063–9063–01; I.D. 050599B]

Fisheries of the Exclusive Economic Zone Off Alaska; Pacific Cod by Catcher Processors using Trawl Gear in the Bering Sea and Aleutian Islands

AGENCY: National Marine Fisheries Service (NMFS), National Oceanic and Atmospheric Administration (NOAA), Commerce.

ACTION: Closure.

SUMMARY: NMFS is closing directed fishing for Pacific cod by catcher processors using trawl gear in the Bering Sea and Aleutian Islands management area (BSAI). This action is necessary to prevent exceeding the portion of the

1999 total allowable catch (TAC) of Pacific cod allocated to catcher processors using trawl gear in this area.

DATES: Effective 1200 hrs, Alaska local time (A.l.t.), May 6, 1999, until 2400 hrs, A.l.t., December 31, 1999.

FOR FURTHER INFORMATION CONTACT: Andrew Smoker, 907–586-7228.

SUPPLEMENTARY INFORMATION: NMFS manages the groundfish fishery in the BSAI according to the Fishery Management Plan for the Groundfish Fishery of the Bering Sea and Aleutian Islands Area (FMP) prepared by the North Pacific Fishery Management Council under authority of the Magnuson-Stevens Fishery Conservation and Management Act. Regulations governing fishing by U.S. vessels in accordance with the FMP appear at subpart H of 50 CFR part 600 and 50 CFR part 679.

The Final 1999 Harvest Specifications of Groundfish for the BSAI (64 FR 12103, March 11, 1999) established the portion of the TAC of Pacific cod allocated to catcher processors using trawl gear in the BSAI as 38,475 metric tons (mt) in accordance with § 679.20(c)(3)(iii) and § 679.20(a)(7)(i)(B).

In accordance with § 679.20(d)(1)(i), the Administrator, Alaska Region, NMFS (Regional Administrator), has determined that the portion of the TAC of Pacific cod allocated to catcher processors using trawl gear in the BSAI will be reached. The Regional Administrator is establishing a directed fishing allowance of 14,000 mt, and is setting aside the remaining 24,475 mt as bycatch to support other anticipated groundfish fisheries. In accordance with § 679.20(d)(1)(iii), the Regional Administrator finds that this directed fishing allowance will soon be reached. Consequently, NMFS is closing directed fishing for Pacific cod by catcher processors using trawl gear in the BSAI.

Maximum retainable bycatch amounts may be found in the regulations at § 679.20(e) and (f).

Classification

This action responds to the best available information recently obtained from the fishery. It must be implemented immediately in order to prevent overharvesting the 1999 TAC of Pacific cod allocated to catcher processors using trawl gear in the BSAI. A delay in the effective date is impracticable and contrary to the public interest. The Pacific cod directed fishing allowance established for catcher processors will soon be reached. Further delay would only result in overharvest, which would disrupt the FMP's objective of providing sufficient Pacific cod to support bycatch needs in other anticipated groundfish fisheries throughout the year. NMFS finds for good cause that the implementation of this action can not be delayed for 30 days. Accordingly, under 5 U.S.C. 553(d), a delay in the effective date is hereby waived.

This action is required by § 679.20 and is exempt from review under E.O. 12866.

Authority: 16 U.S.C. 1801 *et seq.*

Dated: May 6, 1999.

Bruce Morehead,

Acting Director, Office of Sustainable Fisheries, National Marine Fisheries Service.

[FR Doc. 99–11820 Filed 5–6–99; 2:20 pm]

BILLING CODE 3510–22–F

Proposed Rules

Federal Register
Vol. 64, No. 90
Tuesday, May 11, 1999

This section of the FEDERAL REGISTER contains notices to the public of the proposed issuance of rules and regulations. The purpose of these notices is to give interested persons an opportunity to participate in the rule making prior to the adoption of the final rules.

DEPARTMENT OF TRANSPORTATION

Federal Aviation Administration

14 CFR Part 39

[Docket No. 99–CE–15–AD]

RIN 2120–AA64

Airworthiness Directives; Fairchild Aircraft, Inc. Models SA226–T, SA226–T(B), SA226–AT, and SA226–TC Airplanes

AGENCY: Federal Aviation Administration, DOT.

ACTION: Notice of proposed rulemaking (NPRM).

SUMMARY: This document proposes to supersede Airworthiness Directive (AD) 77–25–03, which currently requires repetitively inspecting the landing gear actuator rod ends that are equipped with grease fittings for cracks on Fairchild Aircraft, Inc. (Fairchild Aircraft) Models SA226–T, SA226–AT, and SA226–TC airplanes. AD 77–25–03 also requires replacing the landing gear actuator rod ends with an improved part either immediately or at a certain time period depending on the results of the inspections. Replacement of all six rod ends terminates the repetitive inspection requirements of AD 77–25–03. The AD proposed in this document is the result of failures of the landing gear rod ends on airplanes where the rod ends were replaced in accordance with AD 77–25–03. Fairchild has re-designed the landing gear rod ends as a result of these failures. The proposed AD would require replacing all landing gear rod ends with these improved design parts on all SA226 series airplanes, including those manufactured since AD 77–25–03 was issued (i.e., the Model SA226–T(B) airplanes). The actions specified by the proposed AD are intended to prevent failure of the landing gear actuator caused by cracks in the rod ends, which could result in the inability to lower the landing gear during a landing with consequent possible loss of control of the airplane.

DATES: Comments must be received on or before July 16, 1999.

ADDRESSES: Submit comments in triplicate to the Federal Aviation Administration (FAA), Central Region, Office of the Regional Counsel, Attention: Rules Docket No. 99–CE–15–AD, Room 1558, 601 E. 12th Street, Kansas City, Missouri 64106. Comments may be inspected at this location between 8 a.m. and 4 p.m., Monday through Friday, holidays excepted.

Service information that applies to the proposed AD may be obtained from Fairchild Aircraft, Inc., P.O. Box 790490, San Antonio, Texas 78279–0490; telephone: (210) 824–9421; facsimile: (210) 820–8609. This information also may be examined at the Rules Docket at the address above.

FOR FURTHER INFORMATION CONTACT: Hung Viet Nguyen, FAA, Airplane Certification Office, 2601 Meacham Boulevard, Fort Worth, Texas 76193–0150; telephone: (817) 222–5133; facsimile: (817) 222–5960.

SUPPLEMENTARY INFORMATION:

Comments Invited

Interested persons are invited to participate in the making of the proposed rule by submitting such written data, views, or arguments as they may desire. Communications should identify the Rules Docket number and be submitted in triplicate to the address specified above. All communications received on or before the closing date for comments, specified above, will be considered before taking action on the proposed rule. The proposals contained in this notice may be changed in light of the comments received.

Comments are specifically invited on the overall regulatory, economic, environmental, and energy aspects of the proposed rule. All comments submitted will be available, both before and after the closing date for comments, in the Rules Docket for examination by interested persons. A report that summarizes each FAA-public contact concerned with the substance of this proposal will be filed in the Rules Docket.

Commenters wishing the FAA to acknowledge receipt of their comments submitted in response to this notice must submit a self-addressed, stamped postcard on which the following statement is made: ‘‘Comments to Docket No. 99–CE–15–AD.’’ The postcard will be date stamped and returned to the commenter.

Availability of NPRMs

Any person may obtain a copy of this NPRM by submitting a request to the FAA, Central Region, Office of the Regional Counsel, Attention: Rules Docket No. 99–CE–15–AD, Room 1558, 601 E. 12th Street, Kansas City, Missouri 64106.

Discussion

AD 77–25–03, Amendment 39–3090, currently requires repetitively inspecting the landing gear actuator rod ends that are equipped with grease fittings for cracks on Fairchild Aircraft, Inc. (Fairchild Aircraft) Models SA226–T, SA226–AT, and SA226–TC airplanes. AD 77–25–03 also requires replacing the landing gear actuator rod ends with improved design parts either immediately or at a certain time period depending on the results of the inspections. Replacement of all six rod ends terminates the repetitive inspection requirement of AD 77–25–03.

Accomplishment of the actions of AD 77–25–03 is required in accordance with Swearingen Aviation Corporation Service Bulletin A32–014, dated November 17, 1977.

Actions Since Issuance of Previous Rule

The FAA has received reports of failures of the landing gear rod ends on airplanes where the rod ends were replaced in accordance with AD 77–25–03. The flight time accumulated on the landing gear actuators varies between the failures; however, the reports show that these parts are not meeting their life limits. Fairchild has re-designed the landing gear rod ends, part number (P/N) VTA00350, as a result of these failures.

Cracks in the landing gear actuator rod ends, if not detected and corrected in a timely manner, could result in failure of the landing gear actuator and the inability to lower the landing gear during a landing with consequent possible loss of control of the airplane.

Relevant Service Information

Fairchild has issued Service Bulletin SB A32–014, Revised: January 26, 1999, which specifies procedures for replacing the existing landing gear actuator rod ends with ones of improved design, P/N VTA00350.

The FAA's Determination

After examining the circumstances and reviewing all available information related to the incidents described above, the FAA has determined that AD action should be taken to prevent the above-referenced condition from occurring on all SA226 series airplanes, including those manufactured since AD 77–25–03 was issued (i.e., the Model SA226–T(B) airplanes).

Explanation of the Provisions of the Proposed AD

Since an unsafe condition has been identified that is likely to exist or develop in other Fairchild Models SA226–T, SA226–T(B), SA226–AT, and SA226–TC airplanes of the same type design that are equipped with any landing gear actuator rod end other than P/N VTA00350 (or FAA-approved equivalent part number), the FAA is proposing AD action. The proposed AD would supersede AD 77–25–03, and would require replacing all landing gear rod ends with these improved design parts, P/N VTA00350 (or FAA-approved equivalent part number).

Accomplishment of the proposed replacements would be required in accordance with Fairchild Aircraft Service Bulletin SB A32–014, Revised: January 26, 1999.

Cost Impact

The FAA estimates that 190 airplanes in the U.S. registry would be affected by the proposed AD, that it would take approximately 6 workhours per airplane to accomplish the proposed replacements, and that the average labor rate is approximately $60 an hour. Parts cost approximately $169 per rod (6 rods per airplane). Based on these figures, the total cost impact of the proposed AD on U.S. operators is estimated to be $261,060, or $1,374 per airplane.

This figure is based upon the presumption that no affected airplane owner/operator has accomplished the proposed replacement.

Regulatory Impact

The regulations proposed herein would not have substantial direct effects on the States, on the relationship between the national government and the States, or on the distribution of power and responsibilities among the various levels of government. Therefore, in accordance with Executive Order 12612, it is determined that this proposal would not have sufficient federalism implications to warrant the preparation of a Federalism Assessment.

For the reasons discussed above, I certify that this action (1) is not a ''significant regulatory action'' under Executive Order 12866; (2) is not a ''significant rule'' under DOT Regulatory Policies and Procedures (44 FR 11034, February 26, 1979); and (3) if promulgated, will not have a significant economic impact, positive or negative, on a substantial number of small entities under the criteria of the Regulatory Flexibility Act. A copy of the draft regulatory evaluation prepared for this action has been placed in the Rules Docket. A copy of it may be obtained by contacting the Rules Docket at the location provided under the caption **ADDRESSES**.

List of Subjects in 14 CFR Part 39

Air transportation, Aircraft, Aviation safety, Safety.

The Proposed Amendment

Accordingly, pursuant to the authority delegated to me by the Administrator, the Federal Aviation Administration proposes to amend 14 CFR part 39 of the Federal Aviation Regulations as follows:

PART 39—AIRWORTHINESS DIRECTIVES

1. The authority citation for part 39 continues to read as follows:

Authority: 49 U.S.C. 106(g), 40113, 44701.

§ 39.13 [Amended]

2. Section 39.13 is amended by removing Airworthiness Directive (AD) 77–25–03, Amendment 39–3090, and by adding a new AD to read as follows:

Fairchild Aircraft, Inc.: Docket No. 99–CE–15–AD; Supersedes AD 77–25–03, Amendment 39–3090.

Applicability: The following airplanes models and serial numbers, certificated in any category; that are equipped with any landing gear actuator rod end other than part number (P/N) VTA00350 (or FAA-approved equivalent part number).

Model	Serial No.
SA226–T	T201 through T275 and T277 through T291.
SA226–T(B)	T(B) 276 and T(B) 292 through T(B)417.
SA226–AT ...	AT001 through AT074.
SA226–TC ...	TC201 through TC396, TC398 through TC413, and TC418 through TC419.

Note 1: This AD applies to each airplane identified in the preceding applicability provision, regardless of whether it has been modified, altered, or repaired in the area subject to the requirements of this AD. For airplanes that have been modified, altered, or repaired so that the performance of the requirements of this AD is affected, the owner/operator must request approval for an alternative method of compliance in accordance with paragraph (d) of this AD. The request should include an assessment of the effect of the modification, alteration, or repair on the unsafe condition addressed by this AD; and, if the unsafe condition has not been eliminated, the request should include specific proposed actions to address it.

Compliance: Required as indicated in the body of this AD, unless already accomplished.

To prevent failure of the landing gear actuator caused by cracks in the rod ends, which could result in the inability to lower the landing gear during a landing with consequent possible loss of control of the airplane, accomplish the following:

(a) Within the next 500 hours time-in-service (TIS) after the effective date of this AD, replace any landing gear actuator rod end that is not P/N VTA00350 (or FAA-approved equivalent part number) with one that incorporates this part number. Accomplish this replacement in accordance with Fairchild Aircraft Service Bulletin SB A32–014, Revised: January 26, 1999.

(b) As of the effective date of this AD, no person may install, on any affected airplane, any landing gear actuator rod end that is other than P/N VTA00350 (or FAA-approved equivalent part number).

(c) Special flight permits may be issued in accordance with sections 21.197 and 21.199 of the Federal Aviation Regulations (14 CFR 21.197 and 21.199) to operate the airplane to a location where the requirements of this AD can be accomplished.

(d) An alternative method of compliance or adjustment of the compliance time that provides an equivalent level of safety may be approved by the Manager, FAA, Airplane Certification Office (ACO), 2601 Meacham Boulevard, Fort Worth, Texas 76193–0150.

(1) The request shall be forwarded through an appropriate FAA Maintenance Inspector, who may add comments and then send it to the Manager, Fort Worth ACO.

(2) Alternative methods of compliance approved in accordance with AD 77–25–03 are not considered approved as alternative methods of compliance for this AD.

Note 2: Information concerning the existence of approved alternative methods of compliance with this AD, if any, may be obtained from the Fort Worth ACO.

(e) All persons affected by this directive may obtain copies of the document referred to herein upon request to Fairchild Aircraft, Inc., P.O. Box 790490, San Antonio, Texas 78279–0490; or may examine this document at the FAA, Central Region, Office of the Regional Counsel, Room 1558, 601 E. 12th Street, Kansas City, Missouri 64106.

(f) This amendment supersedes AD 77–25–03, Amendment 39–3090.

Issued in Kansas City, Missouri, on May 4, 1999.

Michael Gallagher,

Manager, Small Airplane Directorate, Aircraft Certification Service.

[FR Doc. 99–11779 Filed 5–10–99; 8:45 am]

BILLING CODE 4910–13–P

DEPARTMENT OF TRANSPORTATION

Federal Aviation Administration

14 CFR Part 71

[Airspace Docket No. 99–AGL–29]

Proposed Modification of Class E Airspace; La Crosse, WI

AGENCY: Federal Aviation Administration (FAA), DOT.

ACTION: Notice of proposed rulemaking.

SUMMARY: This notice proposes to modify Class E airspace at La Crosse, WI. A Global Positioning System (GPS) Standard Instrument Approach Procedure (SIAP), 330° helicopter point in space approach, has been developed for Saint Francis Medical Center. Controlled airspace extending upward from 700 to 1200 feet above ground level (AGL) is needed to contain aircraft executing the approach. This action proposes to modify the existing controlled airspace for La Crosse, WI, to the southeast in order to include the point in space approach serving Saint Francis Medical Center.

DATES: Comments must be received on or before June 30, 1999.

ADDRESSES: Send comments on the proposal in triplicate to: Federal Aviation Administration, Office of the Assistant Chief Counsel, AGL–7, Rules Docket No. 99–AGL–29, 2300 East Devon Avenue, Des Plaines, Illinois 60018.

The official docket may be examined in the Office of the Assistant Chief Counsel, Federal Aviation Administration, 2300 East Devon Avenue, Des Plaines, Illinois. An informal docket may also be examined during normal business hours at the Air Traffic Division, Airspace Branch, Federal Aviation Administration, 2300 East Devon Avenue, Des Plaines, Illinois.

FOR FURTHER INFORMATION CONTACT: Michelle M. Behm, Air Traffic Division, Airspace Branch, AGL–520, Federal Aviation Administration, 2300 East Devon Avenue, Des Plaines, Illinois 60018, telephone (847) 294–7568.

SUPPLEMENTARY INFORMATION:

Comments Invited

Interested parties are invited to participate in this proposed rulemaking by submitting such written data, views, or arguments as they may desire. Comments that provide the factual basis supporting the views and suggestions presented are particularly helpful in developing reasoned regulatory decisions on the proposal. Comments are specifically invited on the overall regulatory, aeronautical, economic, environmental, and energy-related aspects of the proposal. Communications should identify the airspace docket number and be submitted in triplicate to the address listed above. Commenters wishing the FAA to acknowledge receipt of their comments on this notice must submit with those comments a self-addressed, stamped postcard on which the following statement is made: ''Comments to Airspace Docket No. 99–AGL–29.'' The postcard will be date/time stamped and returned to the commenter. All communications received on or before the specified closing date for comments will be considered before taking action on the proposed rule. The proposal contained in this notice may be changed in light of comments received. All comments submitted will be available for examination in the Rules Docket, FAA, Great Lakes Region, Office of the Assistant Chief Counsel, 2300 East Devon Avenue, Des Plaines, Illinois, both before and after the closing date for comments. A report summarizing each substantive public contact with FAA personnel concerned with this rulemaking will be filed in the docket.

Availability of NPRM's

Any person may obtain a copy of this Notice of Proposed Rulemaking (NPRM) by submitting a request to the Federal Aviation Administration, Office of Public Affairs, Attention: Public Inquiry Center, APA–230, 800 Independence Avenue, S.W., Washington, DC 20591, or by calling (202) 267–3484. Communications must identify the notice number of this NPRM. Persons interested in being placed on a mailing list for future NPRM's should also request a copy of Advisory Circular No. 11–2A, which describes the application procedure.

The Proposal

The FAA is considering an amendment to 14 CFR part 71 to modify Class E airspace at La Crosse, WI, to accommodate aircraft executing the proposed GPS SIAP 330° helicopter point in space approach for Saint Francis Medical Center by modifying existing controlled airspace. Controlled airspace extending upward from 700 to 1200 feet AGL is needed to contain aircraft executing the approach. The area would be depicted on appropriate aeronautical charts. Class E airspace designations for airspace areas extending upward from 700 feet or more above the surface of the earth are published in paragraph 6005 of FAA Order 7400.9F dated September 10, 1998, and effective September 16, 1998, which is incorporated by reference in 14 CFR 71.1. The Class E airspace designation listed in this document would be published subsequently in the Order.

The FAA has determined that this proposed regulation only involves an established body of technical regulations for which frequent and routine amendments are necessary to keep them operationally current. Therefore this, proposed regulation—(1) is not a ''significant regulatory action'' under Executive Order 12866; (2) is not a ''significant rule'' under DOT Regulatory Policies and Procedures (44 FR 11034; February 26, 1979); and (3) does not warrant preparation of a Regulatory Evaluation as the anticipated impact is so minimal. Since this is a routine matter that will only affect air traffic procedures and air navigation, it is certified that this proposed rule will not have a significant economic impact on a substantial number of small entities under the criteria of the Regulatory Flexibility Act.

List of Subjects in 14 CFR Part 71

Airspace, Incorporation by reference, Navigation (air).

The Proposed Amendment

Accordingly, pursuant to the authority delegated to me, the Federal Aviation Administration proposes to amend 14 CFR part 71 as follows:

PART 71—DESIGNATION OF CLASS A, CLASS B, CLASS C, CLASS D, AND CLASS E AIRSPACE AREAS; AIRWAYS; ROUTES; AND REPORTING POINTS

1. The authority citation for part 71 continues to read as follows:

Authority: 49 U.S.C. 106(g), 40103, 40113, 40120; E.O. 10854, 24 FR 9565, 3 CFR, 1959–1963 Comp., p. 389.

§ 71.1 [Amended]

2. The incorporation by reference in 14 CFR 71.1 of the Federal Aviation Administration Order 7400.9F, Airspace Designations and Reporting Points, dated September 10, 1998, and effective September 16, 1998, is amended as follows:

Paragraph 6005 Class E airspace areas extending upward from 700 feet or more above the surface of the earth.

* * * * *

AGL WI E5 La Crosse, WI [Revised]

La Crosse Municipal Airport, WI
(Lat. 43° 52′ 46″N., long. 091° 15′ 24″W.)
La Crosse VOR/DME

(Lat. 43° 52′ 34″N., long. 091° 15′ 22″W.)
Saint Francis Medical Center, WI
Point In Space Coordinates
(Lat. 43° 47′ 39″N., long. 091° 14′ 00″W.)

That airspace extending upward from 700 feet above the surface within a 6.9-mile radius of La Crosse Municipal Airport and within 3.2 miles each side of the La Crosse VOR/DME 187° radial extending from the 6.9-mile radius to 12.3 miles south of the airport, and within a 6.0-mile radius of the point in space serving Saint Francis Medical Center.

* * * * *

Issued in Des Plaines, Illinois on April 26, 1999.

Chrstopher R. Blum,

Manager, Air Traffic Division.

[FR Doc. 99–11871 Filed 5–10–99; 8:45 am]

BILLING CODE 4910–13–M

DEPARTMENT OF TRANSPORTATION

Federal Aviation Administration

14 CFR Part 71

[Airspace Docket No. 99–AGL–30]

Proposed Modification of Class E Airspace; Mankato, MN

AGENCY: Federal Aviation Administration (FAA), DOT.

ACTION: Notice of proposed rulemaking.

SUMMARY: This notice proposes to modify Class E airspace at Mankato, MN. A Global Positioning System (GPS) Standard Instrument Approach Procedure (SIAP), 270° helicopter point in space approach, has been developed for Immanuel-St. Joseph's Hospital. Controlled airspace extending upward from 700 to 1200 feet above ground level (AGL) is needed to contain aircraft executing the approach. This action proposes to modify the existing controlled airspace for Mankato, MN, to the southwest in order to include the point in space approach serving Immanuel-St. Joseph's Hospital.

DATES: Comments must be received on or before June 30, 1999.

ADDRESSES: Send comments on the proposal in triplicate to: Federal Aviation Administration, Office of the Assistant Chief Counsel, AGL–7, Rules Docket No. 99–AGL–30, 2300 East Devon Avenue, Des Plaines, Illinois 60018.

The official docket may be examined in the Office of the Assistant Chief Counsel, Federal Aviation Administration, 2300 East Devon Avenue, Des Plaines, Illinois. An informal docket may also be examined during normal business hours at the Air Traffic Division, Airspace Branch, Federal Aviation Administration, 2300 East Devon Avenue, Des Plaines, Illinois.

FOR FURTHER INFORMATION CONTACT: Michelle M. Behm, Air Traffic Division, Airspace Branch, AGL–520, Federal Aviation Administration, 2300 East Devon Avenue, Des Plaines, Illinois 60018 telephone (847) 294–7568.

SUPPLEMENTARY INFORMATION:

Comments Invited

Interested parties are invited to participate in this proposed rulemaking by submitting such written data, views, or arguments as they may desire. Comments that provide the factual basis supporting the views and suggestions presented are particularly helpful in developing reasoned regulatory decisions on the proposal. Comments are specifically invited on the overall regulatory, aeronautical, economic, environmental, and energy-related aspects of the proposal. Communications should identify the airspace docket number and be submitted in triplicate to the address listed above. Commenters wishing the FAA to acknowledge receipt of their comments on this notice must submit with those comments a self-addressed, stamped postcard on which the following statement is made: ''Comments to Airspace Docket No. 99–AGL–30.'' The postcard will be date/time stamped and returned to the commenter. All communications received on or before the specified closing date for comments will be considered before taking action on the proposed rule. The proposal contained in this notice may be changed in light of comments received. All comments submitted will be available for examination in the Rules Docket, FAA, Great Lakes Region, Office of the Assistant Chief Counsel, 2300 East Devon Avenue, Des Plaines, Illinois, both before and after the closing date for comments. A report summarizing each substantive public contact with FAA personnel concerned with this rulemaking will be filed in the docket.

Availability of NPRM's

Any person may obtain a copy of this Notice of Proposed Rulemaking (NPRM) by submitting a request to the Federal Aviation Administration, Office of Public Affairs, Attention: Public Inquiry Center, APA–230, 800 Independence Avenue, SW, Washington, DC 20591, or by calling (202) 267–3484. Communications must identify the notice number of this NPRM. Persons interested in being placed on a mailing list for future NPRM's should also request a copy of Advisory Circular No. 11–2A, which describes the application procedure.

The Proposal

The FAA is considering an amendment to 14 CFR part 71 to modify Class E airspace at Mankato, MN, to accommodate aircraft executing the proposed GPS SIAP 270° helicopter point in space approach for Immanuel-St. Joseph's Hospital by modifying existing controlled airspace. Controlled airspace extending upward from 700 to 1200 feet AGL is needed to contain aircraft executing the approach. The area would be depicted on appropriate aeronautical charts. Class E airspace designations for airspace areas extending upward from 700 feet or more above the surface of the earth are published in paragraph 6005 of FAA Order 7400.9F dated September 10, 1998, and effective September 16, 1998, which is incorporated by reference in 14 CFR 71.1. The Class E airspace designation listed in this document would be published subsequently in the Order.

The FAA has determined that this proposed regulation only involves an established body of technical regulations for which frequent and routine amendments are necessary to keep them operationally current. Therefore, this proposed regulation—(1) is not a ''significant regulatory action'' under Executive Order 12866; (2) is not a ''significant rule'' under DOT Regulatory Policies and Procedures (44 FR 11034; February 26, 1979); and (3) does not warrant preparation of a Regulatory Evaluation as the anticipated impact is so minimal. Since this is a routine matter that will only affect air traffic procedures and air navigation, it is certified that this proposed rule will not have a significant economic impact on a substantial number of small entities under the criteria of the Regulatory Flexibility Act.

List of Subjects in 14 CFR Part 71

Airspace, Incorporation by reference, Navigation (air).

The Proposed Amendment

Accordingly, pursuant to the authority delegated to me, the Federal Aviation Administration proposes to amend 14 CFR part 71 as follows:

PART 71—DESIGNATION OF CLASS A, CLASS B, CLASS C, CLASS D, AND CLASS E AIRSPACE AREAS; AIRWAYS; ROUTES; AND REPORTING POINTS

1. The authority citation for part 71 continues to read as follows:

Authority: 49 U.S.C. 106(g), 40103, 40113, 40120; E.O. 10854, 24 FR 9565, 3 CFR, 1959–1963 Comp., p. 389.

§ 71.1 [Amended]

2. The incorporation by reference in 14 CFR 71.1 of the Federal Aviation Administration Order 7400.9F, Airspace Designations and Reporting Points, dated September 10, 1998, and effective September 16, 1998, is amended as follows:

Paragraph 6005 Class E airspace areas extending upward from 700 feet or more above the surface of the earth.

* * * * *

AGL MN E5 Mankato, MN [Revised]

Mankato Municipal Airport, MN
(Lat. 44° 13′ 18″N., long. 093° 55′ 07″W.)
Immanuel-St. Joseph's Hospital, MN
Point In Space Coordinates
(Lat. 44° 09′ 48″N., long. 093° 57′ 40″W.)

That airspace extending upward from 700 feet above the surface within a 7.0-mile radius of Mankato Municipal Airport and within 2.0 miles each side of the 047° bearing from the airport extending from the 7.0-mile radius to 8.0 miles northeast of the airport, and within a 6.0-mile radius of the point in space serving Immanuel-St. Joseph's Hospital.

* * * * *

Issued in Des Plaines, Illinois on April 26, 1999.

Christopher R. Blum;

Manager, Air Traffic Division.

[FR Doc. 99–11870 Filed 5–10–99; 8:45 am]

BILLING CODE 4910–13–M

DEPARTMENT OF TRANSPORTATION

Federal Aviation Administration

14 CFR Part 71

[Airspace Docket No. 99–AGL–28]

Proposed Modification of Class E Airspace; Eau Claire, WI

AGENCY: Federal Aviation Administration (FAA), DOT.

ACTION: Notice of proposed rulemaking.

SUMMARY: This notice proposes to modify Class E airspace at Eau Claire, WI. A Global Positioning System (GPS) Standard Instrument Approach Procedure (SIAP), 065° helicopter point in space approach, has been developed for Luther Hospital. Controlled airspace extending upward from 700 to 1200 feet above ground level (AGL) is needed to contain aircraft executing the approach. This action proposes to modify the existing controlled airspace for Eau Claire, WI, to the southwest in order to include the point in space approach serving Luther Hospital.

DATES: Comments must be received on or before June 30, 1999.

ADDRESSES: Send comments on the proposal in triplicate to: Federal Aviation Administration, Office of the Assistant Chief Counsel, AGL–7, Rules Docket No. 99–AGL–28, 2300 East Devon Avenue, Des Plaines, Illinois 60018.

The official docket may be examined in the Office of the Assistant Chief Counsel, Federal Aviation Administration, 2300 East Devon Avenue, Des Plaines, Illinois. An informal docket may also be examined during normal business hours at the Air Traffic Division, Airspace Branch, Federal Aviation Administration, 2300 East Devon Avenue, Des Plaines, Illinois.

FOR FURTHER INFORMATION CONTACT: Michelle M. Behm, Air Traffic Division, Airspace Branch, AGL–520, Federal Aviation Administration, 2300 East Devon Avenue, Des Plaines, Illinois 60018, telephone (847) 294–7568.

SUPPLEMENTARY INFORMATION:

Comments Invited

Interested parties are invited to participate in this proposed rulemaking by submitting such written data, views, or arguments as they may desire. Comments that provide the factual basis supporting the views and suggestions presented are particularly helpful in developing reasoned regulatory decisions on the proposal. Comments are specifically invited on the overall regulatory, aeronautical, economic, environmental, and energy-related aspects of the proposal. Communications should identify the airspace docket number and be submitted in triplicate to the address listed above. Commenters wishing the FAA to acknowledge receipt of their comments on this notice must submit with those comments a self-addressed, stamped postcard on which the following statement is made: ''Comments to Airspace Docket No. 99–AGL–28.'' The postcard will be date/time stamped and returned to the commenter. All communications received on or before the specified closing date for comments will be considered before taking action on the proposed rule. The proposal contained in this notice may be changed in light of comments received. All comments submitted will be available for examination in the Rules Docket, FAA, Great Lakes Region, Office of the Assistant Chief Counsel, 2300 East Devon Avenue, Des Plaines, Illinois, both before and after the closing date for comments. A report summarizing each substantive public contact with FAA personnel concerned with this rulemaking will be filed in the docket.

Availability of NPRM's

Any person may obtain a copy of this Notice of Proposed Rulemaking (NPRM) by submitting a request to the Federal Aviation Administration, Office of Public Affairs, Attention: Public Inquiry Center, APA–230, 800 Independence Avenue, SW, Washington, DC 20591, or by calling (202) 267–3484. Communications must identify the notice of this NPRM. Persons interested in being placed on a mailing list for future NPRM's should also request a copy of Advisory Circular No. 11–2A, which describes the application procedure.

The Proposal

The FAA is considering an amendment to the 14 CFR part 71 to modify Class E airspace at Eau Claire, WI, to accommodate aircraft executing the proposed GPS SIAP 065° helicopter point in space approach for Luther Hospital by modifying existing controlled airspace. Controlled airspace extending upward from 700 to 1200 feet AGL is needed to contain aircraft executing the approach. The area would be depicted on appropriate aeronautical charts. Class E airspace designations for airspace areas extending upward from 700 feet or more above the surface of the earth are published in paragraph 6005 of FAA Order 7400.9F dated September 10, 1998, and effective September 16, 1998, which is incorporated by reference in 14 CFR 71.1. The Class E airspace designation listed in this document would be published subsequently in the Order.

The FAA has determined that this proposed regulation only involves an established body of technical regulations for which frequent and routine amendments are necessary to keep them operationally current. Therefore this, proposed regulation—(1) is not a ''significant regulatory action'' under Executive Order 12866; (2) is not a ''significant rule'' under DOT Regulatory Policies and Procedures (44 FR 11034; February 26, 1979); and (3) does not warrant preparation of a Regulatory Evaluation as the anticipated impact is so minimal. Since this is a routine matter that will only affect air traffic procedures and air navigation, it is certified that this proposed rule will not have a significant economic impact on a substantial number of small entities under the criteria of the Regulatory Flexibility Act.

List of Subjects in 14 CFR Part 71

Airspace, Incorporation by reference, Navigation (air).

The Proposed Amendment

Accordingly, pursuant to the authority delegated to me, the Federal Aviation Administration proposes to amend 14 CFR part 71 as follows:

PART 71—DESIGNATION OF CLASS A, CLASS B, CLASS C, CLASS D, AND CLASS E AIRSPACE AREAS; AIRWAYS; ROUTES; AND REPORTING POINTS

1. The authority citation for part 71 continues to read as follows:

Authority: 49 U.S.C. 106(g), 40103, 40113, 40120; E.O. 10854, 24 FR 9565, 3 CFR, 1959–1963 Comp., p. 389.

§ 71.1 [Amended]

2. The incorporation by reference in 14 CFR 71.1 of the Federal Aviation Administration Order 7400.9F, Airspace Designations and Reporting Points, dated September 10, 1998, and effective September 16, 1998, is amended as follows:

Paragraph 6005 Class E airspace areas extending upward from 700 feet or more above the surface of the earth.

* * * * *

AGL WI E5 Eau Claire, WI [Revised]

Chippewa Valley Regional Airport, WI
(Lat. 44°51′55″ N., long. 091°29′06″ W.)
Eau Claire VORTAC
(Lat. 44°53′52″ N., long. 091°28′43″ W.)
Luther Hospital, WI
Point In Space Coordinates
(Lat. 44°48′24″ N., long. 091°31′51″ W.)

That airspace extending upward from 700 feet above the surface within a 6.7-mile radius of Chippewa Valley Regional Airport and within 1.9 miles each side of the southwest localizer course extending from the 6.7-mile radius to 13.2 miles southwest of the airport, and within 3.1 miles each side of the Eau Claire VORTAC 004° radial extending from the 6.7-mile radius to 9.6 miles north of the airport, and within a 6.0-mile radius of the point in space serving Luther Hospital.

* * * * *

Issued in Des Plaines, Illinois on April 26, 1999.

Christopher R. Blum,

Manager, Air Traffic Division.

[FR Doc. 99–11869 Filed 5–10–99; 8:45 am]

BILLING CODE 4910–13–M

DEPARTMENT OF THE TREASURY

Internal Revenue Service

26 CFR Part 1

[REG–120168–97]

RIN 1545–AW73

Preparer Due Diligence Requirements for Determining Earned Income Credit Eligibilty; Hearing Cancellation

AGENCY: Internal Revenue Service (IRS), Treasury.

ACTION: Cancellation of notice of public hearing on proposed rulemaking.

SUMMARY: This document provides notice of cancellation of a public hearing on proposed regulations relating to the due diligence requirements in determining eligibility for the earned income credit for paid preparers of federal income tax returns or claims for refund.

DATES: The public hearing originally scheduled for Thursday, May 20, 1999, at 10 a.m., is cancelled.

FOR FURTHER INFORMATION CONTACT: Michael L. Slaughter of the Regulations Unit, Assistant Chief Counsel (Corporate), (202) 622–7180 (not a toll-free number).

SUPPLEMENTARY INFORMATION: A notice of proposed rulemaking by cross-reference to temporary regulations, and notice of public hearing that appeared in the **Federal Register** on Monday, December 21, 1998 (63 FR 70357), announced that a public hearing was scheduled for Thursday, May 20, 1999, at 10 a.m., in room 2615, Internal Revenue Building, 1111 Constitution Avenue, NW., Washington, DC. The subject of the public hearing is proposed regulations under section 6695 of the Internal Revenue Code. The public comment period for these proposed regulations expired on Monday, March 22, 1999. The outlines of topics to be addressed at the hearing were due on Thursday, April 29, 1999.

The notice of proposed rulemaking and notice of public hearing, instructed those interested in testifying at the public hearing to submit a request to speak and an outline of the topics to be addressed. As of May, 5, 1999, no one has requested to speak. Therefore, the public hearing scheduled for Thursday, May 20, 1999, is cancelled.

Cynthia E. Grigsby,

Chief, Regulations Unit, Assistant Chief Counsel (Corporate).

[FR Doc. 99–11756 Filed 5–10–99; 8:45 am]

BILLING CODE 4830–01–P

DEPARTMENT OF COMMERCE

Patent and Trademark Office

37 CFR Parts 1, 2, 3 and 6

[Docket No. 990401084–9084–01]

RIN 0651–AB00

Trademark Law Treaty Implementation Act Changes

AGENCY: Patent and Trademark Office, Commerce.

ACTION: Notice of proposed rulemaking; Notice of hearing.

SUMMARY: The Patent and Trademark Office (Office) proposes to amend its rules to implement the Trademark Law Treaty Implementation Act of 1998 (TLTIA), Pub. L. No. 105–330, 112 Stat. 3064 (15 U.S.C. 1051), and to otherwise simplify and clarify procedures for registering trademarks, and for maintaining and renewing trademark registrations.

DATES: Comments must be received by June 25, 1999 to ensure consideration. A public hearing will be held at 10:00 a.m., June 10, 1999, in the South Tower Building, 1st floor, 2900 Crystal Drive, Arlington, Virginia 22202–3513. Submit requests to present oral testimony on or before June 3, 1999.

ADDRESSES: Mail comments to the Assistant Commissioner for Trademarks, 2900 Crystal Drive, Arlington, Virginia 22202–3513, attention Mary Hannon; fax comments to (703) 308–9395, attention Mary Hannon; or email comments to *tltia.comments@uspto.gov*. Copies of all comments will be available for public inspection in Suite 10B10, South Tower Building, 10th floor, 2900 Crystal Drive, Arlington, Virginia 22202–3513, from 8:30 a.m. until 5:00 p.m., Monday through Friday.

FOR FURTHER INFORMATION CONTACT: Mary Hannon, Office of Assistant Commissioner for Trademarks, (703) 308–8910, ext. 37.

SUPPLEMENTARY INFORMATION: TLTIA implements the Trademark Law Treaty (TLT). The purpose of TLT is to make the procedural requirements of the different national trademark offices more consistent.

TLTIA was enacted October 30, 1998. Title I of TLTIA, which contains the provisions that implement the treaty, will become effective October 30, 1999.

References below to ''the Act,'' ''the Trademark Act'' or ''the statute'' refer to the Trademark Act of 1946, as amended, 15 U.S.C. 1051 *et seq.* ''TMEP'' is the *Trademark Manual of Examining Procedure* (2nd ed., Rev. 1.1, August 1997).

Application Filing Dates

TLTIA § 103 adds §§ 1(a)(4) and 1(b)(4) of the Act to give the Office authority to establish and change filing date requirements. The Office proposes to eliminate several of the current minimum requirements necessary to receive a filing date. The goal is to make it easier for applicants to obtain filing dates, but also to ensure that the Office has enough information to begin examination, and to provide third parties who search Office records with accurate information about pending applications.

The Office proposes the following minimum filing requirements for granting a filing date: (1) the name of the applicant; (2) a name and address for correspondence; (3) a clear drawing of the mark; (4) a list of the goods or services; and (5) the filing fee for at least one class of goods or services.

Section 44(e) of the Act, as amended, no longer requires that a certified copy of the foreign registration accompany an application based on § 44(e). The Office proposes to require submission of the foreign certificate before the mark is published for opposition or approved for registration on the Supplemental Register.

The Office also proposes to eliminate the current filing date requirements for an allegation of the applicant's use or bona fide intention to use the mark in commerce; for a specimen, and date of first use in commerce in a § 1(a) application; and for a signature. These elements will be required before the mark is published for opposition or approved for registration on the Supplemental Register.

Bulky Specimens

Proposed § 2.56(d)(1) requires that specimens be flat and no larger than 8½ inches (21.6 cm.) wide by 11.69 inches (29.7 cm.) long. This is consistent with current § 2.56. The Office proposes to add § 2.56(d)(2), stating that if an applicant submits a specimen that exceeds the size requirement (a ''bulky specimen''), the Office will create a facsimile of the specimen that meets the requirements of the rule (i.e., is flat and no larger than 8½ inches (21.6 cm.) wide by 11.69 inches (29.7 cm.) long), insert it in the application file wrapper, and destroy the original bulky specimen.

Currently, when an applicant submits a specimen that does not conform to the requirements of § 2.56 (i.e., is not flat, exceeds the size limitation, etc.), the Office retains the specimen even though it is impossible to attach it to the application file wrapper. This requires substantial special handling because the Office must store and track the specimens separately from the application file wrappers. Because the number of newly filed applications has increased from approximately 83,000 to over 233,000 per year over the past ten years, and the number of pending applications has increased from less than 100,000 to over 350,000 in the same period, it has become increasingly difficult to ensure that the bulky specimens follow the application files. As the number of applications has increased, bulky materials submitted as specimens have also increased, requiring an increased use of limited resources to handle the bulky materials. Further, because specimens of this nature are often misplaced or lost during examination processing, the Office must then require new specimens, slowing examination and inconveniencing applicants.

Because the requirement for flat specimens can be easily satisfied through the use of photographs, photocopies, or other means of reproduction, the Office will no longer retain bulky materials submitted as specimens. In very limited circumstances, the Office will continue to accept specimens consisting of videotapes, audiotapes, CDs, computer diskettes, and similar materials where there are no non-bulky alternatives, and the submission is the only means available for showing use of the mark.

Number of Specimens Required

The Office proposes to amend §§ 2.56(a), 2.76(b)(2), 2.86(b), and 2.88(b)(2) to require one rather than three specimens with an application under § 1 of the Act, or an amendment to allege use or statement of use of a mark in an application under § 1(b) of the Act. The Office previously required three specimens so that an interested party, such as a potential opposer, could permanently remove a specimen from an application file, yet not leave the file without specimens. TMEP § 905.01. However, multiple copies of specimens are no longer necessary because the public may make photocopies of a single specimen.

Person Who May Sign Verified Statement

Currently, §§ 1(a)(1)(A) and 1(b)(1)(A) of the Act require that an application by a juristic applicant be signed ''by a member of the firm or an officer of the corporation or association applying.'' TLTIA § 103 amends §§ 1(a) and 1(b) of the Act to eliminate the specification of the appropriate person to sign on behalf of an applicant. The legislative history states:

> Under the existing provision, the Patent and Trademark Office has been limited to accepting, for example, only the signature of an officer of a corporation on an application when another corporate manager's signature would be appropriate because the corporate manager has specific knowledge of the facts asserted in the application. The unnecessary rigidity of the existing provision has worked a hardship on applicants who have been denied filing dates because the person verifying their application has not met the strict requirement of being an officer of the corporate applicant. Additionally, the Patent and Trademark Office has had difficulty applying the officer requirement to foreign juristic entities whose managers are not clearly officers under the United States corporate standards.

H.R. Rep. No. 194, 105th Cong., 1st Sess. 12 (1997).

Proposed §§ 2.33(a)(2), 2.76(b)(1), 2.88(b)(1), 2.89(a)(3), and 2.89(b)(3) require that a person properly authorized to sign on behalf of the applicant sign the verification. Proposed § 2.33(a)(2) states that a person who is properly authorized to sign on behalf of the applicant includes a person with legal authority to bind the applicant and/or a person with firsthand knowledge and actual or implied authority to act on behalf of the applicant.

The same principles apply to the verification of an affidavit or declaration of continued use or excusable nonuse under § 8 of the Act. Proposed § 2.161(b) requires that a person properly authorized to sign on behalf of the owner sign the verification. Proposed § 2.161(b)(2) states that a person who is properly authorized to sign on behalf of the owner includes a person with legal authority to bind the owner and/or a person with firsthand knowledge and actual or implied authority to act on behalf of the owner.

Filing by Owner

Although TLTIA amends the statute to eliminate the specification of the proper party to sign on behalf of an applicant or registrant, the statute still requires that the owner of the mark file an application for registration, amendment to allege use, statement of use, request for extension of time to file a statement of use, and § 8 affidavit. See sections 1(a)(1), 1(b)(1), 1(d)(1), 1(d)(2), and 8(b) of the Act.

TLTIA § 105 amends § 8 of the Act to require that the owner of the mark file an affidavit of continued use or excusable nonuse within the time period set forth in § 8(a) of the Act. The legislative history states:

Throughout the revised section 8, the term ''registrant'' has been replaced by the term ''owner.'' The practice at the Patent and Trademark Office has been to require that the current owner of the registration file all the post-registration affidavits needed to maintain a registration. The current owner of the registration must aver to actual knowledge of the use of the mark in the subject registration. However, the definition of ''registrant'' in section 45 of the Act states that the ''terms 'applicant' and 'registrant' embrace the legal representatives, predecessors, successors and assigns of each applicant and registrant.'' Therefore, use of the term ''registrant'' in section 8 of the Act would imply that any legal representative, predecessor, successor or assign of the registrant could successfully file the affidavits required by sections 8 and 9. To correct this situation, and to keep with the general principal [sic], as set out in section 1, that the owner is the proper person to prosecute an application, section 8 has been amended to state that the owner must file the affidavits required by the section.

H.R. Rep. No. 194, 105th Cong., 1st Sess. 18–19 (1997).

Therefore, the Office proposes to amend §§ 2.163(a) and 2.164(b) to make it clear that filing by the owner is a minimum requirement that cannot be cured after expiration of the filing period set forth in § 8 of the Act.

Sections 1(a) and 1(b) of the Act require that an application for registration of a mark be filed by the owner. Therefore, the Office also proposes to add new § 2.71(d), stating that although a mistake in setting out the applicant's name can be corrected, the application cannot be amended to set forth a different entity as the applicant; and that an application is void if it is filed in the name of an entity that did not own the mark as of the filing date of the application. This codifies current practice. TMEP § 802.07. *Huang* v. *Tzu Wei Chen Food Co. Ltd.*, 7 USPQ2d 1335 (Fed. Cir. 1988) (application filed in name of individual two days after mark was acquired by newly formed corporation held void); *Accu Personnel Inc.* v. *Accustaff Inc.*, 38 USPQ2d 1443 (TTAB 1996) (application filed in name of entity that did not yet exist not void); *In re Tong Yang Cement Corp.*, 19 USPQ2d 1689 (TTAB 1991) (application filed by joint venturer void where mark owned by joint venture); *U.S. Pioneer Electronics Corp.* v. *Evans Marketing, Inc.*, 183 USPQ 613 (Comm'r Pats. 1974) (misidentification of applicant's name may be corrected).

The Office also proposes to amend §§ 2.88(e)(3), 2.89(a)(3), and 2.89(b)(3) to state that if a statement of use or request for an extension of time to file a statement of use is unsigned or signed by the wrong party, a substitute verification must be submitted before the expiration of the statutory period for filing the statement of use. This is consistent with current practice. See TMEP §§ 1105.05(f)(i)(A) and 1105.05(d). Sections 1(d) (1) and (2) of the Act require verification by the owner within the statutory period for filing the statement of use. Therefore, the Office cannot extend or waive the deadline for filing the verification. *In re Kinsman*, 33 USPQ2d 1057 (Comm'r Pats. 1993).

Revival of Abandoned Applications

TLTIA §§ 103 and 104 amend §§ 1(d)(4) and 12(b) of the Act to permit the revival of an abandoned application where the delay in responding to an Office action or notice of allowance is ''unintentional.'' Currently, an abandoned application can be revived only if the delay was ''unavoidable,'' a much stricter standard. The ''unavoidable delay'' standard has been removed from the statute. See the discussion below of the proposed amendments to § 2.66 for the requirements for filing a petition to revive.

Post Registration

Statutory Changes

TLTIA §§ 105 and 106 amend: (1) § 8 of the Act, 15 U.S.C. 1058, to add a requirement for filing an affidavit or declaration of continued use or excusable nonuse (§ 8 affidavit) in the year before the end of every ten-year period after the date of registration; and (2) § 9 of the Act, 15 U.S.C. 1059, to delete the requirement for a declaration of continued use or excusable nonuse in a renewal application. Thus, every tenth year, the owner of a registration must file both a § 8 affidavit and a renewal application.

The statutory filing periods for the ten-year § 8 affidavits are the same as the statutory filing periods for the renewal applications. The Office will create a combined ''Section 8 and 9'' form to make it easy to make both filings in a single document. In substance, the requirements of the combined filing under amended §§ 8 and 9 will be the same as the requirements for renewal under current law.

A § 8 affidavit between the fifth and sixth year after the date of registration is also required. This is consistent with current law. No renewal application will be required during the sixth year.

TLTIA §§ 105 and 106 amend §§ 8 and 9 of the Act to permit filing within a six-month grace period after the end of the statutory filing period, with an additional surcharge.

TLTIA §§ 105 and 106 also amend §§ 8 and 9 to allow for the correction of deficient filings after the statutory filing period expires, with payment of an additional surcharge. The amended Act does not define deficiency or place any limits on the type of deficiency or omission that can be cured after expiration of the statutory filing period. The Commissioner has broad discretion to establish procedures and fees for curing deficiencies or omissions.

Fee Changes

The Office proposes to decrease the renewal fee from $300 to $200 per class.

As a result of increased administrative costs, the Office proposes to increase the filing fees for § 8 affidavits and for § 15 affidavits from $100 to $200 per class.

The proposed surcharge for filing a § 8 affidavit or § 9 renewal application during the grace period is $100 per class. This is consistent with the current renewal grace period fee.

The proposed surcharge for correcting a deficiency in a § 8 affidavit or a § 9 renewal application is $100. Sections 8(c)(2) and 9(a) of the Act require a surcharge for correcting deficiencies.

Recording Assignments and Changes of Name

Currently, the Office will record only an original document or a true copy of an original. TLTIA § 107 amends § 10 of the Act to allow recordation of a document that is not an original or a true copy.

Assignment of § 1(b) Applications

TLTIA § 107 amends § 10 to permit an assignment after the applicant files an amendment to allege use under § 1(c) of the Act. Currently, a § 1(b) application cannot be assigned until after the filing of a statement of use under § 1(d) of the Act, except to a successor to the applicant's business, or the portion of the business to which the mark pertains. This amendment corrects an oversight in the Trademark Law Revision Act of 1988 (Title 1 of Pub. Law No. 100–667, 102 Stat. 3935 (15 U.S.C. 1051)), which amended § 10 of the Act to permit an assignment of a § 1(b) application to someone other than a successor to the applicant's business only after the filing of a statement of use under § 1(d) of the Act. The substance of statements of use and amendments to allege use are the same, and the only difference is the time of filing, so there is no reason to treat them differently.

Discussion of Specific Rules Changed or Added

The Office proposes to amend rules 1.1, 1.4, 1.5, 1.6, 1.23, 2.1, 2.6, 2.17,

2.20, 2.21, 2.31, 2.32, 2.33, 2.34, 2.35, 2.37, 2.38, 2.39, 2.45, 2.51, 2.52, 2.56, 2.57, 2.58, 2.59, 2.66, 2.71, 2.72, 2.76, 2.86, 2.88, 2.89, 2.101, 2.111, 2.146, 2.151, 2.155, 2.156, 2.160, 2.161, 2.162, 2.163, 2.164, 2.165, 2.166, 2.167, 2.168, 2.173, 2.181, 2.182, 2.183, 2.184, 2.185, 2.186, 3.16, 3.24, 3.25, 3.28, 3.31, and 6.1.

The Office proposes to revise § 1.1(a)(2) to set forth all the addresses for filing trademark correspondence in one rule.

The Office proposes in § 1.1(a)(2)(i) to exempt papers filed electronically from the requirement that correspondence be mailed to the street address of the Office.

The Office proposes to state in § 1.1(a)(2)(v) that an applicant may transmit an application for trademark registration electronically, but only if the applicant uses the Office's electronic form.

The Office proposes to amend § 1.4(a)(2) to correct a cross-reference.

The Office proposes to add a new § 1.4(d)(1)(iii) to provide for signature of electronically transmitted trademark filings, where permitted.

The Office proposes to amend § 1.5(c) to clarify the requirements for identifying trademark applications and registrations.

The Office proposes to amend § 1.6(a) to provide that the Office will consider trademark-related correspondence transmitted electronically to have been filed on the date of transmission, regardless of whether that date is a Saturday, Sunday, or Federal holiday within the District of Columbia. This is consistent with the treatment of correspondence filed as Express Mail with the United States Postal Service under § 1.10.

The Office proposes to amend § 1.23 to allow payments for electronic applications and other electronic submissions authorized by the Office by a credit card identified on the electronic form.

The Office proposes to revise § 2.1 to update a cross-reference.

The Office proposes to amend § 2.6(a)(5) to decrease the filing fee for a renewal application from $300 to $200 per class.

The Office proposes to amend § 2.6(a)(6) to delete reference to the three-month renewal grace period. TLTIA changes the grace period to six months.

The Office proposes to amend § 2.6(a)(12) to increase the fee for filing a § 8 affidavit from $100 to $200 per class, due to increased administrative costs.

The Office proposes to revise § 2.6(a)(13) to increase the fee for filing a § 15 affidavit from $100 to $200 per class, due to increased administrative costs.

The Office proposes to remove § 2.6(a)(14) because it is unnecessary. The cost of a combined affidavit or declaration under §§ 8 and 15 of the Act is the sum of the cost of the individual filings.

The Office proposes to add new § 2.6(a)(14) requiring a $100 surcharge per class for filing a § 8 affidavit during the grace period.

The Office proposes to amend § 2.6(a)(19) to increase the fee for filing a request to divide an application from $100 to $300 per new application created. The Office believes that a $300 fee reflects the extensive amount of work required to process a request to divide.

The Office proposes to add new § 2.6(a)(20), requiring a $100 surcharge for correcting a deficiency in a § 8 affidavit. Amended § 8(c)(2) of the Act requires a deficiency surcharge.

The Office proposes to add new § 2.6(a)(21), requiring a $100 surcharge for correcting a deficiency in a renewal application. Section 9(a) of the Act, as amended, requires a deficiency surcharge.

The Office proposes to add new § 2.17(c), stating that to be recognized as a representative in a trademark case, an attorney as defined in § 10.1(c) may file a power of attorney, appear in person, or sign a paper on behalf of an applicant or registrant that is filed with the Office. This codifies current practice.

The Office proposes to add new § 2.17(d), stating that someone may file a power of attorney that relates to more than one trademark application or registration, or to all existing and future applications and registrations; and that someone relying on a power of attorney concerning numerous applications or registrations must: (1) include a copy of the previously filed power of attorney; or (2) refer to the previously filed power of attorney, specifying: the filing date; the application serial number, registration number, or *inter partes* proceeding number for which the original power of attorney was filed; and the name of the party who signed the power of attorney; or, if the application serial number is not known, submit a copy of the application or a copy of the mark, and specify the filing date.

The Office proposes to revise § 2.20 to delete the requirement for a declaration by a ''member of the firm or an officer of the corporation or association,'' because this requirement has been deleted from §§ 1(a) and 1(b) of the Act.

The Office proposes to revise § 2.21, listing the minimum requirements for receipt of an application filing date. The proposed minimum filing requirements are: (1) the name of the applicant; (2) a name and address for correspondence; (3) a clear drawing of the mark; (4) an identification of goods or services; and (5) the filing fee for at least one class of goods or services.

The Office proposes to delete the following minimum requirements for receiving a filing date: a stated basis for filing; a verification or declaration signed by the applicant; an allegation of use in commerce, specimen, and date of first use in commerce in an application under § 1(a) of the Act; an allegation of the applicant's bona fide intention to use the mark in commerce in an application under § 1(b) or § 44 of the Act; a claim of priority in an application under § 44(d) of the Act; and a certified copy of a foreign registration in an application under § 44(e) of the Act. A claim of priority under § 44(d) must be filed before the end of the priority period. All other elements must be provided before the mark is published for opposition or approved for registration on the Supplemental Register.

The Office proposes to require in § 2.21(a)(3) a ''clear drawing of the mark'' rather than the drawing ''substantially meeting all the requirements of § 2.52'' that is now required.

The Office proposes to state in § 2.21(b) that the Office ''may'' rather than ''will'' return the papers and fees to the applicant when an application does not meet the minimum filing requirements. A new procedure is being considered under which the Office would retain applications that do not meet the minimum filing requirements. Applicants would have an opportunity to supply the missing element and receive a filing date as of the date the Office receives the missing element. Until a new policy is announced, the Office will continue to return the papers and fees to the applicant.

The Office proposes to delete the center heading ''THE WRITTEN APPLICATION'' before § 2.31 because it is unnecessary. The heading ''APPLICATION FOR REGISTRATION,'' immediately before § 2.21, encompasses the rules that now fall under the heading ''THE WRITTEN APPLICATION.''

The Office proposes to remove and reserve § 2.31, and to move the substance of the requirement that the application be in English to § 2.32(a).

The Office proposes to change the heading of § 2.32 to ''Requirements for

written application,'' and to revise the rule. Proposed § 2.32(a) lists the requirements for the written application, now listed in § 2.33(a)(1).

Proposed § 2.32 does not require a statement of the applicant's method or intended method of use of the mark, because §§ 1(a) and 1(b) of the Act, as amended, no longer require that applicants state the mode or manner in which a mark is used.

The Office proposes to change the heading of § 2.33 to ''Verified statement'' and revise the rule.

The Office proposes to revise § 2.33(a) to state that the application must include a statement that is signed and verified (sworn to) or supported by a declaration under § 2.20 by a person properly authorized to sign on behalf of the applicant. The proposed rule further states that a person who is properly authorized to sign on behalf of the applicant includes a person with legal authority to bind the applicant and/or a person with firsthand knowledge and actual or implied authority to act on behalf of the applicant.

The Office proposes to move the substance of § 2.32(b) to § 2.33(c), and revise it to state that the Office may require a substitute verification of the applicant's continued use or bona fide intention to use the mark when the applicant does not file the verified statement within a reasonable time after the date it is signed. This codifies present practice. Section 2.32(b) now states only that a verification of the applicant's continued use of the mark is required where the application is not filed within a reasonable time after it is signed. However, the Office also requires verification of the applicant's continued *bona fide intention to use* the mark in commerce when a verification under § 1(b) or § 44 of the Act is not filed within a reasonable time after it is signed. TMEP § 803.04.

The Office proposes to add § 2.33(d), stating that where an electronically transmitted filing is permitted, the person who signs the verified statement must either: (1) place a symbol comprised of numbers and/or letters between two forward slash marks in the signature block on the electronic document; and print, sign and date in permanent ink, and maintain a paper copy of the electronic submission; or (2) use some other form of electronic signature that the Commissioner may designate.

Proposed § 2.33(d)(1) states that applicants who submit electronic documents must sign and date in permanent ink, and maintain a verified statement confirming that the signatory has adopted the symbol shown in the signature block to verify the contents of the document, and that the information in the electronic submission is identical to the information in the paper copy of the submission.

The Office proposes to add new § 2.34, ''Bases for filing.'' Currently, an applicant must establish a basis for filing to receive a filing date. Under the proposed new rules, a stated filing basis will no longer be included as one of the minimum requirements for receipt of a filing date. If missing, it must be provided before the mark is published for opposition or approved for registration on the Supplemental Register.

The Office proposes that the requirements for each of the four bases be moved from § 2.21(a)(5) to § 2.34(a). Section 2.34(a)(1) will list the requirements for an application under § 1(a) of the Act, now listed in §§ 2.21(a)(5)(i), 2.33(a)(1)(iv), 2.33(a)(1)(vii), 2.33(a)(2), and § 2.33(b)(1). Section 2.34(a)(2) will list the requirements for an application under § 1(b) of the Act, now listed in §§ 2.21(a)(5)(iv) and 2.33(a)(1)(iv).

Section 2.34(a)(3) will list the requirements for an application under § 44(e) of the Act, now listed in §§ 2.21(a)(5)(ii) and 2.33(a)(1)(viii). Section 2.34(a)(3)(ii) will require a certified copy of a foreign registration. Currently, a § 44(e) applicant must submit a foreign certificate to receive a filing date. However, TLTIA § 108 amends § 44(e) of the Act to delete the requirement that the application be ''accompanied by'' the foreign certificate. The Office proposes to require that the applicant submit the certificate before the mark is published for opposition or approved for registration on the Supplemental Register.

The Office proposes to add § 2.34(a)(3)(iii), stating that if it appears that the foreign registration will expire before the mark in the United States application will register, the applicant must submit a certification from the foreign country's trademark office, showing that the registration has been renewed and will be in force at the time the United States registration will issue. This codifies current practice. TMEP § 1004.03.

The Office proposes that § 2.34(a)(4) will list the requirements for an application under § 44(d) of the Act, now listed in §§ 2.21(a)(5)(iii), 2.33(a)(1)(ix), and 2.39. Proposed § 2.34(a)(4)(i) requires that a priority claim be filed within six months of the filing date of the foreign application. This is consistent with Articles 4(C)(1) and 4(D)(1) of the Paris Convention for the Protection of Industrial Property, as revised at Stockholm on July 14, 1967 (Paris Convention).

The Office proposes to state in § 2.34(b)(1) that an applicant may claim more than one basis, provided that the applicant meets the requirements for all bases claimed. This codifies current practice. The Office also proposes to state that the applicant may not claim both §§ 1(a) and 1(b) for the identical goods or services in one application.

In § 2.34(b)(2), the Office proposes to require that the applicant specify which basis covers which goods or services when an applicant claims more than one basis.

In § 2.34(c), the Office proposes to set forth the definition of ''commerce'' currently found in § 2.33(a)(3).

The Office proposes to remove § 2.37.

The Office proposes to redesignate § 2.35 as § 2.37.

The Office proposes to add new § 2.35, ''Adding, deleting, or substituting bases.''

The Office proposes to state in § 2.35(a) that the applicant may add or substitute a basis for registration before publication, and that the applicant may delete a basis at any time.

The Office proposes to state in § 2.35(b) that the applicant cannot amend an application to add or substitute a basis after publication. This changes practice. Prior to 1995, the Office did not accept amendments adding or substituting a basis for registration after publication. This policy was changed by *In re Monte Dei Maschi Di Siena*, 34 USPQ2d 1415 (Comm'r Pats. 1995). Currently, the Office will accept an amendment to add or substitute a basis for registration after publication if the applicant files a petition to the Commissioner; republication is required. TMEP § 1006.04.

After three years of experience, the Office does not believe that accepting these amendments is in the public interest, because the amendments reopen examination. This delays later-filed conflicting applications, which must be suspended indefinitely until the earlier-filed application is either registered or abandoned. Therefore, the Office proposes to prohibit amendments that add or substitute a basis after publication.

The Office proposes to state in § 2.35(c) that when the applicant substitutes a basis, the Office will presume that the original basis was valid, unless there is contradictory evidence in the record, and the application will retain the original filing date.

Under present practice, if the applicant changes the basis from § 1(a) or § 1(b) to § 44(e), or from § 44(e) to either § 1(a) or § 1(b), the applicant retains the original filing date. However, if an application is filed solely under § 44(d), and the applicant amends to substitute a different basis after the expiration of the six-month priority period, the effective filing date of the application becomes the date the applicant perfects the amendment claiming the new basis. TMEP § 1006.03.

The Office proposes to change this practice, to allow a § 44(d) applicant to retain the priority filing date when the applicant substitutes a new basis after the expiration of the six-month priority period.

The Office proposes to state in § 2.35(d) that if an applicant properly claims a § 44(d) basis in addition to another basis, the applicant will retain the priority filing date under § 44(d) no matter which basis the applicant perfects. This codifies current practice. TMEP § 1006.01.

The Office proposes to state in § 2.35(e) that the applicant may add or substitute a § 44(d) basis only within the six-month priority period following the filing date of the foreign application. This is consistent with current practice (TMEP § 1006.05), and with Articles 4(C)(1) and 4(D)(1) of the Paris Convention.

In § 2.35(f), the Office proposes to state that an applicant who adds a basis must state which basis covers which goods or services.

The Office proposes to state in § 2.35(g) that if an applicant deletes a basis, the applicant must also delete any goods or services covered solely by the deleted basis. This codifies current practice.

The Office proposes to state in § 2.35(h) that once an applicant claims a § 1(b) basis as to any or all of the goods or services, the applicant may not amend the application to seek registration under § 1(a) of the Act for those goods or services unless the applicant files an allegation of use under § 1(c) or § 1(d) of the Act.

The Office proposes to amend § 2.38(a) to update a cross-reference.

The Office proposes to remove and reserve § 2.39, and to move the requirements for filing a priority claim under § 44(d) of the Act to § 2.34(a)(4), discussed above.

The Office proposes to revise §§ 2.45(a) and (b) to: (1) delete the requirement for a statement of the method or intended method of use in a certification mark application; and (2) require a copy of the standards that determine whether others may use the certification mark on their goods and/or in connection with their services. Sections 1(a) and 1(b) of the Act, as amended, no longer require a statement of the method or intended method of use of a mark. The requirement for a copy of the certification standards codifies current practice. TMEP § 1306.06(g)(ii).

The Office proposes to remove §§ 2.51(c) through (e), and move the substance of those rules to § 2.52.

The Office proposes to revise § 2.52(a) to define the term ''drawing,'' to indicate that a drawing may only depict a single mark, and to define the terms ''typed drawing'' and ''special form drawing.''

The Office proposes to add guidelines in § 2.52(a) for drawings of various types of unusual marks, such as marks that include color, three-dimensional objects, motion, sound or scent; and to add guidelines for showing placement of the mark on goods, packaging for goods, or in advertising of services.

The Office proposes to indicate the recommended format for the drawing of a mark in § 2.52(b).

The Office proposes to revise § 2.52(c) to state that for an electronically filed application, if the mark cannot be shown as a ''typed drawing,'' the applicant must attach a digitized image of the mark to the application.

The Office proposes to consolidate §§ 2.56, 2.57 and 2.58 into § 2.56, and to remove and reserve §§ 2.57 and 2.58.

The Office proposes to revise § 2.56(a) to require one rather than three specimens with an application under § 1(a) of the Act, or an allegation of use under § 1(c) or § 1(d) of the Act in an application under § 1(b) of the Act. See the discussion above under ''Supplementary Information/Number of Specimens Required.''

The Office proposes to add § 2.56(b)(1), stating that a trademark specimen is a label, tag, or container for the goods, or a display associated with the goods; and that the Office may accept another document related to the goods or the sale of the goods when it is not possible to place the mark on the goods or packaging for the goods. This is consistent with the current § 2.56.

The Office proposes to add § 2.56(b)(2), stating that a service mark specimen must show the mark as actually used in the sale or advertising of the services. This is consistent with the current § 2.58(a).

The Office proposes to add § 2.56(b)(3), stating that a collective trademark or collective service mark specimen must show how a member uses the mark on the member's goods or in the sale or advertising of the member's services. This codifies current practice. TMEP § 1303.02(b).

The Office proposes to add § 2.56(b)(4), stating that a collective membership mark specimen must show use by members to indicate membership in the collective organization. This codifies current practice. TMEP § 1304.09(c).

The Office proposes to add § 2.56(b)(5), stating that a certification mark specimen must show how a person other than the owner uses the mark to certify regional or other origin, material, mode of manufacture, quality, accuracy, or other characteristics of the person's goods or services; or that members of a union or other organization performed the work or labor on the goods or services. This codifies current practice. TMEP § 1306.06(c).

The Office proposes to add § 2.56(c), stating that a photocopy or other reproduction of a specimen is acceptable, but that a photocopy or facsimile that merely reproduces the drawing is not a proper specimen. This is consistent with the current § 2.57.

Proposed new § 2.56(d)(1) states that a specimen must be flat and no larger than 8½ inches (21.6 cm.) wide by 11.69 inches (29.7 cm.) long. This is consistent with the current § 2.56.

The Office proposes to add § 2.56(d)(2), stating that if the applicant files a specimen that is too large (a ''bulky specimen''), the Office will create a facsimile of the specimen that meets the requirements of the rule (i.e., is flat and no larger than 8½ inches (21.6 cm.) wide by 11.69 inches (29.7 cm.) long) and put it in the file wrapper. See the discussion above under ''Supplementary Information/Bulky Specimens.''

The Office proposes to add § 2.56(d)(4), stating that if the application is filed electronically, the specimen must be submitted as a digitized image.

The Office proposes to revise § 2.59 to clarify and simplify the language.

The Office proposes to rewrite § 2.66 to set forth the requirements for filing a petition to revive an abandoned application when the delay in responding to an Office action or notice of allowance is ''unintentional.'' Currently, an applicant can revive an abandoned application only if the delay was ''unavoidable,'' a much stricter standard. TLTIA §§ 103 and 104 amend §§ 1(d)(4) and 12(b) of the Act to permit an application to be revived if the delay is ''unintentional.'' The ''unavoidable delay'' standard has been removed from the statute, effective October 30, 1999.

The Office proposes to add §§ 2.66(a)(1) and (2), requiring that the applicant file a petition to revive within (1) two months of the mailing date of the notice of abandonment; or (2) two months of actual knowledge of abandonment. Currently, the deadline for filing a petition to revive is sixty days. TMEP § 1112.05(a). The two-month deadline will make it easier to calculate the due date for a petition because it will not be necessary to count days.

The Office also proposes to state in § 2.66(a)(2) that an applicant must be diligent in checking the status of an application. This codifies current practice. TMEP §§ 413 and 1112.05(b)(ii). The Office now denies petitions to revive when the applicant waits too long before checking the status of an application. To be diligent, the applicant must check the status of the application within one year of the last filing or receipt of a notice from the Office. Applicants can check the status of applications through the Trademark Status Line, or through the Office's World Wide Web site at *www.uspto.gov*. This is consistent with proposed § 2.146(i), discussed below.

The Office proposes to amend §§ 2.66(b)(2) and (c)(2) to require ''a statement, signed by someone with firsthand knowledge of the facts, that the delay * * * was unintentional,'' rather than the ''showing of the causes of the delay'' that these rules now require.

The Office proposes to delete the requirement that a petition to revive include a statement that is verified or supported by a declaration under § 2.20. This is unnecessary because § 10.18(b), as amended effective December 1, 1997, states that any party who presents a paper to the Office is certifying that all statements are true and attesting to an awareness of the penalty for perjury. This proposed amendment is consistent with amendments to §§ 1.8(b)(3), 1.10(d), 1.10(e), 1.137(a)(3), and 1.137(b)(3), also effective December 1, 1997. 62 FR 53186 (Oct. 10, 1997).

The Office proposes to amend § 2.66(b)(3) to state that if the applicant did not receive the Office action, the applicant need not include a proposed response to an Office action with a petition to revive. This codifies current practice.

The Office proposes to amend §§ 2.66(c)(3) and (4) to state that if the applicant did not receive the notice of allowance, the petition to revive need not include a statement of use or request for an extension of time to file a statement of use, or the fees for the extension requests that would have been due if the application had never been abandoned. This codifies current practice.

The Office proposes to add § 2.66(c)(5), stating that unless a statement of use is filed with or before the petition to revive, or the petition states that the applicant did not receive the notice of allowance, the applicant must file any further requests for extensions of time to file a statement of use under § 2.89 that become due while the petition is pending, or file a statement of use. This codifies current practice.

The Office proposes to add § 2.66(f)(3), stating that if the Commissioner denies the petition to revive, the applicant may request reconsideration by: (1) filing the request within two months of the mailing date of the decision denying the petition; and (2) paying a second petition fee under § 2.6. Currently, the rules do not specifically provide for requests for reconsideration of petition decisions, but the Commissioner has the discretion to consider these requests under § 2.146(a)(3). The Office believes that an additional fee should be required to pay for the work done in processing the request for reconsideration. This is consistent with proposed § 2.146(j).

The Office proposes to revise § 2.71(a) to state that the applicant may amend the identification to clarify or limit, but not broaden, the identification of goods and/or services. This simplifies the language of the current § 2.71(b).

Proposed § 2.71(b)(1) states that if the declaration or verification of an application under § 2.33 is unsigned or signed by the wrong party, the applicant may submit a substitute verification or declaration under § 2.20. This changes current practice. Currently, the applicant must submit a signed verification to receive an application filing date, and if the verification is signed by the wrong party, the applicant cannot file a substitute verification unless the party who originally signed had ''color of authority'' (i.e., firsthand knowledge of the facts and actual or implied authority to act on behalf of the applicant). TMEP § 803. As discussed above, the Office proposes to delete the requirement that the applicant submit a signed verification in order to receive a filing date. If the verification is unsigned or signed by the wrong party, the applicant must replace the declaration before the mark is published for opposition or approved for registration on the Supplemental Register.

The Office proposes to delete the requirement for a verification ''by the applicant, a member of the applicant firm, or an officer of the applicant corporation or association'' from § 2.71(c). This is consistent with the amendments to §§ 1(a) and 1(b) of the Act.

The Office also proposes to delete the ''color of authority'' provisions from § 2.71(c). Because the statute no longer specifies who has ''statutory'' authority to sign, the ''color of authority'' provisions are unnecessary.

The Office proposes to state in § 2.71(b)(2) that if the declaration or verification of a statement of use under § 2.88 or a request for extension of time to file a statement of use under § 2.89 is unsigned or signed by the wrong party, the applicant must submit a substitute verification before the expiration of the statutory deadline for filing the statement of use. This is consistent with current practice and with the proposed amendments to §§ 2.88(e)(3), 2.89(a)(3), and 2.89(b)(3), discussed below.

The Office proposes to add new § 2.71(d), stating that a mistake in setting out the applicant's name can be corrected, but the application cannot be amended to set forth a different entity as the applicant; and that an application filed in the name of an entity that did not own the mark on the filing date of the application is void. This codifies current practice. TMEP § 802.07. See the discussion above under ''Supplementary Information/Filing by Owner.''

The Office proposes to revise § 2.72 to remove paragraph (a), and redesignate paragraphs (b) through (d) as (a) through (c).

The Office proposes that new paragraphs (a) through (c) will each state that an applicant may not amend the description or drawing of the mark if the amendment materially alters the mark; and that the Office will determine whether a proposed amendment materially alters a mark by comparing the proposed amendment with the description or drawing of the mark in the original application. These provisions are now stated in paragraph (a).

Under the current § 2.72, as interpreted by *In re ECCS, Inc.*, 94 F.3d 1578, 39 USPQ2d 2001 (Fed. Cir. 1996) and *In re Dekra e.V.*, 44 USPQ2d 1693 (TTAB 1997), an applicant may amend an application to correct an ''internal inconsistency.'' An application is ''internally inconsistent'' if the mark on the drawing does not agree with the mark on the specimens in an application based on use, or with the mark on the foreign registration in an application based on § 44 of the Act.

Currently, because §§ 2.72(b), (c) and (d) do not expressly prohibit an

amendment that materially alters the mark on the original drawing, the Office accepts amendments that correct ''internal inconsistencies,'' regardless of whether the amendment materially alters the mark on the original drawing. TMEP § 807.14(a).

The Office does not believe that it is in the public interest to accept amendments that materially alter the mark on the original drawing. When the Office receives a new application, the mark on the drawing is promptly filed in the Trademark Search Library and entered into the Office's electronic and administrative systems. Accepting an amendment that materially alters the mark on the original drawing is unfair to third parties who search Office records between the application filing date and the date the amendment is entered, because they do not have accurate information about earlier-filed applications. A third party may innocently begin using a mark that conflicts with the amended mark, but not with the original mark, relying on the search of Office records. Also, an examining attorney may approve a later-filed application for registration of a mark that conflicts with the amended mark, but not with the original mark. Therefore, the Office proposes to amend § 2.72 to prohibit amendments that materially alter the mark on the original drawing.

The Office proposes to revise § 2.76(b)(1) to state that a complete amendment to allege use must include a statement that is verified or supported by a declaration under § 2.20 by a person properly authorized to sign on behalf of the applicant.

The Office proposes to further revise § 2.76(b)(1) to delete the requirement for a statement of the method or manner of use of the mark in an amendment to allege use, because this requirement has been removed from §§ 1(a) and 1(b) of the Act.

The Office proposes to revise § 2.76(b)(2) to require one rather than three specimens with an amendment to allege use. See the above discussion under ''Supplementary Information/ Number of Specimens Required.''

The Office proposes to add new § 2.76(i), stating that if an amendment to allege use is not filed within a reasonable time after it is signed, the Office may require a substitute verification or declaration under § 2.20 that the mark is still in use in commerce. This codifies current practice. TMEP § 803.04.

The Office proposes to add new § 2.76(j), noting that the requirements for multi-class applications are stated in § 2.86.

The Office proposes to change the heading of § 2.86 to ''Application may include multiple classes.'' The Office proposes to remove current § 2.86(a), which states that an applicant may recite more than one item of goods, or more than one service, in a single class, if the applicant either has used or has a bona fide intention to use the mark on all the goods or services. The substance of this provision will be moved to §§ 2.34(a)(1)(v), 2.34(a)(2)(ii), 2.34(a)(3)(iv) and 2.34(a)(4)(iv).

The Office proposes to revise § 2.86(a) to include sections now found in § 2.86(b), stating that the applicant may apply to register the same mark for goods and/or services in multiple classes in a single application, provided that the applicant specifically identifies the goods and services in each class; submits a fee for each class; and either includes dates of use and one specimen, or a statement of a bona fide intention to use the mark in commerce, for each class. The Office also proposes to add in § 2.86(a)(3) a provision that the applicant may not claim both use in commerce and a bona fide intention to use the mark in commerce for the identical goods or services in one application.

The Office proposes to state in § 2.86(b) that a statement of use or amendment to allege use must include the required fee, dates of use, and one specimen for each class. The requirement for only one specimen is consistent with the proposed amendments to §§ 2.56(a), 2.76(b)(2), and 2.88(b)(2).

The Office also proposes to add to § 2.86(b) a provision that the applicant may not file the statement of use or amendment to allege use until the applicant has used the mark on all the goods or services, unless the applicant files a request to divide. This is consistent with the current §§ 2.76(c) and 2.88(c).

The Office proposes to delete the current § 2.86(c), which prohibits an applicant from claiming both use in commerce and intent-to-use in a single multi-class application. However, the Office proposes to state in § 2.86(a)(3) that the applicant may not claim both use in commerce and intent-to-use for the identical goods or services in one application.

The Office proposes to move the substance of the last sentence of the current § 2.86(b) to new § 2.86(c).

The Office proposes to revise § 2.88(b)(1) to state that a complete statement of use must include a statement that is verified or supported by a declaration under § 2.20 by a person properly authorized to sign on behalf of the applicant.

The Office proposes to revise § 2.88(b)(1) to delete the requirement for a statement of the method or manner of use in a statement of use. This requirement has been removed from § 1(d)(1) of the Act.

The Office proposes to revise § 2.88(b)(2) to require one specimen with a statement of use, rather than the three specimens now required. This is consistent with the proposed amendment of § 2.56(a).

The Office proposes to revise § 2.88(e)(3) to state that if the verification or declaration is unsigned or signed by the wrong party, the applicant must submit a substitute verification or declaration on or before the statutory deadline for filing the statement of use. This is consistent with current practice. TMEP § 1105.05(f)(i)(A). Section 1(d)(1) of the Act specifically requires verification by the applicant within the statutory period for filing the statement of use.

The Office proposes to add § 2.88(k), stating that if the statement of use is not filed within a reasonable time after it is signed, the Office may require a substitute verification or declaration under § 2.20 stating that the mark is still in use in commerce. This codifies current practice. TMEP § 803.04.

The Office proposes to add § 2.88(l), noting that the requirements for multi-class applications are stated in § 2.86.

The Office proposes to revise §§ 2.89(a)(3) and (b)(3) to require that a request for an extension of time to file a statement of use include a statement that is verified or supported by a declaration under § 2.20 by a person properly authorized to sign on behalf of the applicant; and that if the extension request is unsigned or signed by the wrong party, the applicant must submit a substitute verification or declaration on or before the statutory deadline for filing the statement of use. This is consistent with current practice. TMEP § 1105.05(d). Sections 1(d) (1) and (2) of the Act specifically require verification by the applicant within the statutory filing period.

The Office proposes to revise § 2.89(d) to remove paragraph (1), which requires a statement that the applicant has not yet made use of the mark in commerce on all the goods and services. The Commissioner has held that an extension request that omits this allegation is substantially in compliance with § 2.89(d) if the request contains a statement that the applicant has a continued bona fide intention to use the mark in commerce. *In re Schering-Plough Healthcare Products Inc.,* 24

USPQ2d 1709 (Comm'r Pats. 1992). Therefore, the requirement is unnecessary.

The Office proposes to add § 2.89(h), stating that if the extension request is not filed within a reasonable time after it is signed, the Office may require a substitute verification or declaration under § 2.20 that the applicant still has a bona fide intention to use the mark in commerce. This codifies current practice. TMEP § 803.04.

The Office proposes to revise § 2.101(d)(1) to update a cross-reference.

The Office proposes to revise § 2.111(c)(1) to update a cross-reference.

The Office proposes to revise § 2.146(d) to delete ''sixty days'' and substitute ''two months'' as the deadline for filing certain petitions. This will make it easier to calculate the due date for a petition because it will not be necessary to count days.

The Office proposes to add § 2.146(i), stating that where a petitioner seeks to reactivate an application or registration that was abandoned or cancelled due to the loss or mishandling of papers mailed to or from the Office, the petition will be denied if the petitioner was not diligent in checking the status of the application or registration. This codifies current practice. TMEP §§ 413 and 1704. Even where a petitioner can show that the Office actually received papers, or can swear that a notice from the Office was never received by the petitioner, the Office now denies the petition if the petitioner waited too long before investigating the problem. This is because third parties may rely to their detriment on the information in the records of the Office that an application is abandoned or that a registration is expired. A third party may have diligently searched Office records and begun using a mark because the search showed no earlier-filed conflicting marks, or an examining attorney may have searched Office records and approved an earlier-filed application for a conflicting mark. This is consistent with the proposed amendment of § 2.66(a)(2), discussed above.

The Office proposes to add § 2.146(j), stating that if the Commissioner denies the petition, the petitioner may request reconsideration by: (1) filing the request within two months of the mailing date of the decision denying the petition; and (2) paying a second petition fee under § 2.6. Currently, the rules do not specifically provide for requests for reconsideration of petition decisions, but the Commissioner has the discretion to consider these requests under § 2.146(a)(3). The Office believes that an additional fee should be required to pay for the work done in processing the request for reconsideration. This is consistent with proposed § 2.66(f)(3), discussed above.

The Office proposes to revise § 2.151 to update a cross-reference and simplify the language.

The Office proposes to revise § 2.155 to update a cross-reference and simplify the language.

The Office proposes to revise § 2.156 to update a cross-reference and simplify the language.

The Office proposes to add § 2.160, ''Affidavit or declaration of continued use or excusable nonuse required to avoid cancellation.'' Proposed §§ 2.160(a) (1) and (2) list the deadlines for filing the affidavit or declaration, and proposed § 2.160(a)(3) states that the owner may file the affidavit or declaration within six months after expiration of these deadlines, with an additional grace period surcharge. Currently, there is no grace period for filing a § 8 affidavit.

Proposed § 2.160(b) advises that § 2.161 lists the requirements for the affidavit or declaration.

The Office proposes to change the heading of § 2.161 to ''Requirements for a complete affidavit or declaration of continued use or excusable nonuse,'' and to revise § 2.161 to list the proposed requirements for the affidavit or declaration.

The Office proposes to revise § 2.161(a) to state that the owner must file the affidavit or declaration within the period set forth in § 8 of the Act.

The Office proposes to revise § 2.161(b) to state that the affidavit or declaration must include a verified statement that is signed and verified (sworn to) or supported by a declaration under § 2.20 by a person properly authorized to sign on behalf of the owner, attesting to the continued use or excusable nonuse of the mark within the period set forth in § 8 of the Act. The Office also proposes to revise § 2.161(b)(2) to state that a person properly authorized to sign on behalf of the owner includes a person with legal authority to bind the owner and/or a person with firsthand knowledge and actual or implied authority to act on behalf of the owner.

The Office proposes to add § 2.161(d)(2), requiring a surcharge for filing an affidavit or declaration of continued use or excusable nonuse during the grace period.

The Office proposes to add § 2.161(d)(3), stating that if the fee submitted is enough to pay for at least one class, but not enough to pay for all the classes, and the particular class(es) covered by the affidavit or declaration are not specified, the Office will issue a notice requiring either the submission of additional fee(s) or an indication of the class(es) to which the original fee(s) should be applied; that additional fee(s) may be submitted if the requirements of § 2.164 are met; and that if additional fees are not submitted and the class(es) to which the original fee(s) should be applied are not specified, the Office will presume that the fee(s) cover the classes in ascending order, beginning with the lowest numbered class.

Proposed § 2.161(e) requires that the affidavit or declaration list both the goods or services on which the mark is in use in commerce and the goods or services for which excusable nonuse is claimed. Currently, a list of the goods or services is not required when excusable nonuse is claimed. *In re Conusa Corp.*, 32 USPQ2d 1857 (Comm'r Pats. 1993). However, TLTIA § 105 amends § 8(b)(2) of the Act to specifically require ''an affidavit setting forth those goods on or in connection with which the mark is not in use.''

The Office proposes to eliminate the requirement that the affidavit or declaration specify the type of commerce in which the mark is used, currently required by § 2.162(e). Section 8 of the Act does not require that the affidavit or declaration list the type of commerce. Because the definition of ''commerce'' in § 45 of the Act is ''all commerce which may lawfully be regulated by Congress,'' the Office will presume that a registrant who states that the mark is in use in commerce is stating that the mark is in use in a type of commerce that Congress can regulate.

The Office proposes to move the substance of § 2.162(f) to § 2.161(f)(2), and to revise it to add a requirement that the affidavit state the date when use of the mark stopped and the approximate date when use will resume. This codifies current practice. Office actions are often issued requiring a statement as to when use of the mark stopped and when use will resume, because this information is needed to determine whether the nonuse is excusable, within the meaning of § 8 of the Act.

The Office proposes to move the substance of § 2.162(e) to § 2.161(g), and to revise it to state that the affidavit must include a specimen for each class of goods or services; that the specimen should be no larger than 8½ inches (21.6 cm.) wide by 11.69 inches (29.7 cm.) long; and that if the applicant files a specimen that exceeds these size requirements (a ''bulky specimen''), the Office will create a facsimile of the specimen that meets the requirements of the rule (i.e., is flat and no larger than 8½ inches (21.6 cm.) wide by 11.69

inches (29.7 cm.) long) and put it in the file wrapper. See the discussion above under ''Supplementary Information/ Bulky Specimens.''

The Office proposes to add § 2.161(h), requiring a designation of a domestic representative if the registrant is not domiciled in the United States. This reflects § 8(f) of the Act, as amended, and is consistent with current practice.

The Office proposes to move the substance of § 2.163 to § 2.162, and to revise it to say that the only notice of the requirement for filing the § 8 affidavit or declaration of continued use or excusable nonuse is sent with the certificate of registration when it is originally issued. This merely clarifies, and does not change, current practice.

The Office proposes to move the substance of current § 2.164 to the introductory text of new § 2.163.

The Office proposes to state in § 2.163(a) that if the owner of the registration files the affidavit or declaration within the time periods set forth in § 8 of the Act, deficiencies may be corrected if the requirements of § 2.164 are met.

The Office proposes to add § 2.163(b), stating that a response to an examiner's Office action must be filed within six months of the mailing date, or before the end of the filing period set forth in § 8(a) or § 8(b) of the Act, whichever is later, or the registration will be cancelled.

The Office proposes to add § 2.164, ''Correcting deficiencies in affidavit or declaration.'' This section changes current practice. There are now some deficiencies that can be corrected after the statutory deadline for filing the affidavit or declaration, such as supplying evidence that the party who filed the affidavit or declaration was the owner of the mark as of the filing date, or submitting an additional fee. Other requirements must be satisfied before the expiration of the statutory deadline to avoid cancellation of the registration. *In re Mother Tucker's Food Experience (Canada) Inc.,* 925 F.2d 1402, 17 USPQ2d 1795 (Fed. Cir. 1991) (allegation of use in commerce); *In re Metrotech,* 33 USPQ2d 1049 (Comm'r Pats. 1993) (specimen); *In re Bonbons Barnier S.A.,* 17 USPQ2d 1488 (Comm'r Pats. 1990) (listing of goods or services).

TLTIA § 105 adds § 8(c)(2) of the Act to allow correction of deficiencies, with payment of a deficiency surcharge. The Act does not define ''deficiency,'' but instead gives the Office broad discretion to set procedures and fees for correcting deficiencies.

Proposed § 2.164(a)(1) states that if the owner files the affidavit or declaration within the period set forth in § 8(a) or § 8(b) of the Act, deficiencies can be corrected before the end of this period without paying a deficiency surcharge; and deficiencies can be corrected after the expiration of this period with payment of the deficiency surcharge.

The Office proposes to state in § 2.164(a)(2) that if the owner files the affidavit or declaration during the grace period, deficiencies can be corrected before the expiration of the grace period without paying a deficiency surcharge, and after the expiration of the grace period with a deficiency surcharge.

The Office proposes to state in § 2.164(b) that if the affidavit or declaration is not filed within the time periods set forth in § 8 of the Act, or if it is filed within that period by someone other than the owner, the registration will be cancelled. These deficiencies cannot be cured.

Because § 8(c)(2) of the Act specifically requires a deficiency surcharge, the Office proposes to require the deficiency surcharge for correcting any type of deficiency, even one that could be corrected for no fee under current law.

The Office proposes to change the heading of § 2.165 to ''Petition to Commissioner to review refusal''; to remove the last two sentences of the current § 2.165(a)(1); and to simplify the language of the rule.

The Office proposes to remove present § 2.166 because it is unnecessary. Proposed §§ 2.163(b) and 2.165(b) set forth the times when a registration will be cancelled.

The Office proposes to add § 2.166, ''Affidavit of continued use or excusable nonuse combined with renewal application,'' stating that an affidavit or declaration under § 8 of the Act and a renewal application under § 9 of the Act may be combined in a single document.

The Office proposes to revise § 2.167(c) to delete the requirement that an affidavit or declaration under § 15 of the Act (§ 15 affidavit) specify the type of commerce in which the mark is used.

The Office proposes to change the heading of § 2.168 to ''Affidavit or declaration under § 15 combined with affidavit or declaration under § 8, or with renewal application.'' The Office proposes to revise § 2.168(a) to state that a § 15 affidavit may be combined with a § 8 affidavit, if the combined affidavit meets the requirements of both §§ 8 and 15 of the Act. The Office proposes to revise § 2.168(b) to state that a § 15 affidavit can be combined with a renewal application under § 9 of the Act, if the requirements of both §§ 9 and 15 of the Act are met.

The Office proposes to revise § 2.173(a) to simplify the language.

The Office proposes to revise § 2.181 to indicate that renewal of a registration is subject to the provisions of § 8 of the Act. This is consistent with the amendment to § 9(a) of the Act.

The Office proposes to change the heading of § 2.182 to ''Time for filing renewal application,'' and to revise it to state that the renewal application must be filed within one year before the expiration date of the registration, or within the six-month grace period after the expiration date with an additional fee. This changes current practice. Section 9 of the Act now requires filing within six months before the expiration of the registration, or within a three-month grace period thereafter with a late fee.

The Office proposes to change the heading of § 2.183 to ''Requirements for a complete renewal application,'' and to revise it to delete the present renewal requirements and substitute new ones based on amended § 9 of the Act. In particular, the Office proposes to delete the requirements for a specimen and declaration of use or excusable nonuse on or in connection with the goods or services listed in the registration, because these requirements have been removed from § 9 of the Act. The proposed requirements for renewal are: (1) a signed request for renewal; (2) a renewal fee for each class; (3) a grace period surcharge for each class if the renewal application is filed during the grace period; (4) if the registrant is not domiciled in the United States, a designation of a domestic representative; and (5) if the renewal application covers less than all the goods or services, a list of the particular goods or services to be renewed.

The Office proposes to state in § 2.183(f) that if the fee submitted is enough to pay for at least one class, but not enough to pay for all the classes, and the class(es) covered by the renewal application are not specified, the Office will issue a notice requiring either the submission of additional fee(s) or an indication of the class(es) to which the original fee(s) should be applied; that additional fee(s) may be submitted if the requirements of § 2.185 are met; and that if the required fee(s) are not submitted and the class(es) to which the original fee(s) should be applied are not specified, the Office will presume that the fee(s) cover the classes in ascending order, beginning with the lowest numbered class.

The Office proposes to revise and simplify the language of current § 2.184 and to transfer some of its provisions to new § 2.186. The revised provisions state that the Office will issue a notice if the renewal application is not

acceptable; that a response to the refusal of renewal must be filed within six months of the mailing date of the Office action, or before the expiration date of the registration, whichever is later; and that the registration will expire if the renewal application is not filed within the time periods set forth in § 9(a) of the Act.

The Office proposes to add § 2.185, ''Correcting deficiencies in renewal application.'' This section changes current practice. There are now some deficiencies that can be corrected after the statutory deadline for filing the renewal application, such as supplying evidence that the party who filed the application was the owner of the registration on the filing date. Other requirements, such as the renewal fee, must be met before the end of the statutory filing period, or the registration will expire. *In re Culligan International Co.,* 915 F.2d 680, 16 USPQ2d 1234 (Fed. Cir. 1990).

Under amended § 9, the renewal application must be filed within the renewal period or grace period specified in § 9(a) of the Act, or the registration will expire. However, if the renewal application is timely filed, any deficiencies may be corrected after expiration of the statutory filing period, with payment of a deficiency surcharge.

The Office proposes to state in § 2.185(a)(1) that if the renewal application is filed within one year before the registration expires, deficiencies may be corrected before the registration expires without paying a deficiency surcharge, or after the registration expires with payment of the deficiency surcharge required by § 9(a) of the Act.

The Office proposes to state in § 2.185(a)(2) that if the renewal application is filed during the grace period, deficiencies may be corrected before the expiration of the grace period without paying a deficiency surcharge, and after the expiration of the grace period with payment of the deficiency surcharge required by § 9(a) of the Act.

The Office proposes to state in § 2.185(b) that if the renewal application is not filed within the time periods set forth in § 9(a) of the Act, the registration will expire. This deficiency cannot be cured.

Because § 9(a) of the Act specifically requires a deficiency surcharge, the Office proposes to charge the deficiency surcharge for correcting any type of deficiency, even one that could be corrected for no fee under current law.

The Office proposes to add new § 2.186, ''Petition to Commissioner to review refusal of renewal.''

Proposed § 2.186(a) states that a response to the examiner's initial refusal is required before filing a petition to the Commissioner, unless the examiner directs otherwise. This is consistent with the current § 2.184(a).

Proposed § 2.186(b) states that if the examiner maintains the refusal of the renewal application, a petition to the Commissioner to review the action may be filed within six months of the mailing date of the Office action maintaining the refusal; and that if no petition is filed within six months of the mailing date of the Office action, the registration will expire. This is consistent with the current § 2.184(b).

Proposed § 2.186(c) states that a decision by the Commissioner is necessary before filing an appeal or commencing a civil action in any court. This is consistent with the current § 2.184(d).

The Office proposes to amend § 3.16 to state that an applicant may assign an application based on § 1(b) of the Act once the applicant files an amendment to allege use under § 1(c) of the Act.

The Office proposes to change the heading of § 3.24 to ''Requirements for documents and cover sheets relating to patents and patent applications.'' The Office proposes to list the recording requirements for patents in § 3.24, and to add new § 3.25 listing the recording requirements for trademark applications and registrations.

Section 3.25 identifies the types of documents one can submit when recording documents that affect some interest in trademark applications or registrations. The section also identifies the Office's preferred format for cover sheets and other documents.

The Office proposes to revise § 3.28 to state a preference that separate cover sheets be used for patents and trademarks.

The Office proposes to revise § 3.31(a)(4) to set forth the requirements for identifying a trademark application where the application serial number is not known.

The Office proposes to delete the requirement currently in § 3.31(a)(9) that a cover sheet contain a statement that the information on the cover sheet is correct and that any copy of the document submitted is a true copy.

The Office proposes to amend § 3.31(b) to state that a cover sheet ''should'' not refer to both patents and trademarks; and to put the public on notice that if a cover sheet contains both patent and trademark information, all information will become public after recordation.

The Office proposes to add § 3.31(d) to state the Office's preference that a trademark cover sheet include the serial number or registration number of the trademark affected by the conveyance or transaction, an identification of the mark, and a description of the mark.

The Office proposes to add § 3.31(e) to state the Office's preference that the cover sheet include the total number of applications, registrations, or patents identified on the cover sheet and the total fee.

The Office proposes to revise § 6.1 to incorporate classification changes that became effective January 1, 1997, as listed in the International Classification of Goods and Services for the Purposes of the Registration of Marks (7th ed. 1996), published by the World Intellectual Property Organization (WIPO).

Environmental, Energy, and Other Considerations

The Office has determined that the proposed rule changes have no federalism implications affecting the relationship between the National Government and the State as outlined in Executive Order 12612.

The Chief Counsel for Regulation of the Department of Commerce has certified to the Chief Counsel for Advocacy of the Small Business Administration, that the proposed rule changes will not have a significant impact on a substantial number of small entities (Regulatory Flexibility Act, 5 U.S.C. 605(b)). This rule implements the Trademark Law Treaty Implementation Act and simplifies and clarifies procedures for registering trademarks and maintaining and renewing trademark registrations. The rule will not significantly impact any businesses. The principal effect of the rule is to make it easier for applicants to obtain a filing date. No additional requirements are added to maintain registrations. Furthermore, this rule simplifies the procedures for registering trademarks in proposed sections 2.21, 2.32, 2.34, 2.45, 2.76, 2.88, 2.161, 2.167 and 2.183 of the Trademark rules. As a result, an initial regulatory flexibility analysis was not prepared.

The proposed rule changes are in conformity with the requirements of the Regulatory Flexibility Act (5 U.S.C. 601 et seq.), Executive Order 12612, and the Paperwork Reduction Act of 1995 (PRA) (44 U.S.C. 3501 *et seq.*). The proposed changes have been determined to be not significant for purposes of Executive Order 12866.

Notwithstanding any other provision of law, no person is required to nor shall a person be subject to a penalty for failure to comply with a collection of information subject to the requirements

of the PRA unless that collection of information displays a currently valid OMB control number.

This rule contains collections of information requirements subject to the PRA. This rule discusses changes in the information required from the public to obtain registrations for trademarks and service marks, to submit affidavits or declarations of continued use or excusable nonuse, statements of use, requests for extensions of time to file statements of use, and to renew registrations. This rule proposes to delete requirements to identify the method of use of a mark and the type of commerce in which a mark is used. Additionally, the rule removes the requirement that requests for recordation of documents be accompanied by originals or true copies of these documents. The rule proposes to allow for the filing of powers of attorney that pertain to multiple registrations or applications for registration, and proposes certain requirements for filing such powers of attorney. Additionally, the rule proposes requirements for submitting § 8 affidavits of continued use or excusable nonuse combined with § 9 renewal applications, or § 15 affidavits or declarations of incontestability combined with either § 8 affidavits or declarations or with § 9 renewal applications.

An information collection package supporting the changes to the above information requirements, as discussed in this rule, has been submitted to OMB for review and approval. The public reporting burden for this collection of information is estimated to average as follows: seventeen minutes for applications to obtain registrations based on an intent to use the mark under § 1(b) of the Act, if completed using paper forms; fifteen minutes for applications to obtain registrations based on an intent to use the mark under § 1(b) of the Act, if completed using an electronic form; twenty-three minutes for applications to obtain registrations based on use of the mark under § 1(a) of the Act, if completed using paper forms; twenty-one minutes for applications to obtain registrations based on use of the mark under § 1(a) of the Act, if completed using an electronic form; twenty minutes for applications to obtain registrations based on an earlier-filed foreign application under § 44(d) of the Act, if completed using paper forms; nineteen minutes for applications to obtain registrations based on an earlier-filed foreign application under § 44(d) of the Act, if completed using an electronic form; twenty minutes for applications to obtain registrations based on registration of a mark in a foreign applicant's country of origin under § 44(e) of the Act; thirteen minutes for allegations of use of the mark under §§ 2.76 and 2.88; ten minutes for requests for extension of time to file statements of use under § 2.89; fourteen minutes for renewal applications under § 9 of the Act combined with affidavits or declarations of continued use or excusable nonuse under § 8 of the Act; fourteen minutes for combined affidavits/declarations of use and incontestability under §§ 8 and 15 of the Act; eleven minutes for an affidavit or declaration of continued use or excusable nonuse under § 8 of the Act; eleven minutes for a renewal application under § 9 of the Act; eleven minutes for a declaration of incontestability under § 15 of the Act; three minutes for powers of attorney and designations of domestic representatives; and thirty minutes for a trademark recordation form cover sheet. These time estimates include the time for reviewing instructions, searching existing data sources, gathering and maintaining the data needed, and completing and reviewing the collection of information. Comments are invited on: (1) whether the collection of information is necessary for proper performance of the functions of the agency; (2) the accuracy of the agency's estimate of the burden; (3) ways to enhance the quality, utility, and clarity of the information to be collected; and (4) ways to minimize the burden of the collection of information to respondents.

This rule also involves information requirements associated with amendments, oppositions, and petitions to cancel. The amendments and the oppositions have been previously approved by OMB under control number 0651–0009. The petitions to cancel have been previously approved by OMB under control number 0651–0040. These requirements are not being resubmitted for review at this time. Send comments regarding this burden estimate, or any other aspect of this data collection, including suggestions for reducing the burden, to the Assistant Commissioner for Trademarks, 2900 Crystal Drive, Arlington, VA 22202–3513 (Attn: Ari Leifman), and to the Office of Information and Regulatory Affairs, OMB, 725 17th Street, N.W., Washington, D.C. 20230 (Attn: PTO Desk Officer).

Proposed §§ 2.21, 2.32, 2.34, 2.45, 2.76, 2.88, 2.161, 2.167, and 2.183 may lessen the public reporting burden.

An application to obtain a registration can only be accepted for review if a respondent provides certain required minimum elements; otherwise, the Office will return the application to the respondent. Proposed § 2.21 lessens the number of these required minimum elements. Therefore, the number of applications returned to respondents may decline, and this may result in fewer multiple submissions of applications to obtain registrations from single respondents.

An application to obtain registration must identify at least one legal basis for filing the application. Currently, two of these bases, use of the mark and a bona fide intention to use the mark, may not be identified in a single application. Proposed § 2.34 allows a respondent to assert each of these bases with respect to different goods or services in a single application. This may allow some applicants to submit a single application rather than multiple applications.

Currently, applicants must describe the manner in which the mark is used or intended to be used in applications for registration of trademarks and service marks, in applications for registration of collective membership marks, in applications for registration of certification marks, in amendments to allege use of a mark, and in statements of use. Proposed § 2.32 removes this requirement with respect to applications for registration of trademarks, service marks and collective membership marks; proposed § 2.45 removes this requirement with respect to applications to register certification marks; proposed § 2.76 removes this requirement with respect to amendments to allege use; and proposed § 2.88 removes this requirement with respect to statements of use. The Office estimates that the removal of this requirement may reduce the time needed to complete each of these submissions by two minutes.

Currently, the type of commerce in which a mark is used must be specified in affidavits or declarations of continued use or excusable nonuse, in applications for renewal, and in declarations of incontestability. Proposed § 2.161 eliminates this requirement with respect to declarations of continued use; proposed § 2.167 eliminates this requirement with respect to declarations of incontestability; and proposed § 2.183 eliminates this requirement with respect to applications for renewal. The Office estimates that the removal of this requirement may reduce the time needed to complete each of these submissions by one minute.

List of Subjects

37 CFR Part 1

Administrative practice and procedure, Patents.

37 CFR Part 2

Administrative practice and procedure, Courts, Lawyers, Trademarks.

37 CFR Part 3

Administrative practice and procedure, Patents, Trademarks.

37 CFR Part 6

Trademarks.

For the reasons given in the preamble and under the authority contained in 35 U.S.C. 6 and 15 U.S.C. 41, as amended, the Patent and Trademark Office proposes to amend parts 1, 2, 3, and 6 of title 37 as follows:

PART 1—RULES OF PRACTICE IN PATENT CASES

1. The authority citation for part 1 continues to read as follows:

Authority: 35 U.S.C. 6, unless otherwise noted.

1a. Amend § 1.1 by revising paragraph (a)(2) to read as follows:

§ 1.1 Addresses for correspondence with the Patent and Trademark Office.

(a) * * *

(2) *Trademark correspondence.*

(i) Send all trademark filings and correspondence, except as specified below or unless submitting electronically, to: Assistant Commissioner for Trademarks, 2900 Crystal Drive, Arlington, Virginia 22202–3513.

(ii) Send trademark-related documents for the Assignment Division to record to: Commissioner of Patents and Trademarks, Box Assignment, Washington, D.C. 20231.

(iii) Send requests for certified or uncertified copies of trademark applications and registrations, other than coupon orders for uncertified copies of registrations, to: Commissioner of Patents and Trademarks, Box 10, Washington, D.C. 20231.

(iv) Send requests for coupon orders for uncertified copies of registrations to: Commissioner of Patents and Trademarks, Box 9, Washington, D.C. 20231.

(v) An applicant may transmit an application for trademark registration electronically, but only if the applicant uses the Patent and Trademark Office's electronic form.

* * * * *

2. Amend § 1.4 by revising the last sentence of paragraph (a)(2), revising paragraphs (d)(1) and (d)(1)(ii), and adding a new paragraph (d)(1)(iii) to read as follows:

§ 1.4 Nature of correspondence and signature requirements.

(a) * * *

(2) * * * See particularly the rules relating to the filing, processing, or other proceedings of national applications in subpart B, §§ 1.31 to 1.378; of international applications in subpart C, §§ 1.401 to 1.499; of reexamination of patents in subpart D, §§ 1.501 to 1.570; of interferences in subpart E, §§ 1.601 to 1.690; of extension of patent term in subpart F, §§ 1.710 to 1.785; and of trademark applications and registrations, §§ 2.11 to 2.186.

* * * * *

(d)(1) Each piece of correspondence, except as provided in paragraphs (e) and (f) of this section, filed in a patent or trademark application, reexamination proceeding, patent or trademark interference proceeding, patent file or trademark registration file, trademark opposition proceeding, trademark cancellation proceeding, or trademark concurrent use proceeding, which requires a person's signature, must:

(i) * * *

(ii) Be a direct or indirect copy, such as a photocopy or facsimile transmission(§ 1.6(d)), of an original. In the event that a copy of the original is filed, the original should be retained as evidence of authenticity. If a question of authenticity arises, the Office may require submission of the original; or

(iii) Where an electronically transmitted trademark filing is permitted, the person who signs the filing must either:

(A) Place a symbol comprised of numbers and/or letters between two forward slash marks in the signature block on the electronic submission; and print, sign and date in permanent ink, and maintain a paper copy of the electronic submission. Additionally, the person who signs the filing must maintain a verified statement confirming that the signatory has adopted the symbol shown in the signature block to verify the contents of the filing, and that the information in the electronic submission is identical to the information in the paper copy of the submission. This verified statement should not be submitted; or

(B) Sign the verified statement using some other form of electronic signature specified by the Commissioner.

* * * * *

3. Amend § 1.5 by revising paragraph (c) to read as follows:

§ 1.5 Identification of application, patent or registration.

* * * * *

(c)(1) A letter about a trademark application should identify the serial number, the name of the applicant, and the mark.

(2) A letter about a registered trademark should identify the registration number, the name of the registrant, and the mark.

* * * * *

4. Amend § 1.6 by revising paragraph (a)(1), and adding new paragraph (a)(4), to read as follows:

§ 1.6 Receipt of correspondence.

(a) * * *

(1) The Patent and Trademark Office is not open for the filing of correspondence on any day that is a Saturday, Sunday, or Federal holiday within the District of Columbia. Except for correspondence transmitted by facsimile under paragraph (a)(3), or filed electronically under paragraph (a)(4) of this section, no correspondence is received in the Office on Saturdays, Sundays, or Federal holidays within the District of Columbia.

* * * * *

(4) Trademark-related correspondence transmitted electronically will be stamped with the date on which the Office receives the transmission.

* * * * *

5. Revise § 1.23 to read as follows:

§ 1.23 Method of payment.

All payments of money required for Patent and Trademark Office fees, including fees for the processing of international applications (§ 1.445), shall be made in U.S. dollars and in the form of cashier's checks, Treasury notes, post office money orders, or by certified check. If sent in any other form, the Office may delay or cancel the credit until collection is made. Payments for USPTO electronic applications and other electronic submissions authorized by the USPTO may be made by credit card identified on the electronic form. Money orders and checks must be made payable to the Commissioner of Patents and Trademarks. Remittances from foreign countries must be payable and immediately negotiable in the United States for the full amount of the fee required. Money sent by mail to the Office will be at the risk of the sender; letters containing currency should be registered.

PART 2—RULES APPLICABLE TO TRADEMARK CASES

6. The authority citation for part 2 continues to read as follow:

Authority: 15 U.S.C. 1123; 35 U.S.C. 6, unless otherwise noted.

6a. Revise § 2.1 to read as follows:

§ 2.1 Sections of part 1 applicable.

Sections 1.1 to 1.26 of this chapter apply to trademark cases, except those parts that specifically refer to patents, and except § 1.22 to the extent that it is inconsistent with §§ 2.85(e), 2.101(d), 2.111(c), 2.164, or 2.185. Other sections of part 1 incorporated by reference in part 2 also apply to trademark cases.

7. Section 2.6 is amended by revising the introductory text, paragraphs (a)(5), (a)(6), (a)(12), (a)(13), (a)(14), (a)(19), (a)(20), and (a)(21) to read as follows:

§ 2.6 Trademark fees.

The Patent and Trademark Office requires the following fees and charges:

(a) * * *

(5) For filing an application for renewal of a registration, per class	$200.00
(6) Additional fee for filing a renewal application during the grace period, per class	100.00
* * * * * * *	
(12) For filing an affidavit under section 8 of the Act, per class	200.00
(13) For filing an affidavit under section 15 of the Act, per class	200.00
(14) Additional fee for filing a section 8 affidavit during the grace period, per class	100.00
* * * * * * *	
(19) For filing a request to divide an application, per new application (file wrapper) created	300.00
(20) For correcting a deficiency in a section 8 affidavit	100.00
(21) For correcting a deficiency in a renewal application	100.00

8. Amend § 2.17 by adding paragraphs (c) and (d) to read as follows:

§ 2.17 Recognition for representation.

* * * * *

(c) To be recognized as a representative, an attorney as defined in § 10.1(c) of this chapter may file a power of attorney, appear in person, or sign a paper on behalf of an applicant or registrant that is filed with the Office in a trademark case.

(d) A party may file a power of attorney that relates to more than one trademark application or registration, or to all existing and future applications and registrations of that party. A party relying on a power of attorney concerning more than one application or registration must:

(1) Include a copy of the previously filed power of attorney; or

(2) Refer to the power of attorney, specifying the filing date of the previously filed power of attorney; the application serial number (if known), registration number, or *inter partes* proceeding number for which the original power of attorney was filed; and the name of the party who signed the power of attorney; or, if the application serial number is not known, submit a copy of the application or a copy of the mark, and specify the filing date.

9. Revise § 2.20 to read as follows:

§ 2.20 Declarations in lieu of oaths.

Instead of an oath, affidavit, verification, or sworn statement, the following language may be used:

I declare pursuant to the provisions of 18 U.S.C. 1001 and under the penalty of perjury that all statements made of my own knowledge are true and that all statements made on information and belief are believed to be true. I understand that willful false statements and the like are punishable by fine or imprisonment, or both, and may jeopardize the validity of the application or document or any registration resulting therefrom.

10. Revise § 2.21 to read as follows:

§ 2.21 Requirements for receiving a filing date.

(a) The Office will grant a filing date to an application that contains all of the following:

(1) The name of the applicant;

(2) A name and address for correspondence;

(3) A clear drawing of the mark;

(4) A listing of the goods or services; and

(5) The filing fee for at least one class of goods or services, required by § 2.6.

(b) If the applicant does not submit all the elements required in paragraph (a), the Office may return the papers with an explanation of why the filing date was denied.

(c) The applicant may correct and resubmit the application papers. If the resubmitted papers and fee meet all the requirements of paragraph (a) of this section, the Office will grant a filing date as of the date the Office receives the corrected papers.

§ 2.31 [Reserved]

11. Remove and reserve § 2.31.

12. Revise § 2.32 to read as follows:

§ 2.32 Requirements for written application.

(a) The application must be in English and include the following:

(1) A request for registration;

(2) The name of the applicant(s);

(3)(i) The citizenship of the applicant(s); or

(ii) If the applicant is a corporation, association, partnership or other juristic person, the state or nation under the laws of which the applicant is organized; and

(iii) If the applicant is a partnership, the names and citizenship of the general partners;

(4) The address of the applicant;

(5) One or more bases, as required by § 2.34(a);

(6) A list of the particular goods or services on or in connection with which the applicant uses or intends to use the mark. In a United States application filed under section 44 of the Act, the scope of the goods or services covered by the section 44 basis may not exceed the scope of the goods or services in the foreign application or registration; and

(7) The international class of goods or services, if known. See § 6.1 of this chapter for a list of the international classes of goods and services.

(b) The application must include a verified statement that meets the requirements of § 2.33.

(c) For the requirements for a multiple class application, see § 2.86.

13. Revise § 2.33 to read as follows:

§ 2.33 Verified statement.

(a) The application must include a statement that is signed and verified (sworn to) or supported by a declaration under § 2.20 by a person properly authorized to sign on behalf of the applicant. A person who is properly authorized to sign on behalf of the applicant includes a person with legal authority to bind the applicant and/or a person with firsthand knowledge and actual or implied authority to act on behalf of the applicant.

(b)(1) In an application under section 1(a) of the Act, the verified statement must allege:

That the applicant has adopted and is using the mark shown in the accompanying drawing; that the applicant believes it is the owner of the mark; that the mark is in use in commerce, specifying the type of commerce; that to the best of the declarant's knowledge and belief, no other person has

the right to use the mark in commerce, either in the identical form or in such near resemblance as to be likely, when applied to the goods or services of the other person, to cause confusion or mistake, or to deceive; that the specimen shows the mark as used on or in connection with the goods or services; and that the facts set forth in the application are true.

(2) In an application under section 1(b) or section 44 of the Act, the verified statement must allege:

That the applicant has a bona fide intention to use the mark shown in the accompanying drawing in commerce on or in connection with the specified goods or services; that the applicant believes it is entitled to use the mark; that to the best of the declarant's knowledge and belief, no other person has the right to use the mark in commerce, either in the identical form or in such near resemblance as to be likely, when applied to the goods or services of the other person, to cause confusion or mistake, or to deceive; and that the facts set forth in the application are true.

(c) If the verified statement is not filed within a reasonable time after it is signed, the Office may require the applicant to submit a substitute verification or declaration under § 2.20 of the applicant's continued use or bona fide intention to use the mark in commerce.

(d) Where an electronically transmitted filing is permitted, the person who signs the verified statement must either:

(1) Place a symbol comprised of numbers and/or letters between two forward slash marks in the signature block on the electronic submission; and print, sign and date in permanent ink, and maintain a paper copy of the electronic submission. Additionally, the applicant must maintain a verified statement confirming that the signatory has adopted the symbol shown in the signature block to verify the contents of the document, and that the information in the electronic submission is identical to the information in the paper copy of the submission. The applicant should not submit this verified statement; or

(2) Sign the verified statement using some other form of electronic signature specified by the Commissioner.

14. Add § 2.34 to read as follows:

§ 2.34 Bases for filing.

(a) The application must include one or more of the following four filing bases:

(1) *Use in commerce under section 1(a) of the Act.* The requirements for an application based on section 1(a) of the Act are:

(i) The trademark owner's verified statement that the mark is in use in commerce on or in connection with the goods or services listed in the application. If the verification is not filed with the initial application, the verified statement must allege that the mark was in use in commerce on or in connection with the goods or services listed in the application as of the application filing date;

(ii) The date of the applicant's first use of the mark anywhere on or in connection with the goods or services;

(iii) The date of the applicant's first use of the mark in commerce as a trademark or service mark, specifying the type of commerce; and

(iv) One specimen showing how the applicant actually uses the mark in commerce.

(v) An application may list more than one item of goods, or more than one service, provided the applicant has used the mark on or in connection with all the specified goods or services. The dates of use required by paragraphs (ii) and (iii) of this section may be for only one of the items specified.

(2) *Intent-to-use under section 1(b) of the Act.*

(i) In an application under section 1(b) of the Act, the trademark owner must verify that it has a bona fide intention to use the mark in commerce on or in connection with the goods or services listed in the application. If the verification is not filed with the initial application, the verified statement must allege that the applicant had a bona fide intention to use the mark in commerce as of the filing date of the application.

(ii) The application may list more than one item of goods, or more than one service, provided the applicant has a bona fide intention to use the mark in commerce on or in connection with all the specified goods or services.

(3) *Registration of a mark in a foreign applicant's country of origin under section 44(e) of the Act.* The requirements for an application under section 44(e) of the Act are:

(i) The trademark owner's verified statement that it has a bona fide intention to use the mark in commerce on or in connection with the goods or services listed in the application. If the verification is not filed with the initial application, the verified statement must allege that the applicant had a bona fide intention to use the mark in commerce as of the filing date of the application.

(ii) A certification or certified copy of a registration in the applicant's country of origin showing that the mark has been registered in that country, and that the registration is in full force and effect. The certification or certified copy must show the name of the owner, the mark, and the goods or services for which the mark is registered. If the certification or certified copy is not in the English language, the applicant must submit a translation.

(iii) If the record indicates that the foreign registration will expire before the United States registration will issue, the applicant must submit a certification or certified copy from the country of origin to establish that the registration has been renewed and will be in force at the time the United States registration will issue. If the certification or certified copy is not in the English language, the applicant must submit a translation.

(iv) The application may list more than one item of goods, or more than one service, provided the applicant has a bona fide intention to use the mark in commerce on or in connection with all the specified goods or services.

(4) *Claim of priority, based upon an earlier-filed foreign application, under section 44(d) of the Act.* The requirements for an application under section 44(d) of the Act are:

(i) A claim of priority, filed within six months of the filing date of the foreign application. Before publication or registration on the Supplemental Register, the applicant must either:

(A) Specify the filing date and country of the first regularly filed foreign application; or

(B) State that the application is based upon a subsequent regularly filed application in the same foreign country, and that any prior-filed application has been withdrawn, abandoned or otherwise disposed of, without having been laid open to public inspection and without having any rights outstanding, and has not served as a basis for claiming a right of priority.

(ii) Include the trademark owner's verified statement that it has a bona fide intention to use the mark in commerce on or in connection with the goods or services listed in the application. If the verification is not filed with the initial application, the verified statement must allege that the applicant had a bona fide intention to use the mark in commerce as of the filing date of the application.

(iii) Before the application can be approved for publication, or for registration on the Supplemental Register, the applicant must establish a basis under section 1(a), section 1(b) or section 44(e) of the Act.

(iv) The application may list more than one item of goods, or more than one service, provided the applicant has a bona fide intention to use the mark in commerce on or in connection with all the specified goods or services.

(b)(1) The applicant may claim more than one basis, provided that the applicant satisfies all requirements for the bases claimed. However, the

applicant may not claim both sections 1(a) and 1(b) for the identical goods or services in the same application.

(2) If the applicant claims more than one basis, the applicant must list each basis, followed by the goods or services to which that basis applies. If some or all of the goods or services are covered by more than one basis, this must be stated.

(c) The word ''commerce'' means commerce that Congress may lawfully regulate, as specified in section 45 of the Act.

§ 2.37 [Removed]

15. Remove § 2.37.

§ 2.35 [Redesignated as § 2.37]

16. Redesignate § 2.35 as § 2.37.

17. Add new § 2.35 to read as follows:

§ 2.35 Adding, deleting, or substituting bases.

(a) Before publication, the applicant may add or substitute a basis, if the applicant meets all requirements for the new basis, as stated in § 2.34. The applicant may delete a basis at any time.

(b) An applicant may not amend an application to add or substitute a basis after the mark has been published for opposition. The applicant may delete a basis after publication.

(c) When the applicant substitutes a basis, the Office will presume that the original basis was valid and the application will retain the original filing date, unless there is contradictory evidence in the record.

(d) If an applicant properly claims a section 44(d) basis in addition to another basis, the applicant will retain the priority filing date under section 44(d) no matter which basis the applicant perfects.

(e) The applicant may add or substitute a section 44(d) basis only within the six-month priority period following the filing date of the foreign application.

(f) When the applicant adds or substitutes a basis, the applicant must list each basis, followed by the goods or services to which that basis applies.

(g) When the applicant deletes a basis, the applicant must also delete any goods or services covered solely by the deleted basis.

(h) Once an applicant claims a section 1(b) basis as to any or all of the goods or services, the applicant may not amend the application to seek registration under section 1(a) of the Act for those goods or services unless the applicant files an allegation of use under section 1(c) or section 1(d) of the Act.

18. Amend § 2.38 by revising paragraph (a) to read as follows:

§ 2.38 Use by predecessor or by related companies.

(a) If the first use of the mark was by a predecessor in title or by a related company (sections 5 and 45 of the Act), and the use inures to the benefit of the applicant, the dates of first use (§§ 2.34(a)(1)(ii) and (iii)) may be asserted with a statement that first use was by the predecessor in title or by the related company, as appropriate.

* * * * *

§ 2.39 [Removed]

19. Remove and reserve § 2.39.

20. Revise § 2.45 to read as follows:

§ 2.45 Certification mark.

(a) In an application to register a certification mark under section 1(a) of the Act, the application shall include all applicable elements required by the preceding sections for trademarks. In addition, the application must: specify the conditions under which the certification mark is used; allege that the applicant exercises legitimate control over the use of the mark; allege that the applicant is not engaged in the production or marketing of the goods or services to which the mark is applied; and include a copy of the standards that determine whether others may use the certification mark on their goods and/or in connection with their services.

(b) In an application to register a certification mark under section 1(b) or section 44 of the Act, the application shall include all applicable elements required by the preceding sections for trademarks. In addition, the application must: specify the conditions under which the certification mark is intended to be used; allege that the applicant intends to exercise legitimate control over the use of the mark; and allege that the applicant will not engage in the production or marketing of the goods or services to which the mark is applied. When the applicant files an amendment to allege use under section 1(c) of the Act, or a statement of use under section 1(d) of the Act, the applicant must submit a copy of the standards that determine whether others may use the certification mark on their goods and/or in connection with their services.

§ 2.51 [Amended]

21. In § 2.51, remove paragraphs (c), (d) and (e).

22. Revise § 2.52 to read as follows:

§ 2.52 Types of drawings and format for drawings.

(a) A drawing depicts the mark sought to be registered. The drawing must show only one mark. The applicant must include a clear drawing of the mark when the application is filed. There are two types of drawings:

(1) *Typed drawing.* The drawing may be typed if the mark consists only of words, letters, numbers, common forms of punctuation, or any combination of these elements. In a typed drawing, every word or letter must be typed in uppercase type. If the applicant submits a typed drawing, the application is not limited to the mark depicted in any special form or lettering.

(2) *Special form drawing.* A special form drawing is required if the mark has a two or three-dimensional design; or color; or words, letters, or numbers in a particular style of lettering; or unusual forms of punctuation.

(i) Special form drawings must be made with a pen or by a process that will provide high definition when copied. A photolithographic, printer's proof copy, or other high quality reproduction of the mark may be used. Every line and letter, including color lining and lines used for shading, must be black. All lines must be clean, sharp, and solid, and must not be fine or crowded. Gray tones or tints may not be used for surface shading or any other purpose.

(ii) If necessary to adequately depict the commercial impression of the mark, the applicant may be required to submit a drawing that shows the placement of the mark by surrounding the mark with a proportionately accurate broken-line representation of the particular goods, packaging, or advertising on which the mark appears. The applicant must also use broken lines to show any other matter not claimed as part of the mark. For any drawing using broken lines to indicate placement of the mark, or matter not claimed as part of the mark, the applicant must include in the body of the application a written description of the mark and explain the purpose of the broken lines.

(iii) If the mark has three-dimensional features, the applicant must submit a drawing that depicts a single rendition of the mark, and the applicant must include a description of the mark indicating that the mark is three-dimensional.

(iv) If the mark has motion, the applicant may submit a drawing that depicts a single point in the movement, or the applicant may submit a square drawing that contains up to four freeze frames showing various points in the movement, whichever best depicts the commercial impression of the mark. The applicant must also submit a written description of the mark.

(v) If the mark has color, the applicant may claim that all or part of the mark consists of one or more colors. To claim

color, the applicant must submit a statement explaining where the color or colors appear in the mark and the nature of the color(s).

(vi) If a drawing cannot adequately depict all significant features of the mark, the applicant must also submit a written description of the mark.

(3) *Sound, scent, and non-visual marks.* The applicant is not required to submit a drawing if the applicant's mark consists only of a sound, a scent, or other completely non-visual matter. For these types of marks, the applicant must submit a detailed written description of the mark.

(b) *Recommended Format for special form drawings*—(1) *Type of paper and ink.* The drawing should be on a piece of non-shiny, white paper that is separate from the application. Black ink should be used to depict the mark.

(2) *Size of paper and size of mark.* The drawing should be on paper that is 8 to 8½ inches (20.3 to 21.6 cm.) wide and 11 to 11.69 inches (27.9 to 29.7 cm.) long. One of the shorter sides of the sheet should be regarded as its top edge. The drawing should be between 2.5 inches (6.1 cm.) and 4 inches (10.3 cm.) high and/or wide. There should be at least a 1 inch (2.5 cm.) margin between the drawing and the edges of the paper, and at least a 1 inch (2.5 cm.) margin between the drawing and the heading.

(3) *Heading.* Across the top of the drawing, beginning one inch (2.5 cm.) from the top edge, the applicant should type the following: applicant's name; applicant's address; the goods or services recited in the application, or a typical item of the goods or services if numerous items are recited in the application; the date of first use of the mark and first use of the mark in commerce in an application under section 1(a) of the Act; the priority filing date of the relevant foreign application in an application claiming the benefit of a prior foreign application under section 44(d) of the Act. If the information in the heading is lengthy, the heading may continue onto a second page, but the mark should be depicted on the first page.

(c) *Drawings in electronically transmitted applications.* For an electronically transmitted application, if the drawing is in special form, the applicant must attach a digitized image of the mark to the electronic submission.

23. Revise § 2.56 to read as follows:

§ 2.56 Specimens.

(a) An application under section 1(a) of the Act, an amendment to allege use under § 2.76, and a statement of use under § 2.88 must each include one specimen showing the mark as used on or in connection with the goods, or in the sale or advertising of the services in commerce.

(b)(1) A trademark specimen is a label, tag, or container for the goods, or a display associated with the goods. The Office may accept another document related to the goods or the sale of the goods when it is not possible to place the mark on the goods or packaging for the goods.

(2) A service mark specimen must show the mark as actually used in the sale or advertising of the services.

(3) A collective trademark or collective service mark specimen must show how a member uses the mark on the member's goods or in the sale or advertising of the member's services.

(4) A collective membership mark specimen must show use by members to indicate membership in the collective organization.

(5) A certification mark specimen must show how a person other than the owner uses the mark to certify regional or other origin, material, mode of manufacture, quality, accuracy, or other characteristics of that person's goods or services; or that members of a union or other organization performed the work or labor on the goods or services.

(c) A photocopy or other reproduction of a specimen of the mark as actually used on or in connection with the goods, or in the sale or advertising of the services, is acceptable. However, a photocopy of the drawing required by § 2.51 is not a proper specimen.

(d)(1) The specimen should be flat, and not larger than 8½ inches (21.6 cm.) wide by 11.69 inches (29.7 cm.) long. If a specimen of this size is not available, the applicant may substitute a suitable photograph or other facsimile.

(2) If the applicant files a specimen exceeding these size requirements (a ''bulky specimen''), the Office will create a facsimile of the specimen that meets the requirements of the rule (i.e., is flat and no larger than 8½ inches (21.6 cm.) wide by 11.69 inches (29.7 cm.) long) and put it in the file wrapper.

(3) In the absence of non-bulky alternatives, the Office may accept an audio or video cassette tape recording, CD–ROM, or other appropriate medium.

(4) For an electronically transmitted application, or other electronic submission, the specimen must be submitted as a digitized image.

§ 2.57 [Removed]

24. Remove and reserve § 2.57.

§ 2.58 [Removed]

25. Remove and reserve § 2.58.

26. Revise § 2.59 to read as follows:

§ 2.59 Filing substitute specimen(s).

(a) In an application under section 1(a) of the Act, the applicant may submit substitute specimens of the mark as used on or in connection with the goods, or in the sale or advertising of the services. The applicant must verify by an affidavit or declaration under § 2.20 that the substitute specimens were in use in commerce at least as early as the filing date of the application. Verification is not required if the specimen is a duplicate or facsimile of a specimen already of record in the application.

(b) In an application under section 1(b) of the Act, after filing either an amendment to allege use under § 2.76 or a statement of use under § 2.88, the applicant may submit substitute specimens of the mark as used on or in connection with the goods, or in the sale or advertising of the services. If the applicant submits substitute specimen(s), the applicant must:

(1) For an amendment to allege use under § 2.76, verify by affidavit or declaration under § 2.20 that the applicant used the substitute specimen(s) in commerce prior to filing the amendment to allege use.

(2) For a statement of use under § 2.88, verify by affidavit or declaration under § 2.20 that the applicant used the substitute specimen(s) in commerce either prior to filing the statement of use or prior to the expiration of the deadline for filing the statement of use.

27. Revise § 2.66 to read as follows:

§ 2.66 Revival of abandoned applications.

(a) The applicant may file a petition to revive an application abandoned because the applicant did not timely respond to an Office action or notice of allowance. The applicant must file the petition:

(1) Within two months of the mailing date of the notice of abandonment; or

(2) Within two months of actual knowledge of the abandonment, if the applicant did not receive the notice of abandonment, and the applicant was diligent in checking the status of the application.

(b) The requirements for filing a petition to revive an application abandoned because the applicant did not timely respond to an Office action are:

(1) The petition fee required by § 2.6;

(2) A statement, signed by someone with firsthand knowledge of the facts, that the delay in filing the response on or before the due date was unintentional; and

(3) Unless the applicant alleges that it did not receive the Office action, the proposed response.

(c) The requirements for filing a petition to revive an application abandoned because the applicant did not timely respond to a notice of allowance are:

(1) The petition fee required by § 2.6;

(2) A statement, signed by someone with firsthand knowledge of the facts, that the delay in filing the statement of use (or request for extension of time to file a statement of use) on or before the due date was unintentional;

(3) Unless the applicant alleges that it did not receive the notice of allowance and requests cancellation of the notice of allowance, the required fees for the number of requests for extensions of time to file a statement of use that the applicant should have filed under § 2.89 if the application had never been abandoned;

(4) Unless the applicant alleges that it did not receive the notice of allowance and requests cancellation of the notice of allowance, either a statement of use under § 2.88 or a request for an extension of time to file a statement of use under § 2.89; and

(5) Unless a statement of use is filed with or before the petition, or the applicant alleges that it did not receive the notice of allowance and requests cancellation of the notice of allowance, the applicant must file any further requests for extensions of time to file a statement of use under § 2.89 that become due while the petition is pending, or file a statement of use under § 2.88.

(d) In an application under section 1(b) of the Act, the Commissioner will not grant the petition if this would permit the filing of a statement of use more than 36 months after the mailing date of the notice of allowance under section 13(b)(2) of the Act.

(e) The Commissioner will grant the petition to revive if the applicant complies with the requirements listed above and establishes that the delay in responding was unintentional.

(f) If the Commissioner denies a petition, the applicant may request reconsideration, if the applicant:

(1) Files the request within two months of the mailing date of the decision denying the petition; and

(2) Pays a second petition fee under § 2.6.

28. Revise § 2.71 to read as follows:

§ 2.71 Amendments to correct informalities.

The applicant may amend the application during the course of examination, when required by the Office or for other reasons.

(a) The applicant may amend the application to clarify or limit, but not to broaden, the identification of goods and/or services.

(b)(1) If the declaration or verification of an application under § 2.33 is unsigned or signed by the wrong party, the applicant may submit a substitute verification or declaration under § 2.20.

(2) If the declaration or verification of a statement of use under § 2.88, or a request for extension of time to file a statement of use under § 2.89, is unsigned or signed by the wrong party, the applicant must submit a substitute verification before the expiration of the statutory deadline for filing the statement of use.

(c) The applicant may amend the dates of use, provided that the applicant supports the amendment with an affidavit or declaration under § 2.20, except that the following amendments are not permitted:

(1) In an application under section 1(a) of the Act, the applicant may not amend the application to specify a date of use that is subsequent to the filing date of the application;

(2) In an application under section 1(b) of the Act, after filing a statement of use under § 2.88, the applicant may not amend the statement of use to specify a date of use that is subsequent to the expiration of the deadline for filing the statement of use.

(d) The applicant may amend the application to correct the name of the applicant, if there is a mistake in the manner in which the name of the applicant is set out in the application. The amendment must be supported by an affidavit or declaration under § 2.20, signed by the applicant. However, the application cannot be amended to set forth a different entity as the applicant. An application filed in the name of an entity that did not own the mark as of the filing date of the application is void.

29. Revise § 2.72 to read as follows:

§ 2.72 Amendments to description or drawing of the mark.

(a) In an application based on use in commerce under section 1(a) of the Act, the applicant may amend the description or drawing of the mark only if:

(1) The specimens originally filed, or substitute specimens filed under § 2.59(a), support the proposed amendment; and

(2) The proposed amendment does not materially alter the mark. The Office will determine whether a proposed amendment materially alters a mark by comparing the proposed amendment with the description or drawing of the mark filed with the original application.

(b) In an application based on a bona fide intention to use a mark in commerce under section 1(b) of the Act, the applicant may amend the description or drawing of the mark only if:

(1) The specimens filed with an amendment to allege use or statement of use, or substitute specimens filed under § 2.59(b), support the proposed amendment; and

(2) The proposed amendment does not materially alter the mark. The Office will determine whether a proposed amendment materially alters a mark by comparing the proposed amendment with the description or drawing of the mark filed with the original application.

(c) In an application based on a claim of priority under section 44(d) of the Act, or on a mark duly registered in the country of origin of the foreign applicant under section 44(e) of the Act, the applicant may amend the description or drawing of the mark only if:

(1) The description or drawing of the mark in the foreign registration certificate supports the amendment; and

(2) The proposed amendment does not materially alter the mark. The Office will determine whether a proposed amendment materially alters a mark by comparing the proposed amendment with the description or drawing of the mark filed with the original application.

30. Amend § 2.76 by revising paragraphs (b), (e)(2), and (e)(3), and adding paragraphs (i) and (j) to read as follows:

§ 2.76 Amendment to allege use.

* * * * *

(b) A complete amendment to allege use must include:

(1) A statement that is signed and verified (sworn to) or supported by a declaration under § 2.20 by a person properly authorized to sign on behalf of the applicant (see § 2.33(a)(2)) that:

(i) The applicant believes it is the owner of the mark; and

(ii) The mark is in use in commerce, specifying the date of the applicant's first use of the mark and first use of the mark in commerce, the type of commerce, and those goods or services specified in the application on or in connection with which the applicant uses the mark in commerce.

(2) One specimen of the mark as actually used in commerce. See § 2.56 for the requirements for specimens; and

(3) The fee per class required by § 2.6.

* * * * *

(e) * * *

(2) One specimen or facsimile of the mark as used in commerce; and

(3) A statement that is signed and verified (sworn to) or supported by a declaration under § 2.20 by a person

properly authorized to sign on behalf of the applicant that the mark is in use in commerce.

* * * * *

(i) If the applicant does not file the amendment to allege use within a reasonable time after it is signed, the Office may require a substitute verification or declaration under § 2.20 stating that the mark is still in use in commerce.

(j) For the requirements for a multiple class application, see § 2.86.

31. Revise § 2.86 to read as follows:

§ 2.86 Application may include multiple classes.

(a) In a single application, an applicant may apply to register the same mark for goods and/or services in multiple classes. The applicant must:

(1) Specifically identify the goods or services in each class;

(2) Submit an application filing fee for each class; and

(3) Include either dates of use (see §§ 2.34(a)(1)(ii) and (iii)) and one specimen for each class, or a statement of a bona fide intention to use the mark in commerce on or in connection with all the goods or services specified in each class. The applicant may not claim both use in commerce and a bona fide intention to use the mark in commerce for the identical goods or services in one application.

(b) An amendment to allege use under § 2.76 or a statement of use under § 2.88 must include, for each class, the required fee, dates of use, and one specimen. The applicant may not file the amendment to allege use or statement of use until the applicant has used the mark on all the goods or services, unless the applicant files a request to divide. See § 2.87 for information regarding requests to divide.

(c) The Office will issue a single certificate of registration for the mark, unless the applicant files a request to divide. See § 2.87 for information regarding requests to divide.

32. Amend § 2.88 by revising paragraphs (b) and (e) and by adding paragraphs (k) and (l) to read as follows:

§ 2.88 Filing statement of use after notice of allowance.

* * * * *

(b) A complete statement of use must include:

(1) A statement that is signed and verified (sworn to) or supported by a declaration under § 2.20 by a person properly authorized to sign on behalf of the applicant (see § 2.33(a)(2)) that:

(i) The applicant believes it is the owner of the mark; and

(ii) The mark is in use in commerce, specifying the date of the applicant's first use of the mark and first use of the mark in commerce, the type of commerce, and those goods or services specified in the notice of allowance on or in connection with which the applicant uses the mark in commerce;

(2) One specimen of the mark as actually used in commerce. See § 2.56 for the requirements for specimens; and

(3) The fee per class required by § 2.6.

* * * * *

(e) The Office will review a timely filed statement of use to determine whether it meets the following minimum requirements:

(1) The fee for at least a single class, required by § 2.6;

(2) One specimen of the mark as used in commerce;

(3) A statement that is signed and verified (sworn to) or supported by a declaration under § 2.20 by a person properly authorized to sign on behalf of the applicant that the mark is in use in commerce. If the verification or declaration is unsigned or signed by the wrong party, the applicant must submit a substitute verification on or before the statutory deadline for filing the statement of use.

* * * * *

(k) If the statement of use is not filed within a reasonable time after the date it is signed, the Office may require a substitute verification or declaration under § 2.20 stating that the mark is still in use in commerce.

(l) For the requirements for a multiple class application, see § 2.86.

33. Amend § 2.89 by revising paragraphs (a), (b), and (d) and by adding paragraph (h) to read as follows:

§ 2.89 Extensions of time for filing a statement of use.

(a) The applicant may request a six-month extension of time to file the statement of use required by § 2.88. The extension request must be filed within six months of the mailing date of the notice of allowance under section 13(b)(2) of the Act and must include the following:

(1) A written request for an extension of time to file the statement of use;

(2) The fee per class required by § 2.6; and

(3) A statement that is signed and verified (sworn to) or supported by a declaration under § 2.20 by a person properly authorized to sign on behalf of the applicant (see § 2.33(a)(2)) that the applicant still has a bona fide intention to use the mark in commerce, specifying the relevant goods or services. If the verification is unsigned or signed by the wrong party, the applicant must submit a substitute verification within six months of the mailing date of the notice of allowance.

(b) Before the expiration of the previously granted extension of time, the applicant may request further six-month extensions of time to file the statement of use by submitting the following:

(1) A written request for an extension of time to file the statement of use;

(2) The fee per class required by § 2.6;

(3) A statement that is signed and verified (sworn to) or supported by a declaration under § 2.20 by a person properly authorized to sign on behalf of the applicant (see § 2.33(a)(2)) that the applicant still has a bona fide intention to use the mark in commerce, specifying the relevant goods or services. If the verification is unsigned or signed by the wrong party, the applicant must submit a substitute verification before the expiration of the previously granted extension; and

(4) A showing of good cause, as specified in paragraph (d) of this section.

* * * * *

(d) The showing of good cause must include a statement of the applicant's ongoing efforts to make use of the mark in commerce on or in connection with each of the relevant goods or services. Those efforts may include product or service research or development, market research, manufacturing activities, promotional activities, steps to acquire distributors, steps to obtain governmental approval, or other similar activities. In the alternative, the applicant must submit a satisfactory explanation for the failure to make efforts to use the mark in commerce.

* * * * *

(h) If the extension request is not filed within a reasonable time after it is signed, the Office may require a substitute verification or declaration under § 2.20 stating that the applicant still has a bona fide intention to use the mark in commerce.

34. Amend § 2.101 by revising paragraph (d)(1) to read as follows:

§ 2.101 Filing an opposition.

* * * * *

(d)(1) The opposition must be accompanied by the required fee for each party joined as opposer for each class in the application for which registration is opposed (see § 2.6). If no fee, or a fee insufficient to pay for one person to oppose the registration of a mark in at least one class, is submitted within thirty days after publication of the mark to be opposed or within an extension of time for filing an

opposition, the opposition will not be refused if the required fee(s) is submitted to the Patent and Trademark Office within the time limit set in the notification of this defect by the Office.

* * * * *

35. Amend § 2.111 by revising paragraph (c)(1) to read as follows:

§ 2.111 Filing petition for cancellation.

* * * * *

(c)(1) The petition must be accompanied by the required fee for each class in the registration for which cancellation is sought (see § 2.6). If the fee submitted is insufficient for a cancellation against all of the classes in the registration, and the particular class or classes against which the cancellation is filed are not specified, the Office will issue a written notice allowing petitioner a set time in which to submit the required fees(s) (provided that the five-year period, if applicable, has not expired) or to specify the class or classes sought to be cancelled. If the required fee(s) is not submitted, or the specification made, within the time set in the notice, the cancellation will be presumed to be against the class or classes in ascending order, beginning with the lowest numbered class, and including the number of classes in the registration for which the fees submitted are sufficient to pay the fee due for each class.

* * * * *

36. Amend § 2.146 by revising paragraph (d) and by adding paragraphs (i) and (j) to read as follows:

§ 2.146 Petitions to the Commissioner.

* * * * *

(d) A petition must be filed within two months of the mailing date of the action from which relief is requested, unless a different deadline is specified elsewhere in this chapter.

* * * * *

(i) Where a petitioner seeks to revive or reinstate an application or registration that was abandoned or cancelled because papers were lost or mishandled by the Office, the Commissioner may deny the petition if the petitioner was not diligent in checking the status of the application or registration.

(j) If the Commissioner denies a petition, the petitioner may request reconsideration, if the petitioner:

(1) Files the request within two months of the mailing date of the decision denying the petition; and

(2) Pays a second petition fee under § 2.6.

37. Revise § 2.151 to read as follows:

§ 2.151 Certificate.

When the Office determines that a mark is registrable, a certificate will be issued stating that the applicant is entitled to registration on the Principal Register or on the Supplemental Register. The certificate will state the date on which the application for registration was filed in the Office, the act under which the mark is registered, the date of issue, and the number of the registration. A reproduction of the mark and pertinent data from the application will be sent with the certificate. A notice of the requirements of section 8 of the Act will accompany the certificate.

38. Revise § 2.155 to read as follows:

§ 2.155 Notice of publication.

The Office will send the registrant a notice of publication of the mark and of the requirement for filing the affidavit or declaration required by section 8 of the Act.

39. Revise § 2.156 to read as follows:

§ 2.156 Not subject to opposition; subject to cancellation.

The published mark is not subject to opposition, but is subject to petitions to cancel as specified in § 2.111 and to cancellation for failure to file the affidavit or declaration required by section 8 of the Act.

40. Add § 2.160 to read as follows:

§ 2.160 Affidavit or declaration of continued use or excusable nonuse required to avoid cancellation of registration.

(a) During the following time periods, the owner of the registration must file an affidavit or declaration of continued use or excusable nonuse, or the registration will be cancelled:

(1)(i) For registrations issued under the Trademark Act of 1946, between the fifth and the sixth year after the date of registration; or

(ii) For registrations issued under prior Acts, between the fifth and the sixth year after the date of publication under section 12(c) of the Act; and

(2) For all registrations, within the year before the end of every ten-year period after the date of registration.

(3) The affidavit or declaration may be filed within a grace period of six months after the end of the deadline set forth in paragraphs (a)(1) and (a)(2), with payment of the grace period surcharge required by section 8(c)(1) of the Act and § 2.6.

(b) For the requirements for the affidavit or declaration, see § 2.161.

41. Revise § 2.161 to read as follows:

§ 2.161 Requirements for a complete affidavit or declaration of continued use or excusable nonuse.

A complete affidavit or declaration under section 8 of the Act must:

(a) Be filed by the owner within the period set forth in section 8 of the Act;

(b) Include a statement that is signed and verified (sworn to) or supported by a declaration under § 2.20 by a person properly authorized to sign on behalf of the owner, attesting to the continued use or excusable nonuse of the mark within the period set forth in section 8 of the Act. A person who is properly authorized to sign on behalf of the owner includes a person with legal authority to bind the owner and/or a person with firsthand knowledge and actual or implied authority to act on behalf of the owner.

(c) Include the registration number;

(d)(1) Include the fee required by § 2.6 for each class of goods or services that the affidavit or declaration covers;

(2) If the affidavit or declaration is filed during the grace period under section 8(c)(1) of the Act, include the late fee per class required by § 2.6;

(3) If at least one fee is submitted for a multi-class registration, but the class(es) to which the fee(s) should be applied are not specified, the Office will issue a notice requiring either the submission of additional fee(s) or an indication of the class(es) to which the original fee(s) should be applied. Additional fee(s) may be submitted if the requirements of § 2.164 are met. If the required fee(s) are not submitted and the class(es) to which the original fee(s) should be applied are not specified, the Office will presume that the fee(s) cover the classes in ascending order, beginning with the lowest numbered class;

(e)(1) Specify the goods or services for which the mark is in use in commerce, and/or the goods or services for which excusable nonuse is claimed under § 2.161(f)(2);

(2) If the affidavit or declaration covers less than all the goods or services, or less than all the classes in the registration, specify the goods or services being deleted from the registration;

(f)(1) State that the registered mark is in use in commerce on or in connection with the goods or services in the registration; or

(2) If the registered mark is not in use in commerce on or in connection with all the goods or services in the registration, set forth the date when use of the mark in commerce stopped and the approximate date when use is expected to resume; and recite facts to show that nonuse as to those goods or

services is due to special circumstances that excuse the nonuse and is not due to an intention to abandon the mark. If the facts recited are found insufficient, further evidence or explanation may be submitted, if the requirements of § 2.164 are met;

(g) Include a specimen showing current use of the mark for each class of goods or services, unless excusable nonuse is claimed under § 2.161(f)(2). The specimen must:

(1) Show the mark as actually used on or in connection with the goods or in the sale or advertising of the services. A photocopy or other reproduction of the specimen showing the mark as actually used is acceptable. However, a photocopy that merely reproduces the registration certificate is not a proper specimen;

(2) Be flat and no larger than 8½ inches (21.6 cm.) wide by 11.69 inches (29.7 cm.) long. If a specimen exceeds these size requirements (a ''bulky specimen''), the Office will create a facsimile of the specimen that meets the requirements of the rule (i.e., is flat and no larger than 8½ inches (21.6 cm.) wide by 11.69 inches (29.7 cm.) long) and put it in the file wrapper;

(h) If the registrant is not domiciled in the United States, the registrant must list the name and address of a United States resident upon whom notices or process in proceedings affecting the registration may be served.

42. Revise § 2.162 to read as follows:

§ 2.162 Notice to registrant.

When a certificate of registration is originally issued, the Office includes a notice of the requirement for filing the affidavit or declaration of use or excusable nonuse under section 8 of the Act. However the affidavit or declaration must be filed within the time period required by section 8 of the Act even if this notice is not received.

43. Revise § 2.163 to read as follows:

§ 2.163 Acknowledgment of receipt of affidavit or declaration.

The Office will issue a notice as to whether an affidavit or declaration is acceptable, or the reasons for refusal.

(a) If the owner of the registration filed the affidavit or declaration within the time periods set forth in section 8 of the Act, deficiencies may be corrected if the requirements of § 2.164 are met.

(b) A response to the refusal must be filed within six months of the mailing date of the Office action, or before the end of the filing period set forth in section 8(a) or section 8(b) of the Act, whichever is later. If no response is filed within this time period, the registration will be cancelled.

44. Add § 2.164 to read as follows:

§ 2.164 Correcting deficiencies in affidavit or declaration.

(a) If the owner of the registration files an affidavit or declaration within the time periods set forth in section 8 of the Act, deficiencies may be corrected, as follows:

(1) *Correcting deficiencies in affidavits or declarations timely filed within the periods set forth in sections 8(a) and 8(b) of the Act.* If the owner timely files the affidavit or declaration within the relevant filing period set forth in section 8(a) or section 8(b) of the Act, deficiencies may be corrected before the end of this filing period without paying a deficiency surcharge. Deficiencies may be corrected after the end of this filing period with payment of the deficiency surcharge required by section 8(c)(2) of the Act and § 2.6.

(2) *Correcting deficiencies in affidavits or declarations filed during the grace period.* If the affidavit or declaration is filed during the six-month grace period provided by section 8(c)(1) of the Act, deficiencies may be corrected before the expiration of the grace period without paying a deficiency surcharge. Deficiencies may be corrected after the expiration of the grace period with payment of the deficiency surcharge required by section 8(c)(2) of the Act and § 2.6.

(b) If the affidavit or declaration is not filed within the time periods set forth in section 8 of the Act, or if it is filed within that period by someone other than the owner, the registration will be cancelled. These deficiencies cannot be cured.

45. Revise § 2.165 to read as follows:

§ 2.165 Petition to Commissioner to review refusal.

(a) A response to the examiner's initial refusal to accept an affidavit or declaration is required before filing a petition to the Commissioner, unless the examiner directs otherwise. See § 2.163(b) for the deadline for responding to an examiner's Office action.

(b) If the examiner maintains the refusal of the affidavit or declaration, a petition to the Commissioner to review the action may be filed. The petition must be filed within six months of the mailing date of the action maintaining the refusal, or the Office will cancel the registration and issue a notice of the cancellation.

(c) A decision by the Commissioner is necessary before filing an appeal or commencing a civil action in any court.

46. Revise § 2.166 to read as follows:

§ 2.166 Affidavit of continued use or excusable nonuse combined with renewal application.

An affidavit or declaration under section 8 of the Act and a renewal application under section 9 of the Act may be combined into a single document, provided that the document meets the requirements of both sections 8 and 9 of the Act.

47. Amend § 2.167 by revising paragraph (c) to read as follows:

§ 2.167 Affidavit or declaration under section 15.

* * * * *

(c) Recite the goods or services stated in the registration on or in connection with which the mark has been in continuous use in commerce for a period of five years after the date of registration or date of publication under section 12(c) of the Act, and is still in use in commerce;

* * * * *

48. Revise § 2.168 to read as follows:

§ 2.168 Affidavit or declaration under section 15 combined with affidavit or declaration under section 8, or with renewal application.

(a) The affidavit or declaration filed under section 15 of the Act may also be used as the affidavit or declaration required by section 8, if the affidavit or declaration meets the requirements of both sections 8 and 15.

(b) The affidavit or declaration filed under section 15 of the Act may be combined with an application for renewal of a registration under section 9 of the Act, if the requirements of both sections 9 and 15 are met.

49. Amend § 2.173 by revising the heading and paragraph (a) to read as follows:

§ 2.173 Amendment of registration.

(a) The registrant may apply to amend the registration or to disclaim part of the mark in the registration. A written request specifying the amendment or disclaimer must be submitted. The request must be signed by the registrant and verified or supported by a declaration under § 2.20, and accompanied by the required fee. If the amendment involves a change in the mark, a new specimen showing the mark as used on or in connection with the goods or services, and a new drawing of the amended mark, must be submitted. The certificate of registration or, if the certificate is lost or destroyed, a certified copy of the certificate, must also be submitted. The registration as amended must still contain registrable matter, and the mark as amended must be registrable as a whole. An amendment or disclaimer must not

materially alter the character of the mark.

* * * * *

50. Amend § 2.181 by revising paragraph (a)(1) to read as follows:

§ 2.181 Term of original registrations and renewals.

(a)(1) Subject to the provisions of section 8 of the Act requiring an affidavit or declaration of continued use or excusable nonuse, registrations issued or renewed under the Act, prior to November 16, 1989, whether on the Principal Register or on the Supplemental Register, remain in force for twenty years from their date of issue or expiration, and may be renewed for periods of ten years from the expiring period unless previously cancelled or surrendered.

* * * * *

51. Revise § 2.182 to read as follows:

§ 2.182 Time for filing renewal application.

An application for renewal must be filed within one year before the expiration date of the registration, or within the six-month grace period after the expiration date of the registration. If no renewal application is filed within this period, the registration will expire.

52. Revise § 2.183 to read as follows:

§ 2.183 Requirements for a complete renewal application.

A complete renewal application must include:

(a) A request for renewal of the registration, signed by the registrant or the registrant's representative;

(b) The fee required by § 2.6 for each class;

(c) The additional fee required by § 2.6 for each class if the renewal application is filed during the six-month grace period set forth in section 9(a) of the Act;

(d) If the registrant is not domiciled in the United States, the name and address of a United States resident on whom notices or process in proceedings affecting the registration may be served; and

(e) If the renewal application covers less than all the goods or services in the registration, a list of the particular goods or services to be renewed.

(f) If at least one fee is submitted for a multi-class registration, but the class(es) to which the fee(s) should be applied are not specified, the Office will issue a notice requiring either the submission of additional fee(s) or an indication of the class(es) to which the original fee(s) should be applied. Additional fee(s) may be submitted if the requirements of § 2.185 are met. If the required fee(s) are not submitted and the class(es) to which the original fee(s) should be applied are not specified, the Office will presume that the fee(s) cover the classes in ascending order, beginning with the lowest numbered class.

53. Revise § 2.184 to read as follows:

§ 2.184 Refusal of renewal.

(a) If the renewal application is not acceptable, the Office will issue a notice stating the reason(s) for refusal.

(b) A response to the refusal of renewal must be filed within six months of the mailing date of the Office action, or before the expiration date of the registration, whichever is later, or the registration will expire.

(c) If the renewal application is not filed within the time periods set forth in section 9(a) of the Act, the registration will expire.

54. Add § 2.185 to read as follows:

§ 2.185 Correcting deficiencies in renewal application.

(a) If the renewal application is filed within the time periods set forth in section 9(a) of the Act, deficiencies may be corrected, as follows:

(1) *Correcting deficiencies in renewal applications filed within one year before the expiration date of the registration.* If the renewal application is filed within one year before the expiration date of the registration, deficiencies may be corrected before the expiration date of the registration without paying a deficiency surcharge. Deficiencies may be corrected after the expiration date of the registration with payment of the deficiency surcharge required by section 9(a) of the Act and § 2.6.

(2) *Correcting deficiencies in renewal applications filed during the grace period.* If the renewal application is filed during the six-month grace period, deficiencies may be corrected before the expiration of the grace period without paying a deficiency surcharge. Deficiencies may be corrected after the expiration of the grace period with payment of the deficiency surcharge required by section 9(a) of the Act and § 2.6.

(b) If the renewal application is not filed within the time periods set forth in section 9(a) of the Act, the registration will expire. This deficiency cannot be cured.

55. Add § 2.186 to read as follows:

§ 2.186 Petition to Commissioner to review refusal of renewal.

(a) A response to the examiner's initial refusal of the renewal application is required before filing a petition to the Commissioner, unless the examiner directs otherwise. See § 2.184(b) for the deadline for responding to an examiner's Office action.

(b) If the examiner maintains the refusal of the renewal application, a petition to the Commissioner to review the refusal may be filed. The petition must be filed within six months of the mailing date of the Office action maintaining the refusal, or the renewal application will be abandoned and the registration will expire.

(c) A decision by the Commissioner is necessary before filing an appeal or commencing a civil action in any court.

PART 3—ASSIGNMENT, RECORDING AND RIGHTS OF ASSIGNEE

56. The authority citation for part 3 continues to read as follows:

Authority: 15 U.S.C. 1123; 35 U.S.C. 6, unless otherwise noted.

56a. Revise § 3.16 to read as follows:

§ 3.16 Assignability of trademarks prior to filing of an allegation of use statement.

Before an allegation of use under either 15 U.S.C. 1051(c) or 15 U.S.C. 1051(d) is filed, an applicant may only assign an application to register a mark under 15 U.S.C. 1051(b) to a successor to the applicant's business, or portion of the business to which the mark pertains, if that business is ongoing and existing.

57. Amend § 3.24 by revising the heading to read as follows:

§ 3.24 Requirements for documents and cover sheets relating to patents and patent applications.

* * * * *

58. Add § 3.25 to read as follows:

§ 3.25 Recording requirements for trademark applications and registrations.

(a) *Documents affecting title.* To record documents affecting title, a legible cover sheet (see § 3.31) and one of the following must be submitted:

(1) The original document;

(2) A copy of the document;

(3) A copy of an extract from the document evidencing the effect on title; or

(4) A statement signed by both the party conveying the interest and the party receiving the interest explaining how the conveyance affects title.

(b) *Name changes.* Only a legible cover sheet is required (See § 3.31).

(c) *All documents.* All documents submitted to the Office should be on white and non-shiny paper that is no larger than 8½ × 14 inches (21.6 × 33.1 cm.) with a one-inch (2.5 cm) margin on all sides. Only one side of each page should be used.

59. Revise § 3.28 to read as follows:

§ 3.28 Requests for recording.

Each document submitted to the Office for recording must include at least one cover sheet as specified in § 3.31 referring either to those patent applications and patents, or to those trademark applications and registrations, against which the document is to be recorded. If a document to be recorded includes interests in, or transactions involving, both patents and trademarks, separate patent and trademark cover sheets should be submitted. Only one set of documents and cover sheets to be recorded should be filed. If a document to be recorded is not accompanied by a completed cover sheet, the document and the incomplete cover sheet will be returned pursuant to § 3.51 for proper completion. The document and a completed cover sheet should be resubmitted.

60. Amend § 3.31 by revising paragraphs (a) and (b) and by adding paragraphs (d) and (e) to read as follows:

§ 3.31 Cover sheet content.

(a) Each patent or trademark cover sheet required by § 3.28 must contain:

(1) The name of the party conveying the interest;

(2) The name and address of the party receiving the interest;

(3) A description of the interest conveyed or transaction to be recorded;

(4) Identification of the interests involved:

(i) *For trademark assignments and trademark name changes:* Each trademark registration number and each trademark application number, if known, against which the Office is to record the document. If the trademark application number is not known, a copy of the application or a reproduction of the trademark must be submitted, along with an estimate of the date that the Office received the application; or

(ii) *For any other document affecting title to a trademark or patent application, registration or patent:* Each trademark or patent application number or each trademark registration number or patent against which the document is to be recorded;

(5) The name and address of the party to whom correspondence concerning the request to record the document should be mailed;

(6) The date the document was executed;

(7) An indication that the assignee of a trademark application or registration who is not domiciled in the United States has designated a domestic representative (see § 3.61); and

(8) The signature of the party submitting the document.

(b) A cover sheet should not refer to both patents and trademarks, since any information, including information about pending patent applications, submitted with a request for recordation of a document against a trademark application or trademark registration will become public record upon recordation.

* * * * *

(d) Each trademark cover sheet required by § 3.28 seeking to record a document against a trademark application or registration should include, in addition to the serial number or registration number of the trademark, identification of the trademark or a description of the trademark, against which the Office is to record the document.

(e) Each patent and trademark cover sheet required by § 3.28 should contain the number of applications, patents or registrations identified in the cover sheet and the total fee.

PART 6—CLASSIFICATION OF GOODS AND SERVICES UNDER THE TRADEMARK ACT

61. The authority citation for part 6 continues to read as follows:

Authority: 15 U.S.C. 1112, 1123; 35 U.S.C. 6, unless otherwise noted.

62. Revise § 6.1 to read as follows:

§ 6.1 International schedule of classes of goods and services.

Goods

1. Chemicals used in industry, science and photography, as well as in agriculture, horticulture and forestry; unprocessed artificial resins; unprocessed plastics; manures; fire extinguishing compositions; tempering and soldering preparations; chemical substances for preserving foodstuffs; tanning substances; adhesives used in industry.

2. Paints, varnishes, lacquers; preservatives against rust and against deterioration of wood; colorants; mordants; raw natural resins; metals in foil and powder form for painters, decorators, printers and artists.

3. Bleaching preparations and other substances for laundry use; cleaning, polishing, scouring and abrasive preparations; soaps; perfumery, essential oils, cosmetics, hair lotions; dentifrices.

4. Industrial oils and greases; lubricants; dust absorbing, wetting and binding compositions; fuels (including motor spirit) and illuminants; candles, wicks.

5. Pharmaceutical, veterinary, and sanitary preparations; dietetic substances adapted for medical use, food for babies; plasters, materials for dressings; material for stopping teeth, dental wax; disinfectants; preparations for destroying vermin; fungicides, herbicides.

6. Common metals and their alloys; metal building materials; transportable buildings of metal; materials of metal for railway tracks; nonelectric cables and wires of common metal; ironmongery, small items of metal hardware; pipes and tubes of metal; safes; goods of common metal not included in other classes; ores.

7. Machines and machine tools; motors and engines (except for land vehicles); machine coupling and transmission components (except for land vehicles); agricultural implements other than hand-operated; incubators for eggs.

8. Hand tools and implements (hand-operated); cutlery; side arms; razors.

9. Scientific, nautical, surveying, electric, photographic, cinematographic, optical, weighing, measuring, signalling, checking (supervision), life-saving and teaching apparatus and instruments; apparatus for recording, transmission or reproduction of sound or images; magnetic data carriers, recording discs; automatic vending machines and mechanisms for coin operated apparatus; cash registers, calculating machines, data processing equipment and computers; fire extinguishing apparatus.

10. Surgical, medical, dental, and veterinary apparatus and instruments, artificial limbs, eyes, and teeth; orthopedic articles; suture materials.

11. Apparatus for lighting, heating, steam generating, cooking, refrigerating, drying, ventilating, water supply, and sanitary purposes.

12. Vehicles; apparatus for locomotion by land, air, or water.

13. Firearms; ammunition and projectiles; explosives; fireworks.

14. Precious metals and their alloys and goods in precious metals or coated therewith, not included in other classes; jewelry, precious stones; horological and chronometric instruments.

15. Musical instruments.

16. Paper, cardboard and goods made from these materials, not included in other classes; printed matter; bookbinding material; photographs; stationery; adhesives for stationery or household purposes; artists' materials; paint brushes; typewriters and office requisites (except furniture); instructional and teaching material (except apparatus); plastic materials for packaging (not included in other

classes); playing cards; printers' type; printing blocks.

17. Rubber, gutta-percha, gum, asbestos, mica and goods made from these materials and not included in other classes; plastics in extruded form for use in manufacture; packing, stopping and insulating materials; flexible pipes, not of metal.

18. Leather and imitations of leather, and goods made of these materials and not included in other classes; animal skins, hides; trunks and travelling bags; umbrellas, parasols and walking sticks; whips, harness and saddlery.

19. Building materials (non-metallic); nonmetallic rigid pipes for building; asphalt, pitch and bitumen; nonmetallic transportable buildings; monuments, not of metal.

20. Furniture, mirrors, picture frames; goods (not included in other classes) of wood, cork, reed, cane, wicker, horn, bone, ivory, whalebone, shell, amber, mother-of-pearl, meerschaum and substitutes for all these materials, or of plastics.

21. Household or kitchen utensils and containers (not of precious metal or coated therewith); combs and sponges; brushes (except paint brushes); brush-making materials; articles for cleaning purposes; steel-wool; unworked or semi-worked glass (except glass used in building); glassware, porcelain and earthenware not included in other classes.

22. Ropes, string, nets, tents, awnings, tarpaulins, sails, sacks and bags (not included in other classes); padding and stuffing materials (except of rubber or plastics); raw fibrous textile materials.

23. Yarns and threads, for textile use.

24. Textiles and textile goods, not included in other classes; beds and table covers.

25. Clothing, footwear, headgear.

26. Lace and embroidery, ribbons and braid; buttons, hooks and eyes, pins and needles; artificial flowers.

27. Carpets, rugs, mats and matting, linoleum and other materials for covering existing floors; wall hangings (non-textile).

28. Games and playthings; gymnastic and sporting articles not included in other classes; decorations for Christmas trees.

29. Meat, fish, poultry and game; meat extracts; preserved, dried and cooked fruits and vegetables; jellies, jams, fruit sauces; eggs, milk and milk products; edible oils and fats.

30. Coffee, tea, cocoa, sugar, rice, tapioca, sago, artificial coffee; flour and preparations made from cereals, bread, pastry and confectionery, ices; honey, treacle; yeast, baking powder; salt, mustard; vinegar, sauces (condiments); spices; ice.

31. Agricultural, horticultural and forestry products and grains not included in other classes; live animals; fresh fruits and vegetables; seeds, natural plants and flowers; foodstuffs for animals; malt.

32. Beers; mineral and aerated waters and other nonalcoholic drinks; fruit drinks and fruit juices; syrups and other preparations for making beverages.

33. Alcoholic beverages (except beers).

34. Tobacco; smokers' articles; matches.

Services

35. Advertising; business management; business administration; office functions.

36. Insurance; financial affairs; monetary affairs; real estate affairs.

37. Building construction; repair; installation services.

38. Telecommunications.

39. Transport; packaging and storage of goods; travel arrangement.

40. Treatment of materials.

41. Education; providing of training; entertainment; sporting and cultural activities.

42. Providing of food and drink; temporary accommodation; medical, hygienic and beauty care; veterinary and agricultural services; legal services; scientific and industrial research; computer programming; services that cannot be classified in other classes.

Dated: May 3, 1999.

Q. Todd Dickinson,

Acting Assistant Secretary of Commerce and Acting Commissioner of Patents and Trademarks.

[FR Doc. 99–11471 Filed 5–10–99; 8:45 am]

BILLING CODE 3510–16–P

DEPARTMENT OF VETERANS AFFAIRS

38 CFR Part 4

RIN 2900–AH43

Schedule for Rating Disabilities; Eye

AGENCY: Department of Veterans Affairs.

ACTION: Proposed rule.

SUMMARY: The Department of Veterans Affairs (VA) is proposing to amend that portion of its rating schedule that addresses the eye. The intended effect of this action is to ensure that this section of the Schedule for Rating Disabilities uses current medical terminology and provides unambiguous criteria for evaluating disabilities of the eye.

DATES: Comments must be received on or before July 12, 1999.

ADDRESSES: Mail or hand-deliver written comments to: Director, Office of Regulations Management (02D), Department of Veterans Affairs, 810 Vermont Ave., NW, Room 1154, Washington, DC 20420. Comments should indicate that they are in response to ''RIN 2900–AH43.'' All written comments received will be available for public inspection at the above address in the Office of Regulations Management, Room 1158, between the hours of 8:00 a.m. and 4:30 p.m., Monday through Friday (except holidays).

FOR FURTHER INFORMATION CONTACT: Caroll McBrine, M.D., Consultant, Regulations Staff (211B), Compensation and Pension Service, Veterans Benefits Administration, Department of Veterans Affairs, 810 Vermont Ave., NW, Washington, DC, 20420, (202) 273–7230.

SUPPLEMENTARY INFORMATION: As part of a comprehensive review of its rating schedule, VA published an advance notice of proposed rulemaking regarding impairments of the eye, ear and other sense organs in the **Federal Register** on May 2, 1991 (56 FR 20170). In response, we received a number of comments from private and VA physicians and from other VA employees. For the reasons discussed below, this document proposes to amend the portion of the rating schedule that addresses disabilities of the eye.

The comments received included suggestions that we delete several diagnostic codes, provide diagnostic codes for additional conditions, and change evaluation criteria for a number of conditions. We have considered these comments as explained below.

In addition to publishing an advance notice of proposed rulemaking, we also contracted with an outside consultant to recommend changes to ensure that the schedule uses current medical terminology and unambiguous criteria, and that it reflects medical advances that have occurred since the last review. The consultant convened a panel of non-VA specialists to review the portion of the rating schedule that addresses eye conditions in order to formulate recommendations. We are proposing to adopt many of the recommendations the contract consultants submitted. However, we do not propose to adopt recommendations that address areas, such as frequency of examinations, that are clearly beyond the scope of the contract or that deal with issues that affect the internal consistency of the rating schedule, such as percentage evaluations. Assignments of disability

ratings are supposed to reflect relative levels of economic impairment, and the consultants did not consider eye disabilities in relation to the other parts of the rating schedule in making their recommendations. Relevant recommendations from these individuals are discussed below.

We determined that a number of grammatical changes would be helpful in eliminating ambiguity and ensuring that the schedule presents the rating criteria for listed disabilities as precisely as possible. We are thus proposing editorial changes, primarily in syntax and punctuation, throughout this portion of the schedule. These changes, which will not be addressed individually, are intended to clarify the rating criteria and represent no substantive amendment.

For VA purposes, the evaluation of visual impairment is based on impairment of visual acuity, visual field, and muscle function. General instructions for rating these disabilities are currently contained in §§ 4.75 through 4.84a of 38 CFR, and in notes appended to various diagnostic codes. The material is randomly organized, however, and we propose to reorganize it so that all material related to a single issue is grouped together. We propose to reorganize these instructions under four topics: (1) General considerations for evaluating visual impairment; (2) Visual acuity; (3) Visual fields; and (4) Muscle function.

We propose that § 4.75, ''General considerations for evaluating visual impairment,'' be composed of six paragraphs: (a) Visual impairment, (b) Examination for visual impairment, (c) Service-connected visual impairment of only one eye, (d) Maximum evaluation for visual impairment of one eye, (e) Anatomical loss of one eye without prosthesis, and (f) Special monthly compensation.

For the sake of clarity, we propose that paragraph (a), ''Visual impairment,'' state that the evaluation of visual impairment is based on impairment of visual acuity (excluding developmental errors of refraction), visual field, and muscle function.

Proposed paragraph (b) of § 4.75, ''Examination for visual impairment,'' is derived from current §§ 4.75 and 4.77 and the notes following diagnostic code 6080 and would require that a licensed optometrist or ophthalmologist conduct the examination and that the examiner identify the disease, injury, or other pathologic process responsible for any visual impairment found. It also states that examinations for the evaluation of visual fields or muscle function will be conducted only when there is a medical indication of disease or injury that may be associated with visual field defect or impaired muscle function. It also states that the fundus must be examined with the veteran's pupils dilated (unless medically contraindicated).

The method of evaluation when visual impairment of only one eye is service-connected is not specifically addressed in current regulations. We propose to add paragraph (c), ''Service-connected visual impairment of only one eye,'' to direct that when visual impairment of only one eye is service-connected, either directly or by aggravation, the visual acuity of the non-service-connected eye shall be considered to be 20/40, subject to the provisions of 38 CFR 3.383(a) (which directs that when there is blindness in one eye as a result of service-connected disability and blindness in the other eye as a result of non-service-connected disability, compensation is payable as if both were service-connected). This method is consistent with current VA practice in determining the level of disability when only one eye is service-connected. The approach is also consistent with VAOPGCPREC 32–97, in which the General Counsel held that, if a claimant has service-connected hearing loss in one ear and nonservice-connected hearing loss in the other ear, the hearing in the ear having nonservice-connected loss should be considered normal for purposes of computing the service-connected disability rating, unless the claimant is totally deaf in both ears. In VAOPGCPREC 32–97, the General Counsel noted that the statutory scheme governing VA benefits generally authorizes compensation for service-connected disabilities only, see 38 U.S.C. 101 (13), 1110, and 1131, and does not permit combination of ratings for service-connected and nonservice-connected disabilities for compensation purposes. See 38 U.S.C. 1523 (authorizing, for nonservice-connected pension purposes, combination of ratings for service-connected and nonservice-connected disabilities) and 1157 (authorizing compensation based on the combination of ratings for service-connected disabilities). *See also* 38 CFR 3.323; 38 CFR 4.14 (''the use of manifestations not resulting from service-connected disease or injury in establishing the service-connected evaluation * * * [is] to be avoided.''). Therefore, we propose to consider the visual acuity of the nonservice-connected eye to be 20/40, the level of visual acuity that warrants a zero-percent evaluation, so that any loss of visual acuity in the non-service-connected eye will not affect the determination of the level of disability for the service-connected eye. Adding the provisions of paragraph (c) will remove any doubt about the correct method of evaluation, and will assure that evaluations will be consistent, in cases where visual impairment of only one eye is service-connected.

In conjunction with the addition of paragraph (c) of § 4.75, we propose to remove current § 4.78, ''Computing aggravation,'' which states that aggravation of preexisting visual disability will be determined based upon the evaluation of vision in both eyes before and after suffering the aggravation, even if the impairment of vision in only one eye is service-connected, and that with subsequent increase in the disability of either eye due to intercurrent injury or disease not associated with service, the basis of compensation will be the condition of the eyes before suffering the subsequent increase. This section is not consistent with VA's method of evaluating visual impairment incurred in service in one eye only nor is it consistent with the statutory scheme, as discussed above. Furthermore, its application may, in some cases, result in a higher evaluation for a condition that is aggravated by service than for an identical condition incurred in service, and this is simply not equitable. This method is also inconsistent with the method of evaluating other paired organs, such as the hands, where only the service-connected hand is evaluated, regardless of the status of the non-service-connected hand, again subject to the provisions of 38 CFR 3.383(a), and where the same method is used for incurrence as for aggravation. For these reasons, we propose to remove the material in § 4.78 in favor of the clear and consistent method of evaluation described in paragraph (c).

Proposed paragraph (d) of § 4.75, ''Maximum evaluation for visual impairment of one eye,'' is derived from current § 4.80, ''Rating of one eye,'' which states that the combined ratings for disabilities of the same eye should not exceed the amount for total loss of vision of that eye unless there is enucleation or a serious cosmetic defect added to the total loss of vision. Some of this language—''disabilities of the same eye,'' ''total loss of vision,'' and ''serious cosmetic defect''—is subjective or ambiguous. Since some disabilities (e.g., malignant neoplasm) that may affect only one eye can be evaluated up to 100 percent, we propose to change the reference to ''disabilities'' of one eye to ''visual impairment'' of one eye to clarify that it is only an evaluation for

visual impairment that is limited to 30 percent. In place of ''shall not exceed the maximum,'' we propose to use the more direct language ''shall not exceed 30 percent,'' in order to remove any ambiguity. Only anatomical loss of an eye can result in a higher evaluation (under diagnostic code 6063). We further propose to change ''serious cosmetic defect'' to ''disfigurement,'' because a proposed diagnostic code (7800) and evaluation criteria for disfigurement of the head, face, or neck were published in the **Federal Register** of January 19, 1993 (*See* 58 FR 4969) as part of the revision of the portion of the rating schedule that addresses the skin, but there is no diagnostic code that addresses ''serious cosmetic defect.'' Section 4.75(d) is therefore proposed to read ''The evaluation for visual impairment of one eye shall not exceed 30 percent unless there is anatomical loss of the eye. The evaluation for visual impairment of one eye may, however, be combined with evaluations for other disabilities, e.g., disfigurement, that are not based on visual impairment.''

We propose that paragraph (e) of § 4.75, ''Anatomical loss of one eye with inability to wear a prosthesis,'' require that evaluations be increased by 10 percent when there is anatomical loss of one eye, and a prosthesis cannot be worn. This is derived from material in a footnote to diagnostic codes 6064, 6065, and 6066 concerning the evaluation for anatomical loss of one eye, and we therefore propose to delete that portion of the footnote as redundant. We further propose to add for clarity a statement that the maximum evaluation shall not exceed 100 percent.

We propose that paragraph (f) of § 4.75, ''Special monthly compensation,'' direct the rating agency to refer to 38 CFR 3.350 to determine whether the veteran may be entitled to special monthly compensation (SMC). This is similar to instructions we have placed in other revised portions of the rating schedule where there is potential entitlement to special monthly compensation, e.g., in the portion that addresses gynecological conditions and disorders of the breasts. This is intended as an additional reminder to the rating agency to assure that SMC is assigned when warranted.

We propose that §§ 4.76, 4.77, and 4.78 address impairment of visual acuity, visual fields, and muscle function, respectively, with each section containing subsections that address examinations and evaluations of the impairments, as discussed in more detail below.

We propose that § 4.76, ''Visual acuity,'' derived from material currently found in §§ 4.75 and 4.84, plus M21–1, Part VI, consist of two paragraphs: (a) Examination of visual acuity and (b) Evaluation of visual acuity.

We propose that paragraph (a) of § 4.76, which is based on current § 4.75, require that, to be adequate for VA purposes, *uncorrected* and *corrected* visual acuity for *distance* and *near* be recorded, as determined using Snellen's test type or its equivalent.

We propose two subparagraphs under proposed paragraph (b) of § 4.76, ''Evaluation of visual acuity.'' Subparagraph (1) would require that visual acuity be generally evaluated on the basis of corrected distance vision. However, when the lens required to correct distance vision in the poorer eye differs by more than three diopters from the lens required to correct distance vision in the better eye, and the difference is not due to a congenital/developmental refractive error, the visual acuity of the poorer eye for evaluation purposes shall be either its uncorrected visual acuity or its visual acuity as corrected by a lens that does not differ by more than three diopters from the lens needed for correction of the other eye, whichever results in the better combined visual acuity. The current schedule has similar provisions but uses a four-diopter, rather than a three-diopter, difference, and refers only to spherical correction. We propose to use three diopters of difference instead of four because our contract consultants suggested that, since three diopters of difference would cause a patient to be symptomatic, requiring a four-diopter difference is too stringent. The consultants further pointed out that the astigmatism that underlies this disorder may require cylindrical, as well as spherical, correction, and we therefore propose to delete the language referring to spherical correction.

Paragraph (b)(2) of § 4.76 would direct that, as long as the individual customarily wears contact lenses, VA evaluate visual acuity for eyes affected by a corneal disorder that results in severe irregular astigmatism that can be improved more by contact lenses than by eyeglass lenses, as corrected by contact lenses. The current § 4.75 states that the best distant vision obtainable after best correction by glasses shall be the basis of rating except in cases of keratoconus in which contact lenses are medically required. However, on the recommendation of our contract consultants, we propose to include corneal disorders other than keratoconus, if they also result in astigmatism where contact lenses are more useful for correction than eyeglasses. We propose to remove the requirement that contact lenses be ''medically required'' in order to use this method of evaluation, in favor of a requirement that it be used only if contact lenses improve visual acuity better than eyeglass lenses, and if the individual customarily wears contact lenses (because some patients cannot wear contact lenses even though they would improve their vision). This provision assures an accurate assessment of corrected vision for those with a cornea that is scarred or irregularly shaped, and in whom individually fitted contact lenses provide the best visual acuity.

Paragraph (b)(3) of § 4.76 would require that in cases where the examiner reports a difference equal to two or more scheduled steps between near and distance corrected vision, with the near vision being worse, the examination must include at least two recordings of near and distance corrected vision and an explanation of the reason for the difference. We propose to require two recordings of visual acuity and an explanation of the cause of the difference between near and distance vision to assure that the presence of such a difference, which is very unusual, is confirmed and that any pathologic condition responsible for the difference is diagnosed. Current § 4.84 states that when there is a substantial difference between the near and distant corrected vision, the case should be referred to the Director, Compensation and Pension Service. We propose to specify a difference of two or more scheduled steps because our medical consultants stated that amount would be considered a ''substantial'' difference, and this more objective standard will assure consistency in determining which cases require application of this special provision. Evaluations of visual acuity are ordinarily based on distance vision, and distance vision is normally very similar, if not identical, to near vision. Since that is not true of these cases, and because near vision is so important for many tasks, we propose to adjust the evaluation for distance vision in these cases. In order to assure consistent and fair evaluations in these cases without the need to refer them to the Director of the Compensation and Pension Service, we propose, after consultation with licensed optometrists and ophthalmologists, that evaluation be made as if distance vision were one step poorer than measured, which, while recognizing that distance vision is the principal basis of the evaluation of visual acuity, will approximately

compensate for the additional loss of near vision in these cases.

We propose that § 4.77, ''Visual Fields,'' be composed of three paragraphs: (a) Examination of visual fields, (b) Evaluation of visual fields, and (c) Combination of visual field defect and decreased visual acuity.

Paragraph (a) of § 4.77, ''Examination of visual fields,'' derived from current § 4.76, Examination of field vision, would require use of a Goldmann kinetic perimeter or equivalent kinetic method to measure visual fields. We propose to revise the language, for the sake of accuracy, by changing the requirement for using a 3mm. white test object to one for using a standard target size and luminance (Goldmann equivalent (III/4e). This equivalent is a test object with an area of $4mm^2$, average diameter of 0.43 degrees visual angle, and zero decibels of attenuation of luminance (maximum brightness for the Goldmann perimeter). Although the static (automated, computerized) perimeter is now in common use, the visual fields measured by the static and kinetic methods are not always comparable, and standards remain uncertain, despite ongoing research on this subject. Until there are reliable standards for comparing the results from static and kinetic perimetry, we propose to retain the requirement for the use of Goldmann kinetic perimetry, which is more reliable than the alternatives.

Paragraph (b) of § 4.77, ''Evaluation of visual fields,'' derived from current § 4.76a, ''Computation of average concentric contraction of visual fields,'' would establish the method for determining the extent of concentric visual field defect by measuring the remaining visual field in the eight principal meridians (horizontal, vertical, and main diagonals) and averaging them. We propose to remove the example in current § 4.76a since, in our judgment, it is unnecessary. We propose to delete the statement from § 4.76 that concentric contraction to five degrees or less is the equivalent of 5/200 visual acuity because this information is included under diagnostic code 6080 (visual field defects) and there is no need, nor would it serve any useful purpose, to repeat it in § 4.76.

We propose that paragraph (c) of § 4.77, ''Combination of visual field defect and decreased visual acuity,'' direct how to determine the evaluation when both visual acuity and visual field are impaired in one or both eyes. VA's Adjudication Manual, M21–1, Part VI, currently directs that such cases be referred to the Director of the Compensation and Pension Service for evaluation. We propose that the percentage evaluation for visual acuity and for visual field loss each be determined and then combined under 38 CFR 4.25 (Combined ratings table). This change is consistent with the method of combining disabilities elsewhere in the body, which is allowed as long as the same disability is not evaluated twice, and would eliminate the need to refer these cases to the Director of the Compensation and Pension Service. It would provide a fair and consistent method of evaluation that takes into account both facets of visual impairment.

We propose that § 4.78, ''Muscle function,'' be composed of two paragraphs: (a) Examination of muscle function, and (b) Evaluation of muscle function.

Paragraph (a) of § 4.78, ''Examination of muscle function,'' derived from current § 4.77, would require that the Goldmann perimeter be used to measure muscle function and that the areas of diplopia be charted. We propose to delete as unnecessary the statement that impairment of muscle function is to be supported by record of actual appropriate pathology because § 4.75(b) includes a requirement that the disease, injury, or other pathologic process responsible for any visual impairment found must be identified and that examinations for the evaluation of visual fields or muscle function will be conducted only when there is a medical indication of disease or injury that may be associated with visual field defect or impaired muscle function. Section 4.75(b) is sufficient, in our judgment, to assure that the underlying pathology is identified.

Paragraph (b) of § 4.78, ''Evaluation of muscle function,'' would establish a revised method of evaluating muscle function when another type of visual impairment is also present. Current note (2) following diagnostic code 6090 states that an evaluation for diplopia will be applied to only one eye and may not be combined with an evaluation for decreased visual acuity or visual field loss in the same eye. It further states that when both diplopia and decreased visual acuity or visual field loss are present in both eyes, the evaluation for diplopia shall be assigned to the poorer eye, and the evaluation for either corrected visual acuity or contraction of visual field to the better eye. It does not address the situation where diplopia is present, and another type of visual impairment is present in only one eye. Under the current method, lower evaluations may result when the diplopia is taken into account in the evaluation than when it is not, unless the diplopia is very severe. VA's manual for adjudication procedures, M21–1, states that this method is to be used only if it would be advantageous to the veteran.

For the sake of equitable and fair evaluations, we propose, after consultation with licensed optometrists and ophthalmologists, that subparagraph (1) establish the following method of evaluating diplopia, whether associated with unilateral or bilateral impaired visual acuity or visual field. We propose that, for the poorer eye (or the affected eye, if only one eye is service-connected), the rating agency assign a level of visual acuity (for decreased visual acuity or visual field defect expressed as a level of visual acuity) one step poorer than it would be otherwise, if the evaluation for diplopia under diagnostic code 6090 is 20/70 or 20/100; a level two steps poorer if the evaluation for diplopia is 20/200 or 15/200; and a level three steps poorer if the evaluation for diplopia is 5/200. The adjusted level, however, could not exceed 5/200. The percentage evaluation would then be determined under diagnostic codes 6064 through 6066, using the adjusted visual acuity for the poorer eye (or the affected eye), and the corrected visual acuity for the better eye. Under this method, the severity of diplopia would correlate with the evaluation level, with the higher evaluation assigned when the diplopia is worse, and the adjusted evaluation could never be lower than one that doesn't take diplopia into account, as can happen under the current method. An evaluation for diplopia of 20/40, assigned when diplopia affects only vision at 31 to 40 degrees on upward gaze, would have no effect on the overall evaluation. This method allows a full range of evaluation for visual impairment of a single eye, but does not exceed it. Unlike the current schedule provision, it also provides a method of evaluating visual impairment when both diplopia and loss of visual acuity are present in only one eye, or when they are present in both eyes, but only one eye is service-connected.

The current schedule contains a statement that diplopia which is occasional or correctable is not considered a disability. Since this fact is pertinent to the issue of service connection for diplopia, but has no bearing on evaluation, including it in the rating schedule is unnecessary and inappropriate.

Paragraph (b)(2) of § 4.78, derived from § 4.77 and the third note following diagnostic code 6090, would define impairment of muscle function and establish the procedure for evaluating

diplopia when the affected field extends beyond more than one quadrant or range of degrees.

Paragraph (b)(3) of § 4.78, derived from note (4) following diagnostic code 6090, would require that the evaluation for diplopia under diagnostic code 6090 be increased to the next higher evaluation provided in the rating schedule whenever diplopia exists in separate areas of the same eye.

Current § 4.79, ''Loss of use of one eye, having only light perception,'' duplicates 38 CFR 3.350(a)(4), (b)(2) and (b)(3), which reflect statutory criteria for entitlement to special monthly compensation. Because it is redundant, we propose to delete § 4.79 in favor of a footnote following diagnostic codes 6066 and 6080 referring the rating agency to § 3.350.

We propose to delete current §§ 4.80 and 4.84 and the notes following the diagnostic codes in these sections because the material will be moved to proposed §§ 4.75 through 4.78.

Current Table IV, ''Table for Rating Bilateral Blindness or Blindness Combined with Hearing Loss with Dictator's Code and 38 CFR Citations,'' is a chart displaying SMC codes to be used by the rating agency when dictating rating decisions for transcription. The dictator's rating codes have been changed since they were first published in Table IV, and they appear in their current form in Appendix A of Part I of M21–1, VA's Adjudication Procedures Manual. This chart's only purpose is to simplify the process of dictating ratings to a transcription unit. Since it has no bearing on the evaluation of disabilities, and contains no policy guidelines which rating agencies must follow, we propose to delete Table IV from the rating schedule.

Current Table V, ''Ratings for Central Visual Acuity Impairment,'' repeats the evaluations and diagnostic codes for impaired visual acuity in chart form. Since diagnostic codes 6061 through 6066 establish evaluation criteria in a format which is consistent with the rest of the rating schedule, we propose to delete Table V as redundant and unnecessary for any regulatory purpose. Since current § 4.83a explains how to use Table V, we also propose to remove § 4.83a. Current § 4.83 explains how to record ratings for impairment of central visual acuity, and it is therefore directed more at examiners than at rating agencies. Since the method described is standard, we propose to delete that section as unnecessary.

Uveitis, keratitis, scleritis, iritis, cyclitis, choroiditis, retinitis, recent intra-ocular hemorrhage, detachment of retina, and unhealed eye injury (diagnostic codes 6000 through 6009) are currently evaluated at levels of 10 to 100 percent based on impairment of visual acuity or field loss, pain, rest-requirements, or episodic incapacity, combining an additional rating of 10 percent during continuance of active pathology. We propose a revised set of evaluation criteria in the form of a general rating formula following diagnostic code 6009. We propose that evaluation be based either on visual impairment or on incapacitating episodes, whichever results in a higher evaluation. We propose to define an incapacitating episode, for VA purposes, as one requiring bedrest and treatment by a physician or other healthcare provider. We propose to establish evaluation levels of 10, 20, 40, and 60 percent based on incapacitating episodes, in order to accommodate this broad group of conditions with the potential for a wide range of length of periods of incapacitation. We propose an evaluation of 60 percent with incapacitating episodes of at least six weeks total duration per year; of 40 percent with incapacitating episodes of at least four weeks, but less than six weeks, total duration per year; of 20 percent with incapacitating episodes of at least two weeks, but less than four weeks, total duration per year; and of 10 percent with incapacitating episodes total of at least one week, but less than two weeks, total duration per year. These criteria are clearer and more objective than current criteria, and will allow the extent of incapacitating episodes to be consistently taken into account.

We propose to change the terminology in several diagnostic codes to reflect current medical usage, in accord with suggestions by our consultants. We propose to change the title of diagnostic code 6000, ''uveitis,'' to ''choroidopathy,'' because the term ''choroidopathy'' includes pathological conditions of the choroid other than inflammation, and also encompasses the subcategories of uveitis, iritis, cyclitis, and choroiditis. We therefore propose to delete diagnostic codes 6003 (iritis), 6004 (cyclitis), and 6005 (choroiditis), since they are included in diagnostic code 6000. Similarly, we propose to change the title of diagnostic code 6001, ''keratitis,'' to ''keratopathy,'' a broader category that includes corneal conditions other than inflammation, and the title of diagnostic code 6006, ''retinitis,'' to ''retinopathy or maculopathy,'' broader terms that encompass not only retinitis but other retinal and macular diseases and degenerations, for the same reason. We propose to revise the title of diagnostic code 6007 (hemorrhage, intra-ocular, recent) to ''intra-ocular hemorrhage'' because both recent (or acute) and chronic intra-ocular hemorrhage may be disabling. We propose to edit the title of diagnostic code 6010 (tuberculosis of eye) and to correct an erroneous reference to codes under which inactive tuberculosis of the eye is evaluated. The current schedule refers to §§ 4.88b and 4.89, but § 4.88b was redesignated § 4.88c in a separate rulemaking, and the correct section references are now 4.88c and 4.89. We propose to simplify the title of diagnostic code 6011 from ''retina, localized scars, atrophy, or irregularities of, centrally located, with irregular, duplicated, enlarged or diminished image'' to ''retinal scars, atrophy, or irregularities.'' We propose to retain a ten-percent evaluation under diagnostic code 6011 for localized scars, atrophy, or irregularities that are centrally located and that result in an irregular, duplicated, enlarged, or diminished image. Evaluation of these conditions would otherwise be based on visual impairment, as defined in proposed § 4.75(a).

We propose to revise the title of diagnostic code 6012, ''glaucoma, congestive or inflammatory,'' to ''angle-closure glaucoma,'' the current medical term for the condition. For the same reason, we propose to change the title of diagnostic code 6013, ''glaucoma, simple, primary, noncongestive,'' to ''open-angle glaucoma.''

Diagnostic code 6012, angle-closure glaucoma, is currently evaluated either as iritis (diagnostic code 6003) or by rating at 100 percent if there are ''frequent attacks of considerable duration; during continuance of actual total disability.'' ''Frequent'' and ''considerable'' are subjective terms that are susceptible to different interpretations. In addition, these criteria are difficult to apply because acute attacks are usually of short duration, and it is unlikely that an examination for disability could be scheduled and conducted during such an attack. Therefore, we propose to evaluate this condition similarly to diagnostic codes 6000 through 6009, based either on visual impairment or on incapacitating episodes, whichever results in a higher evaluation. Because in some cases this condition is characterized primarily by frequent and sometimes prolonged intermittent episodes of incapacitation, we propose to provide a wide range of evaluations—from 20 to 60 percent—based on incapacitating episodes. We also propose to establish a ten-percent

minimum evaluation if continuous medication is required. A minimum evaluation is not warranted if there is no visual impairment and no treatment is needed other than frequent observation. We propose these more objective criteria in order to provide clearer guidance on evaluation and to assure more consistent evaluations. With these criteria, the direction to rate as iritis is not needed, and we propose to delete it.

Diagnostic code 6013, open-angle glaucoma, is currently evaluated on impairment of visual acuity or field loss, with a minimum evaluation of ten percent. We propose that it be evaluated on visual impairment, which will allow consideration of impairment of visual acuity, visual field, or muscle function, with a ten-percent minimum evaluation if continuous medication is required. A minimum evaluation is not warranted if there is no visual impairment and no treatment is needed other than frequent observation.

We propose to update the term ''new growth'' to ''neoplasm'' in the titles of diagnostic codes 6014 and 6015, which address malignant and benign eye tumors, respectively.

Malignant neoplasms (diagnostic code 6014) are now evaluated at 100 percent pending completion of surgery or other indicated treatment, and, when healed, are rated on residuals. However, not all malignant neoplasms of the eye are totally disabling or require treatment that is totally disabling for a period of time. For example, eye malignancies such as iris melanoma and choroid melanoma often require no treatment other than observation, even though they are malignant on pathology examination. We therefore propose to evaluate malignancies of the eyeball similar to the way we proposed to evaluate skin malignancies (published in the **Federal Register** of January 19, 1993 (*See* 58 FR 4969)). If a malignant neoplasm of the eyeball requires therapy that is comparable to that used for internal malignancies, i.e., systemic chemotherapy, X-ray therapy more extensive than to the eye, or surgery more extensive than enucleation, a 100 percent evaluation would be assigned from the date of onset of treatment, and would continue, with a mandatory VA examination six months following the completion of such antineoplastic treatment, and any change in evaluation based upon that or any subsequent examination would be subject to the effective date provisions of § 3.105(e). If there has been no local recurrence or metastasis, evaluation would then be made on residuals. These revisions are similar to those now in effect for malignant neoplasms in several revised sections of the rating schedule (e.g., gynecological conditions and disorders of the breast, respiratory system, endocrine system). If treatment is confined to the eye, the provisions for a 100 percent evaluation would not apply. If no treatment other than observation is required, we propose that evaluation be made by separately evaluating visual impairment and nonvisual impairment, e.g., disfigurement (diagnostic code 7800), and combining the evaluations under § 4.25. In our judgment, neoplasms that require only periodic observation, without surgical or other medical intervention, are not totally disabling and therefore do not warrant the total evaluation ordinarily provided for malignant neoplasms. If treatment comparable to that for internal malignancies is needed, eye malignancies would be evaluated in the same manner as internal malignancies requiring treatment.

Benign neoplasms (diagnostic code 6015) are currently evaluated on impaired vision, with a minimum evaluation of 10 percent, and healed benign neoplasms are rated on residuals. A standard ophthalmology text, (Frank W. Newell, M.D., *Ophthalmology Principles and Concepts*, p. 207, 7th ed. 1992), indicates no specific impairment due to benign neoplasms, and no need for continuing medication. A minimum evaluation for all cases is therefore not warranted, and we propose to remove it. We propose that evaluation be based on visual impairment, with that evaluation to be combined with an evaluation for any nonvisual impairment, e.g., disfigurement. These criteria better encompass the impairments that may result from benign neoplasms. We propose to revise the title of diagnostic code 6015 from ''new growths, benign (eyeball and adnexa, other than superficial)'' to ''benign neoplasms (of eyeball and adnexa)'' because without the requirement for a minimum evaluation, the distinction between superficial and other types of benign neoplasm is not relevant.

We propose to edit the title of diagnostic code 6017, ''conjunctivitis, trachomatous, chronic'' to ''trachomatous conjunctivitis'' and the title of diagnostic code 6018, ''conjunctivitis, other, chronic'' to ''chronic conjunctivitis (nontrachomatous).'' Evaluations of healed trachomatous and nontrachomatous conjunctivitis are currently based on residuals, with a zero-percent evaluation if there are no residuals. We propose to remove the zero-percent evaluation level. 38 CFR 4.31 provides for a zero-percent evaluation in all cases when the criteria for a compensable evaluation is not met, which obviates the need to include zero-percent evaluation criteria in this case. Active trachomatous conjunctivitis is currently evaluated on impairment of visual acuity, with a minimum evaluation of 30 percent while there is active pathology; other forms of active conjunctivitis are evaluated at 10 percent when there are ''objective symptoms.'' We propose to change ''objective symptoms'' to ''objective findings, such as red, thick conjunctivae, mucous secretion, etc.'' under diagnostic code 6018, since symptoms are, by definition, subjective, and to change ''healed'' to ''inactive'' because conjunctivitis may be active intermittently. We propose that inactive trachomatous conjunctivitis and inactive chronic conjunctivitis be evaluated on residuals, such as visual impairment, disfigurement (diagnostic code 7800), etc. Our contract consultants suggested that these categories of conjunctivitis be combined because of the rarity of trachoma. Because trachoma is much more severe than most other types of chronic conjunctivitis and often leads to blindness, it warrants a 30-percent minimum evaluation, when active, an evaluation level that cannot be justified for other types of conjunctivitis. Since we must assure appropriate evaluations for these disparate conditions, we do not propose to adopt the consultants' suggestion.

Ptosis (diagnostic code 6019) is currently evaluated equivalent to visual acuity of 5/200 whenever the pupil is wholly obscured, equivalent to 20/100 if the pupil is one-half or more obscured, and on disfigurement if less than one-half of the pupil is obscured. The extent to which a pupil is obscured can be difficult to determine reliably, and an evaluation for ptosis based directly on visual impairment was recommended by our contract consultants. We propose to adopt their suggestion and, in the absence of visual impairment, base evaluation on disfigurement (diagnostic code 7800).

Our contract consultants recommended that we add a note providing an alternative evaluation as disfigurement (diagnostic code 7800) for ectropion (diagnostic code 6020), entropion (diagnostic code 6121), lagophthalmos (diagnostic code 6022), eyebrows, loss of complete, unilateral or bilateral (diagnostic code 6023), eyelashes, loss of, complete, unilateral or bilateral (diagnostic code 6024), and epiphora (diagnostic code 6025). The diagnosis of one of these conditions is

sufficient to assign the current percentage evaluations because the diagnosis itself implies the presence of some degree of disfigurement, which is the primary basis of these evaluations. Since an evaluation for disfigurement is encompassed in the percentages provided, the suggested note would be redundant, and we do not propose to adopt the consultants' suggestion.

We propose to change the title of diagnostic code 6025 from ''epiphora'' to ''disorders of the lacrimal apparatus (epiphora, dacryocystitis, etc.)'' because all disorders of the lacrimal apparatus are evaluated in the same way, and they commonly occur together. In conjunction with this change, we propose to delete dacryocystitis (diagnostic code 6031), as our consultants suggested, because it will be included under diagnostic code 6025.

We propose to change the title of diagnostic code 6026 from ''neuritis, optic'', to ''optic neuropathy'', a broader term that includes conditions other than inflammation of the optic nerve. It is likely that optic nerve conditions other than neuritis are currently being evaluated under this code, because there is no other diagnostic code that specifically addresses diseases of the optic nerve, but this change will assure consistency by including all optic nerve disorders under diagnostic code 6026.

Current diagnostic codes 6027, ''cataract, traumatic,'' and 6028, ''cataract, senile, and others,'' are evaluated under the same criteria—impairment of vision preoperatively, and impairment of vision and aphakia postoperatively—because they result in identical impairment. We therefore propose to delete diagnostic code 6028 and to establish a single diagnostic code, 6027, ''cataract of any type,'' for all types of cataracts. We propose that evaluation preoperatively be based on visual impairment and postoperatively on visual impairment if a replacement lens is present, and on aphakia if there is no replacement lens. Our contract consultants suggested we add a diagnostic code for pseudophakia to the rating schedule. The term ''pseudophakia'' has two meanings—one, a condition where the lens has been replaced status post-cataract removal and the other, a condition in which a degenerated lens is spontaneously replaced by some other type of tissue. Dorland's Illustrated Medical Dictionary (27th ed. 1988) does not include the former definition. Therefore, to avoid confusion, instead of adding a code for pseudophakia, we propose to use clear and unambiguous language in diagnostic code 6027 concerning the post-operative evaluation of cataracts and to include pseudophakia as a parenthetical expression after ''if a replacement lens is present.''

Current diagnostic codes 6029, ''aphakia,'' and 6033, ''lens, crystalline, dislocation of,'' are evaluated under the same criteria because they result in identical impairments. We propose to combine the conditions under diagnostic code 6029, retitle it ''aphakia or dislocation of crystalline lens,'' and delete diagnostic code 6033, since there is no need to retain two separate diagnostic codes for these conditions for statistical or other purposes. There is currently a minimum evaluation of 30 percent under diagnostic code 6029, whether unilateral or bilateral, and there are a number of additional rules for evaluation that are applied depending on whether one or both eyes are aphakic. In order to simplify the current method of evaluation, which has sometimes caused confusion, we propose to instruct the rating agency to evaluate on the basis of visual impairment, elevated by one step. We propose to retain the minimum 30-percent evaluation for unilateral or bilateral aphakia. These minimum evaluations are warranted because the severe hyperopia that results from aphakia cannot be adequately corrected. In addition, there is substantial magnification of the image in an aphakic eye, peripheral vision is reduced, and with aphakia of a single eye, image fusion may be difficult because of the great difference in refraction between the eyes. Glare and photophobia are common additional problems, and eyeglasses cause a ring scotoma so that objects appear to jump in and out of view. The proposed criteria are consistent with other methods of evaluating conditions manifested primarily by visual impairment, take into account visual problems other than loss of visual acuity that are not precisely measurable, and are clearer, which should assure consistent evaluations.

We propose to revise the title of diagnostic code 6030 from ''accommodation, paralysis of'' to ''paralysis of accommodation (due to neuropathy of the Oculomotor Nerve)'' because pathology of that cranial nerve is the usual etiology.

We propose to change the title of diagnostic code 6032 from ''eyelids, loss of portion of'' to ''loss of eyelids, partial or complete,'' because complete loss of eyelids may also require evaluation and can be evaluated under the same criteria. Diagnostic code 6032 is currently rated as disfigurement (diagnostic code 7800). Our contract consultants suggested we combine an evaluation for the underlying disease (none of which they named) with an evaluation for visual impairment. Instead, we propose to direct that an evaluation for visual impairment be combined with an evaluation for disfigurement (diagnostic code 7800). An underlying disease producing other impairments would be evaluated under the appropriate body system, but it is not necessary to provide this instruction here because it is not unique to this condition.

Pterygium, diagnostic code 6034, is currently evaluated on loss of vision, if any, and we propose that it be evaluated on visual impairment, disfigurement (diagnostic code 7800), conjunctivitis (diagnostic code 6018), etc. This proposed change better encompasses the possible range of impairments from pterygium.

A note currently following diagnostic code 6035, keratoconus, requires a 30-percent minimum evaluation when ''contact lenses are medically required.'' We propose to delete the minimum evaluation and base evaluation on corrected visual acuity (using contact lenses rather than eyeglass lenses for that determination if they provide the best corrected visual acuity and are customarily worn by the individual) because decreased visual acuity is the only disabling effect of keratoconus. If contact lenses best correct the visual impairment, and can be worn by the individual, there would be no significant additional disability to warrant a minimum evaluation, and the corrected visual acuity using contact lenses would be a reasonable basis of evaluation. If eyeglass lenses can correct the visual acuity, the usual method of determining corrected visual acuity would be the basis of evaluation.

We propose to add diagnostic code 6036 for ''status post corneal transplant,'' a common condition, with evaluation based on visual impairment. Either loss of visual acuity or visual field loss or both may occur in corneal transplant, and this direction allows any visual impairment to be evaluated. Since pain, photophobia, and glare sensitivity may be disabling following corneal transplant, we propose a minimum of evaluation of ten percent if those symptoms are present.

The current schedule uses 19 different diagnostic codes to designate impairment of central visual acuity, and some designate more than one level of visual acuity, e.g., diagnostic code 6078 designates six different levels. No useful purpose is served by this large number of codes, and we propose to decrease the number to six for more ease of use.

We propose to retain separate codes for anatomical loss of both eyes (diagnostic code 6061); for light perception only, both eyes (diagnostic code 6062); for anatomical loss of one eye (diagnostic code 6063); for light perception only, one eye, (diagnostic code 6064); for vision in one eye 5/200 (1.5/60) (diagnostic code 6065); and for impairment of visual acuity 10/200 (3/60) or better (diagnostic code 6066). In addition, we propose to remove the term ''blindness'' from the titles of diagnostic codes 6062 and 6064 in favor of the terms ''light perception only, both eyes'' and ''light perception only, one eye,'' respectively because the term ''blindness,'' as used in 38 U.S.C. 1114, ''Rates of wartime disability compensation,'' has more than one meaning, and using it in the rating schedule to refer to only one level of visual impairment promotes confusion.

In the current rating schedule, footnote number five, attached to diagnostic codes 6061–63 and 6067–71, refers to entitlement to SMC, and footnote number six, attached to diagnostic codes 6064–66, refers both to entitlement to SMC and to evaluation when there is inability to wear a prosthesis following anatomical loss of an eye. (Footnotes number five and six are currently the only footnotes in this section.) We have discussed above our proposal to remove the part of the footnote that addresses the inability to wear a prosthesis. We propose to place the material concerning SMC in footnote number one, following diagnostic code 6066 and also following diagnostic code 6080. We propose to remove footnotes five and six and to attach footnote number one to diagnostic codes 6061 through 6064, under diagnostic code 6065 at the 100 percent evaluation for ''vision in one eye 5/200, in the other eye 5/200,'' and under diagnostic code 6080 at ''visual field, concentric contraction of, to 5 degrees'' (because concentric contraction of the visual field to five degrees is the equivalent of 5/200, and must also be considered for SMC (see 38 CFR 3.350)). This combination of footnotes and paragraph (f) of § 4.75 referring to SMC is, in our opinion, the best way to ensure complete review for SMC.

We propose to update the subpart title ''Ratings for Impairment of Field of Vision'' to ''Ratings for Impairment of Visual Fields'' and the title of diagnostic code 6080 from ''Field vision, impairment of'' to ''Visual field defects,'' in accordance with current usage. In order to make the evaluations for visual field defects under diagnostic code 6080 more comprehensive, as suggested by our consultants, we propose to add evaluations for loss of superior and inferior altitudinal fields. Inferior field loss will be evaluated at 10 percent for the unilateral and 30 percent for the bilateral condition (or impaired visual acuity of 20/70 (6/21) for each affected eye), and superior field loss will be evaluated at 10 percent for both the unilateral and bilateral conditions (or impaired visual acuity of 20/50 (6/15) for each affected eye). For the sake of accuracy, we propose, under diagnostic code 6080, to make 10 percent (or impaired visual acuity of 20/50 (6/15) for each affected eye), instead of 20 percent, the evaluation for unilateral or bilateral condition for both concentric contraction to 46 to 60 degrees and for loss of the nasal half of the visual field. This will correct the bilateral percentage evaluation, currently indicated to be 20 percent for these conditions, because both bilateral and unilateral visual acuity of 20/50 warrant a 10-percent, not a 20-percent, evaluation. Notes one and two, currently following diagnostic code 6080, discuss the requirements for correct diagnosis, demonstrable pathology, and contraction within the stated degrees for concentric contraction ratings. We propose to delete these notes because similar information is contained in § 4.1, proposed § 4.77(a), and under diagnostic code 6080, and they are therefore redundant.

We propose to revise the evaluation criteria for diagnostic code 6081, ''scotoma, unilateral,'' which currently provide a minimum 10-percent evaluation for a large or centrally located scotoma, by changing ''large'' to ''affecting at least one-quarter of the visual field (quadrantanopsia).'' This language is clearer, and the term ''quadrantanopsia,'' is widely accepted. We propose that evaluation otherwise be based on visual impairment, which is not a substantive change from the current direction to ''rate on loss of central visual acuity or impairment of field vision.''

Symblepharon (diagnostic code 6091) is currently rated under the criteria for diagnostic code 6090 (diplopia). However, it may also result in other types of impairments, and we therefore propose to direct that it be evaluated on visual impairment, lagophthalmos (diagnostic code 6022), disfigurement (diagnostic code 7800), etc.

Diplopia is currently evaluated under diagnostic code 6090 and also under diagnostic code 6092, which is described as ''diplopia, due to limited muscle function'' and evaluated according to the criteria under diagnostic code 6090. We propose to eliminate diagnostic code 6092 because diplopia due to limited muscle function is not functionally distinct from diplopia (double vision) and does not warrant a separate code. As stated above, we propose to delete the note following diagnostic code 6090 regarding a citing of the correct diagnosis as redundant.

For purposes of clarity, we propose to make numerous additional nonsubstantive changes in this document.

The Secretary hereby certifies that this regulatory amendment will not have a significant economic impact on a substantial number of small entities as they are defined in the Regulatory Flexibility Act, 5 U.S.C. 601–612. The reason for this certification is that this amendment would not directly affect any small entities. Only VA beneficiaries could be directly affected. Therefore, pursuant to 5 U.S.C. 605(b), this amendment is exempt from the initial and final regulatory flexibility analysis requirements of sections 603 and 604. This regulation has been reviewed by the Office of Management and Budget under Executive Order 12866.

The Catalog of Federal Domestic Assistance numbers are 64.104 and 64.109.

List of Subjects in 38 CFR Part 4

Disability benefits, Individuals with disabilities, Pensions, Veterans.

Approved: December 14, 1998.

Togo D. West, Jr.,

Secretary of Veterans Affairs.

For the reasons set out in the preamble, 38 CFR part 4, subpart B, is proposed to be amended as set forth below:

PART 4—SCHEDULE FOR RATING DISABILITIES

1. The authority citation for part 4 continues to read as follows:

Authority: 38 U.S.C. 1155.

Subpart B—Disability Ratings

2. Sections 4.75 and 4.76 are revised to read as follows:

§ 4.75 General considerations for evaluating visual impairment.

(a) *Visual impairment.* The evaluation of visual impairment is based on impairment of visual acuity (excluding developmental errors of refraction), visual field, and muscle function.

(b) *Examination for visual impairment.* To be adequate for VA purposes, an examination to evaluate visual impairment must be conducted by a licensed optometrist or

ophthalmologist. The examiner must identify the disease, injury, or other pathologic process responsible for any visual impairment found. Examinations for the evaluation of visual fields or muscle function will be conducted only when there is a medical indication of disease or injury that may be associated with visual field defect or impaired muscle function. The fundus must be examined with the veteran's pupils dilated (unless medically contraindicated).

(c) *Service-connected visual impairment of only one eye.* If visual impairment of only one eye is service-connected, either directly or by aggravation, the visual acuity of the non-service-connected eye shall be considered to be 20/40 for evaluation purposes, subject to the provisions of § 3.383(a) of this chapter.

(d) *Maximum evaluation for visual impairment of one eye.* The evaluation for visual impairment of one eye shall not exceed 30 percent unless there is anatomical loss of the eye. The evaluation for visual impairment of one eye may, however, be combined with evaluations for other disabilities, e.g., disfigurement, that are not based on visual impairment.

(e) *Anatomical loss of one eye with inability to wear a prosthesis.* When there is anatomical loss of one eye, the evaluation for visual acuity under diagnostic code 6063 shall be increased by 10 percent if the veteran is unable to wear a prosthesis, but the maximum evaluation shall not exceed 100 percent.

(f) *Special monthly compensation.* When evaluating any claim involving visual impairment, the rating agency shall refer to § 3.350 of this chapter to determine whether the veteran may be entitled to special monthly compensation. Footnotes in the schedule indicate levels of visual impairment that potentially establish entitlement to special monthly compensation; however, other levels of visual impairment combined with disabilities of other body systems may also establish entitlement.

(Authority: 38 U.S.C. 1155 and 1114)

§ 4.76 Visual acuity.

(a) *Examination of visual acuity.* To be adequate for VA purposes, an examination to evaluate visual acuity must record *uncorrected* and *corrected* visual acuity for *distance* and *near,* as determined using Snellen's test type or its equivalent.

(b) *Evaluation of visual acuity.* (1) For VA purposes, visual acuity shall generally be evaluated on the basis of corrected distance vision. However, when the lens required to correct distance vision in the poorer eye differs by more than three diopters from the lens required to correct distance vision in the better eye, and the difference is not due to congenital or developmental refractive error, the visual acuity of the poorer eye for evaluation purposes shall be either its uncorrected visual acuity or its visual acuity as corrected by a lens that does not differ by more than three diopters from the lens needed for correction of the other eye, whichever results in better combined visual acuity.

(2) Provided that he or she customarily wears contact lenses, VA shall evaluate the visual acuity of any individual affected by a corneal disorder that results in severe irregular astigmatism that can be improved more by contact lenses than by eyeglass lenses, as corrected by contact lenses.

(3) In any case where the examiner reports that there is a difference equal to two or more scheduled steps between near and distance corrected vision, with the near vision being worse, the examination report must include at least two recordings of near and distance corrected vision and explain the reason for the difference. Evaluation in those cases will be based on distance vision adjusted to one step poorer than measured.

§ 4.76a [Removed]

3. Section 4.76a is removed.

4. Sections 4.77, 4.78 and 4.79 are revised to read as follows:

§ 4.77 Visual fields.

(a) *Examination of visual fields.* To be adequate for VA purposes, examinations of visual fields must be conducted using a Goldmann kinetic perimeter or equivalent kinetic method, using a standard target size and luminance (Goldmann's equivalent (III/4-e)). At least two recordings of visual fields must be made, and the examination must be supplemented by the use of a tangent screen when the examiner indicates it is necessary. At least 16 meridians 22½ degrees apart must be charted for each eye (see Figure 1). See Table III for the normal extent of the visual fields (in degrees) at the 8 principal meridians (45 degrees apart). The confirmed visual fields shall be made a part of the examination report.

(b) *Evaluation of visual fields.* The average concentric contraction of the visual field of each eye is determined by measuring the remaining visual field (in degrees) at each of eight principal meridians 45 degrees apart, adding them, and dividing the sum by eight.

(c) *Combination of visual field defect and decreased visual acuity.* To determine the evaluation for visual impairment when both decreased visual acuity and visual field defect are present in one or both eyes, the rating agency shall combine the evaluations for visual acuity and visual field defect (expressed as a level of visual acuity) (see § 4.25).

(Authority: 38 U.S.C. 1155)

§ 4.78 Muscle function.

(a) *Examination of muscle function.* To be adequate for VA purposes, measurement of muscle function must be performed using a Goldmann Perimeter Chart which identifies the four major quadrants, (upward, downward, left and right lateral) and the central field (20 degrees or less) (see Figure 2). The examiner will chart the areas in which diplopia exists and include the plotted chart in the examination report.

(b) *Evaluation of muscle function.* (1) An evaluation for diplopia shall be assigned to only one eye. When both diplopia and decreased visual acuity or visual field defect are present in an individual, the rating agency shall assign a level of corrected visual acuity for the poorer eye (or the affected eye, if only one eye is service-connected), that is: one step poorer than it would otherwise warrant if the evaluation for diplopia under diagnostic code 6090 is 20/70 or 20/100; two steps poorer if the evaluation under diagnostic code 6090 is 20/200 or 15/200; and three steps poorer if the evaluation under diagnostic code 6090 is 5/200. These adjusted levels of corrected visual acuity, however, shall not exceed a level of 5/200. The percentage evaluation for visual impairment shall then be determined under diagnostic codes 6064 through 6066, using the adjusted visual acuity for the poorer eye (or the affected eye), and the corrected visual acuity for the better eye.

(2) When diplopia is present in more than one quadrant or range of degrees, the rating agency shall evaluate diplopia on the quadrant and degree range that provides the highest evaluation.

(3) When diplopia exists in two separate areas of the same eye, the equivalent visual acuity under diagnostic code 6090 shall be increased to the next poorer level of visual acuity, but not to exceed 5/200.

(Authority: 38 U.S.C. 1155)

§ 4.79 Schedule of ratings—eye.

DISEASES OF THE EYE

	Rating
6000 Choroidopathy, including uveitis, iritis, cyclitis, and choroiditis	
6001 Keratopathy	
6002 Scleritis	
6006 Retinopathy or maculopathy	
6007 Intraocular hemorrhage	
6008 Detachment of retina	
6009 Unhealed eye injury	

GENERAL RATING FORMULA FOR DIAGNOSTIC CODES 6000 THROUGH 6009

	Rating
Evaluate on the basis of either visual impairment or incapacitating episodes, whichever results in a higher evaluation.	
With incapacitating episodes of at least six weeks total duration per year	60
With incapacitating episodes of at least four weeks, but less than six weeks, total duration per year	40
With incapacitating episodes of at least two weeks, but less than four weeks, total duration per year	20
With incapacitating episodes of at least one week, but less than two weeks, total duration per year	10
Note: For VA purposes, an incapacitating episode is a period of acute symptoms severe enough to require bed rest and treatment by a physician or other healthcare provider.	
6010 Tuberculosis of eye:	
Active:	100
Inactive: Rate under §§ 4.88c or 4.89 of this part, whichever is appropriate.	
6011 Retinal scars, atrophy, or irregularities:	
Localized scars, atrophy, or irregularities of the retina, unilateral or bilateral, that are centrally located and that result in an irregular, duplicated, enlarged, or diminished image	10
Otherwise, evaluate on visual impairment.	
6012 Angle-closure glaucoma:	
Evaluate on the basis of either visual impairment or incapacitating episodes, whichever results in a higher evaluation.	
Minimum evaluation if continuous medication is required	10
With incapacitating episodes of at least six weeks total duration per year	60
With incapacitating episodes of at least four weeks, but less than six weeks, total duration per year	40
With incapacitating episodes of at least two weeks, but less than four weeks, total duration per year	20
Note: For VA purposes, an incapacitating episode is a period of acute symptoms severe enough to require bed rest and treatment by a physician or other healthcare provider.	
6013 Open-angle:	
Evaluate on visual impairment.	
Minimum evaluation if continuous medication is required	10
6014 Malignant neoplasms (eyeball only):	
Note (1): If a malignant neoplasm of the eyeball requires therapy that is comparable to that used for systemic malignancies, i.e., systemic chemotherapy, X-ray therapy more extensive than to the area of the eye, or surgery more extensive than enucleation, a rating of 100 percent shall be assigned that shall continue beyond the cessation of any surgical, X-ray, antineoplastic chemotherapy or other therapeutic procedure. Six months after discontinuance of such treatment, the appropriate disability rating shall be determined by mandatory VA examination. Any change in evaluation based upon that or any subsequent examination shall be subject to the provisions of § 3.105(e) of this chapter. If there has been no local recurrence or metastasis, rate on residuals.	
Note (2): To evaluate residuals, or malignant neoplasms that do not require therapy comparable to that for systemic malignancies, evaluate visual impairment and nonvisual impairment, e.g., disfigurement (diagnostic code 7800), separately and combine the evaluations.	
6015 Benign neoplasms (of eyeball and adnexa):	
Evaluate visual impairment and nonvisual impairment, e.g., disfigurement (diagnostic code 7800), separately and combine the evaluations.	
6016 Nystagmus, central	10
6017 Trachomatous conjunctivitis:	
Active: Evaluate on visual impairment, minimum	30
Inactive: Evaluate on residuals, such as visual impairment and disfigurement (diagnostic code 7800).	
6018 Chronic conjunctivitis (nontrachomatous):	
Active (with objective findings, such as red, thick conjunctivae, Mucous secretion, etc.)	10
Inactive: Evaluate on residuals, such as visual impairment and disfigurement (diagnostic code 7800).	
6019 Ptosis, unilateral or bilateral:	
Evaluate on visual impairment, or; in the absence of visual impairment, evaluate on disfigurement (diagnostic code 7800).	
6020 Ectropion:	
Bilateral	20
Unilateral	10
6021 Entropion:	
Bilateral	20
Unilateral	10
6022 Lagophthalmos:	
Bilateral	20
Unilateral	10
6023 Loss of eyebrows, complete, unilateral or bilateral	10
6024 Loss of eyelashes, complete, unilateral or bilateral	10
6025 Disorders of the lacrimal apparatus (epiphora, dacryocystitis, etc.):	

GENERAL RATING FORMULA FOR DIAGNOSTIC CODES 6000 THROUGH 6009—Continued

	Rating
Bilateral	20
Unilateral	10
6026 Optic neuropathy:	
Evaluate on visual impairment.	
6027 Cataract of any type:	
Preoperative:	
Evaluate on visual impairment.	
Postoperative:	
If a replacement lens is present (pseudophakia), evaluate on visual impairment. If there is no replacement lens, evaluate on aphakia.	
6029 Aphakia or dislocation of crystalline lens:	
Evaluate on visual impairment, and elevate the resulting level of visual impairment one step.	
Minimum (unilateral or bilateral)	30
6030 Paralysis of accommodation (due to neuropathy of the Oculomotor Nerve)	20
6032 Loss of eyelids, partial or complete:	
Evaluate both visual impairment and nonvisual impairment, e.g., disfigurement (diagnostic code 7800), separately and combine the evaluations.	
6034 Pterygium:	
Evaluate on visual impairment, disfigurement (diagnostic code 7800), conjunctivitis (diagnostic code 6018), etc.	
6035 Keratoconus:	
Evaluate loss of visual acuity.	
6036 Status post corneal transplant	
Evaluate visual impairment.	
Minimum, if there is pain, photophobia, and glare sensitivity	10
6037 Pinguecula:	
Evaluate on disfigurement (diagnostic code 7800).	
Impairment of Central Visual Acuity:	
6061 Anatomical loss both eyes [1]	100
6062 Light perception only, in both eyes [1]	100
6063 Anatomical loss of one eye: [1]	
In the other eye 5/200 (1.5/60)	100
In the other eye 10/200 (3/60)	90
In the other eye 15/200 (4.5/60)	80
In the other eye 20/200 (6/60)	70
In the other eye 20/100 (6/30)	60
In the other eye 20/70 (6/21)	60
In the other eye 20/50 (6/15)	50
In the other eye 20/40 (6/12)	40
6064 Light perception only, in one eye: [1]	
In the other eye 5/200 (1.5/60)	100
In the other eye 10/200 (3/60)	90
In the other eye 15/200 (4.5/60)	80
In the other eye 20/200 (6/60)	70
In the other eye 20/100 (6/30)	60
In the other eye 20/70 (6/21)	50
In the other eye 20/50 (6/15)	40
In the other eye 20/40 (6/12)	30
6065 Vision in one eye 5/200 (1.5/60):	
In the other eye 5/200 (1.5/60)	[1] 100
In the other eye 10/200 (3/60)	90
In the other eye 15/200 (4.5/60)	80
In the other eye 20/200 (6/60)	70
In the other eye 20/100 (6/30)	60
In the other eye 20/70 (6/21)	50
In the other eye 20/50 (6/15)	40
In the other eye 20/40 (6/12)	30
6066 Visual acuity in one eye 10/200 (3/60) or better	
Vision in one eye 10/200 (3/60):	
In the other eye 10/200 (3/60)	90
In the other eye 15/200 (4.5/60)	80
In the other eye 20/200 (6/60)	70
In the other eye 20/100 (6/30)	60
In the other eye 20/70 (6/21)	50
In the other eye 20/50 (6/15)	40
In the other eye 20/40 (6/12)	30
Vision in one eye 15/200 (4.5/60):	
In the other eye 15/200 (4.5/60)	80
In the other eye 20/200 (6/60)	70
In the other eye 20/100 (6/30)	60
In the other eye 20/70 (6/21)	40
In the other eye 20/50 (6/15)	30
In the other eye 20/40 (6/12)	20

GENERAL RATING FORMULA FOR DIAGNOSTIC CODES 6000 THROUGH 6009—Continued

	Rating
Vision in one eye 20/200 (6/60):	
In the other eye 20/200 (6/60)	70
In the other eye 20/100 (6/30)	60
In the other eye 20/70 (6/21)	40
In the other eye 20/50 (6/15)	30
In the other eye 20/40 (6/12)	20
Vision in one eye 20/100 (6/30):	
In the other eye 20/100 (6/30)	50
In the other eye 20/70 (6/21)	30
In the other eye 20/50 (6/15)	20
In the other eye 20/40 (6/12)	10
Vision in one eye 20/70 (6/21):	
In the other eye 20/70 (6/21)	30
In the other eye 20/50 (6/15)	20
In the other eye 20/40 (6/12)	10
Vision in one eye 20/50 (6/15):	
In the other eye 20/50 (6/15)	10
In the other eye 20/40 (6/12)	10
Vision in one eye 20/40 (6/12):	
In the other eye 20/40 (6/12)	0

[1] Review for entitlement to special monthly compensation under § 3.350 of this chapter.

RATINGS FOR IMPAIRMENT OF VISUAL FIELDS

	Rating
6080 Visual field defects:	
Homonymous hemianopsia	30
Loss of temporal half of visual field:	
Bilateral	30
Unilateral	10
Or rate each affected eye as 20/70 (6/21).	
Loss of nasal half of visual field:	
Bilateral	10
Unilateral	10
Or rate each affected eye as 20/50 (6/15).	
Loss of inferior half of visual field:	
Bilateral	30
Unilateral	10
Or rate each affected eye as 20/70 (6/21).	
Loss of superior half of visual field:	
Bilateral	10
Unilateral	10
Or rate each affected eye as 20/50 (6/15).	
Concentric contraction of visual field:	
With remaining field of 5 degrees[1]	
Bilateral	100
Unilateral	30
Or rate each affected eye as 5/200 (1.5/60).	
With remaining field of 6 to 15 degrees:	
Bilateral	70
Unilateral	20
Or rate each affected eye as 20/200 (6/60).	
With remaining field of 16 to 30 degrees:	
Bilateral	50
Unilateral	10
Or rate each affected eye as 20/100 (6/30).	
With remaining field of 31 to 45 degrees:	
Bilateral	30
Unilateral	10
Or rate each affected eye as 20/70 (6/21).	
With remaining field of 46 to 60 degrees:	
Bilateral	10
Unilateral	10
Or rate each affected eye as 20/50 (6/15).	
6081 Scotoma, unilateral:	
Minimum, with scotoma affecting at least one-quarter of the visual field (quadrantanopsia) or with centrally located scotoma of any size	10
Otherwise, evaluate on visual impairment.	

[1] Review for entitlement to special monthly compensation under § 3.350 of this chapter.

RATINGS FOR IMPAIRMENT OF MUSCLE FUNCTION

Degree of diplopia	Equivalent visual acuity
6090 Diplopia (double vision):	
(a) Central 20 degrees	5/200 (1.5/60)
(b) 21 degrees to 30 degrees:	
(1) Down	15/200 (4.5/60)
(2) Lateral	20/100 (6/30)
(3) Up	20/70 (6/21)
(c) 31 degrees to 40 degrees:	
(1) Down	20/200 (6/60)
(2) Lateral	20/70 (6/21)
(3) Up	20/40 (6/12)
6091 Symblepharon:	
Evaluate on visual impairment, lagophthalmos (diagnostic code 6022), disfigurement (diagnostic code 7800), etc., depending on particular findings in individual case.	

(Authority: 38 U.S.C 1155)

§§ 4.80, 4.83 and 4.84 [Removed and Reserved]

5. Sections 4.80, 4.83 and 4.84 are removed and reserved.

§§ 4.83a and 4.84a [Removed]

6. Sections 4.83a and 4.84a are removed.

[FR Doc 99–11771 Filed 5–10–99; 8:45 am]

BILLING CODE 8320–01–P

ENVIRONMENTAL PROTECTION AGENCY

40 CFR Part 271

[FRL–6339–2]

New Jersey: Authorization of State Hazardous Waste Program

AGENCY: Environmental Protection Agency (EPA).

ACTION: Proposed rule.

SUMMARY: Pursuant to the Resource Conservation and Recovery Act, as amended, 42 U.S.C. 6901 *et seq.* (''RCRA''), and the regulations thereunder, the State of New Jersey (the ''State'') has applied for final authorization of its hazardous waste program adopted in October 1996. The Environmental Protection Agency, Region 2 (''EPA'') has reviewed the State's application and has made a decision, subject to EPA's receipt and evaluation of public comment, that the State's hazardous waste program satisfies all of the requirements necessary to qualify for final authorization. Accordingly, EPA proposes to approve and authorize the State's hazardous waste program.

DATES: Comments on this proposed rule must be received by the close of business on June 10, 1999.

ADDRESSES: Written comments should be sent to Ms. Kathleen C. Callahan, Director, Division of Environmental Planning and Protection, U.S. EPA, Region II, 290 Broadway, New York, New York 10007–1866, (212) 637–3724.

Copies of the State's application for authorization are available for inspection and copying as follows:

The New Jersey Department of Environmental Protection (''NJDEP'')
- Address: Public Access Center, NJDEP, 401 East State Street, 1st Floor, Trenton, NJ 08625
- Hours: Monday through Friday (excluding holidays), 8:30AM–1:00PM, 2:00PM–4:30PM
- Telephone: (609) 777–3373

EPA
- Address: EPA's Library, 16th Floor, 290 Broadway, New York, NY 10007–1866
- Hours: Monday through Thursday (excluding holidays), 9:00AM–4:30PM, Friday (excluding holidays), 9:00AM–1:00PM
- Telephone: (212) 637–3185

FOR FURTHER INFORMATION CONTACT: Call Elizabeth Butler at (212) 637–4163.

Summary

I. State Authorization Under RCRA

Pursuant to section 3006 of RCRA, 42 U.S.C. 6926, EPA may, upon application by a state, authorize the applicant state's hazardous waste program to operate in the state in lieu of the federal hazardous waste program. The federal hazardous waste program (the ''Federal Program'') is comprised of the regulations published in Title 40 of the Code of Federal Regulations under the authority of RCRA. To qualify for final authorization, a state's hazardous waste program must: (1) be equivalent with the Federal Program; (2) be consistent with the Federal Program; and (3) provide for adequate enforcement. RCRA section 3006(b), 42 U.S.C. 6926(b).

II. Background—History of RCRA Authorization Within the State

In 1985, the State was granted final authorization by EPA for the RCRA base program, effective February 21, 1985 (50 FR 5260, 2/7/85). At that time the base program covered the essential core of the Federal Program as reflected in the initial enactment of RCRA prior to its amendment by the Hazardous and Solid Waste Amendments of 1984. In 1988 and 1993 EPA authorized the State for a small number of additional regulations (53 FR 30054, 8/10/88, and 58 FR 59370, 11/9/93).

On October 21, 1996, the State repealed its then existing hazardous waste program, including the authorized provisions, and adopted a new program (N.J.A.C. 7:26G–1.1 *et seq.*, 28 New Jersey Register 4606, 10/21/96). As part of this October 21, 1996 adoption, the State adopted, with certain exceptions and modifications, 40 CFR parts 124, 260–266, 268 and 270 as set forth in the July 1, 1993 CFR, by incorporation by reference, and designated these provisions N.J.A.C. 7:26G–4 through N.J.A.C. 7:26G–13, inclusive. (28 New Jersey Register 4652–4668, 10/21/96. N.J.A.C. 7:26G–4 through N.J.A.C. 7:26G–13 are referred to below as the ''State Program''). Under cover of a letter dated January 13, 1999, the State submitted an application meeting the requirements of 40 CFR part 271, requesting authorization of the State Program.[1]

[1] The State's redesignation of the Parts of the Federal Program adopted by incorporation by reference on October 21, 1996, and comprising the State Program, is as follows: N.J.A.C. 7:26G–4 (40 CFR part 260); N.J.A.C. 7:26G–5 (40 CFR part 261); N.J.A.C. 7:26G–6 (40 CFR part 262); N.J.A.C. 7:26G–7 (40 CFR part 263); N.J.A.C. 7:26G–8 (40 CFR part 264); N.J.A.C. 7:26G–9 (40 CFR part 265); N.J.A.C.

III. Decision

A. Proposed Authorization

EPA has reviewed the State's application and has determined that the State Program, with limited exceptions, possesses the requisite equivalence and consistency with the Federal Program. Furthermore, the State's application indicates that the State possesses the necessary enforcement resources and is prepared to utilize those resources to provide adequate enforcement of the State Program. Accordingly, EPA has determined that the State Program qualifies for authorization and is proposing today, subject to public comment, to authorize the State Program, with the exceptions noted below.

In several instances the State has not incorporated a federal regulation by reference and has not adopted a substitute regulation. These instances are all clearly indicated in the State's October 21, 1996 adoption. None of these omitted federal regulations, however, are required to be adopted for authorization, for various reasons including, for example, that they are not applicable or delegable to states. Thus, the State's failure to either adopt these particular federal regulations, or to adopt substitute regulations, in no way impairs the equivalence or consistency of the State Program.

EPA notes that its determination to authorize the State Program is based on the information submitted to EPA by the State. If, after public comment, EPA authorizes the State Program, should the criteria upon which EPA bases its approval subsequently change for any reason, including without limitation changes in State laws, regulations or administrative procedures which negate the equivalency or consistency of one or more provisions of the State Program, or in any way limit the State's ability to enforce or properly administer the State Program, EPA may revisit its approval. In such event, EPA may exercise its authority, provided in 40 CFR 271.22, to afford the State an opportunity to correct any program deficiencies, or EPA may withdraw authorization of the State Program, in whole or in part. Furthermore, ultimate authorization of the State Program by EPA shall not be deemed in any way as a waiver by EPA of any of its statutory rights under RCRA including but not limited to sections 3004(v), 3005(c)(3), 3007, 3008, 3013, 3020(c) and 7003 (42 U.S.C. 6924(v), 6925(c)(3), 6927, 6928, 6934, 6939b(c) and 6973).

B. Exceptions

In N.J.A.C. 7:26G–8.1(a), the State incorporates by reference 40 CFR part 264 , the part of the Federal Program fixing the standards for the owners and operators of hazardous waste treatment, storage and disposal facilities. In the remaining subparagraphs of 7:26G–8.1 [(b) through (h)] the State neither omits 40 CFR 264.101, 264.552 and 264.553, nor adopts these federal regulations with modifications. Thus, the State has adopted 40 CFR 264.101, 264.552 and 264.553 by means of incorporation by reference through 7:26G–8.1(a). The above three sections of the Federal Program are the sections implementing the corrective action provisions of RCRA, which provisions were incorporated into RCRA upon the enactment of the Hazardous and Solid Waste Amendments of 1984. The State, despite its adoption of 40 CFR 264.101, 264.552 and 264.553, informed EPA in its application that it was not applying for authorization for corrective action at this time, and would apply for corrective action authorization under a separate application in the future. Accordingly, while EPA is today proposing to authorize N.J.A.C. 7:26G–8.1(a), EPA is not proposing to authorize the State for corrective action at this time, and 40 CFR 264.101, 264.552 and 264.553 shall remain in full force and effect. Consequently, until the State is authorized for corrective action, EPA shall continue to issue corrective action permits within the State.

In N.J.A.C. 7:26G–12.1(a), the State incorporates by reference 40 CFR 270.73(a) and (b). The State, however, does not incorporate by reference 40 CFR 270.73(c)–(g). Rather, the State replaces these subparagraphs of 40 CFR 270.73 with 7:26G–12.1(c)(16). Title 40 CFR 270.73 is the regulation in the Federal Program governing the loss of interim status (RCRA section 3005(c)(2)(C) and (e)(2)(3), 42 U.S.C. 6925(c)(2)(C) and (e)(2)(3)). N.J.A.C. 7:26G–12.1(c)(16) provides that the State may terminate interim status at its discretion, under a variety of circumstances subject to a hearing, if requested. By contrast, the federal loss of interim status regulations, excluded by the State and replaced by 7:26G–12.1(c)(16), are non-discretionary and operate automatically, without the opportunity for a hearing, if the requirements cited in these federal provisions are not met. Since 7:26G–12.1(c)(16) is discretionary and lacks automatic application, it is not equivalent to 40 CFR 270.73(c)–(g), is less stringent than 40 CFR 270.73(c)–(g), and therefore, cannot be authorized. Consequently, EPA is not proposing to authorize the State for N.J.A.C. 7:26G–12.1(c)(16), and 40 CFR 270.73(c)–(g) shall remain in full force and effect.

IV. Regulatory Requirements

A. Unfunded Mandates Reform Act

Title II of the Unfunded Mandates Reform Act of 1995 (''UMRA''), Public Law 104–4, establishes requirements for federal agencies to assess the effects of certain regulatory actions on state, local, and tribal governments, and upon the private sector. Under section 202 of UMRA, EPA must prepare a budgetary impact statement to accompany any proposed or final rule that includes a federal mandate that may result in estimated costs to state or local governments in the aggregate, or to the private sector, of $100 million or more. EPA has determined that today's proposed rule does not include a federal mandate that may result in estimated costs of $100 million or more to either state or local governments in the aggregate, or to the private sector. This federal action approves preexisting requirements of State law, and imposes no new requirements. Accordingly, no additional costs to State or local governments, or to the private sector, result from this action.

UMRA, section 203, further provides that before EPA establishes any regulatory requirements that may significantly or uniquely affect small governments it must develop a small government agency plan. The plan must provide for notifying potentially affected small governments, enabling officials of such governments to have meaningful and timely input in the development of EPA regulatory proposals with significant federal intergovernmental mandates, and informing, educating, and advising small governments on compliance with the regulatory requirements. Like section 202, the requirements of section 203 of UMRA do not apply to today's proposed rule, since this rule contains no regulatory requirements that might significantly or uniquely affect small governments. Although small governments may be hazardous waste generators, transporters, or own and/or operate treatment, storage or disposal facilities, they are already subject to the regulatory requirements under existing State law which are proposed to be authorized by EPA, and thus, are not subject to any additional significant or unique requirements by virtue of today's proposed authorization of the State Program.

7:26G–10 (40 CFR part 266); N.J.A.C. 7:26G–11 (40 CFR part 268); N.J.A.C. 7:26G–12 (40 CFR part 270); and N.J.A.C. 7:26G–13 (40 CFR part 124).

B. Certification Under the Regulatory Flexibility Act

Pursuant to the Regulatory Flexibility Act (5 U.S.C. 601 *et seq.*, as amended by the Small Business Regulatory Enforcement Fairness Act of 1996), whenever an agency is required to publish a notice of rulemaking for any proposed or final rule, it must prepare and make available for public comment a regulatory flexibility analysis that describes the effect of the rule on small entities (i.e., small businesses, small organizations, and small governmental jurisdictions). This analysis is unnecessary, however, if the agency's administrator certifies that the rule will not have a significant economic impact on a substantial number of small entities.

EPA has determined that today's proposed rule will not have a significant economic impact on a substantial number of small entities. Such small entities which are hazardous waste generators, transporters, or which own and/or operate treatment, storage or disposal facilities are already subject to the regulatory requirements of existing State law which EPA proposes to authorize. EPA's proposed authorization therefore, will not add any burdens, since authorization will result only in an administrative change, rather than a change in the substantive requirements imposed on these small entities.

Accordingly, pursuant to 5 U.S.C. 605(b), I hereby certify that authorization of the State Program will not have a significant economic impact on a substantial number of small entities. This authorization approves regulatory requirements under existing State law to which small entities are already subject. It does not impose any new burdens on small entities. This rule, therefore, does not require a regulatory flexibility analysis.

C. Paperwork Reduction Act

Under the Paperwork Reduction Act, 44 U.S.C. 3501 *et seq.*, federal agencies must consider the paperwork burden imposed by any information request contained in a proposed or final rule. Authorization of the State Program will not impose any additional information requirements upon the regulated community.

D. National Technology Transfer and Advancement Act

The National Technology Transfer and Advancement Act of 1995 (''NTTAA''), Public Law 104–113, section 12(d) (15 U.S.C. 272 note, *Utilization of Consensus Technical Standards by Federal Agencies*) directs all federal agencies to use voluntary consensus standards in its regulatory activities unless to do so would be inconsistent with applicable law or otherwise impractical. Voluntary consensus standards are technical standards (e.g., materials specifications, test methods, sampling procedures, and business practices) that are developed or adopted by voluntary consensus standards bodies. The NTTAA directs federal agencies to provide Congress, through the Office of Management and Budget, with an explanation in any instance where they decide not to use available and applicable voluntary consensus standards. Authorization of the State Program does not involve technical standards. Therefore, EPA did not consider the use of any voluntary consensus standards.

E. Compliance With Executive Order 12866

The Office of Management and Budget has exempted this proposed rule from the requirements of section 6 of E.O. 12866.

F. Compliance With Executive Order 12875

E.O. 12875 is intended to develop an effective process to permit elected officials and other representatives of state or local governments to provide meaningful input in the development of regulatory proposals containing significant unfunded mandates. Since today's rule proposes authorization of preexisting requirements of State law, no new unfunded mandates result from this action. (See also the discussion under IV.A, above, Unfunded Mandates Reform Act).

G. Compliance With Executive Order 13045

E.O.13045, *Protection of Children from Environmental Health Risks and Safety Risks,* applies only to federal rules that are ''economically significant'' as defined under Executive Order 12866 (i.e., a rule ''that has an annual effect on the economy of $100 million or more or would adversely affect in a material way the economy, a sector of the economy, productivity, competition , jobs, the environment, public health or safety, or State, local, or tribal governments or communities'', E.O. 13045, 62 FR 19885, 4/23/97). EPA has determined that the authorization of the State Program will not have a significant effect on the economy within the meaning of E.O. 12866, since today's rule proposes authorization of preexisting requirements of State law, and imposes no new requirements. (See also IV.A and F above). Accordingly, E.O. 13045 is inapplicable to today's proposed rule.

Authority: This document is issued under the authority of sections 2002(a), 3006 and 7004(b) of RCRA, 42 U.S.C. 6912(a), 6926, 6974(b).

Dated: April 19, 1999.

William J. Muszynski,

Acting Regional Administrator, Region 2.

[FR Doc. 99–11710 Filed 5–10–99; 8:45 am]

BILLING CODE 6560–50–P

CORPORATION FOR NATIONAL AND COMMUNITY SERVICE

45 CFR Part 2505

RIN 3045–AA21

Rules Implementing the Government in the Sunshine Act

AGENCY: Corporation for National and Community Service.

ACTION: Proposed rule.

SUMMARY: These proposed rules will implement provisions of the Government in the Sunshine Act (Sunshine Act). The Sunshine Act applies to meetings of agencies of the United States government that are headed by collegial bodies composed of two or more members, a majority of whom are appointed by the President with the advice and consent of the Senate. The Act provides that meetings, as defined in the Act, shall be held in public except where stated exemptions apply. The Sunshine Act applies to meetings of the Board of Directors of the Corporation for National and Community Service(the Corporation). The Corporation invites comments from the public on these proposed rules.

DATES: The Corporation will consider public comments received on or before July 12, 1999.

ADDRESSES: Comments may be mailed or delivered to Frank Trinity, Associate General Counsel, Corporation for National and Community Service, 1201 New York Avenue NW, Washington, DC 20525, sent by facsimile transmission to (202) 565–2796, or sent electronically to: ftrinity@cns.gov. Copies of all communications received will be available for review at the Corporation by members of the public.

FOR FURTHER INFORMATION CONTACT: Frank Trinity, Associate General Counsel, Corporation for National and Community Service, (202) 606–5000, ext. 256. T.D.D. (202) 565–2799.

This notice may be requested in an alternative format for persons with visual impairments.

SUPPLEMENTARY INFORMATION: The Corporation for National and Community Service (Corporation) is a Government corporation established in 1993 that administers programs under the Domestic Volunteer Service Act of 1973 and the National and Community Service Act of 1990. In 1993, Congress also established the Corporation's Board of Directors (the Board) and directed that members of the Board be appointed by the President and confirmed by the Senate. The Board has several statutory responsibilities, including the review and approval of specific plans and proposals submitted by the Corporation's Chief Executive Officer under the national service laws. To carry out its statutory duties, the Board meets at least three times per year.

The Sunshine Act defines meetings and sets certain requirements for advance public notice of such meetings (5 U.S.C. 552b(e)) and permits agencies to close the meetings to public attendance and to withhold information regarding meetings when an agency finds that any of the ten exemptions enumerated in the Sunshine Act applies, 5 U.S.C. 552b(c). The Sunshine Act provides for procedures that must be followed by agencies in invoking an exemption, 5 U.S.C. 552b(d), (f). The Sunshine Act requires agencies to adopt, after opportunity for public comment, regulations to implement the Sunshine Act, 5 U.S.C. 552b(g). Consistent with this requirement, the Corporation proposes regulations to implement the provisions of 5 U.S.C. 552b(b)–(f). The proposed regulations are intended to follow the exemptions provided in the Sunshine Act and to implement fully the Sunshine Act's procedural requirements regarding public notice of meetings, availability of transcripts or other records of meetings, and closure of meetings.

Executive Order 12866

The Corporation has determined that this regulatory action is not a ''significant'' rule within the meaning of Executive Order 12866 because it is not likely to result in: (1) an annual effect on the economy of $100 million or more, or an adverse and material effect on a sector of the economy, productivity, competition, jobs, the environment, public health or safety, or State, local, or tribal government or communities; (2) the creation of a serious inconsistency or interference with an action taken or planned by another agency; (3) a material alteration in the budgetary impacts of entitlement, grants, user fees, or loan programs or the rights and obligations of recipients thereof; or (4) the raising of novel legal or policy issues arising out of legal mandates, the President's priorities, or the principles set forth in Executive Order 12866.

Regulatory Flexibility Act

The Corporation has determined that this regulatory action will not result in (1) an annual effect on the economy of $100 million or more; (2) a major increase in costs or prices for consumers, individual industries, Federal, State, or local government agencies, or geographic regions; or (3) significant adverse effects on competition, employment, investment, productivity, innovation, or on the ability of United States-based enterprises to compete with foreign-based enterprises in domestic and export markets. Therefore, the Corporation has not performed the initial regulatory flexibility analysis that is required under the Regulatory Flexibility Act (5 U.S.C. 601 *et seq.*) for major rules that are expected to have such results.

Other Impact Analyses

Because the proposed changes do not authorize any information collection activity this regulatory action is not subject to review and approval under the Paperwork Reduction Act of 1995 (44 U.S.C. 3500 *et seq.*).

For purposes of Title II of the Unfunded Mandates Reform Act of 1995, 2 U.S.C. 1531–1538, as well as Executive Order 12875, this regulatory action does not contain any federal mandate that may result in increased expenditures in either Federal, State, local, or tribal governments in the aggregate, or impose an annual burden exceeding $100 million on the private sector.

List of Subjects in 45 CFR Part 2505

Sunshine Act.

For the reasons stated in the preamble, part 2505 of chapter XXV, title 45 of the Code of Federal Regulations is proposed to be added to read as follows:

PART 2505—RULES IMPLEMENTING THE GOVERNMENT IN THE SUNSHINE ACT

Sec.

2505.1 Applicability.
2505.2 Definitions.
2505.3 To what extent are meetings of the Board open to the public?
2505.4 On what grounds may the Board close a meeting or withhold information?
2505.5 What are the procedures for closing a meeting, withholding information, and responding to requests by affected persons to close a meeting?
2505.6 What are the procedures for making a public announcement of a meeting?
2505.7 What are the procedures for changing the time or place of a meeting following the public announcement?

Authority: 5 U.S.C. 552b; 42 U.S.C. 12651c(c)

§ 2505.1 Applicability.

(a) This part implements the provisions of section 3(a) of the Government in the Sunshine Act (5 U.S.C. 552b). These procedures apply to meetings of the Corporation's Board of Directors, or to any subdivision of the Board that is authorized to act on its behalf. The Board of Directors may waive the provisions of this part to the extent authorized by law.

(b) Nothing in this part expands or limits the present rights of any person under the Freedom of Information Act (5 U.S.C. 552), except that the exemptions set forth in § 2505.4 shall govern in the case of any request made pursuant to the Freedom of Information Act to copy or inspect the transcript, recording, or minutes described in § 2505.5.

(c) Nothing is this part authorizes the Corporation to withhold from any individual any record, including transcripts, recordings, or minutes required by this part, which is otherwise accessible to such individual under the Privacy Act (5 U.S.C. 552a).

§ 2505.2 Definitions.

As used in this part:

(a) *Board* means the Board of Directors established pursuant to 42 U.S.C. 12651a, or any subdivision of the Board that is authorized to act on its behalf.

(b) *Chairperson* means the Member elected by the Board to serve as Chairperson.

(c) *General Counsel* means the Corporation's principal legal officer or other attorney acting at the designation of the Corporation's principal legal officer.

(d) *Corporation* means the Corporation for National and Community Service established pursuant to 42 U.S.C. 12651.

(e) *Meeting* means the deliberations of at least a quorum of the Corporation's Board of Directors where such deliberations determine or result in the joint conduct or disposition of official Corporation business. A meeting may be conducted under this part through telephone or similar communications equipment by means of which all participants may communicate with each other. The term meeting includes a portion thereof. The term meeting does not include:

(1) Notation voting or similar consideration of business, whether by circulation of material to the Members individually in writing or by a polling of the members individually by telephone.

(2) Action by a quorum of the Board to—

(i) Open or to close a meeting or to release or to withhold information pursuant to § 2505.5;

(ii) Set an agenda for a proposed meeting;

(iii) Call a meeting on less than seven days' notice as permitted by § 2505.6(b); or

(iv) Change the subject-matter or the determinations to open or to close a publicly announced meeting under § 2505.7(b).

(3) A gathering for the purpose of receiving briefings from the Corporation's staff or expert consultants, provided that Members of the Board do not engage in deliberations at such sessions that determine or result in the joint conduct or disposition of official Corporation business on such matters.

(4) A gathering for the purpose of engaging in preliminary discussions or exchanges of views that do not effectively predetermine official Corporation action on a particular matter.

(f) *Member* means a current member of the Corporation's Board of Directors.

(g) *Presiding Officer* means the Chairperson or, in the absence of the Chairperson, the Vice Chairperson of the Board of Directors or other member authorized to act in this capacity by the Board.

(h) *Quorum* means the number of Members authorized to conduct Corporation business pursuant to the Board's bylaws.

§ 2505.3 To what extent are meetings of the Board open to the public?

The Board shall conduct meetings, as defined in § 2505.2, in accordance with this part. Except as provided in § 2505.4, the Board's meetings shall be open to the public. The public is invited to attend all meetings of the Board that are open to the public but may not participate in the Board's deliberations at such meetings or record any meeting by means of electronic, photographic, or other device.

§ 2505.4 On what grounds may the Board close a meeting or withhold information?

The Board may close a meeting or withhold information that otherwise would be required to be disclosed under §§ 2505.5, 2505.6 and 2505.7 if it properly determines that an open meeting or disclosure is likely to—

(a) Disclose matters that are—

(1) Specifically authorized under criteria established by an Executive order to be kept secret in the interests of national defense or foreign policy; and

(2) In fact properly classified pursuant to such Executive order;

(b) Relate solely to the internal personnel rules and practices of the Corporation;

(c) Disclose matters specifically exempted from disclosure by statute (other than 5 U.S.C. 552), provided that such statute—

(1) Requires that the matters be withheld from the public in such a manner as to leave no discretion on the issue; or

(2) Establishes particular criteria for withholding or refers to particular types of matters to be withheld;

(d) Disclose trade secrets and commercial or financial information obtained from a person and privileged or confidential;

(e) Involve accusing any person of a crime, or formally censuring any person;

(f) Disclose information of a personal nature where disclosure would constitute a clearly unwarranted invasion of personal privacy;

(g) Disclose investigatory records compiled for law enforcement purposes, or information which, if written, would be contained in such records, but only to the extent that the production of such records or information would—

(1) Interfere with enforcement proceedings;

(2) Deprive a person of a right to a fair trial or an impartial adjudication;

(3) Constitute an unwarranted invasion of personal privacy;

(4) Disclose the identity of a confidential source and, in the case of a record compiled by a criminal law enforcement authority in the course of a criminal investigation, or by an agency conducting a lawful national security intelligence investigation, confidential information furnished only by the confidential source;

(5) Disclose investigative techniques and procedures; or

(6) Endanger the life or physical safety of law enforcement personnel;

(h) Disclose information contained in or related to examination, operating or condition reports prepared by, on behalf of, or for the use of an agency responsible for the regulation or supervision of financial institution;

(i) Disclose information the premature disclosure of which would be likely to significantly frustrate implementation of a proposed action of the Corporation, except that this provision shall not apply in any instance where the Corporation has already disclosed to the public the content or nature of its proposed action, or where the Corporation is required by law to make such disclosure on its own initiative prior to taking final action; or

(j) Specifically concerning the Corporation's issuance of a subpoena or the Corporation's participation in a civil action or proceeding, an action in a foreign court or international tribunal, or an arbitration, or the initiation, conduct, or disposition by the Corporation of a particular case of formal adjudication pursuant to the procedures in 5 U.S.C. 554 or otherwise involving a determination on the record after opportunity for a hearing.

§ 2505.5 What are the procedures for closing a meeting, withholding information, and responding to requests by affected persons to close a meeting?

(a) The Board may vote to close a meeting or withhold information pertaining to a meeting. Such action may be taken only when a majority of the entire membership of the Board votes to take such action. A separate vote shall be taken with respect to each action under § 2505.4. The Board may act by taking a single vote with respect to a series of meetings which are proposed to be closed to the public, or with respect to any information concerning a series of meetings, so long as each meeting in the series involves the same particular matters and is scheduled to be held no more than thirty days after the initial meeting in the series. Each Member's vote under this paragraph shall be recorded and no proxies shall be allowed.

(b) If your interests may be directly affected if a meeting is open you may request that the Board close the meeting on one of the grounds referred to in § 2505.4(e), (f), or (g).You should submit your request to the Office of the General Counsel, Corporation for National and Community Service, 1201 New York Avenue NW, Washington, DC 20525. The Board shall, upon the request of any one of its members, determine by recorded vote whether to grant your request.

(c) Within one working day of any vote taken pursuant to this section, the Board shall make publicly available a written copy of such vote reflecting the vote of each Member on the question. If a meeting is to be closed to the public, the Board shall, within one working day, make available a full written explanation of its action closing the meeting and a list of all persons expected to attend the meeting and their affiliation.

(d) For each closed meeting, the General Counsel shall publicly certify that, in his or her opinion, the meeting may be closed to the public and shall state each relevant exemption relied upon. A copy of the certification shall be available for public inspection.

(e) For each closed meeting, the Board shall issue a statement setting forth the time, place, and persons present. A copy of such statement shall be available for public inspection.

(f) (1) For each closed meeting, with the exception of a meeting closed pursuant to § 2505.4(h) or (j), the Board shall maintain a complete transcript or electronic recording adequate to record fully the proceedings of each meeting.

(2) For meetings that are closed pursuant to § 2505.4(h) or (j), the Board may maintain a set of minutes in lieu of a transcript or recording. Such minutes shall fully and clearly describe all matters discussed and shall provide a full and accurate summary of any actions taken, and the reasons therefor, including a description of each of the views expressed on any item and the record of any vote. All documents considered in connection with any action shall be identified in such minutes.

(3) The Corporation shall make promptly available to the public, in a place easily accessible to the public, the transcript, electronic recording, or minutes of the discussion of any item on the agenda, or of any item of the testimony of any witness received at the meeting, except for such item or items of such discussion or testimony as the Corporation determines to contain information which may be properly withheld. Copies of such transcript, or minutes, or a transcription of such recording disclosing the identity of each speaker, shall be furnished to any person at the actual cost of duplication or transcription. The Corporation shall maintain the transcript, recording, or minutes for each closed meeting for at least two years or at least one year after the conclusion of any Corporation business acted upon at the meeting, whichever occurs later.

§ 2505.6 What are the procedures for making a public announcement of a meeting?

(a) For each meeting, the Board shall make a public announcement, at least one week before the meeting, of—

(1) The meeting's time and place;

(2) The matters to be considered;

(3) Whether the meeting is to be open or closed; and

(4) The name and business telephone number of the official designated by the Board to respond to requests for information about the meeting.

(b) The one week advance notice required by paragraph (a) of this section may be reduced only if—

(1) The Board determines by recorded vote that Board business requires that the meeting be scheduled in less than seven days; and

(2) The public announcement required by paragraph (a) of this section is made at the earliest practicable time and posted on the Corporation's home page.

(c) Immediately following a public announcement required by paragraph (a) of this section, the Corporation will submit for publication in the **Federal Register** a notice of the time, place, and subject-matter of the meeting, whether the meeting is open or closed, any change in one of the preceding, and the name and phone number of the official designated by the agency to respond to requests for information about the meeting.

§ 2505.7 What are the procedures for changing the time or place of a meeting following the public announcement?

(a) After there has been a public announcement of a meeting, the time or place of the meeting may be changed only if the Board publicly announces the change at the earliest practicable time. Such a change need not be determined by recorded vote.

(b) After there has been a public announcement of a meeting, the subject-matter of the meeting, or the determination of the Board to open or to close a meeting may be changed only when—

(1) The Board determines, by recorded vote, that Board business so requires and that no earlier announcement of the change was possible; and

(2) The Board publicly announces the change and the vote of each Member at the earliest practicable time.

(c) The deletion of any subject-matter previously announced for a meeting is not a change requiring the approval of the Board under paragraph (b) of this section.

Dated: May 6, 1999.

Thomas L. Bryant,

Acting General Counsel.

[FR Doc. 99–11882 Filed 5–10–99; 8:45 am]

BILLING CODE 6050–28–P

DEPARTMENT OF THE INTERIOR

Fish and Wildlife Service

50 CFR Part 17

RIN 1018–AF43

Endangered and Threatened Wildlife and Plants; Proposed Rule To Delist the Douglas County Population of Columbian White-Tailed Deer

AGENCY: Fish and Wildlife Service, Interior.

ACTION: Proposed rule.

SUMMARY: We (the U.S. Fish and Wildlife Service) propose to remove the Douglas County population of the Columbian white-tailed deer (*Odocoileus virginianus leucurus*) from the Lists of Endangered and Threatened Wildlife and Plant species (delist), pursuant to the Endangered Species Act of 1973, as amended.

Two populations of this subspecies exist, one in Douglas County, Oregon, (Douglas County population), and the other in Columbia and Clatsop counties, Oregon, and Wahkiakum County, Washington (Columbia River population). The Columbian white-tailed deer was listed as endangered in 1967 under the Endangered Species Preservation Act, and subsequently listed under the Endangered Species Act of 1973 as amended (Act).

The Douglas County population has increased from a low of fewer than 300 deer in 1940 to a current total of about 5,500 deer. The range of this population also has increased. Habitat has been secured and/or protected for the population, enabling it to increase in numbers and range to the point where a change in status is appropriate.

The Douglas County population of Columbian white-tailed deer meets the recovery plan's criteria for delisting. The Columbia River population numbers meet the criteria for downlisting to threatened, but do not presently meet the objectives for secure habitat needed to delist the population. We anticipate another proposed rule in the future to downlist this population.

This proposed rule includes a proposed 5-year post-delisting monitoring plan for the Douglas County population as required for species that are delisted due to recovery. Monitoring will include population trends and productivity.

DATES: We must receive your comments on the Douglas County population of Columbian white-tailed deer delisting by July 12, 1999. Public hearing requests must be received by June 25, 1999.

ADDRESSES: Send comments and materials concerning this proposal to the Supervisor, U.S. Fish and Wildlife Service, Southwest Oregon Field Office, 2900 N.W. Stewart Parkway, Roseburg, Oregon 97470. Comments and materials received will be available for public inspection, by appointment, during normal business hours at the above address.

FOR FURTHER INFORMATION CONTACT: Craig Tuss, Field Supervisor, U.S. Fish and Wildlife Service (See ADDRESSES section), (telephone 541/957–3474; facsimile 541/957–3475) for information pertaining to the Douglas County population.

SUPPLEMENTARY INFORMATION:

Background

The Columbian white-tailed deer (*Odocoileus virginianus leucurus*) resembles other white-tailed deer subspecies, ranging in size from 39 to 45 kilograms (kg) (85 to 100 pounds (lbs)) for females and 52 to 68 kg (115 to 150 lbs) for males. Generally a red-brown color in summer, and gray in winter, the species has white rings around the eyes and a white ring just behind the nose. Its tail is long and triangular in shape, and is brown on the dorsal (upper) surface and fringed in white (Oregon Department of Fish and Wildlife (ODFW) 1995). The species was formerly distributed throughout the bottomlands and prairie woodlands of the lower Columbia, Willamette, and Umpqua River basins in Oregon and southern Washington (Bailey 1936). It is the westernmost representative of the 38 subspecies of white-tailed deer. Early accounts suggested this deer was locally common, particularly in riparian areas along the major rivers (Gavin 1978). The decline in deer numbers was rapid with the arrival and settlement of pioneers in the fertile river valleys. Conversion of brushy riparian land to agriculture, urbanization, uncontrolled sport and commercial hunting, and perhaps other factors apparently caused the extirpation of this deer over most of its range by the early 1900's (Gavin 1978). Only a small herd of 200 to 400 animals in the lower Columbia River area of Clatsop and Columbia counties, Oregon, and Cowlitz and Wahkiakum counties, Washington, and a disjunct population of unknown size in Douglas County, Oregon, survived. These two remnant populations are geographically separated by about 320 kilometers (km) (200 miles (mi)) of unsuitable or discontinuous habitat.

Population declines led to classification of this subspecies as endangered in 1967 (32 FR 4001). Prior to 1977, the Douglas County population was considered a black-tailed deer (*Odocoileus hemionus columbiana*) or a hybrid between the black-tailed deer and the Columbian white-tailed deer by the State of Oregon, and was managed accordingly, including by a regulated harvest. In 1978, the State of Oregon recognized the white-tailed deer population in Douglas County as the Columbian white-tailed deer and prohibited hunting of white-tailed deer in that County (ODFW 1995). The Columbian white-tailed deer was removed from the State of Oregon list of threatened and endangered species in 1996 because the State considers the population to have recovered.

The Columbian White-Tailed Deer Recovery Plan (Recovery Plan) was approved by us in 1976, and a revised version was approved in 1983. Because of the distance between these populations and differences in habitats and threats, the Recovery Plan addresses the recovery of each population separately.

Crews (1939) estimated the population in the 1930's in Douglas County at 200 to 300 individuals within a range of about 78 square kilometers (sq km) (30 square miles (sq mi)). In 1970, ODFW estimated that 450 to 500 deer were present. By 1983, the number had increased to about 2,500 (Smith 1985). The population has continued to grow and presently numbers about 5,500 deer (ODFW 1995).

Along with this increase in numbers, the range also has expanded. The deer have expanded to the north and west in the last 10 years, and now occupy an area of approximately 800 sq km (308 sq mi)(ODFW 1995). The highest densities of Columbian white-tailed deer are found along the south bank of the North Umpqua River within about 1 km (0.6 mi) of the river. Within this zone, browse lines are becoming evident in some areas, and higher parasite loads and bacterial infections are beginning to become apparent due to high concentrations of deer (Kistner and Denney 1991). High internal parasite loads are generally considered to be indicators of high deer densities (ODFW 1995).

Most habitat for the Douglas County population is on private lands, and 3,713 hectares (ha) (9,191 acres (ac)) of suitable habitat are presently considered secure on Federal, County and private lands. For the purpose of delisting, habitat is considered secure if it is protected by legally binding measures or law from adverse human activities for the foreseeable future. The majority of this secure habitat (2,804 ha) (6,941 ac) is managed by the U.S. Department of the Interior, Bureau of Land Management (BLM), Roseburg District. About 2,658 ha (6,581 ac) is managed as the North Bank Habitat Management Area, which was acquired by the BLM in order to secure habitat for the Douglas County population of Columbian white-tailed deer, and its primary purpose is to manage for the species (BLM 1998). BLM also manages another 145 ha (360 ac) of for the species (Lowell Hayes, BLM, *in litt.* 1998). Douglas County provides another 626 ha (1,550 ac) of secure habitat, and includes the Kanipe Ranch property (444 ha) (1,100 ac), which was deeded to the County with the stipulation that it be managed as a wildlife area and the County manages it in that manner; Whistler Park (40 ha)(100 ac), which the County manages as a park; and the Glide Transfer Site (141 ha)(350 ac) which is managed as an experimental forest, with wildlife habitat as one of its objectives (Frank M. Nielsen, Douglas County Public Works Department, *in litt.* 1998; David Peterson, U.S. Fish and Wildlife Service, pers. comm. 1998). Several other organizations are providing secure habitat, including the Nature Conservancy, which owns about 8 ha (20 ac) and manages it as a natural area and will continue to do so into perpetuity; 12 ha (30 ac) is provided by Oregon Department of Fish and Wildlife, which manages the land for wildlife and public fishing; and Ramp Canyon (263 ha) (650 ac) is managed by the Ramp Canyon Board, comprised of private citizens, as an outdoor recreation site which provides habitat for the Douglas County population of Columbian white-tailed deer (D. Peterson, pers. comm. 1998).

Though not considered secure, habitat on private lands within the core range of this population that contains key foraging, hiding, fawning, and travel corridors is also providing a measure of protection for the subspecies. Douglas County has implemented land use plans and zoning ordinances that apply to private land to protect habitat and assist in recovery (Douglas County 1997). These protection measures include retention of existing land uses that maintain essential habitat components. Minimum lot sizes for farm use and timberlands, and building setbacks along riparian zones, have been established to assure maintenance of habitat and travel corridors (ODFW 1995; Douglas County 1997).

The Recovery Plan described the criteria for reclassification of the Douglas County population to threatened status. This criteria was maintenance of a total of 1,000 animals in the herd in combination with

moderate habitat protection (such as provided by Douglas County Land Use Plans and zoning ordinances) (Service 1983). The Recovery Plan also had an objective of at least 500 deer distributed on at least 2,222 ha (5,500 ac) of suitable, secure habitat for the Douglas County population to be considered recovered and subject to removal from the Lists of Endangered and Threatened Wildlife (Service 1983). The figure of 500 deer was calculated based on existing sex ratios and distribution, and is theoretically required to eliminate the potentially deleterious effects of inbreeding. The theory and formulas for calculating this number were developed and discussed by Senner (1980).

From 1994 to 1997, population estimates indicated that 507, 424, 558 and 618 deer have been present on secure habitat (S. Denney, ODFW, *in litt.* 1997). The rest of the population is found on habitat not considered secure. The current total population size is roughly five times the population size required for downlisting, which greatly reduces the risk to the population. It is also anticipated that as habitat management and restoration activities are implemented by the BLM in the North Bank Habitat Area, which contains the majority of secure lands, the carrying capacity and numbers of deer on these lands will increase accordingly. The Douglas County population has met the objectives in the Recovery Plan, and greatly exceeded the habitat objectives.

Distinct Vertebrate Population Segment

The Douglas County and Columbia River populations of the Columbian white-tailed deer qualify as distinct under our Policy Regarding the Recognition of Distinct Vertebrate Population Segments Under the Endangered Species Act (Act) of 1973, as amended (16 U.S.C. 1531 *et seq.*), published in the **Federal Register** on February 7, 1996 (61 FR 4722). For a population to be listed under the Act as a distinct vertebrate population segment, three elements are considered—(1) the discreteness of the population segment in relation to the remainder of the species to which it belongs; (2) the significance of the population segment to the species to which it belongs; and (3) the population segment's conservation status in relation to the Act's standards for listing (i.e., is the population segment, when treated as if it were a species, endangered or threatened?).

The Douglas County and Columbia River populations of Columbian white-tailed deer are discrete as they are geographically isolated and separated from each other. Historically, this subspecies ranged from the south end of Puget Sound in Washington south to the Roseburg area in Oregon (Bailey 1936). At the present time, only two locations for this subspecies exist. The subspecies' range has been reduced to its present locations along the Columbia River in Washington and Oregon and in Douglas County, Oregon. The populations are separated by over 320 km (200 mi) of discontinuous or unsuitable habitat. Columbian white-tailed deer are not migratory and appear to restrict their movements to relatively small home ranges (ODFW 1995). As a result, the wide geographic gap in suitable habitat between the Columbia River and Douglas County populations identifies this subspecies as having two discrete and isolated population segments.

Regarding significance, there are some recognized ecological differences between the habitats of the Columbia River and Douglas County populations, although both subpopulations are tied to riparian areas. The Douglas County population occurs in a relatively dry area that has rolling hills, grasslands, and oak forests (ODFW 1995). Smith (1981) found that oak woodland/grassland habitat is important to this population, and heavily used by Columbian white-tailed deer. The Columbia River population, by contrast, occurs in wet bottomlands and dense forest swamps where there is little elevational relief, and which receive a large amount of precipitation (ODFW 1995).

As previously mentioned, the Columbian white-tailed deer was listed as endangered in 1967 (32 FR 4001), and subsequently listed under the Act (see Previous Federal Action section below). The Recovery Plan addressed recovery objectives and criteria for each population, and recognized them as two distinct populations because of differences in location, habitats, land use, etc. (Service 1983). For the reasons described herein, we believe that the Douglas County population has met the criteria for delisting. The Columbia River population has met the criteria for downlisting, and we anticipate another proposed rule in the future to downlist this population.

Previous Federal Action

On March 11, 1967, the Columbian white-tailed deer was listed in the **Federal Register** as an endangered species under the Endangered Species Preservation Act (ESPA) of 1966 (32 FR 4001). The ESPA defined listing factors and required publication of the names of fish and wildlife species threatened with extinction. On March 8, 1969, we again published in the **Federal Register** (34 FR 5034) a list of fish and wildlife species threatened with extinction under the Endangered Species Conservation Act of 1969. This list again included the Columbian white-tailed deer. On August 25, 1970, we published a proposed list of endangered species, which included the Columbian white-tailed deer, in the **Federal Register** (35 FR 13519) as part of new regulations implementing the Endangered Species Conservation Act of 1969. This rule became final on October 13, 1970 (35 FR 16047). Species listed as endangered on the above mentioned lists were automatically included in the lists of threatened and endangered species when the Endangered Species Act was authorized in 1973.

The processing of this proposed rule conforms with our listing priority guidance published in the **Federal Register** on May 8, 1998 (63 FR 25502). This guidance clarifies the order in which we will process rulemakings following two related events—(1) the lifting, on April 26, 1996, of the moratorium on final listings imposed on April 10, 1995 (Public Law 104–6) and, (2) the restoration of significant funding for listing through passage of the Omnibus Budget Reconciliation Act following severe funding constraints imposed by a number of continuing resolutions between November 1995 and April 1996. Under this guidance, highest priority (Tier 1) is given to processing emergency listings and second highest priority (Tier 2) to resolving the listing status of outstanding proposed listings, resolving the conservation status of candidate species, processing administrative findings on petitions to add species to the lists or reclassify species from threatened to endangered status, and delisting or reclassifying actions. The lowest priority actions, processing critical habitat designations, are in Tier 3. This proposed rule falls under Tier 2.

Summary of Factors Affecting the Species

Section 4 of the Endangered Species Act of 1973, as amended (Act)(16 U.S.C. 1531 *et seq.*) and regulations promulgated to implement the listing provisions of the Act (50 CFR part 424) set forth the procedures for listing, reclassifying or removing species. A species may be determined to be an endangered or threatened species due to one or more of the five factors described in section 4(a)(1). These factors should also be considered in any decision to delist a species, and their application to

the Columbian white-tailed deer are as follows:

A. *The present or threatened destruction, modification, or curtailment of its habitat or range.* The preferred habitat of the Columbian white-tailed deer includes grass-shrub, spruce-cottonwood swamps, oak mottes, open and closed oak woodland within bottomland and riparian zones, and some coniferous forest. The lowland riparian system, however, is the key habitat component for the deer (Service 1983; Smith 1987). Conversion of these habitat types to residential and intensive agricultural developments was a key factor leading to the listing of this subspecies as endangered.

Within the range of the Douglas County population, 3,713 ha (9,191 ac) are now considered secure habitat, as previously described. These lands were estimated to harbor 507, 424, 558 and 618 deer in each of the years between 1994–1997, respectively (S. Denney, *in litt.* 1997). The remainder of the species' preferred habitats are privately owned. However, since 1983, prime habitat areas for Columbian white-tailed deer have been designated by the Douglas County Land Use Plan (1997) for rural residential, agriculture, grazing and forest, which protects lands from urban development. Key travel corridors and fawning areas along the North Umpqua River are now partly protected from intensive and excessive development by Douglas County, which developed a habitat protection program for the Columbian white-tailed deer within the species' range in that county. Protective measures to conserve habitat for the species include a 30 m (100 ft) structural development setback from streams to preserve riparian corridors, a minimum parcel size of 32 ha (80 ac) within 96 percent of the protected habitat area, and limit rural residential development along the western edge of the protected habitat. The deer population has continued to increase in this area. This sustained increase in numbers in conjunction with habitat protection measures has resulted in a population of Columbian white-tailed deer that is no longer threatened by habitat loss or destruction.

B. *Overutilization for commercial, recreational, scientific, or educational purposes.* Prior to protection under the Act, the Columbian white-tailed deer experienced intensive hunting pressure that, coupled with habitat loss, resulted in a precipitous population decline. Since protection under the Act and the securing of suitable habitat, the Douglas County population has increased in numbers, and has increased even during the periods of legal sport hunting. Scientific studies, permitted under section 10(a)(1)(A) of the Act, have resulted in the take of as many as 40 deer within 1 year from the Douglas County population. These permitted takings have not had measurable impacts on population trends in this population.

Poaching of several Columbian white-tailed deer has been documented annually, but it is not judged to have a significant impact on the population (ODFW 1995).

Past overutilization was considered a threat to this population and was one of several factors leading to its listing as endangered. Columbian white-tailed deer cannot be legally hunted while the subspecies is listed under the Act. Delisting of the Douglas County population will allow the State of Oregon to regulate the harvest of this subspecies, and may result in an increased level of utilization (ODFW 1995). However, the population now numbers about 5,500 deer, which is considered to be large enough to withstand some regulated harvest. The regulated harvest objective would be to reduce the population density in certain areas, and to expand the range of the subspecies by trapping and transplanting individuals to unoccupied range (ODFW 1995). Also, the population would be monitored for at least 5 years after delisting to ensure that the population remains stable and there are no further risks to the subspecies' well-being. Overutilization is no longer considered a threat to the population.

C. *Disease or predation.* At the time of listing, disease and predation were not thought to be major limiting factors of this population. Parasitism and some bacterial diseases are now beginning to become apparent in areas where deer densities are highest. Continued increases in numbers within the core range may lead to widespread mortality from parasitism and disease (Kistner and Denney 1991). Kistner and Denney's (1991) work included the permitted take of 40 deer to analyze disease and parasite levels. Delisting would allow management practices by the State of Oregon such as hazing to disperse concentrations of deer and depredation permits to remove individual deer. Sport hunting to regulate high-density populations would also be possible. These actions would reduce the likelihood of a density-dependent epizootic disease or infection. It would not, however, totally eliminate the potential for such an occurrence. Predation has not been identified or recognized as a controlling or limiting factor of this population. In conclusion, disease and predation are not considered threats to the population, and delisting of the population would probably facilitate managers' ability to reduce existing problems with disease.

D. *The inadequacy of existing regulatory mechanisms.* The lack of adequate regulatory mechanisms for protecting habitat and controlling take was responsible for the decline of the deer. Listing the deer as endangered under the Act protected individual animals from take, but habitat degradation and destruction on private lands has continued, which was a major factor contributing to the decline. For the Douglas County population, securing 2,222 ha (5,500 ac) of habitat that supports 500 deer assures that adequate habitat will be protected to maintain a minimum viable population (Service 1983). The 3,713 ha (9,191 ac) of habitat secured on BLM, Douglas County, and other lands exceeds this minimum amount. BLM manages the North Bank Management Area and several hundred other hectares (acres) for Columbian white-tailed deer; Douglas County manages 624 ha (1550 ac) as parks, forests, and wildlife areas that provide habitat; and The Nature Conservancy, ODFW, and Ramp Canyon board also manage lands to benefit the species. In addition, passage and implementation of the Douglas County Land Use Plan in 1995 provided additional habitat protection for the population on private land, although this level of habitat protection does not meet the secure habitat criteria. That plan requires retention of wooded habitat on farm and forest land, and 30 meter (100 feet) setbacks for building construction along the North Umpqua River. This portion of the river is the principal travel corridor and dispersal route within the core area of this population. Securing of adequate habitat on Federal and County lands, and the additional zoning requirements have removed this threat to the Douglas County population.

E. *Other natural or manmade factors affecting its continued existence.* With growth of the deer population, deer-human conflicts have increased. Private croplands, gardens, and ornamental plantings have been subject to varying degrees of depredation by the Douglas County population. This has created serious problems because under the Act it is illegal to haze, harass, disperse, or lethally take listed deer, even where serious continued damage is occurring. Unregulated indiscriminate illegal take is occurring and is likely to increase as the herd increases. Illegal unreported forms of control do not allow for

analysis of behavior, population changes or the subsequent formulation of management strategies based on known population dynamics. Removal of the Douglas County population of Columbian white-tailed deer from the endangered and threatened species lists will allow development and implementation of management procedures necessary to control and enhance deer populations, while fostering better land manager-landowner relationships that are necessary for effective long-term conservation.

Fire has historically played a large part in shaping habitat for Columbian white-tailed deer in Douglas County. Although fire may have negative short-term impacts on habitat, deer distribution, and numbers, the long-term effects can be beneficial by removing decadent brush, promoting nutritious vegetation, and maintaining the oak/grassland that the subspecies prefers (ODFW 1995). Columbian white-tailed deer evolved with the occurrence of fire in the ecosystem, and prescribed burning of their habitat would likely be beneficial. Currently, where this population occurs, all wildfires are suppressed because of the proximity of homes and businesses. Given the increasing Douglas County population and resulting range expansion, it is unlikely that fire would pose a significant threat to the population.

We have carefully assessed the best scientific and commercial information available regarding the past, present, and future threats faced by this subspecies in determining to propose this rule. Based on this evaluation, the proposed action is to delist the Douglas County population of the Columbian white-tailed deer. The population currently exceeds the minimum population number necessary to assure continued viability. Sufficient suitable habitat has been secured in Douglas County to support delisting that population.

Effects of the Rule

If the Douglas County population of the Columbian white-tailed deer is removed from the Lists of Threatened and Endangered Species, Federal agencies would no longer be required to consult with us under section 7 of the Act to ensure that any action authorized, funded, or carried out by them is not likely to jeopardize the continued existence of the deer. The protection from take under section 9 of the Act would also be eliminated. However, the 1988 amendments to the Act require that all species which have been delisted due to recovery be monitored for at least five years following delisting. We are responsible for implementing a system, in cooperation with the states, to monitor the status of a recovered species.

Delisting the Douglas County population could have several positive effects. Individual deer could be legally controlled by hazing or physical removal, or populations could be controlled where repeated severe damage to agricultural crops, gardens, or ornamental plantings was documented. If delisted, the population could also be regulated through legal harvest. Biological data such as sex ratios, age, reproductive status, and health status (parasitism and bacterial infections) from individual deer taken through legal harvest or the issuance of special permits would be available.

Monitoring

Section 4(g)(1) of the Act requires that whenever a species has recovered and been delisted, we must implement a system, in cooperation with the states, to effectively monitor the status of any species that has recovered to the point where the protective measures provided under the Act are no longer necessary. The purpose of this requirement is to develop a program that detects the failure of any delisted species to sustain itself without the protective measures of the Act. This monitoring program will continue for at least five years and, if at any time during that period data indicates that the species' well-being is under a significant risk, we can initiate listing procedures, including, if appropriate, emergency listing.

The Recovery Team will coordinate monitoring activities and annually review the status of the Douglas County population of Columbian white-tailed deer. Within 6 months following the conclusion of the mandated 5-year monitoring program, the Recovery Team will conduct a comprehensive review of the Douglas County population of Columbian white-tailed deer and forward a report to the Regional Director for approval and release to the general public for review and comment. The review will include a recommendation on whether to (1) continue the monitoring program for an additional five years, (2) terminate the monitoring program, or (3) reconsider the status of the Columbian white-tailed deer.

We will use, to the fullest extent possible, information routinely collected by researchers and land managers in a variety of organizations and agencies, which will supplement data collected under a systematic monitoring program, and consider relisting the species if, during or after the 5-year monitoring effort, we have determined a reversal of recovery has taken place.

If the report recommends, and we have determined, at the end of the mandatory 5-year monitoring period that recovery is complete, and factors that led to the listing of the Douglas County population, or any new factors, have been sufficiently reduced or eliminated, monitoring may be reduced or terminated. If the data show that the Douglas County population is declining, or if one or more factors that have the potential to cause decline are identified, monitoring will continue beyond the 5-year period and the monitoring program may be modified, based on an evaluation of the results of the initial 5-year monitoring program.

The following minimum monitoring activities are necessary:

(1) Monitor Columbian white-tailed deer population parameters using the following measures—

(a) Fall (November 15–December 31) and spring (March 1–April 15) ground surveys of each population/subpopulation. Data collected on these surveys will include—

(i) Sex and age ratios to estimate fawn production, overwinter fawn survival, and genetic effective population size, i.e., the risk of inbreeding.

(ii) Numbers of Columbian white-tailed deer counted to estimate population trends and minimum population size.

(b) Aerial surveys—Aerial surveys using forward looking infra-red scanners (or similar technology) are needed to obtain more precise information on minimum deer numbers. Survey flights will be conducted three times per year for three years over areas of secure habitat, and then once every third year for the duration of the monitoring program should a second five years of monitoring be required. Data from these flights will be used to develop a correlation factor with the ground surveys described in (a) above. The correlation factor will be used to improve estimates of population sizes and trends obtained from ground surveys.

(2) Develop Geographic Information System maps of Columbian white-tailed deer range to use in monitoring habitat loss to human development, habitat improvements, and the locations actually occupied by the deer. This information will be used to encourage local land use planning that protects the habitat of the Columbian white-tailed deer.

Public Comments Solicited

We intend that any final action resulting from this proposal to remove

the Douglas County population from the List of Endangered and Threatened Wildlife will be as accurate and effective as possible. Therefore, we solicit any comments or suggestions from the public, other concerned governmental agencies, the scientific community, industry, or any other interested party concerning any aspect of this proposal. Comments should be sent to our Southwest Oregon Office (see **ADDRESSES** section). Comments are particularly sought concerning:

(1) Biological, commercial trade, or other relevant data concerning any threat (or lack thereof) to the Columbian white-tailed deer and its habitat that would result from implementing the measures outlined in this proposed rule;

(2) Additional information concerning the range, distribution, and population size of this subspecies;

(3) Current or planned activities in the subject area and their possible impacts on Columbian white-tailed deer and its habitat; and

(4) Adequacy of the monitoring plan, and its ability to detect changes in the population.

Our final decision regarding the delisting of the Douglas County population of Columbian white-tailed deer will take into consideration the comments and any additional information that we receive during the comment period. Such communications may lead to adoption of a final regulation that differs from this proposal.

The Endangered Species Act provides for one or more public hearings on this proposal, if requested. Requests must be received within 45 days of the date of publication of the proposal in the **Federal Register**. You must make such requests in writing and address them to—Supervisor, U.S. Fish and Wildlife Service, Western Washington Office, 510 Desmond Drive, Suite 102, Lacey, Washington 98503.

Executive Order 12866

Executive Order 12866 requires agencies to write regulations that are easy to understand. We invite your comments on how to make this proposal easier to understand including answers to questions such as the following: (1) Is the discussion in the ''Supplementary Information'' section of the preamble helpful in understanding the proposal? (2) Does the proposal contain technical language or jargon that interferes with its clarity? (3) Does the format of the proposal (grouping and order of sections, use of headings, paragraphing, etc.) aid or reduce its clarity? What else could we do to make the proposal easier to understand?

Required Determinations

Paperwork Reduction Act

Office of Management and Budget (OMB) regulations at 5 CFR 1320, which implement provisions of the Paperwork Reduction Act (44 U.S.C. 3501 *et seq.*), require that interested members of the public and affected agencies have an opportunity to comment on agency information collection and record keeping activities (see 5 CFR 1320.8(d)). The OMB regulations at 5 CFR 1320.3(c) define a collection of information as the obtaining of information by or for an agency by means of identical questions posed to, or identical reporting, record keeping, or disclosure requirements imposed on ten or more persons. Furthermore, 5 CFR 1320.3(c)(4) specifies that ''ten or more persons'' refers to the persons to whom a collection of information is addressed by the agency within any 12-month period.

This rule does not include any collections of information that require approval by OMB under the Paperwork Reduction Act. The information needed to monitor the status of the Columbian white-tailed deer will be collected primarily by Service, ODFW, and the BLM. We do not anticipate a need to request data or other information from the public, other than the ODFW, to satisfy monitoring information needs. If it becomes necessary to collect information from ten or more individuals, groups, or organizations per year, we will first obtain information collection approval from OMB.

National Environmental Policy Act

We have determined that an Environmental Assessment or an Environmental Impact Statement, as defined under the authority of the National Environmental Policy Act of 1969, need not be prepared in connection with regulations adopted pursuant to section 4(a) of the Endangered Species Act of 1973, as amended. A notice outlining our reasons for this determination was published in the **Federal Register** on October 25, 1983 (48 FR 49244).

References Cited

A complete list of all references cited herein, as well as others, is available upon request from the Supervisor, U.S. Fish and Wildlife Service, Western Washington Office, 510 Desmond Dr., Suite 102, Lacey, Washington 98503.

Author

The primary author of this proposed rule is John Grettenberger, Wildlife Biologist, U.S. Fish and Wildlife Service, Western Washington Office, 510 Desmond Drive SE, Suite 102, Lacey, Washington 98503, (360) 753–9440.

List of Subjects in 50 CFR Part 17

Endangered and Threatened Species, Exports, Imports, Reporting and record keeping requirements, Transportation.

Proposed Regulation Promulgation

For the reasons set out in the preamble, we hereby propose to amend part 17, subchapter B of chapter I, Title 50 of the Code of Federal Regulations as set forth below:

PART 17—[AMENDED]

1. The authority citation for part 17 continues to read as follows:

Authority: 16 U.S.C. 1361–1407; 16 U.S.C. 1531–1544; 16 U.S.C. 4201–4245; Pub. L. 99–625, 100 Stat. 3500, unless otherwise noted.

2. We propose to amend section 17.11(h) by revising the entry for the Columbian white-tailed deer, *Odocoileus virginianus leucurus*, under ''MAMMALS'', to read as follows:

Species		Historic range	Vertebrate population where endangered or threatened	Status	When listed	Critical habitat	Special rules
Common name	Scientific name						
MAMMALS							
*	*	*	*	*	*	*	*
Deer, Columbian White-tailed.	*Odocoileus virginianus leucurus.*	U.S.A. (WA, OR)	Entire, except Douglas County, OR.	E	1,____	NA	NA
*	*	*	*	*	*	*	*

Dated: April 16, 1999.

Jamie Rappaport Clark,

Director, U.S. Fish and Wildlife Service.

[FR Doc. 99–11747 Filed 5–10–99; 8:45 am]

BILLING CODE 4310–55–P

Notices

Federal Register
Vol. 64, No. 90
Tuesday, May 11, 1999

This section of the FEDERAL REGISTER contains documents other than rules or proposed rules that are applicable to the public. Notices of hearings and investigations, committee meetings, agency decisions and rulings, delegations of authority, filing of petitions and applications and agency statements of organization and functions are examples of documents appearing in this section.

DEPARTMENT OF AGRICULTURE

Agricultural Research Service

Notice of Federal Invention Available for Licensing and Intent To Grant Exclusive License

AGENCY: Agricultural Research Service, USDA.

ACTION: Notice of availability and intent.

SUMMARY: Notice is hereby given that a Federally owned invention U.S. Serial No. 09/216,513, filed December 18,1998, entitled ''An Insect Barrier System for Prevention of the Passage of Crawling Insects'' is available for licensing and the U.S. Department of Agriculture, Agricultural Research Service, intends to grant to Aqua-Tainer Company of Shorewood, Illinois, an exclusive license to Serial No. 09/216,513.

DATES: Comments must be received on or before August 9, 1999.

ADDRESSES: Send comments to: USDA, ARS, Office of Technology Transfer, 5601 Sunnyside Avenue, Room 4–1158, Beltsville, Maryland 20705–5131.

FOR FURTHER INFORMATION CONTACT: June Blalock of the Office of Technology Transfer at the Beltsville address given above; telephone: 301–504–5989.

SUPPLEMENTARY INFORMATION: The Federal Government's patent rights to this invention are assigned to the United States of America, as represented by the Secretary of Agriculture. It is in the public interest to so license this invention as the Aqua-Tainer Company has submitted a complete and sufficient application for a license. The prospective exclusive license will be royalty-bearing and will comply with the terms and conditions of 35 U.S.C. 209 and 37 CFR 404.7. The prospective exclusive license may be granted unless, within ninety (90) days from the date of this published Notice, the Agricultural Research Service receives written evidence and argument which establishes that the grant of the license would not be consistent with the requirements of 35 U.S.C. 209 and 37 CFR 404.7.

Richard M. Parry, Jr.,
Assistant Administrator.

[FR Doc. 99–11868 Filed 5–10–99; 8:45 am]

BILLING CODE 3410–03–P

DEPARTMENT OF AGRICULTURE

Agricultural Research Service

Notice of Federal Invention Available for Licensing and Intent To Grant Exclusive License

AGENCY: Agricultural Research Service, USDA.

ACTION: Notice of availability and intent.

SUMMARY: Notice is hereby given that a Federally owned invention U.S. Serial No. 08/944,245, filed October 6, 1997, entitled ''Methods and Compositions for Producing Desiccation Tolerant *Paecilomyces fumosoroseus* Spores'' is available for licensing and the U.S. Department of Agriculture, Agricultural Research Service, intends to grant to Eco Soil Systems, Inc., of San Diego, California, an exclusive license to Serial No. 08/944,245.

DATES: Comments must be received on or before August 9, 1999.

ADDRESSES: Send comments to: USDA, ARS, MWA, Office of Director, National Center for Agricultural Utilization Research, Room 2042, 1815 N. University Street, Peoria, Illinois 61604.

FOR FURTHER INFORMATION CONTACT: Andrew Watkins of the National Center for Agricultural Utilization Research at the Peoria address given above; telephone: 309–681–6545.

SUPPLEMENTARY INFORMATION: The Federal Government's patent rights to this invention are assigned to the United States of America, as represented by the Secretary of Agriculture. It is in the public interest to so license this invention as Eco Soil Systems, Inc., has submitted a complete and sufficient application for a license. The prospective exclusive license will be royalty-bearing and will comply with the terms and conditions of 35 U.S.C. 209 and 37 CFR 404.7. The prospective exclusive license may be granted unless, within ninety (90) days from the date of this published Notice, the Agricultural Research Service receives written evidence and argument which establishes that the grant of the license would not be consistent with the requirements of 35 U.S.C. 209 and 37 CFR 404.7.

Richard M. Parry, Jr.,
Assistant Administrator.

[FR Doc. 99–11867 Filed 5–10–99; 8:45 am]

BILLING CODE 3410–03–M

DEPARTMENT OF AGRICULTURE

Food and Nutrition Service

RIN 0584–AC70

Food Stamp Program: Maximum Allotments for Alaska, Hawaii, Guam, and the Virgin Islands

AGENCY: Food and Nutrition Service, USDA.

ACTION: General notice.

SUMMARY: By this notice, the Department of Agriculture is updating for Fiscal Year 1999 the maximum food stamp allotments for participating households in Alaska, Hawaii, Guam, and the Virgin Islands. These annual adjustments, required by law, take into account changes in the cost of food and statutory adjustments since the amounts were last calculated.

EFFECTIVE DATE: This notice is effective May 11, 1999.

FOR FURTHER INFORMATION CONTACT: Margaret Werts Batko, Assistant Branch Chief, Certification Policy Branch, Program Development Division, Food and Nutrition Service, U.S. Department of Agriculture, 3101 Park Center Drive, Alexandria, VA 22302, or telephone at (703) 305–2516. The e-mail address is Margaret.Batko@FNS.USDA.GOV.

SUPPLEMENTARY INFORMATION:

Implementation

As required by section 3(o) of the Food Stamp Act of 1977 (the Act), 7 U.S.C. 2012(o), State agencies should have implemented this action on October 1, 1998, based on advance notice of the new amounts. As required by regulations published at 47 FR 46485 (October 19, 1982), annual statutory adjustments to the maximum allotment levels and income eligibility standards are issued by General Notices published in the **Federal Register** and not through rulemaking proceedings.

Executive Order 12866

This notice has been determined to be not significant for purposes of Executive Order 12866 and therefore has not been reviewed by the Office of Management and Budget (OMB).

Executive Order 12372

The Food Stamp Program is listed in the Catalog of Federal Domestic Assistance under No. 10.551. For the reasons set forth in the Final rule and related notice to 7 CFR part 3015, Subpart V (48 FR 29916, June 24, 1983), this program is excluded from the scope of Executive Order No. 12372 which requires intergovernmental consultation with State and local officials.

Regulatory Flexibility Act

The Under Secretary for Food, Nutrition, and Consumer Services has certified that this action will not have a significant economic impact and will not have an impact on a substantial number of small entities. The action will increase the amount of money spent on food through increases in food stamp benefits. However, this money will be distributed among all eligible food stamp vendors, so the effect on any one vendor will not be significant.

Paperwork Reduction Act

This action does not contain reporting or record keeping requirements subject to review by OMB pursuant to the provisions of the Paperwork Reduction Act of 1995, 44 U.S.C. 3507.

Unfunded Mandate Reform Act of 1995 (UMRA)

Title II of UMRA establishes requirements for Federal agencies to assess the effects of their regulatory actions on State, local, and tribal governments and the private sector. Under section 202 of the UMRA, FNS generally must prepare a written statement, including a cost-benefit analysis, for proposed and final rules with ''Federal mandates'' that may result in expenditures to State, local, or tribal governments, in the aggregate, or to the private sector, of $100 million or more in any one year. When such a statement is needed for a rule, section 205 of the UMRA generally requires FNS to identify and consider a reasonable number of regulatory alternatives and adopt the least costly, more cost-effective or least burdensome alternative that achieves the objectives of the rule.

This notice contains no Federal mandates (under the regulatory provisions of Title II of the UMRA) for State, local, and tribal governments or the private sector of $100 million or more in any one year. Thus today's rule is not subject to the requirements of sections 202 and 205 of the UMRA.

Background

Thrifty Food Plan (TFP) and Allotments

As provided for in section 3(o) of the Act, 7 USC 2012(o), the TFP is a plan for the consumption of foods of different types (food groups) that families might use to provide nutritious meals and snacks for family members. The plan provides for a diet required to feed a family of four persons consisting of a man and woman aged 20 to 50, a child 6 to 8 and a child 9 to 11. The cost of the TFP is adjusted monthly to reflect changes in the costs of the food groups.

The TFPs for Alaska and Hawaii are based on an adjusted average for the six-month period that ends with June 1998. Since the Bureau of Labor Statistics (the source of food price data) no longer publishes monthly information to compute Alaska and Hawaii TFPs, the adjusted average provides a proxy for actual June 1998 TFP costs. The adjusted average is equal to January-June 1998 TFP costs for Alaska and Hawaii increased by the average percentage difference between the cost of the TFP in Alaska and Hawaii in June and the January-June average in 1986 (a 1.53 percent increase over January-June costs in Alaska and 1.82 percent increase in Hawaii).

For the period January through June 1998, the average cost of the TFP was $511.70 in Alaska, and $646.60 in Hawaii. The proxy in Alaska for actual June 1998 TFP costs was $519.53. This proxy is multiplied by three separate adjustment factors to create three TFPs for Urban Alaska, Rural I Alaska, and Rural II Alaska. The proxy in Hawaii for actual June 1998 TFP costs was $658.37. The June 1998 cost of the TFP was $617.40 in Guam and $538.60 in the Virgin Islands.

The maximum food stamp allotment is paid to households that have no net income. For households with some type of income, their allotments are determined by reducing the maximum allotment for their household size by 30 percent of the household's net income in accordance with section 8 (a) of the Act, 7 U.S.C. 2017 (a). To obtain the maximum food stamp allotment for each household size, the TFP costs are divided by four, multiplied by the appropriate household size and economy of scale factor, and the final result rounded down to the nearest dollar.

Pursuant to section 3 (o) (3) of the Act, maximum food stamp benefits for Guam and the Virgin Islands cannot exceed those in the 50 States and the District of Columbia, so they are based upon either the lower of their respective TFPs or the TFP for rural II Alaska.

MAXIMUM ALLOTMENT AMOUNTS [1]—October 1998 as Adjusted

Household size	Urban Alaska	Rural I Alaska	Rural II Alaska	Hawaii	Guam [2]	Virgin Islands [2]
1	$157	$200	$243	$197	$185	$161
2	287	367	446	362	339	296
3	412	525	639	518	486	424
4	523	667	812	658	617	538
5	621	792	965	781	733	639
6	746	951	1158	938	879	767
7	824	1051	1279	1036	972	848
8	942	1201	1462	1185	1111	969
Each Additional Member	+118	+150	+183	+148	+139	+121

[1] Adjusted to reflect the cost of food in June, adjustments for each household size, economies of scale, and 100 percent of the TFP and rounding.

[2] Adjusted to reflect changes in the cost of food in the 48 States and DC, which correlate with price changes in these areas. Maximum allotments in these areas cannot exceed those in Rural II Alaska.

Dated: April 26, 1999.

Samuel Chambers, Jr.,

Administrator, Food and Nutrition Service.

[FR Doc. 99–11757 Filed 5–10–99; 8:45 am]

BILLING CODE 3410–30–P

DEPARTMENT OF AGRICULTURE

Food And Nutrition Service

RIN 0584–AC69

Food Stamp Program: Maximum Allotments for the 48 States and the District of Columbia, and Income Eligibility Standards for the 48 States and the District of Columbia, Alaska, Hawaii, Guam and the Virgin Islands

AGENCY: Food and Nutrition Service, USDA.

ACTION: General notice.

SUMMARY: The purpose of this notice is to update for Fiscal Year 1999 the maximum allotment levels, which are the basis for determining the amount of food stamps which participating households receive and the gross and net income limits for food stamp eligibility. These adjustments, required by law, take into account changes in the cost of living and statutory adjustments since the amounts were last calculated.

DATES: This notice is effective May 11, 1999.

FOR FURTHER INFORMATION CONTACT: Margaret Werts Batko, Assistant Chief, Certification Policy Branch, Program Development Division, Food Stamp Program, Food and Nutrition Service, USDA, 3101 Park Center Drive, Alexandria, Virginia 22302, (703) 305–2516. The e-mail address is Margaret.Batko@FNS.USDA.GOV

SUPPLEMENTARY INFORMATION:

Implementation

As required by section 3(o) of the Food Stamp Act of 1977 (the Act), 7 U.S.C. 2012(o), State agencies should have implemented the adjustments to the maximum food stamp allotments reflected in this notice on October 1, 1998, based on advance notice of the new amounts. In accordance with regulations published at 47 FR 46485–46487 (October 19, 1982), annual statutory adjustments to the maximum allotment levels and income eligibility standards are issued by general notices published in the **Federal Register** and not through rulemaking proceedings.

Classification

Executive Order 12866

This notice has been determined to be not significant for purposes of Executive Order 12866 and therefore has not been reviewed by the Office of Management and Budget (OMB).

Executive Order 12372

The Food Stamp Program is listed in the Catalog of Federal Domestic Assistance under No. 10.551. For the reasons set forth in the final rule related notice to 7 CFR part 3015, subpart V (48 FR 29116, June 24, 1983), this program is excluded from the scope of Executive Order 12372 which requires intergovernmental consultation with State and local officials.

Regulatory Flexibility Act

The Under Secretary for Food, Nutrition and Consumer Services has certified that this action will not have a significant economic impact and will not have an impact on a substantial number of small entities. The action will increase the amount of money spent on food through food stamps. However, this money will be distributed among the nation's food vendors, so the effect on any one vendor will not be significant.

Paperwork Reduction Act

This action does not contain reporting or record keeping requirements subject to approval by OMB pursuant to the provisions of the Paperwork Reduction Act of 1995, 44 U.S.C. 3507.

Unfunded Mandate Reform Act of 1995 (UMRA)

Title II of UMRA establishes requirements for Federal agencies to assess the effects of their regulatory actions on State, local, and tribal governments and the private sector. Under section 202 of the UMRA, FNS generally must prepare a written statement, including a cost-benefit analysis, for proposed and final rules with ''Federal mandates'' that may result in expenditures to State, local, or tribal governments, in the aggregate, or to the private sector, of $100 million or more in any one year. When such a statement is needed for a rule, section 205 of the UMRA generally requires FNS to identify and consider a reasonable number of regulatory alternatives and adopt the least costly, more cost-effective or least burdensome alternative that achieves the objectives of the rule.

This notice contains no Federal mandates (under the regulatory provisions of Title II of the UMRA) for State, local, and tribal governments or the private sector of more than $100 million or more in any one year. Thus this rule is not subject to the requirements of sections 202 and 205 of the UMRA.

Background

Income Eligibility Standards

The eligibility of households for the Food Stamp Program, except those in which, in accordance with section 5(a) of the Act, 7 U.S.C. 2014(a), all members are receiving ''benefits under a State program funded under part A of title IV of the Social Security Act [], supplemental security income (SSI) benefits under title XVI of the Social Security Act [], or aid to the aged, blind, or disabled under title I, X, XIV, or XV of the Social Security Act * * * .'' , is determined by comparing their incomes to the appropriate income eligibility standards (limits). Pursuant to section 5(c)(2) of the Act, households containing an elderly or disabled member are required to have qualifying net incomes, while households which do not contain an elderly or disabled member must have qualifying net incomes *and* qualifying gross incomes. Households in which all members are receiving Social Security Act title IV benefits or SSI are ''categorically eligible;'' under 7 CFR 273.2(j)(2) their incomes do not have to be below the income limits.

As provided in section 5(c)(1) of the Act, the net and gross income limits applicable to food stamp eligibility are derived from the Federal income poverty guidelines established under section 673(2) of the Community Services Block Grant Act, 42 U.S.C. 9902(2). The net income limit is 100 percent of the poverty line. The gross income limit is 130 percent of the poverty line. The guidelines are updated annually. Based on that update, the Food Stamp Program's income eligibility standards are updated each October 1. Instructions for implementation of the required adjustments for October 1, 1998, were issued by the Deputy Administrator of the Food and Nutrition Service, Food Stamp Program, in a July 30, 1998, memorandum to all State Food Stamp Program Directors. The revised income eligibility standards for the 48 States (including the District of Columbia, Guam and the Virgin Islands), Alaska and Hawaii are as follows:

FOOD STAMP PROGRAM—OCTOBER 1, 1998 TO SEPTEMBER 30, 1999

Household Size	48 States [1]	Alaska	Hawaii
Net Monthly Income Eligibility Standards (100 Percent of Poverty Level)			
1	$671	$ 840	$ 772
2	905	1,131	1,040
3	1,138	1,423	1,309
4	1,371	1,715	1,577
5	1,605	2,006	1,845
6	1,838	2,298	2,114
7	2,071	2,590	2,382
8	2,305	2,881	2,650
Each Add. Member	+234	+292	+269
Gross Monthly Income Eligibility Standards (130 Percent of Poverty Level)			
1	$873	$1,091	$1,004
2	1,176	1,471	1,352
3	1,479	1,850	1,701
4	1,783	2,229	2,050
5	2,086	2,608	2,399
6	2,389	2,987	2,748
7	2,693	3,366	3,097
8	2,996	3,746	3,445
Each Add. Member	+304	+380	+349
Gross Monthly Income Eligibility Standards for Households Where Elderly Disabled Are a Separate Household (165 Percent of Poverty Level)			
1	$1,107	$1,385	$1,274
2	1,492	1,866	1,716
3	1,877	2,348	2,159
4	2,262	2,829	2,602
5	2,647	3,310	3,045
6	3,032	3,791	3,487
7	3,417	4,273	3,930
8	3,802	4,754	4,373
Each Add. Member	+385	+482	+443

[1] Includes District of Columbia, Guam, and the Virgin Islands.

Thrifty Food Plan (TFP) and Allotments

As provided for in section 3(o) of the Act, the TFP is a plan for the consumption of foods of different types (food groups) that a household might use to provide nutritious meals and snacks for household members. The plan reflects a diet required to feed a family of four persons consisting of a man and a woman aged 20 to 50, a child 6 to 8 and a child 9 to 11. The cost of the TFP is adjusted monthly to reflect changes in the costs of the food groups.

The TFP is also the basis for establishing food stamp allotments. *Allotment* is defined in section 3(a) of the Act as ''the total value of coupons a household is authorized to receive during each month.'' Food stamp allotments are adjusted periodically to reflect the changes in food cost levels indicated in the changing amounts of the TFP. Prior to the amendment of section 3(o) of the Act by section 804 of Pub. L. 104–193, the Personal Responsibility and Work Opportunity Reconciliation Act of 1996, allotment amounts were established on each October 1 at 103% of the cost of the TFP in the previous June. Amended section 3(o)(4) of the Act now provides that the TFP will be adjusted each October 1 to reflect the exact cost, or 100%, of the TFP for the previous June, rounding the results to the nearest lower dollar increment for each household size, except that on October 1,1996, the TFP was not to have been reduced below the amounts in effect on September 30, 1996.

To obtain the maximum food stamp allotment for each household size for the period October 1, 1998, to September 30, 1999, June 1998 TFP costs for the above described four-person household were divided by four, multiplied by the appropriate household size and economy of scale factor, in accordance with section 3(o)(1) of the Act, and the final result was rounded down to the nearest dollar. The maximum benefit, or allotment, is paid to households with no net income. For a household with income, the household's allotment is determined by reducing the maximum allotment for the household's size by 30 percent of the individual household's net income in accordance with section 8(a) of the Act, 7 U.S.C. 2017(a). The following table shows the current allotments for the 48 States and the District of Columbia.

FOOD STAMP PROGRAM—OCTOBER 1, 1998—SEPTEMBER 30, 1999

[Maximum Food Stamp Allotments]

Household size	48 States and the District of Columbia
1	$125
2	230
3	329
4	419
5	497
6	597
7	659
8	754
Each Additional Person	+94

Dated: April 26, 1999.

Samuel Chambers, Jr.,

Administrator, Food and Nutrition Service

[FR Doc. 99–11758 Filed 5–10–99; 8:45 am]

BILLING CODE 3410–30–P

DEPARTMENT OF AGRICULTURE

Forest Service

Tongass Land and Resource Management Plan Revision; Tongass National Forest, AK

AGENCY: Forest Service, USDA.

ACTION: Notice; record of decision.

SUMMARY: The Forest Service gives notice that on April 13, 1999, the Under Secretary for Natural Resources and Environment approved a new Record of Decision (1999 ROD) for the final Environmental Impact Statement on the Tongass Land Management Plan Revision, The Under Secretary's decision adopts, with modifications, Alternative 11 of the Final Environmental Impact Statement. As modified, Alternative 11 consists of extensive standards and guidelines, including land allocations, that comprise a comprehensive ecosystem management strategy. The modifications are set out in the body of the 1999 ROD and amplified in Appendix B of the 1999 ROD.

DATES: The Under Secretary signed the new Record of Decision on April 13, 1999.

ADDRESSES: Copies of the 1999 Record of Decision and the Final Environmental Impact Statement are available from the Tongass National Forest, Alaska Region, Forest Service, USDA, PO Box 309, Petersburg, AK 99833.

FOR FURTHER INFORMATION CONTACT: Merrily Jones, Public Affairs Office, Tongass National Forest, Alaska Region, Forest Service, USDA; telephone: (907) 772–3841 or fax: (907) 772–5895.

SUPPLEMENTARY INFORMATION: The Final Environmental Impact Statement on the Tongass Land Management Plan Revision was filed with the Environmental Protection Agency (EPA) and notice of its availability was published in the **Federal Register** by EPA on June 27, 1997 (62 FR 34745). The 1999 Record of Decision (ROD) presents a comparison of the alternatives considered in the Final Environmental Impact Statement and described the rational for the alternatives elected. This decision is not appealable under Forest Service administrative appeal procedures.

The Forest Supervisor will mail a copy of the 1999 ROD to persons and organizations on mailing lists associated with the Tongass planning endeavor.

The 1999 ROD is also available on the Tongass National Forest's worldwide web site at: http:www.fs.fed. us/r10/ tongass in portable document format (pdf). That site includes additional related information such as a summary of changes, a press release, and a comparison table showing key components of the Tongas decisions in 1979, 1997, and 1999.

Dated: May 6, 1999.

Gloria Manning,

Acting Associate Chief for National Forest Systems.

[FR Doc. 99–11878 Filed 5–10–99; 8:45 am]

BILLING CODE 3410–11–M

DEPARTMENT OF COMMERCE

Economics and Statistics Administration

Renewal of Secretary's 2000 Census Advisory Committee

AGENCY: Economics and Statistics Administration, Department of Commerce.

ACTION: Notice of renewal.

SUMMARY: In accordance with the provisions of the Federal Advisory Committee Act, 5 U.S.C. App. 2, and after concurrence of the General Services Administration, the Secretary of Commerce has determined that the renewal of the 2000 Census Advisory Committee is in the public interest in connection with the performance of duties imposed on the Department by law.

EFFECTIVE DATE: March 16, 1999.

FOR FURTHER INFORMATION CONTACT: Maxine Anderson-Brown, Committee Liaison Officer, Department of Commerce, Bureau of the Census, Room 1647, Federal Building 3, Washington,

DC 20233; telephone 301–457–2308, TDD 301–457–2540.

SUPPLEMENTARY INFORMATION: The Committee considers the goals of Census 2000 and user needs for information provided by that census, and provides an outside user perspective about how operational planning and implementation methods proposed for Census 2000 will realize those goals and satisfy those needs. The 2000 Census Advisory Committee provides an opportunity for an open process that informs and welcomes public comment about all aspects of Census 2000. The Committee provides a targeted review focused on the conduct of Census 2000.

The 2000 Census Advisory Committee functions solely as an advisory body and complies fully with the provisions of the Federal Advisory Committee Act. The Committee consists of a Chair, Vice Chair, and a designated representative from each member organization. The Committee is composed of up to forty (40) member organizations. Sixteen (16) ex-officio members are invited to serve in a nonvoting capacity. Ex-officio members are representatives of the Postmaster General, the Chairperson and Ranking Members of the Census Oversight and Appropriations Committees and Subcommittees. The Census Advisory Committees on the African American Population, the American Indian and Alaska Native Populations, the Asian and Pacific Islander Populations, and the Hispanic Population designate one member, as a representative of those four committees, to serve as an ex-officio member. Also, the Committee may include up to four additional nonorganizational members that are appointed by, and serve at the pleasure of, the Secretary.

The Designated Federal Official for the Advisory Committee is the Principal Associate Director for Programs at the Bureau of the Census, reporting through the Under Secretary of Economic Affairs, to the Secretary of Commerce.

The Department of Commerce will file copies of the Committee's renewal charter with appropriate committees in Congress.

Dated: May 4, 1999.

Lee Price,

Acting Under Secretary for Economic Affairs, Economics and Statistics Administration.

[FR Doc. 99–11592 Filed 5–10–99; 8:45 am]

BILLING CODE 3510–07–M

DEPARTMENT OF COMMERCE

International Trade Administration

[A–570–827]

Certain Cased Pencils From the People's Republic of China; Notice of Amended Final Determination of Sales at Less Than Fair Value and Amended Antidumping Duty Order in Accordance With Final Court Decision

AGENCY: Import Administration, International Trade Administration, U.S. Department of Commerce.

ACTION: Notice of Amended Final Determination of Sales at Less Than Fair Value and Amended Antidumping Duty Order in Accordance With Final Court Decision on Certain Cased Pencils from the People's Republic of China.

SUMMARY: On February 2, 1999, the US Court of Appeals for the Federal Circuit issued a mandate affirming the US Court of International Trade's affirmation of the Department of Commerce's voluntary remand results of the final determination of sales at less than fair value in the antidumping duty investigation of certain cased pencils from the People's Republic of China. As there is now a final and conclusive court decision in this action, we are amending our final determination and our antidumping duty order.

EFFECTIVE DATE: May 11, 1999.

FOR FURTHER INFORMATION CONTACT: Roy Malmrose or Melani Miller, Import Administration, International Trade Administration, US Department of Commerce, 14th Street and Constitution Avenue, NW., Washington DC 20230; telephone: (202) 482–5414 and (202) 482–0116, respectively.

SUPPLEMENTARY INFORMATION:

Background

On November 8, 1994, the Department of Commerce (''the Department'') published in the **Federal Register** its final determination of sales at less than fair value (''LTFV'') on certain cased pencils from the People's Republic of China (''PRC'') (59 FR 55625). Subsequent to the publication of the Department's final determination, the petitioners and the respondents challenged this determination before the US Court of International Trade (''CIT''). The Department requested a voluntary remand after concluding that it was appropriate to re-open the administrative record for both factual information and argument to allow parties an opportunity to address the issues of the appropriate prices for US basswood and the appropriate methodology for valuing slats and logs. On March 22, 1996, the Department filed its remand determination with the CIT.

Following the filing of the Department's remand determination, the CIT, on November 13, 1997, affirmed the Department's remand results in *Writing Instrument Manufacturers Association, Pencil Section, et. al.* v. *United States,* 984 F.Supp. 629 (CIT 1997), and upheld the Department on all other challenged aspects of the final determination. Consistent with the US Court of Appeals for the Federal Circuit's (''Federal Circuit'') decision in *Timken Co.* v. *United States,* 893 F.2d 337 (Fed. Cir. 1990), the Department published a ''Notice of Court Decision'' in the **Federal Register** on December 11, 1997 (62 FR 65243). Pursuant to section 516A(e) of the Tariff Act of 1930, as amended (''the Act''), this notice ordered the continued suspension of liquidation of any subject merchandise entered, or withdrawn from warehouse, for consumption until a final and conclusive decision in the case was reached.

In its Notice of Court Decision, the Department also announced that it would instruct the Customs Service to begin suspension of liquidation, effective November 23, 1997, with respect to subject merchandise produced and exported by China First Co. Ltd. (''China First'') pending a final and conclusive court decision in this action. While exports of merchandise produced by China First were originally excluded from the antidumping order, the Department's remand determination found that merchandise exported and produced by China First was, in fact, sold at LTFV.

On February 2, 1999, the Federal Circuit issued its mandate affirming its December 11, 1998, judgement in *Writing Instrument Manufacturers Association, Pencil Section, et. al.* v. *United States,* Appeal Nos. 98–1178 and 98–1202 (Fed. Cir., December 11, 1998). This December 11 judgement affirmed the CIT's November 13, 1997, decision which upheld the Department's final and remand determinations in all aspects.

As there is now a final and conclusive court decision with respect to this proceeding, we are amending our final results of review and antidumping order accordingly.

Inclusion in the Application of the Antidumping Duty Order

As discussed above and pursuant to the affirmed remand determination, China First is no longer excluded from the antidumping duty order issued in

this case (*see Antidumping Duty Order: Certain Cased Pencils from the PRC,* 59 FR 66909 (December 28, 1994)) (''*Antidumping Duty Order*''). Therefore, as noted above, subject merchandise exported by China First, irrespective of the identity of the producer, will be subject to a rate of 8.60 percent.

Amendment to Final Determination and Antidumping Order

Because there is now a final and conclusive decision in this court proceeding, effective as of the publication date of this notice, the final dumping margins and the PRC country-wide (''all others'') rate are as follows:

Manufacturer/producer/exporter	Margin percentage
China First	8.60
Shanghai Lansheng Corp	19.36
Shanghai Foreign Trade Corp	11.15
Guangdong Stationery/Three Star Stationery	0.00
Guangdong Stationery/all other producers	53.65
PRC country-wide rate	53.65

The above-listed rate for Shanghai Lansheng Corp. (''Shanghai Lansheng'') will not affect that company's deposit or assessment rates for any segment of this proceeding. Since publication of the LTFV final determination and order, the Department has completed, pursuant to section 751(a) of the Act, an administrative review covering Shanghai Lansheng's entries for the period December 21, 1994, through November 30, 1995. (*See Certain Cased Pencils from the People's Republic of China; Final Results of Antidumping Duty Administrative Review,* 62 FR 24636 (May 6, 1997) and *Preliminary Results and Partial Rescission of Antidumping Duty Administrative Review,* 62 FR 1734 (January 13, 1997) (''1994–1995 Review''). In that review, the Department determined that Shanghai Lansheng was no longer entitled to a separate rate, and its entries for that period will be assessed at the PRC country-wide rate, which is also its cash deposit rate. Therefore, pursuant to our determination in the 1994–1995 Review, we will continue to instruct the Customs Service to collect a cash deposit rate of 53.65 for Shanghai Lansheng.

Also, as was noted above, China First is no longer excluded from the antidumping duty order issued in this case. Therefore, the Department will instruct the Customs Service to collect a cash deposit rate of 8.60 percent for China First. Guangdong Stationery/Three Star Stationery continues to be excluded from the antidumping order (*see Antidumping Duty Order*).

In all other cases, the Department will instruct the Customs Service to change the cash deposit requirements in accordance with the above rates.

Dated: May 5, 1999.

Robert S. LaRussa,

Assistant Secretary for Import Administration.

[FR Doc. 99–11889 Filed 5–10–99; 8:45 am]

BILLING CODE 3510–DS–P

DEPARTMENT OF COMMERCE

International Trade Administration

[A–122–814]

Pure Magnesium From Canada; Preliminary Results of Antidumping Duty Administrative Review and Notice of Intent Not To Revoke Order in Part

AGENCY: Import Administration, International Trade Administration, Department of Commerce.

ACTION: Notice of preliminary results of 1997–1998 administrative review and intent not to revoke.

SUMMARY: The Department of Commerce is conducting an administrative review of the antidumping duty order on pure magnesium from Canada. The period of review is August 1, 1997 through July 31, 1998. This review covers imports of pure magnesium from one producer/exporter.

We have preliminarily found that sales of subject merchandise have not been made below normal value. Further, we intend not to revoke the order with respect to pure magnesium from Canada produced by Norsk Hydro Canada Inc. If these preliminary results are adopted in our final results, we will instruct the Customs Service not to assess antidumping duties.

Interested parties are invited to comment on these preliminary results. We will issue the final results not later than 120 days from the date of publication of this notice.

EFFECTIVE DATE: May 11, 1999.

FOR FURTHER INFORMATION CONTACT: Zak Smith or Melani Miller, Import Administration, International Trade Administration, U.S. Department of Commerce, 14th Street and Constitution Avenue, N.W., Washington D.C. 20230; telephone (202) 482–0189 or (202) 482–0116, respectively.

The Applicable Statute and Regulations

Unless otherwise indicated, all citations to the statute are references to the provisions effective January 1, 1995, the effective date of the amendments made to the Tariff Act of 1930 (''the Act'') by the Uruguay Round Agreements Act. In addition, unless otherwise indicated, all citations to the Department of Commerce's (''the Department's'') regulations refer to the regulations, codified at 19 CFR part 351 (62 FR 27399, May 19, 1997).

Background

The Department published an antidumping duty order on pure magnesium from Canada on August 31, 1992 (57 FR 39390). On August 11, 1998, the Department published a notice of ''Opportunity to Request an Administrative Review'' of the antidumping duty order on pure magnesium from Canada (63 FR 42821). On August 25, 1998, Magnesium Corporation of America (the ''petitioner'') requested an administrative review of imports of the subject merchandise produced by Norsk Hydro Canada Inc. (''NHCI'') during the period August 1, 1997, through July 31, 1998. NCHI made a similar request for review on August 28, 1998. In accordance with 19 CFR 351.221, we initiated the review on September 29, 1998. The Department is now conducting this administrative review in accordance with section 751 of the Act.

Scope of Review

The product covered by this review is pure magnesium. Pure unwrought magnesium contains at least 99.8 percent magnesium by weight and is sold in various slab and ingot forms and sizes. Granular and secondary magnesium are excluded from the scope currently classifiable under subheading 8104.11.0000 of the Harmonized Tariff Schedule (''HTS''). The HTS item number is provided for convenience and for customs purposes. The written description remains dispositive.

Export Price

For sales to the United States, we used export price (''EP'') as defined in section 772(a) of the Act because the merchandise was sold directly to the first unaffiliated purchaser in the United States prior to importation. The use of constructed export prices was not warranted based on the facts of the record. EP was based on the packed, delivered, duties unpaid price to unaffiliated purchasers in the United States. We made a deduction for movement expenses in accordance with section 772(c)(2)(A) of the Act; this included the foreign and U.S. inland freight expenses.

Normal Value

We compared the aggregate quantity of home market and U.S. sales and determined that the quantity of the company's sales in its home market was more than five percent of the quantity of its sales to the U.S. market. Consequently, pursuant to section 773(a)(1) of the Act, we based normal value (''NV'') on home market sales.

We made adjustments for differences in packing in accordance with sections 773(a)(6)(A) and B(i) of the Act. We also made adjustments for movement expenses, consistent with section 773(a)(6)(B)(ii) of the Act, for inland freight. In addition, we made adjustments for differences in circumstances of sale (''COS'') in accordance with section 773(a)(6)(C)(iii) of the Act and 19 CFR 351.410. We made COS adjustments by deducting direct selling expenses incurred on home market sales (credit expenses) and adding U.S. direct selling expenses (credit expenses).

Revocation

Pursuant to 19 CFR 351.222(b)(2), NHCI requested revocation of the antidumping duty order, in part. In accordance with 19 CFR 351.222(e), the request was accompanied by certifications that NHCI had not sold the subject merchandise at less than normal value during the current period of review and would not do so in the future. NHCI further certified that it sold the subject merchandise to the United States in commercial quantities for a period of at least three consecutive years. NHCI also agreed to immediate reinstatement of the antidumping duty order, as long as any exporter or producer is subject to the order, if the Department concludes that NHCI, subsequent to the revocation, sold the subject merchandise at less than normal value.

We must determine, as a threshold matter, in accordance with 19 CFR 351.222, whether the company requesting revocation sold the subject merchandise in commercial quantities in each of the three years forming the basis of the request. *See* Pure Magnesium From Canada; Final Results of Antidumping Duty Administrative Review and Determination Not to Revoke Order in Part, 64 FR 12977, 12978 (March 16, 1999) (''Fifth Review''). In the Fifth Review, we determined that NHCI did not sell the subject merchandise in the United States in commercial quantities in any of the three years cited by NHCI to support its request for revocation. Two of those three years have been cited by NHCI in support of its current request for revocation. Based on our findings in the Fifth Review, we preliminarily find that NHCI does not qualify for revocation of the order on pure magnesium because it does not have three consecutive years of sales in commercial quantities at not less than normal value, as provided for in 19 CFR 351.222(b) and (e)(1)(ii). Therefore, we do not need to address the issue of whether NHCI's sales in the current review period were in commercial quantities.

Preliminary Results of the Review

As a result of this review, we preliminarily determine that NHCI's margin for the period August 1, 1997, through July 31, 1998, is zero.

Any interested party may request a hearing within 30 days of publication. Any hearing, if requested, will be held 42 days after the publication of this notice, or the first workday thereafter. Issues raised in the hearing will be limited to those raised in the respective case and rebuttal briefs. Interested parties may submit case briefs within 30 days of the date of publication of this notice. Rebuttal briefs, which must be limited to issues raised in the case briefs, may be filed not later than 35 days after the date of publication of this notice.

Parties who submit case briefs or rebuttal briefs in this proceeding are requested to submit with each argument (1) a statement of the issue and (2) a brief summary of the argument with an electronic version included. The Department will publish the final results of this administrative review subsequently, including the results of its analysis of issues raised in any such written briefs or hearing. The Department will issue final results of this review within 120 days of publication of these preliminary results.

Furthermore, the following deposit requirements will be effective upon completion of the final results of this administrative review for all shipments of pure magnesium from Canada entered, or withdrawn from warehouse, for consumption on or after the publication date of the final results of this administrative review, as provided by section 751(a)(1) of the Act: (1) The cash deposit rate for the reviewed company will be the rate established in the final results of this administrative review (except no cash deposit will be required for the company if its weighted-average margin is de minimis, i.e., less than 0.5 percent); (2) for merchandise exported by manufacturers or exporters not covered in this review but covered in the original less than fair value investigation or a previous review, the cash deposit will continue to be the most recent rate published in the final determination or final results for which the manufacturer or exporter received an individual rate; (3) if the exporter is not a firm covered in this review, the previous review, or the original investigation, but the manufacturer is, the cash deposit rate will be the rate established for the most recent period for the manufacturer of the merchandise; and (4) if neither the exporter nor the manufacturer is a firm covered in this or any previous reviews, the cash deposit rate will be 21 percent, the ''all others'' rate established in Pure Magnesium from Canada; Amendment of Final Determination of Sales At Less Than Fair Value and Order in Accordance With Decision on Remand (58 FR 62643, November 29, 1993).

This notice serves as a preliminary reminder to importers of their responsibility to file a certificate regarding the reimbursement of antidumping duties prior to liquidation of the relevant entries during this review period. Failure to comply with this requirement could result in the Secretary's presumption that reimbursement of antidumping duties occurred and the subsequent assessment of double antidumping duties.

We are issuing and publishing these results in accordance with sections 751(a)(1) and 777(i)(1) of the Act.

Dated: May 3, 1999.

Robert S. LaRussa,

Assistant Secretary for Import Administration.

[FR Doc. 99–11886 Filed 5–10–99; 8:45 am]

BILLING CODE 3510–DS–P

DEPARTMENT OF COMMERCE

INTERNATIONAL TRADE ADMINISTRATION

[C–122–834]

Preliminary Negative Countervailing Duty Determination; Live Cattle From Canada

AGENCY: Import Administration, International Trade Administration, Department of Commerce

EFFECTIVE DATE: May 11, 1999.

FOR FURTHER INFORMATION CONTACT: Zak Smith, Stephanie Hoffman, James Breeden, or Melani Miller Office I, AD/CVD Enforcement, Import Administration, U.S. Department of Commerce, Room 3099, 14th Street and Constitution Avenue, N.W., Washington, D.C. 20230; telephone (202) 482–0189, (202) 482–4198, (202)

482–1174, or (202) 482–0116, respectively.

Preliminary Determination

The Department of Commerce preliminarily determines that countervailable subsidies are not being provided to producers and exporters of live cattle in Canada.

Petitioner

The petition in this investigation was filed on November 12, 1998, by the Ranchers-Cattlemen Action Legal Foundation (R-Calf, referred to hereafter as the ''petitioner'').

Case History

Since the publication of the notice of initiation in the **Federal Register** (*see* Initiation of Countervailing Duty Investigation of Live Cattle From Canada, 63 FR 71889 (December 30, 1998) (''Notice of Initiation'')), the following events have occurred. On January 28, 1999, we issued a countervailing duty questionnaire to the Government of Canada (''GOC''). In our questionnaire, we indicated that we would be limiting our investigation to the four largest cattle producing provinces in Canada: Alberta, Manitoba, Ontario, and Saskatchewan. Thus, we have not investigated provincial or federal/provincial programs that are not related to the above four provinces. Specifically, we have not included in our investigation the following programs included in our Notice of Initiation: the British Colombia Livestock Feeder Loan Guarantee Program, the Quebec Farm Financing Act, the Technology Innovation Program Under the Agri-Food Agreement, and the Quebec Farm Income Stabilization Insurance Program (FISI).

On January 27, 1999, we postponed the preliminary determination of this investigation until May 3, 1999 (*see* Postponement of Preliminary Countervailing Duty Determination: Live Cattle From Canada, 64 FR 4073) on the basis that it was extraordinarily complicated.

We received a response to our initial questionnaire from the GOC, which included responses from the provincial governments of Alberta (''the GOA''), Manitoba (''the GOM''), Ontario (''the GOO''), and Saskatchewan (''the GOS''), on March 24 and April 8, 1999. On March 24, 1999, the petitioner filed an indirect subsidy allegation regarding silage production. However, there was insufficient evidence to support its claim; therefore, we are not investigating that allegation. On April 7 and 13, 1999, we issued supplemental questionnaires to the GOC and received responses to the supplemental questionnaires on April 16 and 22, 1999.

Scope of Investigation

For purposes of this investigation, the product covered is all live cattle except imports of dairy cows for the production of milk for human consumption and purebred cattle specially imported for breeding purposes and other cattle specially imported for breeding purposes.

The merchandise subject to this investigation is currently classifiable under subheading 0102.90.40 of the Harmonized Tariff Schedule of the United States (''HTSUS''), with the exception of 0102.90.40.72 and 0102.90.40.74. Although the HTSUS subheadings are provided for convenience and customs purposes, the Department's written description of the scope of this proceeding is dispositive.

The Applicable Statute and Regulations

Unless otherwise indicated, all citations to the statute are references to the provisions of the Tariff Act of 1930, as amended by the Uruguay Round Agreements Act (''URAA'') effective January 1, 1995 (''the Act''). In addition, unless otherwise indicated, all citations to the Department of Commerce's (''the Department's'') regulations are to the current regulations as codified at 19 CFR Part 351 (April 1998). Although Subpart E of 19 CFR Part 351, published on Novemer 25, 1998 (63 FR 65348) does not apply to this investigation, Subpart E represents the Department's interpretation of the requirements of the Act. *See* 19 CFR 351.702(b).

Injury Test

Because Canada is a ''Subsidies Agreement Country'' within the meaning of section 701(b) of the Act, the International Trade Commission (''ITC'') is required to determine whether imports of the subject merchandise from Canada materially injure, or threaten material injury to, a U.S. industry. On January 25, 1999, the ITC published its preliminary determination finding that there is a reasonable indication that an industry in the United States is being materially injured, or threatened with material injury, by reason of imports from Canada of the subject merchandise (*ee* 64 FR 3716).

Period of Investigation

The period for which we are measuring subsidies (''the POI'') is the GOC's fiscal year, April 1, 1997, through March 31, 1998.

Subsidies Valuation Information

Allocation Period

We have used three years as the allocation period in this investigation. Based on information provided by the petitioner, three years is the average useful life (''AUL'') of productive assets for the Canadian cattle industry. Parties are not contesting this AUL.

Subsidy Rate Calculation

Due to the extremely large number of cattle producers in Canada, we have collected subsidy information on an industry-wide or ''aggregate'' basis (*i.e.*, the total amount of benefits provided under a particular program). Moreover, as noted above, we have limited our investigation to the four largest cattle producing provinces in Canada. Therefore, unless otherwise noted, for each program preliminarily found to be countervailable, we have calculated the ad valorem subsidy rate by dividing the total amount of the benefit attributed to cattle producers in the four relevant provinces during the POI by the total sales of all cattle in the same four provinces.

Benchmarks for Long-Term Loans and Discount Rates

To calculate the countervailable benefit from loans and nonrecurring grants, we have used a previously verified benchmark interest rate charged by Canadian commercial banks on loans made to the farming sector. This rate is equal to the prime rate plus one and one-half percentage points. *See* Live Swine From Canada; Preliminary Results of Countervailing Duty Administrative Review, 63 FR 23723, 23726 (April 30, 1998). Accordingly, we have used the average prime rates based on the figures published by the Bank of Canada plus one and one-half percentage points.

Loan Guarantee Programs

For certain loan guarantee programs that we have preliminarily found to be countervailable, the respondents were unable to provide the specific loan information required to perform a precise calculation of the countervailable benefit attributable to cattle producers during the POI. Their inability to provide the data arose because of the nature of the underlying loan instrument (*i.e.*, lines of credit which had no predetermined time frame for the disbursal of principal or set repayment schedule), the extremely large number of loans provided, and the large number of transactions (withdrawals and payments) conducted pursuant to those loans. Therefore, for

these programs, we have estimated the countervailable benefit by calculating the difference between the interest actually paid in the POI and the interest that would have been paid for a commercial loan absent a guarantee. *See* Extruded Rubber Thread From Malaysia: Final Affirmative Countervailing Duty Determination and Countervailing Duty Order, 57 FR 38472 (August 25, 1992). In effect, we are applying our short-term loan methodology to these long-term loan instruments. This approach does not yield a precise measure of the benefit because the loan instruments being examined are effectively lines of credit with balances and interest rates varying from month-to-month. Nonetheless, we believe this methodology is reasonable under the circumstances presented by this investigation.

Also, the respondents reported various fees they paid in connection with the guaranteed loans. However, the information they presented with respect to fees payable on commercial loans was unclear. So, as to avoid a comparison of nominal benchmark rates with effective interest rates on the government-guaranteed loans, we have generally not included the fees in calculating the amounts paid under the government-guaranteed loans. Consequently, we are comparing nominal rates to nominal rates. The one exception to this is the fee specifically paid to FIMCLA for the guarantee, which is an allowable offset under section 771(6)(A) of the Act. We intend to seek further information on the fees that would be paid on commercial loans for our final determination.

I. Programs Preliminarily Determined To Be Countervailable

Loan and Loan Guarantee Programs

A. Farm Improvement and Marketing Cooperative Loans Act (''FIMCLA'')

FIMCLA provides federal government guarantees on loans extended by private commercial banks and other lending institutions to farmers across Canada. Created in 1987, the purpose of this program is to increase the availability of loans for the improvement and development of farms and the marketing, processing and distribution of farm products by cooperative associations. Persons engaged in farming operations are eligible for a FIMCLA guarantee if the loan is for one of the following activities: purchase or repair of tools, purchase or repair of machinery, purchase of livestock, alteration or improvement of machinery, erection or construction of fencing or works for drainage, construction or alteration of any building or structure on a farm, or the purchase of additional land. FIMCLA guarantees payment to the lender of up to 95 percent of any loss on a loan made under a FIMCLA loan guarantee. The maximum amount of money that an individual can borrow under this program is C$250,000. For marketing cooperatives, the maximum amount is C$3,000,000. The GOC reported that beef and hog farmers, which are categorized as one group by the FIMCLA administration, received approximately 25 to 30 percent of all guarantees between 1994 and 1998, while other users such as poultry, fruit and vegetables, and dairy producers received less than ten percent of the guarantees.

A loan guarantee is a financial contribution, as described in section 771(5)(D)(i) of the Act, which provides a benefit to the recipients equal to the difference between the amount the recipients of the guarantee pay on the guaranteed loans, after adjusting for guarantee fees, and the amount the recipients would pay for a comparable commercial loan absent the guarantee. Because the beef and pork industries received a disproportionate share of benefits between 1994 and 1998, we preliminarily determine that the program is specific under section 771(5A)(D)(iii) of the Act. Therefore, we preliminarily determine that these loan guarantees are countervailable subsidies, to the extent that they lower the cost of borrowing, within the meaning of section 771(5) of the Act.

In its questionnaire response, the GOC provided a sample of loans guaranteed under the program for beef and hog producers throughout Canada. Because of the large number of loans reported, we agree with the GOC's argument that this sample yields an accurate reflection of all loans provided to beef and hog producers that receive FIMCLA guarantees.

To calculate the subsidy conferred by this program, we used our long-term fixed-rate or variable-rate loan methodology (depending on the terms of the reported loans) to compute the total benefit on the sampled loans. We then calculated the subsidy per dollar loaned to beef and hog producers. This ratio was multiplied by the total value of guaranteed loans outstanding to beef and hog producers in the POI to arrive at the total subsidy. We then divided the total subsidy attributable to the POI by Canada's total sales of live cattle during the POI. On this basis, we preliminarily determine the total benefit from this program to be 0.05 percent ad valorem. Ideally, the denominator used to calculate the total benefit from this program would include Canadian hog sales, but the GOC did not provide the necessary sales data.

B. Alberta Feeder Associations Guarantee Program

The Alberta Feeder Associations Guarantee Act was established in 1938 to encourage banks to lend to cattle producers. The program is administered by the Alberta Department of Agriculture, Food and Rural Development. Under this program, up to 15 percent of the principal amount of commercial loans taken out by feeder associations for the acquisition of cattle is guaranteed. Eligibility for the guarantees is limited to feeder associations located in Alberta. Sixty-two associations received guarantees on loans which were outstanding during the POI.

A loan guarantee is a financial contribution, as described in section 771(5)(D)(i) of the Act, which provides a benefit to the recipients equal to the difference between the amount the recipients of the guarantee pay on the guaranteed loans and the amount the recipients would pay for a comparable commercial loan absent the guarantee. Because eligibility is limited to feeder associations, we preliminarily determine that the program is specific under section 771(5A)(D)(i) of the Act. Therefore, we preliminarily determine that these loan guarantees are countervailable subsidies, to the extent that they lower the cost of borrowing, within the meaning of section 771(5) of the Act.

To calculate the subsidy conferred by the loan guarantees we applied our short-term loan methodology and compared the amount of interest actually paid during the POI by the associations to the amount that would have been paid at the benchmark rate, as described in the *Subsidies Valuation Information* section, above. We then divided the associations' interest savings by the investigated provinces' total sales of live cattle during the POI. On this basis, we preliminarily determine the total benefit from this program to be 0.04 percent ad valorem.

C. Manitoba Cattle Feeder Associations Loan Guarantee Program

The Manitoba Cattle Feeder Associations Loan Guarantee Program was established in 1991 to assist in the diversification of Manitoba farm operations. The program is currently administered by the Manitoba Agricultural Credit Corporation (''MACC''). The provincial government, through MACC, guarantees 25 percent of the principal amount of loans for the

acquisition of livestock by feeder associations. Eligibility for the guarantees is limited to feeder associations located in Manitoba. Associations must be incorporated under the Cooperatives Act of Manitoba, have a minimum of fifteen members, an elected board of directors, and a registered brand for use on association cattle. Ten associations received guarantees on loans which were outstanding during the POI.

A loan guarantee is a financial contribution, as described in section 771(5)(D)(i) of the Act, which provides a benefit to the recipients equal to the difference between the amount the recipients of the guarantee pay on the guaranteed loans and the amount the recipients would pay for a comparable commercial loan absent the guarantee. Because eligibility is limited to feeder associations, we preliminarily determine that the program is specific under section 771(5A)(D)(i) of the Act. Therefore, we preliminarily determine that these loan guarantees are countervailable subsidies, to the extent that they lower the cost of borrowing, within the meaning of section 771(5) of the Act.

To calculate the subsidy conferred by the loan guarantees, we applied our short-term loan methodology and compared the amount of interest actually paid during the POI by the associations to the amount that would have been paid at the benchmark rate, as described in the *Subsidies Valuation Information* section, above. We then divided the associations' interest savings by the investigated provinces' total sales of live cattle during the POI. On this basis, we preliminarily determine the total benefit from this program to be less than 0.01 percent ad valorem.

D. Ontario Feeder Cattle Loan Guarantee Program

The Ontario Feeder Cattle Loan Program was established in 1990 to assist cattle producers. The program is administered by the Ontario Ministry of Agriculture, Food and Rural Affairs (''OMAFRA''). OMAFRA provides a start-up grant of $10,000 to new feeder associations and a 25 percent government guarantee on loans to associations for the purchase and sale of cattle. Eligibility for the guarantees is limited to feeder associations which have at least twenty individuals who own or rent land in Ontario and are not members of other feeder associations. Eighteen associations received guarantees on loans which were outstanding during the POI.

Loan guarantees and grants are financial contributions, as described in section 771(5)(D)(i) of the Act. Loan guarantees provide a benefit to the recipients equal to the difference between the amount the recipients of the guarantee pay on the guaranteed loans and the amount the recipients would pay for a comparable commercial loan absent the guarantee. In the case of grants, the benefit to recipients is the amount of the grant. Because eligibility for the loan guarantees and grants under this program is limited to feeder associations, we preliminarily determine that the program is specific under section 771(5A)(D)(i) of the Act. Therefore, we preliminarily determine that these loan guarantees and grants are countervailable subsidies within the meaning of section 771(5) of the Act.

To calculate the subsidy conferred by the loan guarantees, we applied our short-term loan methodology and compared the amount of interest actually paid during the POI by the associations to the amount that would have been paid at the benchmark rate, as described in the *Subsidies Valuation Information* section, above. We then divided the associations' interest savings by the investigated provinces' total sales during the POI. On this basis, we preliminarily determine the total benefit from this program to be 0.01 percent ad valorem.

Additionally, we preliminary determine that the grants provided under this program are non-recurring because the recipients could not expect to receive them on an on-going basis. However, because the subsidy was below 0.50 percent of the investigated provinces' sales in the year of receipt in each of the relevant years, we expensed the benefit from the grants. For the POI, we divided the grants received during the POI by the investigated provinces' total sales of live cattle during the POI. On this basis we preliminarily determine the countervailable subsidy to be less than 0.01 percent ad valorem.

To calculate the total benefit to cattle producers under this program, we summed the benefit calculated for the loan guarantees and grants. On this basis, we preliminarily determine the total benefit from this program to be 0.01 percent ad valorem.

E. Saskatchewan Feeder Associations Loan Guarantee Program

The Saskatchewan Feeder Associations Loan Guarantee Program was established in 1984 to facilitate the establishment of cattle feeder associations in order to promote cattle feeding in Saskatchewan. The program is administered by the Livestock and Veterinary Operations Branch of the Saskatchewan Agriculture and Food Department. This agency provides a government guarantee for 25 percent of the principal amount on loans to feeder associations for the purchase of feeder heifers and steers. Eligibility for the guarantees is limited to feeder associations with at least twenty members over the age of eighteen, who are not active in other feeder associations. One hundred and sixteen associations received guarantees on loans which were outstanding during the POI.

A loan guarantee is a financial contribution, as described in section 771(5)(D)(i) of the Act, which provides a benefit to the recipients equal to the difference between the amount the recipients of the guarantee pay on the guaranteed loans and the amount the recipients would pay for a comparable commercial loan absent the guarantee. Because eligibility for the guarantees is limited to feeder associations, we preliminarily determine that the program is specific under section 771(5A)(D)(i) of the Act. Therefore, we preliminarily determine that these loan guarantees are countervailable subsidies, to the extent that they lower the cost of borrowing, within the meaning of section 771(5) of the Act.

To calculate the subsidy conferred by the loan guarantees, we applied our short-term loan methodology and compared the amount of interest actually paid during the POI by the associations to the amount that would have been paid at the benchmark rate, as described in the *Subsidies Valuation Information* section, above. We then divided the associations' interest savings by the investigated provinces' total sales during the POI. On this basis, we preliminarily determine the total benefit from this program to be 0.01 percent *ad valorem*.

F. Saskatchewan Breeder Associations Loan Guarantee Program

The Saskatchewan Breeder Associations Loan Guarantee Program was established in 1991 to facilitate the establishment of cattle breeder associations, in an effort to promote cattle breeding in Saskatchewan. The program is administered by the Livestock and Veterinary Operations Branch of the Saskatchewan Agriculture and Food Department. This agency provides a guarantee on 25 percent of the principal amount of loans to breeder associations for the purchase of certain breeding cattle. Eligibility is limited to breeder associations which consist of at least twenty individuals who are residents of Saskatchewan and over the

age of eighteen. One hundred and seven associations received guarantees on loans which were outstanding during the POI.

A loan guarantee is a financial contribution, as described in section 771(5)(D)(i) of the Act, which provides a benefit to the recipients equal to the difference between the amount the recipients of the guarantee pay on the guaranteed loans and the amount the recipients would pay for a comparable commercial loan absent the guarantee. Because eligibility is limited to feeder associations, we preliminarily determine that the program is specific under section 771(5A)(D)(i) of the Act. Therefore, we preliminarily determine that these loan guarantees are countervailable subsidies, to the extent that they lower the cost of borrowing, within the meaning of section 771(5) of the Act.

To calculate the subsidy conferred by the loan guarantees, we applied our short-term loan methodology and compared the amount of interest actually paid during the POI by the associations to the amount that would have been paid at the benchmark rate, as described in the *Subsidies Valuation Information* section, above. We then divided the associations' interest savings by the investigated provinces' total sales during the POI. On this basis, we preliminarily determine the total benefit from this program to be 0.01 percent *ad valorem*.

Provision of Goods or Services

G. Prairie Farm Rehabilitation Community Pasture Program

The Prairie Farm Rehabilitation Administration (''PFRA'') was created in the 1930s to rehabilitate drought and soil drifting areas in the Provinces of Manitoba, Saskatchewan, and Alberta. The PFRA established the Community Pasture Program to facilitate improved land use through its rehabilitation, conservation, and management. The goal of the common Pasture Program is to utilize the resource primarily for the summer grazing of cattle to encourage long-term production of high quality cattle. In pursuit of its objectives, the PFRA operates 87 separate pastures encompassing approximately 2.2 million acres. At these pastures, the PFRA offers grazing privileges and optional breeding services for fees as established by PFRA. The fees are based upon recovery of the costs associated with the grazing and breeding services.

The provision of a good or service is a financial contribution as described in section 771(5)(D)(iii) of the Act. To determine whether a benefit is conferred in the provision of the service, it is necessary to examine whether the provider receives adequate remuneration. According to section 771(5)(E) of the Act, the adequacy of remuneration with respect to a government's provision of a good or service ''* * * shall be determined in relation to prevailing market conditions for the good or service being provided or the goods being purchased in the country which is subject to the investigation or review. Prevailing market conditions include price, quality, availability, marketability, transportation, and other conditions of purchase or sale.'' Therefore, to judge the adequacy of remuneration we compared the prices charged for public pasture services to those charged by private providers. Based on this comparison, we preliminarily determine that the price for private pastures is higher than the price for public pastures. The GOC has argued that lower prices for public pasture services should be expected because the quality of services offered is lower. In particular, cattle in public pastures are commingled, while farmers prefer to graze cattle in an exclusive environment. We have not considered making adjustments for differences in the types of services offered at public and private pastures because the GOC was unable to quantify them.

Because use of Community Pastures is limited to Canadian farmers involved in grazing livestock, we preliminarily determine that the program is specific under section 771(5A)(D)(i) of the Act. Therefore, we preliminarily determine that the provision of public pasture services is a countervailable subsidy within the meaning of section 771(5) of the Act.

To measure the benefit, we calculated the difference between the price for public pasture service and the price for privately provided pasture. This difference was multiplied by the total number of cow/calf pairs serviced by the PFRA during the POI. We treated the resulting amount as a recurring benefit and divided it by the investigated provinces' total sales during the POI. On this basis, we determine the countervailable subsidy to be 0.04 percent ad valorem.

H. Alberta Crown Lands Basic Grazing Program

Over time, Alberta has developed a system for granting grazing rights on public land. Grazing rights began to be issued on public lands in the early 1930s. Today, through Alberta Agriculture and Municipal Affairs, over 10.5 million acres of land are managed by the GOA including a grazing component of approximately two million animal unit months (''AUM's''). AUMs are defined as the amount of forage required to feed one animal for one month while maintaining the vegetative state of the land in good condition.

Leases for grazing rights range from one to twenty year terms, but, in practice, all leases are renewed if the lessee is in good standing. Alberta's Public Lands Act dictates how rental prices will be set. Specifically, section 107 states that annual rent will be equal to a percentage of the forage value of the leased land. When determining the forage value of the land, the administering authority is required to consider the grazing capacity of the land, the average gain in weight of cattle on grass, and the average price per pound of cattle sold in the principal livestock markets in Alberta during the preceding year. Beyond paying the lease fee, lessees are also required to construct and maintain capital improvements necessary for livestock and must comply with all multiple-use and conservation restrictions imposed by the government on the land. Lastly, lessees must pay school and municipal taxes charged on the land being leased.

The provision of a good or service is a financial contribution as described in section 771(5)(D)(iii) of the Act. As discussed above in connection with the PFRA, a benefit is conferred in the provision of a good or service when the prices charged for government-provided goods or services are less than the prices charged by private suppliers. In the case of the Alberta Crown Lands Basic Grazing Program, a simple comparison of the fees charged would not be appropriate because the grazing rights being offered by the GOA differ from those offered by private suppliers. In this regard, the GOA has provided certain quantifiable adjustments. Specifically, we adjusted the private price downward by deducting costs for the construction and maintenance of fences and water improvements, and the cost of paying property taxes. Although the GOA argued that there were other differences that should be taken into account for such things as multiple-use and conservation requirements, we have not considered making adjustments for such costs because the GOA was unable to quantify them. Comparing the public grazing lease to the adjusted private lease price, we preliminarily determine that the price for private leases is higher than the price for a public grazing lease. This provides a benefit to the recipients equal to the difference between the amount the recipients pay for the good

and the amount the recipients would pay for a comparable good.

Because the use of the Alberta Crown Lands Basic Grazing Program is limited to people grazing livestock, we preliminarily determine that the program is specific under section 771(5A)(D)(i) of the Act. Therefore, we preliminarily determine that the provision of public grazing rights is a countervailable subsidy within the meaning of section 771(5) of the Act.

To measure the benefit, we calculated the difference between the price per AUM for a public grazing lease and the adjusted price per AUM for a private grazing lease. We multiplied this difference by the total AUMs provided through Alberta's grazing programs. We treated the resulting amount as a recurring benefit and divided it by the investigated provinces' total sales during the POI. On this basis, we determine the countervailable subsidy to be 0.18 percent ad valorem.

I. Manitoba Crown Lands Program

Agricultural Crown land is managed by Manitoba Agriculture Crown Lands (''MACL'') whose primary objective is to administer the disposition of Crown lands and to improve the lands' productivity. Crown agricultural land is made available to farmers through cultivation and grazing leases. Lease holders are required to pay an amount-in-lieu of municipal taxes as well as to construct and maintain fences and watering facilities. Also, the public has access to Crown lands at all times without prior permission of the lessee for such activities as wildlife hunting, forestry, winter sports, hiking, and berry picking. During the POI, MACL administered 1.6 million acres of grazing leases accounting for 707,699 AUMs.

Leases for grazing dispositions range from one to fifty year terms. MACL sets rental rates each year by multiplying the number of AUMs the leased land is capable of producing in an average year by an annual AUM rental rate. The AUM rental rate is based on recovering the administrative costs for the program using the previous year's actual costs.

The provision of a good or service is a financial contribution as described in section 771(5)(D)(iii) of the Act. As discussed above in connection with the PFRA, a benefit is conferred in the provision of a good or service when the prices charged for government-provided goods or services are less than the prices charged by private suppliers. In the case of the Manitoba Crown Lands Program, a simple comparison of the fees charged would not be appropriate because the grazing rights being offered by the GOM differ from those offered by private suppliers. In this regard, the GOM has provided certain quantifiable adjustments. Specifically, we adjusted the private price downward by deducting costs for the construction and maintenance of fences and watering facilities and the cost of paying an amount-in-lieu of municipal taxes. Although the GOM argued that there were other differences that should be taken into account for such things as multiple-use requirements and the isolated nature of Manitoba's Crown lands, we have not considered making the adjustments for such costs because the GOM was unable to quantify them. Comparing the public grazing lease to the adjusted private lease price, we preliminarily determine that the price for private leases is higher than the price for a public grazing lease.

Because use of the Manitoba Crown Lands Program is limited to people involved in grazing livestock, we preliminarily determine that the program is specific under section 771(5A)(D)(i) of the Act. Therefore, we preliminarily determine that the provision of public grazing rights is a countervailable subsidy within the meaning of section 771(5) of the Act.

To measure the benefit, we calculated the difference between the price per AUM for a public grazing lease and the adjusted price per AUM for a private grazing lease. We multiplied this difference by the total AUM provided by MACL. We treated the resulting amount as a recurring benefit and divided it by the investigated provinces' total sales during the POI. On this basis, we determine the countervailable subsidy to be 0.01 percent *ad valorem*.

J. Saskatchewan Pasture Program

The Saskatchewan Pasture Program has been in place since 1922. It is designed to provide supplemental grazing to Saskatchewan livestock producers and maintain grazing and other fragile lands in permanent cover to promote soil stability. Saskatchewan Agriculture and Food (''SAF'') operates 56 provincial community pastures encompassing 804,000 acres. Through these pastures, the SAF offers grazing, breeding, and health services for fees as established by SAF. Fees are based upon recovery of the costs associated with the grazing and breeding services of each pasture.

The provision of a good or service is a financial contribution as described in section 771(5)(D)(iii) of the Act. As discussed above in connection with the PFRA, a benefit is conferred in the provision of a good or service when the prices charged for government-provided goods or services are less than the prices charged by private suppliers. Based on a comparison of these prices, we preliminarily determine that the price for private pastures is higher than the price for public pastures. The GOS has argued that lower prices for public pasture services should be expected because the quality of services offered is lower. In particular, cattle in public pastures are commingled, while farmers prefer to graze cattle in an exclusive environment. We have not considered making adjustments for differences in the types of services offered at public and private pastures because the GOS was unable to quantify them.

Because use of the Saskatchewan Pasture Program is limited to Canadian farmers involved in grazing livestock, we preliminarily determine that the program is specific under section 771(5A)(D)(i) of the Act. Therefore, we preliminarily determine that the provision of public pasture services is a countervailable subsidy within the meaning of section 771(5) of the Act.

To measure the benefit, we calculated the difference between the price for public pasture service and the price for privately provided pasture. This difference was multiplied by the total number of AUM provided by SAF during the POI. We treated the resulting amount as a recurring benefit and divided it by the investigated provinces' total sales during the POI. On this basis, we determine the countervailable subsidy to be 0.01 percent *ad valorem*.

Other Programs

K. Northern Ontario Heritage Fund Corporation Agriculture Assistance

The Northern Ontario Heritage Fund Corporation (''NOHFC'') was established in 1988 as a Crown corporation for the purpose of promoting and stimulating economic development in northern Ontario. NOHFC focuses on funding infrastructure improvements and development opportunities in northern Ontario. Assistance for these projects is available through forgivable performance loans, incentive term loans, and loan guarantees. With respect to agricultural projects, all assistance provided by NOHFC is in the form of forgivable performance loans. The types of agricultural projects funded include capital projects, marketing projects and research and development projects. Fifty percent of capital project costs may be eligible for funding, up to a maximum of C$2.5 million. For marketing projects, fifty percent of the project costs may receive funding, up to a maximum of C$500,000. For research and development projects, 75 percent of

the project costs may receive funding, up to a maximum of C$500,000. The loans made available to these projects are normally forgiven over two to three years. The extent of debt forgiveness is dependent upon the project meeting its target of increasing the value of farm production by an amount equal to the NOHFC contribution. We do not currently have information on the record as to whether the terms of the loans provide a potential countervailable benefit. However, prior to the issuing of our final determination, we plan on gathering such information.

Debt forgiveness is a financial contribution as described in section 771(5)(D)(i) of the Act, which provides a benefit to the recipients equal to the amount of the debt forgiven. Because benefits under this program are only available in northern Ontario, we preliminarily determine that the program is regionally specific under section 771(5A)(D)(iv) of the Act. Therefore, we preliminarily determine that this debt forgiveness is countervailable within the meaning of section 771(5) of the Act.

We further preliminarily determine that this debt forgiveness is non-recurring because the recipients could not expect to receive it on an ongoing basis. However, because the benefit to cattle producers in Ontario was below 0.50 percent of the investigated provinces' sales in the year of receipt in each of the relevant years, we expensed the debt forgiveness in the year received. To calculate the benefit for the POI, we divided the total amount of the forgiven debt by the investigated provinces' total sales during the POI. On this basis, we preliminarily determine the countervailable subsidy to be 0.01 percent *ad valorem*.

L. Ontario Livestock, Poultry, and Honeybee Protection Act

This program, which is administered by the Ontario Ministry of Agriculture, Food and Rural Affairs, provides compensation, inter alia, to livestock producers whose animals are injured or killed by wolves or coyotes. Producers apply for, and receive, compensation through the local municipal government. The Ontario Ministry of Agriculture, Food and Rural Affairs reimburses the municipality. Grants for damage to live cattle cannot exceed C$1,000 per head. Although the Ministry of Agriculture does not track the proportion of benefits under this program going to dairy cattle or beef cattle producers, the GOO has reported that beef cattle producers are believed to derive the majority of the benefits from the program.

A grant is a financial contribution as described in section 771(5)(D)(i) of the Act, which provides a benefit to recipients in the amount of the grant. Because this program is limited by law to livestock producers, poultry farmers, and beekeepers, we preliminarily determine that the program is specific under section 771(5A)(D)(i) of the Act. Therefore, we preliminarily determine that these grants are countervailable within the meaning of section 771(5) of the Act.

We treated the grants received as a recurring benefit because livestock producers can expect to receive the grants every year. To calculate the benefit, we divided the total amount of grants received by the investigated provinces' total sales of live cattle during the POI. On this basis, we determine the countervailable subsidy to be 0.01 percent ad valorem.

M. Ontario Rabies Indemnification Program

This program is administered by the Farm Assistance Branch of the Ontario Ministry of Agriculture, Food and Rural Affairs. It is designed to encourage farmers to report cases of rabies in livestock by compensating livestock producers for damage caused by rabies. Farmers may receive grants up to a maximum of C$1,000 per head of cattle under this program of which 60 percent is funded by the GOO and 40 percent by the GOC.

A grant is a financial contribution as described in section 771(5)(D)(i) of the Act which provides a benefit to recipients in the amount of the grant. Because the legislation administering this program expressly makes it available only to livestock producers, we preliminarily determine that the program is specific under section 771(5A)(D)(i) of the Act. Therefore, we preliminarily determine that these grants are countervailable within the meaning of section 771(5) of the Act.

We treated the grants received as a recurring benefit because farmers can expect to receive the grants every year. To calculate the benefit, we divided the total amount of grants received by the investigated provinces' total sales of live cattle during the POI. On this basis, we determine the countervailable subsidy to be less than 0.01 percent ad valorem.

N. Saskatchewan Livestock and Horticultural Facilities Incentives Program

The purpose of this program is to promote the diversification of the rural economy by encouraging investment in livestock and horticultural facilities. This program allows for an annual rebate of education and health taxes paid on building materials and stationary equipment used in livestock operations as well as greenhouses, and vegetable and raw fruit storage facilities.

A tax benefit is a financial contribution as described in section 771(5)(D)(ii) of the Act which provides a benefit to the recipient in the amount of the tax savings. Because the legislation administering this program expressly makes it available only to the livestock and horticulture industries, we preliminarily determine that the program is specific under section 771(5A)(D)(i) of the Act. Therefore, we preliminarily determine that this tax benefit is countervailable within the meaning of section 771(5) of the Act.

In calculating the benefit, we treated the tax savings as a recurring benefit and divided the tax savings received by the investigated provinces' total sales during the POI. On this basis, we preliminarily determine the countervailable subsidy to be less than 0.01 percent ad valorem.

II. Programs Preliminarily Determined To Be Not Countervailable

A. Canadian Wheat Board

The Canadian Wheat Board (''CWB'') has the exclusive authority to market Canadian wheat and barley in export markets and when sold for human consumption in Canada. The petitioner alleged that the CWB pooling system and its control over exports of feed barley send distorted market signals to Canadian farmers with the result that exports of feed barley are less than they otherwise would be and, consequently, that prices in Canada are artificially low. Although there is not an explicit export restriction as was the case in Certain Softwood Lumber Products from Canada, 57 FR 22570, 22605 (1992) (''Lumber'') and Leather from Argentina, 55 FR 40212 (1990) (''Leather''), in the petitioner's view, the CWB's actions have the same result as the export restrictions which the Department found countervailable in those cases.

The CWB operates four separate annual pool accounts for the four types of grains it markets. At the start of a pool year (August), the CWB issues initial prices that it will pay for the various grades and grains. Barley farmers look at that initial payment and the projected pool return and determine whether they want to sell their barley domestically or offer it to the CWB for export. The amount of barley offered to the CWB is solely the farmer's decision, although this decision could be influenced by the CWB's published initial price. The CWB accepted all

barley offered to it for export during the POI.

The petitioner has alleged that the CWB's actions have resulted in significant price differentials for feed barley in the Canadian and U.S. markets, and that the U.S. price reflects what the price would be in Canada but for the CWB's control of exports. In making our price comparisons, we reviewed the record evidence with respect to domestic prices of feed barley (specifically, grade Number 1 CW Feed) in Canada, the prices paid by the CWB to Canadian barley farmers, the prices received by the CWB for feed barley exported to the United States, and feed barley prices in the United States (U.S. Number 2 feed). To calculate a Canadian domestic price, we took a simple average of all Canadian ''Off-Board'' prices on the record for the four provinces under investigation (information is not currently on the record to calculate a weighted average price based upon barley production in each of the four provinces). The U.S. domestic price we examined is based on quotes from Great Falls, Montana (the only U.S. domestic price series currently on the record and the U.S. pricing point used in several economic studies of U.S. and Canadian feed barley prices cited or provided in the record). All prices were quoted at an elevator or feedlot and did not include any elevation or handling charges. Therefore, we did not make any adjustments to the reported prices. We observed that the price differential between the U.S. and Canadian markets was insignificant during the POI. In fact, the Canadian domestic price was actually higher in portions of the POI and after the POI. Therefore, we preliminarily determine that, assuming arguendo that the CWB controlled exports, it did not thereby provide a benefit to Canadian producers of live cattle during the POI.

Notwithstanding the above analysis, we note that the Canadian domestic feed barley market was especially strong during the POI. Because we do not have pricing data on previous years, we cannot determine whether the POI provides a reliable basis upon which to conduct our analysis. Therefore, prior to our final determination, we intend to seek more information on historical pricing in the Canadian domestic market, CWB export prices to the United States and U.S. domestic prices. Furthermore, we intend to do a more extensive analysis of how actions of the CWB may affect market prices in Canada. The fact that there was no significant differential between export and domestic prices in the POI does not necessarily support the conclusion that the actions of the CWB have not resulted in domestic feed barley prices being lower than they otherwise would be.

We note that in a submission dated April 29, 1999, the petitioner has objected to the use of export prices to the United States reported by the CWB. We have determined that these prices can be used for our preliminary determination, but we intend to verify these reported amounts and the underlying data, and may request more detailed data.

B. Net Income Stabilization Account

The Net Income Stabilization Account (''NISA'') is designed to stabilize an individual farm's overall financial performance through a voluntary savings plan. Participants enroll all eligible commodities grown on the farm. Farmers may then deposit a portion of their net sales of eligible NISA commodities (up to three percent of net eligible sales) into individual savings accounts, receive matching government deposits (matching funds come from both the federal and provincial governments), and make additional, non-matchable deposits (up to 20 percent of net sales).

NISA provides stabilization assistance on a ''whole farm'' basis. A producer can withdraw funds from a NISA account under a stabilization or minimum income trigger. The stabilization trigger permits withdrawal when the gross profit margin from the entire farming operation falls below an historical average, based on the previous five years. If poor market performance of some products is offset by increased revenues from others, no withdrawal is triggered. The minimum income trigger permits the producer to withdraw the amount by which income from the farm falls short of a specific minimum income level.

In Live Swine From Canada; Final Results of Changed Circumstances Countervailing Duty Administrative Review, and Partial Revocation, 61 FR 45402 (August 29, 1996), we found that NISA is not de jure specific. Moreover, for hog producers, we found that NISA was not de facto specific. Therefore, the issue in this investigation is whether NISA is de facto specific with respect to cattle producers.

To make our determination, we have examined whether cattle producers are dominant users of the program, or whether cattle producers receive disproportionately large benefits under the program. We found no evidence that cattle producers are dominant users or receive disproportionate benefits from the NISA program. Specifically, the GOC provided information on farmer withdrawals of NISA funds during the POI and the two preceding years. Because NISA does not collect or maintain information concerning withdrawals on a commodity-by-commodity basis, the GOC reported farmer withdrawals by categorizing farms by the source of the majority of their revenues. That is, a farm with over fifty percent of its revenues from cattle sales was classified as a cattle farm. On this basis the GOC reported that, during the POI, cattle farms accounted for 7.7 percent by value of total withdrawals from NISA.

The petitioner also raised a concern that NISA may be regionally specific because cattle in certain provinces are not covered under the program. However, we preliminarily determine that NISA is not limited to a particular region. While several provinces choose not to participate in NISA for particular commodities, the provinces and producers of the commodity do so at their own choice, not because the program is limited to an enterprise or industry located in a particular region.

Based on the above analysis, we preliminarily determine that NISA assistance is not limited to a specific enterprise or industry, or group of enterprises or industries. Therefore, we preliminarily determine that assistance received by cattle producers under the NISA program is not countervailable.

Prior to the initiation of our investigation, the GOC announced a government initiative to aid farmers over the coming years. Information on the proposed aid indicated that it may be administered by the same body that administers NISA. Therefore, when investigating NISA, we asked whether this new aid would constitute a change in the NISA program. The GOC responded that the new program, Agriculture Income Disaster Assistance, would be separate from NISA and NISA's administration. Therefore, because the program is unrelated to NISA and no funds were distributed in the POI, we are not able to make a determination as to whether aid provided through this program constitutes a countervailable subsidy.

C. Alberta Public Grazing Lands Improvement Program

Established in 1970 and terminated in 1995, this program provided a partial credit toward the payment of rent on a public grazing land disposition if the lessee undertook certain pre-approved capital range improvement projects. The leaseholder was required to pay for all the costs incurred for these capital

improvements, and was reimbursed for 25 to 50 percent of these costs through credits on the rental fees otherwise due annually. All improvements belong to the government and, once the improvements are created, the lessee is required to maintain them at his or her own expense.

In order for a financial contribution to exist under this program, the GOA must forego rental fees, or a portion thereof, that are otherwise due as described in section 771(5)(D)(ii) of the Act. However, in this case the reduction in the rental fees corresponds to range improvements on behalf of the government. Furthermore, the increased value of the land as a result of the improvements is captured upon the next setting of rental fees. Based on the above analysis, we preliminarily determine that this program does not provide a financial contribution and, therefore, we preliminarily determine that the program is not countervailable.

D. Saskatchewan Crown Land Improvement Policy

The Crown Land Improvement Policy is designed to provide rental adjustments when Crown land lease holders make capital improvements to the land, such as clearing, bush removal, or breaking and reseeding. In return for the lessee's funding of these improvements, Saskatchewan Agriculture and Food (''SAF'') agrees not to increase the rental rate for a certain period of time, depending on the length of the improvement project or may reduce the basis for rent. SAF is willing to reduce the rental rate or freeze the rate because during the improvement project the actual stocking rate of the land is lower than the potential, the improvements do not result in an immediate increase in the productive value of the land, and any improvements belong to the Crown.

In order for a financial contribution to exist under this program the GOS must forego rental fees, or a portion thereof, that are otherwise due as described in section 771(5)(D)(ii) of the Act. However, in this case the reduction in the rental fees corresponds to a reduction in the land's carrying capacity while improvements are undertaken. The increased value of the land as a result of the improvements is captured upon the next setting of rental fees. Based on the above analysis, we preliminarily determine that this program does not provide a financial contribution and, therefore, we preliminarily determine that the program is not countervailable.

Provision of Goods or Services

E. Alberta Grazing Reserve Program

Like the federal government's PFRA Community Pasture Program, Alberta developed community pastures (reserves) on which multiple ranchers' herds can graze. Traditionally, government employees supervised and managed the animals on the reserves and maintained and built range infrastructure. Grazing reserves also provided multiple-use opportunities to other users. As of April 1, 1999, the GOA no longer performs management activities on 32 of its 37 grazing reserves covering 897,920 acres of public land due to a privatization initiative. Under the privatization initiative, livestock management responsibilities were shifted to grazing associations and new negotiated fees have been established. However, during the POI, the government operated 20 reserves, accounting for 180,117 AUMs. The 17 remaining reserves were privately operated and accounted for 149,950 AUMs.

Priority in issuing permits for the public reserves is given to residents who operate a ranch or farm. The Minister of Lands and Forests establishes the amount to be paid for stock grazing on each pasture. The GOA reported that the grazing revenues obtained from this program exceed the cost of the grazing aspects of the program and cover many of the multiple-use functions of the land.

The provision of a good or service is a financial contribution as described in section 771(5)(D)(iii) of the Act. As discussed above in connection with the PFRA, a benefit is conferred in the provision of a good or service when the prices charged for government-provided goods or services are less than the prices charged by private suppliers. In the case of the Alberta Grazing Reserve Program, we preliminarily determine that the government is charging more than the private providers of the same services. Specifically, the fees charged by the private grazing associations to its members were lower than those charged by the government. Based on the above, we preliminarily determine that the government is receiving adequate remuneration for its provision of grazing services and, thus, no countervailable subsidy exists.

On a final note, the questionnaire response provided information on the costs faced by the private grazing associations. One element of these costs is a fee paid to the government for use of the land. We have examined whether this fee is in accordance with prevailing market conditions for grazing leases in Alberta. We preliminarily find that this fee is comparable to the adjusted private grazing lease price as discussed in the Alberta Crown Lands Basic Grazing Program, above. Therefore, we preliminarily determine that the government is being adequately remunerated for its provision of grazing land to grazing associations and, thus, no countervailable subsidy exists.

F. Saskatchewan Crown Lands Program

Agricultural Crown land is managed by Saskatchewan Agriculture and Food and is made available to all Saskatchewan agricultural producers for lease. Activities carried out on the land include: grazing, cultivation, community pastures, petroleum and gas leases, and sand, gravel, and quarry leases. Leases for grazing dispositions range from one to 33 year terms. As of 1997, SAF sets rental rates using a formula which takes account of the average price of cattle marketed over a period in the previous year, the average pounds of beef produced from one AUM, the AUM productivity rating of the land in question, reduced stocking expectations, and a fair return for the use of the land and resources. Lessees are responsible for paying taxes, developing and maintaining water facilities and fences, and providing for public access to the land.

The provision of a good or service is a financial contribution as described in section 771(5)(D)(iii) of the Act. As discussed above in connection with the PFRA, a benefit is conferred in the provision of a good or service when the prices charged for government-provided goods or services are less than the prices charged by private suppliers. In the case of the Saskatchewan Crown Lands Grazing Program, a simple comparison of the fees charged would not be appropriate because the grazing rights being offered by the GOS differ from those offered by private suppliers. In this regard, the GOS has provided certain quantifiable adjustments. Specifically, we adjusted the private price downward by deducting costs for the construction and maintenance of fences and water improvements, and the cost of paying property taxes. Although the GOS argued that there were other differences that should be taken into account for such things as multiple-use requirements, we have not considered making adjustments for such costs because the GOS was unable to quantify them. Comparing the public grazing lease to the adjusted private lease price, we preliminarily determine that the price for private leases is lower than the price for a public grazing lease. Therefore, we preliminarily determine

that the government is adequately remunerated for its provision of grazing land and, thus, no countervailable subsidy exists.

G. Manitoba Tripartite Cattle Stabilization Program/Industry Development Transition Fund

The petitioner alleged that when the Manitoba Tripartite Cattle Stabilization Plan was terminated, the cow/calf and feeder cattle plans had surplus funds which allegedly resulted in premium refunds to producers.

In its response, the GOC stated that the producer refunds came solely from producer contributions and did not include government money. Moreover, the refund occurred in 1994, prior to the three-year AUL. Therefore, we preliminarily determine that producers did not receive a countervailable benefit during the POI.

With respect to the second part of this allegation, the Industry Development Transition Fund, the correct name for this program is the Beef Industry Development Fund and the Department declined to initiate on this program. *See* Notice of Initiation at 63 FR 71889, 71891.

Green Box Programs

The GOC has requested ''green box'' treatment for three programs which we are examining in this investigation: the Canada-Alberta Beef Industry Development Fund (''CABIDF''), the Feed Freight Assistance Adjustment Fund (''FFAF''), and the Saskatchewan Beef Development Fund (''SBDF''). Under section 771(5B)(F) of the Act, domestic support measures provided with respect to the agricultural products listed in Annex 1 to the 1994 WTO Agreement on Agriculture shall be treated as noncountervailable if the Department determines that the measures conform fully with the provisions of Annex 2 of that same Agreement. The GOC claimed that these programs meet these criteria and, therefore, funding for each program should be noncountervailable pursuant to section 771(5B)(F) of the Act. The claims made relating to CABIDF and SBDF are discussed in more detail below. Because the FFAF was not used during the POI, we do not reach the issue of green box treatment for FFAF. *See* the *Programs Preliminarily Determined To Be Not Used* section, below.

H. Canada-Alberta Beef Industry Development Fund

This fund, which was established by the GOC and the GOA in April 1997, supports research, development, and related activities connected to the beef industry in Alberta. It is administered by the Alberta Department of Agriculture, Food, and Rural Development and run by the Alberta Cattle Commission and the Alberta Agricultural Research Institute. Applicants first submit a pre-proposal application, which is evaluated by the Beef Industry Development Committee (''BIDC''), a panel consisting of five voting industry representatives and two non-voting government advisors. Projects are evaluated on the basis of the project's relationship to the Funds's research priorities, its scientific merits, and the usefulness of the project results to the beef industry, directly or indirectly. The Fund's research priorities include projects that will improve regional beef production efficiencies, enhance the ability to sustain beef production in Alberta, and increase the intellectual resources available to Alberta beef producers at educational institutions. Applicants for projects chosen by the Committee are then asked to submit a more detailed proposal, which is evaluated for technical merit by a scientific committee consisting of industry experts and scientists. The scientific committee makes its recommendations to the BIDC which, in turn, further evaluates the proposals based on the objectives listed above and either approves or rejects the proposal.

In order to determine whether CABIDF qualifies for green box treatment under section 771(5B)(F) of the Act, we examined whether CABIDF met the criteria specified in the Act and further detailed in the Department's regulations. A more detailed discussion of the Department's analysis of this issue can be found in the Department's Memorandum to Richard Moreland: ''Green Box Claims Made by the Government of Canada,'' dated May 3, 1999, which is on file in the Central Records Unit.

According to the Act and the Department's regulations, we will treat as noncountervailable domestic support measures relating to agricultural products that conform to the criteria of Annex 2 of the WTO Agriculture Agreement. The Department's regulations further state that we will determine that a particular domestic support measure conforms fully to the green box criteria in the Agreement if we find that the measure (1) is provided through a publicly-funded program (including government revenue forgone) not involving transfers from consumers; (2) does not have the effect of providing price support to producers; and (3) meets the relevant policy-specific criteria and conditions laid out in Annex 2 of the Agreement.

With regard to the first criterion, the GOC has stated that the program in question meets the requirement set forth. In the original and supplemental questionnaire responses, the GOC showed that all monies used to fund this program came directly from the government, whether on a provincial or on a federal level. Although the program's authorizing legislation allows for contributions to the Fund to come from producers, producer organizations, or other parties, the GOC reconfirmed with the Department that no funds were received from any entity other than federal and provincial governments during the POI. Those funds went directly to CABIDF applicants. No transfers from consumers were involved.

As for the second criterion, according to the questionnaire response, none of the projects that have been approved by CABIDF have the effect of providing price support to producers.

Finally, with regard to the last criterion, the policy-specific criteria that must be met are those which are listed under paragraph 2, Annex 2 of the Agriculture Agreement, which focuses on policies which involve expenditures in relation to programs which provide services or benefits to the agriculture or rural community. This includes sub-paragraph (a), which covers projects for research, including general research, research in connection with environmental programs, and research programs relating to particular products. According to its authorizing statute, the purpose of CABIDF is to ''provide financial contributions in the form of grants to enhance research and industry development activities with the objective of promoting and enhancing the competitiveness of the beef industry in Alberta.'' Twenty-nine projects have been approved for CABIDF funds since the program's creation in April 1997. Although the program's legislation allows for approval of other types of projects covered under paragraph 2 (i.e., marketing and promotion, extension and advisory services, and training), the projects that have been approved by CABIDF to date have been related to scientific research activities relating to the beef industry and the agriculture industry in general. All of the approved projects have consisted of grants, not revenue forgone, and none have been paid directly to producers or processors.

Based on the above analysis, we preliminarily find that CABIDF is eligible for green box treatment under section 771(5B)(F) of the Act, and, thus, is not countervailable. However, if an

order is issued, and an administrative review requested, and any of these facts are different, we will re-examine the green box status of this program.

I. Saskatchewan Beef Development Fund

SBDF, which is administered by the Agriculture Research Branch of the Saskatchewan Ministry of Agriculture and Food, supports the development and diversification of Saskatchewan's beef industry through the funding of various projects related to production research, technology transfer, and development and promotion of new products. The ministry-appointed, producer-run governing board, the Saskatchewan Beef Development Board, meets once a year to review and approve project proposals that it deems to be of general benefit to the cattle and beef industries. Priority is given to public research institutions conducting research, development, and promotion activities that will be generally available to the industry.

As was mentioned above, the GOC has requested green box treatment for this program. In order to determine whether SBDF qualifies for green box treatment under section 771(5B)(F) of the Act, we examined whether the SBDF met the criteria specified in the Act and further laid out in the Department's regulations. A more detailed discussion of the Department's analysis of this issue can be found in the Department's Memorandum to Richard Moreland: ''Green Box Claims Made by the Government of Canada,'' dated May 3, 1999, which is on file in the Central Records Unit.

As noted above, we will treat as noncountervailable domestic support measures relating to certain agricultural products that conform to the criteria of Annex 2 of the WTO Agriculture Agreement. Under the Department's regulations, a particular domestic support measure conforms fully to the green box criteria in the Agreement if we find that the measure (1) is provided through a publicly-funded program (including government revenue forgone) not involving transfers from consumers; (2) does not have the effect of providing price support to producers; and (3) meets the relevant policy-specific criteria and conditions laid out in Annex 2 of the Agreement.

With regard to the first criterion, the GOC has stated that this program meets the necessary requirements. In the original and supplemental questionnaire responses, the GOC indicated that all monies used to fund this program came directly from the government, whether on a provincial or on a federal level. Those funds went directly to SBDF applicants. No transfers from consumers were involved.

As for the second criterion, according to the questionnaire responses, none of the projects that have been approved by SBDF have the effect of providing price support to producers.

Finally, with regard to the last criterion, the policy-specific criteria that must be met are those which are listed under paragraph 2, Annex 2 of the Agriculture Agreement. This includes the criteria set forth in sub-paragraphs (a), (c), (d), and (f) of paragraph 2, which focus on programs relating to research, training services, extension and advisory services, and marketing and promotion services. The regulations governing SBDF state that the purpose of the fund is to provide for the enhancement of the Saskatchewan beef and beef cattle industry through research, development, and promotional activities that the board considers to be in the best interests of the industry. The vast majority of projects that have been approved by SBDF to date have been related to scientific research activities relating to the beef industry and the agriculture industry in general. Programs related to training services, marketing and promotion service, and extension and advisory services were also considered and approved. All of these approved projects have consisted of grants, not revenue forgone, and none have been paid directly to producers or processors.

Based on the above analysis, we preliminarily find that SBDF is eligible for green box treatment under section 771(5B)(F) of the Act and, thus, is not countervailable. However, if an order is issued, and an administrative review requested, and any of these facts are different, we will re-examine the green box status of this program.

III. Programs Preliminarily Determined To Be Not Used

Based upon the information provided in the responses, we determine that the producers of the subject merchandise under investigation did not apply for or receive benefits under the following programs during the POI.

A. Feed Freight Assistance Adjustment Fund

Of the four responding provinces in this investigation, only one, Ontario, participated in the Feed Freight Assistance Adjustment Fund program. Specifically, in the year prior to the POI, the first year of the FFAF, a grant was provided to Ontario producers. However, because the benefit was below 0.50 percent of the investigated provinces' total sales, we expensed this grant in the year received. Thus, cattle producers received no benefit during the POI from grants received prior to the POI. During the POI, the respondents reported that Ontario did not receive benefits under FFAF. Therefore, we preliminarily determine that the FFAF program was not used during the POI.

B. Canadian Adaptation and Rural Development (CARDS) Program in Saskatchewan

C. Western Diversification Program

IV. Programs Preliminarily Determined To Be Terminated

A. Ontario Export Sales Aid Program

V. Other Programs Reviewed

The GOC demonstrated that, for the following programs, any benefit to the subject merchandise would be so small that there would be no impact on the overall subsidy rate, regardless of a determination of countervailability. In light of this, we do not consider it necessary to determine whether benefits conferred under these programs to the subject merchandise are countervailable.

A. Ontario Bear Damage to Livestock Compensation Program

B. Ontario Livestock Programs for Purebred Dairy Cattle, Beef, and Sheep Sales Assistance Policy/Swine Assistance Policy

C. Ontario Artificial Insemination of Livestock Act

Verification

In accordance with section 782(i) of the Act, we will verify the information submitted by the respondent prior to making our final determination.

Summary

The total estimated preliminary net countervailable subsidy rate for all producers or exporters of live cattle in Canada is 0.38 percent ad valorem, which is de minimis. Therefore, we preliminarily determine that countervailable subsidies are not being provided to producers, or exporters of live cattle in Canada.

ITC Notification

In accordance with section 703(f) of the Act, we will notify the ITC of our determination. In addition, we are making available to the ITC all nonprivileged and nonproprietary information relating to this investigation. We will allow the ITC access to all privileged and business proprietary information in our files, provided the ITC confirms that it will

not disclose such information, either publicly or under an administrative protective order, without the written consent of the Assistant Secretary, Import Administration.

If our final determination is affirmative, the ITC will make its final determination within 75 days after the Department makes its final determination.

Public Comment

In accordance with 19 CFR 351.310, we will hold a public hearing, if requested, to afford interested parties an opportunity to comment on this preliminary determination. The hearing is tentatively scheduled to be held 62 days from the date of publication of this notice in the **Federal Register** at the U.S. Department of Commerce, 14th Street and Constitution Avenue, N.W., Washington, D.C. 20230. Individuals who wish to request a hearing must submit a written request within 30 days of the publication of this notice in the **Federal Register** to the Assistant Secretary for Import Administration, U.S. Department of Commerce, Room 1870, 14th Street and Constitution Avenue, N.W., Washington, DC 20230. Parties should confirm by telephone the time, date, and place of the hearing 48 hours before the scheduled time.

Requests for a public hearing should contain: (1) The party's name, address, and telephone number; (2) the number of participants; and, (3) to the extent practicable, an identification of the arguments to be raised at the hearing. In addition, six copies of the business proprietary version and six copies of the nonproprietary version of the case briefs must be submitted to the Assistant Secretary no later than 50 days from the date of publication of the preliminary determination. As part of the case brief, parties are encouraged to provide a summary of the arguments not to exceed five pages and a table of statutes, regulations, and cases cited. Six copies of the business proprietary version and six copies of the nonproprietary version of the rebuttal briefs must be submitted to the Assistant Secretary no later than 55 days from the date of publication of the preliminary determination. An interested party may make a hearing presentation only on arguments included in that party's case or rebuttal briefs. Written arguments should be submitted in accordance with 19 CFR 351.309 and will be considered if received within the time limits specified above.

This determination is published pursuant to sections 703(f) and 777(i) of the Act.

Dated: May 3, 1999.

Robert LaRussa,

Assistant Secretary for Import Administration

[FR Doc. 99–11887 Filed 5–10–99; 8:45 am]

BILLING CODE 3510–DS–P

DEPARTMENT OF COMMERCE

INTERNATIONAL TRADE ADMINISTRATION

[C–423–809 (Belgium), C–475–823 (Italy), C–791–806 (South Africa)]

Notice of Amended Final Determinations: Stainless Steel Plate in Coils from Belgium and South Africa; and Notice of Countervailing Duty Orders: Stainless Steel Plate in Coils from Belgium, Italy and South Africa

AGENCY: Import Administration, International Trade Administration, Department of Commerce.

EFFECTIVE DATE: May 11, 1999.

FOR FURTHER INFORMATION CONTACT: Zak Smith (Belgium), Cynthia Thirumalai (Italy) or Dana Mermelstein (South Africa), Office of AD/CVD Enforcement, Import Administration, International Trade Administration, U.S. Department of Commerce, 14th Street and Constitution Avenue, NW, Washington, DC 20230; telephone: (202) 482–0189, (202) 482–4087 and (202) 482–0984, respectively.

The Applicable Statute and Regulations

Unless otherwise indicated, all citations to the statute are references to the provisions of the Tariff Act of 1930, as amended by the Uruguay Round Agreements Act effective January 1, 1995 (the Act). In addition, unless otherwise indicated, all citations to the Department's regulations are to the current regulations codified at 19 CFR part 351 (April 1998).

Scope of Orders

The product covered by these orders is certain stainless steel plate in coils. Stainless steel is an alloy steel containing, by weight, 1.2 percent or less of carbon and 10.5 percent or more of chromium, with or without other elements. The subject plate products are flat-rolled products, 254 mm or over in width and 4.75 mm or more in thickness, in coils, and annealed or otherwise heat treated and pickled or otherwise descaled. The subject plate may also be further processed (*e.g.*, cold-rolled, polished, *etc.*) provided that it maintains the specified dimensions of plate following such processing. Excluded from the scope of these orders are the following: (1) Plate not in coils, (2) plate that is not annealed or otherwise heat treated and pickled or otherwise descaled, (3) sheet and strip, and (4) flat bars. In addition, certain cold-rolled stainless steel plate in coils is also excluded from the scope of these orders. The excluded cold-rolled stainless steel plate in coils is defined as that merchandise which meets the physical characteristics described above that has undergone a cold-reduction process that reduced the thickness of the steel by 25 percent or more, and has been annealed and pickled after this cold reduction process.

The merchandise subject to these orders is currently classifiable in the Harmonized Tariff Schedule of the United States (HTSUS) at subheadings: 7219.11.00.30, 7219.11.00.60, 7219.12.00.05, 7219.12.00.20, 7219.12.00.25, 7219.12.00.50, 7219.12.00.55, 7219.12.00.65, 7219.12.00.70, 7219.12.00.80, 7219.31.00.10, 7219.90.00.10, 7219.90.00.20, 7219.90.00.25, 7219.90.00.60, 7219.90.00.80, 7220.11.00.00, 7220.20.10.10, 7220.20.10.15, 7220.20.10.60, 7220.20.10.80, 7220.20.60.05, 7220.20.60.10, 7220.20.60.15, 7220.20.60.60, 7220.20.60.80, 7220.90.00.10, 7220.90.00.15, 7220.90.00.60, and 7220.90.00.80. Although the HTSUS subheadings are provided for convenience and customs purposes, the written description of the scope of the orders is dispositive.

Amended Final Determinations

Belgium

In accordance with section 705(d) of the Act, on March 31, 1999, the Department published its final determination in the countervailing duty investigation of stainless steel plate in coils from Belgium (64 FR 15567) (*Belgium Final*). Subsequently, on April 5, 1999, the petitioners submitted ministerial-error allegations.

The petitioners allege that the Department neglected to include all relevant years in its net present value calculation when calculating the benefit from the loan provided to Alfin, pursuant to the Industrial Reconversion Zone program. Furthermore, the petitioners allege that, when allocating the benefit from this loan, the Department did not use the proper discount rate. The respondent did not object to the petitioners' allegations. We agree with the petitioners on both counts and have made the necessary adjustments. On this basis, we determine the countervailable subsidy rate for this program to be 0.18 percent ad valorem.

South Africa

In accordance with section 705(d) of the Act, on March 31, 1999, the Department published its final determination in the countervailing duty investigation of stainless steel plate in coils from South Africa (64 FR 15553) (*South Africa Final*). Subsequently, on March 29, 1999, Columbus Stainless, the operating division of the Columbus Joint Venture (Columbus), and the petitioners alleged that the Department had made ministerial errors in calculating the estimated net countervailable subsidy rate. We disagree with Columbus that we made a ministerial error; Columbus' allegation constituted an argument for a methodological change. We agree with the petitioners that we made a ministerial error, and therefore we have made a correction in the calculations. This correction resulted in the estimated net countervailable subsidy rate attributable to the Section 37E program increasing from 3.84 percent ad valorem to 3.86 percent ad valorem. The ministerial-error allegations and the Department's analysis are detailed in an April 30, 1999, Memorandum to Bernard Carreau, Deputy Assistant Secretary for AD/CVD Enforcement II, from David Mueller, Director, Office CVD/AD Enforcement VI, RE: ''Ministerial Error Allegations filed by Columbus Stainless and Petitioners in the Final Determination of the Countervailing Duty Investigation of *Certain Stainless Steel Wire Rod [sic] from South Africa,* a public version of which is on file in the Central Records Unit (Room B–099 of the Main Commerce Building). Thus, the total estimated net countervailable subsidy rate is 3.95 percent ad valorem for Columbus. This rate also serves as the ''all others'' rate. *See South Africa Final,* 64 FR at 15566.

Countervailing Duty Orders

In accordance with section 705(d) of the Act, on March 31, 1999, the Department published its final determinations in the countervailing duty investigations of certain stainless steel plate in coils from Belgium (64 FR 15567), Italy (64 FR 15508) and South Africa (64 FR 15553). On May 3, 1999, in accordance with section 705(d) of the Act, the International Trade Commission (ITC) notified the Department of its final determination, pursuant to section 705(b)(1)(A)(i) of the Act, that an industry in the United States suffered material injury as a result of subsidized imports of stainless steel plate in coils from Belgium, Italy and South Africa. In its final determination, however, the ITC determined that two domestic like products exist for the merchandise covered by the Department's investigation: i) certain cold-rolled stainless steel plate in coils, as defined above, and ii) all other stainless steel plate in coils. The ITC determined pursuant to section 735(b)(1) that a domestic industry in the United States is not materially injured or threatened with material injury by reason of imports of certain cold-rolled stainless steel plate from Belgium and that imports of certain cold-rolled stainless steel plate in coils from Italy and South Africa were ''negligible.'' Therefore, the ITC's affirmative determination of material injury covered all stainless steel plate in coils other than that specifically excluded under the ''Scope of the Orders'' section above. Accordingly, the scope of the countervailing duty orders has been amended as described above to reflect the ITC's distinction between cold-rolled and all other stainless steel plate in coils.

Therefore, countervailing duties will be assessed on all unliquidated entries of stainless steel plate in coils from Belgium, Italy and South Africa entered, or withdrawn from warehouse, for consumption on or after September 9, 1998, the date on which the Department published its preliminary countervailing duty determinations in the **Federal Register**, and before January 2, 1999, the date the Department instructed the U.S. Customs Service to terminate the suspensions of liquidation in accordance with section 703(d) of the Act, and on all entries and withdrawals on or after the date of publication of these countervailing duty orders in the **Federal Register**. Section 703(d) states that the suspension of liquidation pursuant to a preliminary determination may not remain in effect for more than four months. Entries of stainless steel plate in coils made on or after January 2, 1999, and prior to the date of publication of these orders in the **Federal Register** are not liable for the assessment of countervailing duties due to the Department's termination, effective January 2, 1999, of the suspensions of liquidation.

In accordance with section 706 of the Act, the Department will direct U.S. Customs officers to reinstitute the suspensions of liquidation and to assess, upon further advice by the Department pursuant to section 706(a)(1) of the Act, countervailing duties for each entry of the subject merchandise in an amount based on the net countervailable subsidy rate for the subject merchandise.

On or after the date of publication of this notice in the **Federal Register**, U.S. Customs officers must require, at the same time as importers would normally deposit estimated duties on this merchandise, a cash deposit equal to the countervailable subsidy rates noted below. The All Others rates apply to all producers and exporters of stainless steel plate in coils from Belgium, Italy and South Africa not specifically listed below. The cash deposit rates are as follows:

AD VALOREM RATES

Producer/exporter	Net subsidy rate
Belgium:	
ALZ	2.00 percent.
All Others	2.00 percent.
ItalyNet	
Acciai Speciali Terni	15.16 percent.
All Others	15.16 percent.
South Africa:	
Columbus Stainless (the operating division of the Columbus Joint Venture).	3.95 percent.
All Others	3.95 percent.

This notice constitutes the countervailing duty orders with respect to stainless steel plate in coils from Belgium, Italy and South Africa, pursuant to section 706(a) of the Act. Interested parties may contact the Central Records Unit, Room B–099 of the Main Commerce Building, for copies of an updated list of countervailing duty orders currently in effect.

These countervailing duty orders and amended finals are published in accordance with section 706(a) and 705 of the Act and 19 CFR 351.211 and 351.224.

Dated: May 5, 1999.

Robert S. LaRussa

Assistant Secretary for Import Administration.

[FR Doc. 99–11888 Filed 5–10–99; 8:45 am]

BILLING CODE 3510–DS–P

DEPARTMENT OF COMMERCE

National Oceanic and Atmospheric Administration

[Docket No. 990408090–9090–01; I.D. 022399C]

RIN 0648–ZA63

Halibut and Sablefish Fisheries Quota-Share Loan Program; Final Program Notice and Announcement of Availability of Federal Financial Assistance

AGENCY: National Marine Fisheries Service (NMFS), National Oceanic and

Atmospheric Administration, Department of Commerce.

ACTION: Announcement of availability of Federal financial assistance and request for public comment concerning future credit authority.

SUMMARY: NMFS announces the availability of long-term loans for financing or refinancing the purchase cost of quota share (QS) in the halibut and sablefish fisheries off Alaska. Only entry-level fishermen or fishermen who fish from small vessels are eligible for these loans.

DATES: NMFS will accept for processing only applications submitted, by first-class U.S. mail, during an application open season that begins May 25, 1999, through June 8, 1999, (precludes applications submitted either before May 25, 1999, or after June 8, 1999. All loan funds available for FY 1999 must be obligated before September 30, 1999. Comments must be received by June 8, 1999.

ADDRESSES: Applicants should send loan applications to the Northwest Financial Services Branch, National Marine Fisheries Service, National Oceanic and Atmospheric Administration, U.S. Department of Commerce, 7600 Sand Point Way, NE (BIN C15700), Building No. 1, Seattle, WA 98115. Comments should be sent to Michael L. Grable, Chief, Financial Services Division, NMFS, 1315 East-West Highway, Silver Spring, MD 20910.

In addition, the application will be available to down load from the NMFS Home Page in the near future. It can be accessed through Adobe Acrobat Reader and will be located at:

www.nmfs.gov/sfa.

FOR FURTHER INFORMATION CONTACT: Kimberly Ott at

(206) 526–6122 (voice) or (206) 526–6306 (facsimile) or kimberly.ott@noaa.gov (e-mail).

SUPPLEMENTARY INFORMATION:

I. Introduction

A. Background

The Sustainable Fisheries Act (SFA) (Pub.L. 104–297) amended section 1104A(a)(7) of Title XI of the Merchant Marine Act (46 U.S.C. App. 1274) and section 303(d)(4) of the Magnuson-Stevens Fishery Conservation and Management Act (Magnuson-Stevens Act) (16 U.S.C. 1801 *et seq.*) to authorize financing and refinancing the cost of loans available to entry-level fishermen and to fishermen who fish from small boats purchasing individual fishing quota (IFQ).

Although the SFA indicates that loans are available for purchasing IFQ, the basic fishing permit for the halibut and sablefish fisheries is termed ''QS'' rather than ''IFQ.'' In these fisheries, IFQ is an annual allocation of the pounds of fish that each QS holder may harvest. Consequently, NMFS interprets the SFA to allow loans for the cost of purchasing basic fishing permits rather than annual harvest allocations under those permits. These loans will finance the purchase of halibut and sablefish QS rather than IFQ.

Title XI of the Merchant Marine Act of 1936 (Act) is the credit authority under which NMFS will make these loans. This authority is subject to the Federal Credit Reform Act of 1990 (FCRA) (2 U.S.C. 661). This Act requires estimated net loan losses (FCRA cost) to be appropriated in cash at the time Congress authorizes annual loan ceilings.

Fiscal year (FY) 1999 appropriation for the U.S. Department of Commerce included a $100,000 advance to fund the FCRA cost of this loan program during its second year (October 1, 1998, through September 30, 1999).

The amount of annual FCRA credit authority available is a ratio of the FCRA cost rate and the FCRA cost appropriated. NMFS preliminarily estimates the FCRA cost rate of these loans to be 2 percent. Consequently, the loan cost of $100,000 appropriated for this FY 1999 FCRA will preliminarily support a $5,000,000 credit authority ($5,000,000 times 0.02 equals $100,000).

This credit authority may be enough to fund only about 40 to 50 loans. FY 1999 loan demand will, consequently, most likely exceed loan supply. For the credit authority available during FY 1999, NMFS will not accept FY 1999 applications submitted either before May 25, 1999, or after June 8, 1999.

FY 1998 applicants whose applications were not processed during FY 1998 do not have to reapply during FY 1999. NMFS will automatically treat these applications as if they had been resubmitted during the FY 1999 application open season (but they will be subject to the random selection of all applications). NMFS will, one week before the FY 1999 open season begins, send a confirmation of this to each FY 1998 applicant involved.

NMFS will, at least one week before the FY 1999 open season begins, send a new application form to everyone who (according to the NMFS database) has, since the FY 1998 open season ended, indicated an interest in applying for a loan.

All applications that are not selected for processing during FY 1999 will be held for processing during any subsequent year in which credit authority is available. Applications submitted during the FY 1999 open season (including the FY 1998 applications considered as constructively submitted during the FY 1999 open season) will then have the same priority that NMFS assigned to them during FY 1999. The status of all applications may be effected by policy changes published in subsequent notices.

All applications must be submitted by first-class U.S. mail. No other form of application submission is acceptable (including personal delivery, facsimile delivery, every form of express delivery, every other form of delivery other than U.S. mail, and every form of U.S. mail delivery other than first-class U.S. mail).

To reduce the open-season paperwork burden, applicants need complete only a small portion (Section A) of the application form at the time of initial application. Once an application's priority allows it to be processed, NMFS will request the applicant to complete the rest of the application.

These loans will, until further notice, continue to be available in any year for which adequate FCRA credit authority exists.

SFA amendments to sections 303(d)(4) and 304(d)(2) of the Magnuson-Stevens Act authorize the FCRA cost of IFQ lending to be funded up to 25 percent of the IFQ and Community Development Quota fee revenue from the IFQ fishery involved. Presumably, a portion of halibut and sablefish fees from this revenue source will, in the future, fund the annual FCRA cost of these loans for purchasing halibut and sablefish QS.

NMFS requests public comments during the open season concerning NMFS' plan for using future credit authority. In FY 1998 and FY 1999, the processing priority of applications was, or will be, determined by random selection from a pool of applicants who applied during the open seasons. NMFS plans to retain the pool of applicants who were not selected for processing in FY 1998 and FY 1999 in the randomly selected processing priority determined at the end of the FY 1999 open season and will draw exclusively from those applicants until the waiting list of applicants is exhausted. NMFS will accept, for credit authority available during years after FY 1999, applications submitted at any time after June 8, 1999. Applications submitted after June 8, 1999, will be retained in date order for processing following those applications received during the FY 1998 and FY 1999 open seasons. NMFS does not,

after the FY 1999 open season ends, intend to have further open seasons for this type of loan application in this fishery.

B. Catalog of Federal Domestic Assistance

The Halibut and Sablefish Quota-Share Loan Program is part of the program listed in the ''Catalog of Federal Domestic Assistance'' under number 11.415: *Fisheries Finance Program*.

II. Definitions

Applicant means either an entry-level fisherman who applies for a loan or a fisherman who fishes from a small vessel who applies for a loan.

Application means a submission for a loan from an applicant.

Application form means NOAA Form 88–1 (bearing Office of Management and Budget (OMB) approval No. 0648–0012 and expiring on January 31, 2002).

Base year means the year in which an applicant applies for a loan and the loan is accepted for processing.

Entry-level fisherman means a fisherman who:

(1) Does not own any QS;

(2) Applies for a loan to purchase QS that involves an IFQ total not greater than 8,000 lb (3,628.7 kg) during the base year; and

(3) Will be a crew member aboard the vessel that harvests the IFQ for the loan QS.

Fisherman who fishes from a small vessel means a fisherman:

(1) Who applies for a loan to purchase halibut or sablefish QS previously assigned under § 676.20(c)(2), sablefish QS previously assigned under § 676.20(c)(3), halibut QS previously assigned under § 676.20(c)(4), and/or halibut QS previously assigned under § 676.20(c)(5);

(2) Whose aggregate ownership of QS (including the loan QS) will involve an IFQ not greater than 50,000 lb (22,679.6 kg) during the base year;

(3) Who will be a crew member aboard the vessel that harvests the IFQ for the aggregate QS such fisherman owns (including the loan QS) at the time the loan QS transfers to such fisherman;

(4) Who has, for at least a total of 150 days at any point in the past, been a crewman aboard any vessel in any U.S. commercial fishery; and

(5) Who does not own, in whole or in part, any vessel of the type involved in the previous assignment of halibut or sablefish QS under § 676.20(c)(1) or (c)(2).

Halibut/sablefish means halibut, sablefish, or halibut and sablefish from the QS fishery off Alaska for halibut and/or the QS fishery off Alaska for sablefish.

IFQ means the annual catch limit of halibut/sablefish that may be harvested by a person who is lawfully allocated a harvest privilege for a specific portion of the total allowable catch of halibut/sablefish.

Loan means a program loan for financing or refinancing the cost of purchasing halibut/sablefish QS.

Loan QS means the QS purchased with the proceeds of a loan.

NMFS means the National Marine Fisheries Service, National Oceanic and Atmospheric Administration, U.S. Department of Commerce.

Notice date means the date this document is published in the **Federal Register**.

NWFSB means the Northwest Financial Services Branch (F/SF23), Northwest Regional Office of the National Marine Fisheries Service, see **ADDRESSES**.

Open season means the period beginning and ending on the dates specified under the DATES heading at the beginning of this document.

Program means the halibut/sablefish loan program described in this document.

QS means a halibut/sablefish permit, the face amount of which is used as a basis for the annual calculation of a person's IFQ.

RAM Program means the Restricted Access Management activities in the Alaska Regional Office of the National Marine Fisheries Service.

Section 676.20(c) means § 676.20(c) of Title 50, Code of Federal Regulations (revised as of October 1, 1995).

Title XI means Title XI of the Merchant Marine Act, 1936 (the statutory credit authority under which lending the purchase cost of IFQ is but one of the eligible fisheries loan purposes).

III. Eligible Applicants

Any entry-level fisherman or fisherman who fishes from a small vessel and is a U.S. citizen is eligible to apply for a loan.

IV. Loan Purpose

(1) *General*. The loan purpose is financing or refinancing the cost of purchasing QS.

(2) *Fishermen who fish from small vessels*. The loan QS must be halibut or sablefish QS previously assigned under

§ 676.20(c)(2), sablefish QS previously assigned under

§ 676.20(c)(3), halibut QS previously assigned under

§ 676.20(c)(4), and/or halibut QS previously assigned under

§ 676.20(c)(5). Applicants must be eligible to receive (hold) the loan QS. The amount of QS any applicant will own at the time the loan QS transfers to the applicant may not have involved an aggregate IFQ greater than 50,000 lb (22,679.6 kg) during the base year. The IFQ for such QS during any year other than the base year is irrelevant.

If, for example, an applicant who owns QS that involved a 20,000–lb (9,071.8–kg) IFQ during the base year wants a loan to finance the purchase of additional QS, the loan QS may not have involved more than an additional 30,000–lb (13,607.8–kg) IFQ during the base year.

Applicants may not own, in whole or in part, any vessel of the type involved in the previous assignment of halibut or sablefish QS under § 676.20(c)(1) or (c)(2).

Although CFR part 676 is not the CFR part that presently regulates halibut/sablefish, § 676.20(c) is the section that the SFA requires NMFS to use for the matters involved in this document. NWFSB can provide applicants copies of § 676.20(c) and explain how this section controls the loan QS.

Each applicant must be a crewman aboard the vessel that will harvest the total IFQ for all QS that the applicant owns at the time the loan QS transfers to applicant.

(3) *Entry-level fishermen*. The loan QS may be of any type for which the RAM Program will issue a QS certificate in the purchaser's name. The loan QS may not have involved an IFQ greater than 8,000 lb (3,628.7 kg) during the base year. The IFQ for such QS during any year other than the base year is irrelevant.

(4) *Applicants' indirect QS or vessel ownership interests*. NMFS will count against the poundage ceilings in paragraphs IV(2) and (3) of this document of whatever portion of QS interests and of the base-year IFQ applicants indirectly own by virtue of owning corporations, partnerships, or other forms of business organizations that directly own QS. For example, if an applicant owns one-third of the stock in a corporation that owns QS with a base-year IFQ of 30,000–lb (13,607.8–kg), NMFS will, for the purposes of the ceilings, regard the applicant as also owning QS with a base-year IFQ of 10,000 lb (4,535.9 kg).

NMFS will also, for the purpose of the vessel ownership restriction in paragraph IV(2) of this document, consider that applicants indirectly have an ownership interest in vessels which are owned by corporations, partnerships, or other forms of business organizations in which applicants own

any corporate shares, partnership interests, or other interests. For example, if an applicant owns one share of stock in a corporation that owns a vessel of the type involved in the previous assignment of halibut or sablefish QS under § 676.20(c)(1) or (c)(2), NMFS will consider the applicant to partly own such a vessel. Such an applicant will not be eligible for a loan.

(5) *Refinancing.* Applicant may refinance with the proceeds of loans any existing debts that previously financed the purchase cost of QS, provided that the QS purchases would themselves have been eligible for program financing if the program had been available at the time of QS purchase. In the instance of refinancing only, NMFS will consider loans in amounts up to 80 percent of QS' current market value (rather than original purchase cost), provided that loans will, in no event, be for an amount greater than the amount required to fully repay the QS debt being refinanced.

V. Loan Terms and Conditions

(1) *Down payment.* Applicants financing (rather than refinancing) QS purchase cost must fund 20 percent of the purchase cost from funds other than loan proceeds. If the current market value of QS whose purchase cost is being refinanced (rather than financed) is higher than its original purchase price, applicants may need less, or no, down payment. However, if the current value of QS whose purchase costs is being refinanced (rather than financed) is lower than its original purchase price, applicants may be required to provide additional down payment.

(2) *Loan amount.* The amount of a loan that finances (rather than refinances) QS purchase cost may not exceed 80 percent of QS purchase cost. Loan amounts may, however, exceed 80 percent if the current market value of QS whose purchase cost is being refinanced (rather than financed) is higher than its original purchase price.

(3) *Interest rate.* Each loan's annual interest rate will be 2 percent higher than the U.S. Treasury's cost of borrowing public funds of an equivalent maturity. For example, the annual loan interest rate would, on February 17, 1999, have been approximately 7.65 percent for a 20-year maturity. Interest is simple interest.

(4) *Maturity.* Loan maturity may not exceed 25 years, but may be shorter depending on credit and other considerations.

(5) *Repayment.* Repayment will be by equal quarterly installments of principal and interest.

(6) *Security.* The loan QS will, in every case, be the primary security for the loan. NMFS may require additional collateral to ensure the security position of the primary collateral. NMFS may require all parties with significant ownership interests in corporate or partnership applicants to personally guarantee loan repayment. Some credit risks may require additional security.

VI. Application

(1) *Open Season.* NMFS will accept for processing only those applications submitted during the open season. Applications previously filed, but not considered, in FY 1998 will automatically be considered to have been received during the open season (they need not be resubmitted to be included in the random selection process for the FY 1999 credit authority).

(2) *Method of submission.* NMFS will accept only those applications submitted by first-class U.S. mail. NMFS will not accept applications submitted by any other method (including, but not limited to any form of U.S. mail other than first class mail, any other delivery service, personal delivery, delivery by facsimile, etc.).

(3) *Submission address.* NMFS will accept only those applications addressed directly to NWFSB at the mailing address listed in the **ADDRESSES** section of this document.

(4) *Date of submission.* The date of each application's submission will be the date on which the U.S. Postal Service postmarks the envelope containing the application or other evidence of date sent.

(5) *Processing Priority.* Relative processing priority among applications submitted will be decided by random selection from among all applications submitted.

Processing priority does not mean that applications will be approved. It merely means that NWFSB will process applications in the order of their assigned processing priority.

(6) *Application form.* All applicants must use the application form. NMFS will not accept any other form of application. Open-season applicants need complete only Section A of the application. After the open season, NWFSB will contact each applicant whose processing priority makes the applicant's application eligible for processing as an FY 1999 loan and begin a standard due-diligence credit investigation. The application is available from NWFSB. NWFSB will send only Section A of the application to parties requesting the application for the purpose of submitting an open-season application. NWFSB can, upon request, do this by facsimile.

(7) *Notification of processing priority.* NWFSB will, within 7 working days after the last day of the open season, enumerate the processing priority of all open-season applications that NWFSB received. NWFSB will immediately thereafter notify each open-season applicant of the relative likelihood of its application being processed as an FY 1999 loan. NWFSB will then accomplish a due-diligence credit investigation for each application whose processing priority (and other factors) makes it eligible for processing as an FY 1999 loan.

(8) *Application fee.* The application fee is 0.5 percent of the loan amount for which a successful open-season applicant applies. Application fees will be due only for those open-season applications that NWFSB actually accepts for processing as FY 1999 loans. No application fee is due for any open-season application that NWFSB does not accept for processing as an FY 1999 loan. Although the application fee is due when the application is submitted, it is not payable until NMFS requests payment. NMFS will not request payment of the application fee until after it has accepted an application for processing as an FY 1999 loan. At that time an application review or interview will take place with the applicant and other necessary parties that affirms the applicant's compliance with basic loan eligibility and credit criteria. Half the application fee is fully earned at the time NMFS requests payment. NMFS will not return this half regardless of subsequent application disposition. The other half is fully earned only when NMFS issues an approval in a principle letter approving an application. Once it has issued an approval in a principle letter, NMFS will not return the second half of the application fee.

(9) *Crew member transfer eligibility certificate.* Crew member transfer eligibility certificates certify that parties are eligible to receive (hold) QS. The RAM Program issues these certificates to prospective QS purchasers. If, at the time of application, an applicant does not already have a crew member transfer eligibility certificate, NWFSB will advise the applicant how to apply for one. If applicants cannot get transfer eligibility certificates for the QS they intend to purchase, pursuing the loan application process further is pointless. Applicants who do not obtain appropriate transfer eligibility certificates promptly may lose their processing priority to applicants who do.

VII. Loan Processing

NMFS will, to the maximum extent possible, process loan applications in the order of their relative priority. If, however, applicants cannot, in NWFSB's discretion, promptly comply with application processing requirements, they may lose their processing priority to applicants who can. NWFSB will, from time to time, specify compliance time requirements that are responsive to the administrative need to have all credit authority fully obligated before the end of FY 1999. Applicants must comply or lose their application priority to other applicants who will.

NWFSB will conduct a standard due-diligence credit investigation. This should be a relatively simple and quick process. Once NMFS has made a due-diligence credit decision, loan approval requires certain internal clearances that will add some time to processing, but NMFS will try to accelerate processing as much as possible. Upon formal loan approval, NMFS will issue an approval in a principle letter for the applicant's acceptance.

VIII. Loan Closing

NMFS will establish all loan terms and conditions, prepare all closing documents, close all loans, and record all security interests. NMFS should generally have no need for applicants to hire attorneys for any loan purpose, but applicants may do so if they wish. Generally, the only closing costs owed by applicants will be the cost of doing title/lien searches on, or of recording security interests in, loan QS. NWFSB may need to do title/lien searches, and to record security interest, in several different jurisdictions. Closing costs must be paid by applicants at the loan closing.

IX. Title XI and 50 CFR Part 253

The general rules implementing Title XI are 50 CFR part 253, subpart B. Loans will be subject to so much of the other provisions of Title XI and of its implementing rules as can reasonably be applied to loans involving the purchase under this notice of QS (rather than the purchase of fishing vessels, fisheries shoreside facilities, or aquacultural facilities).

X. Administrative Requirements

(1) In accordance with the provisions of the Debt Collection Improvement Act of 1996, a person may not obtain any Federal financial assistance in the form of a loan (other than a disaster loan) or loan guarantee if the person has an outstanding debt (other than a debt under the Internal Revenue Code of 1986) with any Federal agency which is in a delinquent status, as determined under standards prescribed by the Secretary of the Treasury.

(2) Applicants are subject to a name-check review process. Name checks are intended to reveal if any key individuals associated with the applicant have been convicted of or are presently facing such criminal charges as fraud, theft, perjury, or other matters which significantly reflect on the applicant's management honesty or financial integrity.

(3) A false statement on an application is grounds for denial or termination of funds and grounds for possible punishment by a fine or imprisonment as provided in 18 U.S.C. 1001.

(4) Applicants must submit a completed Form CD–511, ''Certifications Regarding Debarment, Suspension and Other Responsibility Matters; Drug-Free Workplace Requirements and Lobbying,'' and the following explanations are hereby provided:

i. *Nonprocurement Debarment and Suspension*.

Prospective participants (as defined at 15 CFR 26.105) are subject to 15 CFR part 26, ''Nonprocurement Debarment and Suspension,'' and the related section of the certification form applies;

ii. *Anti-Lobbying*. Persons (as defined at 15 CFR 28.105) are subject to the lobbying provisions of 31 U.S.C. 1352, ''Limitation on use of appropriated funds to influence certain Federal contracting and financial transactions,'' and the lobbying section of the certification form prescribed above applies to applications/bids for grants, cooperative agreements, and contracts for more than $100,000, and loans and loan guarantees for more than $150,000 the certification form applies.

(5) An applicant classified for tax purposes as an individual, partnership, proprietorship, corporation, or medical corporation is required to submit a taxpayer identification number (TIN) (either social security number, employer identification number as applicable, or registered foreign organization number) on Form W–9, ''Payer's Request for Taxpayer Identification Number.'' Tax-exempt organizations and corporations (with the exception of medical corporations) are excluded from this requirement. Form W–9 shall be submitted to the Finance Officer within 60 days of the award of assistance. The TIN will be provided to the IRS by DoC on Form 1099–G, ''Statement for Recipients of Certain Government Payments.'' Recipients who either fail to provide their TIN or provide an incorrect TIN may have funding suspended until the requirement is met.

Disclosure of a Recipient's TIN is mandatory for Federal income tax reporting purposes under the authority of 26 USC, Section 6011 and 6109(d), and 26 CFR, Section 301.6109–1. This is to ensure the accuracy of income computation by the IRS. This information will be used to identify an individual who is compensated with DoC funds or paid interest under the Prompt Payment Act.

(6) Under the Inspector General Act of 1978, as amended, 5 U.S.C. App. I, section 1 *et seq.*, an audit of the award of assistance may be conducted at any time. The Inspector General of the DoC, or any of his or her duly authorized representatives, shall have access to any pertinent books, documents, papers and records of the Recipient, whether written, printed, recorded, produced or reproduced by any mechanical, magnetic or other process or medium, in order to make audits, inspections, excerpts, transcripts or other examinations as authorized by law. When the OIG requires an audit on a DoC award, the OIG will usually make the arrangements to audit the award, whether the audit is performed by OIG personnel, an independent accountant under contract with the DoC, or any other Federal, state or local audit entity.

Classification

Neither the Administrative Procedure Act nor any other law requires prior notice and opportunity for public comment about this document (which concerns loans). Consequently, the Regulatory Flexibility Act does not require a regulatory flexibility analysis.

This notice is not significant for purposes of E.O. 12866.

This notice contains and refers to collection-of-information requirements subject to the Paperwork Reduction Act. The application requirements contained in the Notice have been approved under OMB control number 0648–0012. The applications for the crew member eligibility certificate referred to have been approved under OMB control number 0648–0272.

Notwithstanding any other provision of law, no person is required to respond to, nor shall any person be subject to a penalty for failure to comply with, a collection of information subject to the requirements of the Paperwork Reduction Act unless that collection of information displays a currently valid OMB control number.

Dated: May 5, 1999.

Penelope D. Dalton,

Assistant Administrator for Fisheries, National Marine Fisheries Service.

[FR Doc. 99–11879 Filed 05–10–99; 8:45 am]

BILLING CODE 3510–22–F

DEPARTMENT OF COMMERCE

National Oceanic and Atmospheric Administration

[I.D. 050399B]

Marine Mammals; File No. 782–1510

AGENCY: National Marine Fisheries Service (NMFS), National Oceanic and Atmospheric Administration (NOAA), Commerce.

ACTION: Receipt of application.

SUMMARY: Notice is hereby given that National Marine Fisheries Service, National Marine Mammal Laboratory, has applied in due form for a permit to take killer whales (*Orcinus orca*) for purposes of scientific research.

DATES: Written or telefaxed comments must be received on or before June 10, 1999.

ADDRESSES: The application and related documents are available for review upon written request or by appointment in the following office(s):

Permits and Documentation Division, Office of Protected Resources, NMFS, 1315 East-West Highway, Room 13130, Silver Spring, MD 20910 (301/713–2289);

Regional Administrator, Northwest Region, NMFS, 7600 Sand Point Way, NE, BIN C15700, Bldg. 1, Seattle, WA, 98115–0070 (206/526–6150);and

Regional Administrator, Southwest Region, NMFS, 501 West Ocean Blvd., Suite 4200, Long Beach, CA 90802–4213 (562/980–4001).

Written comments or requests for a public hearing on this application should be mailed to the Chief, Permits and Documentation Division, F/PR1, Office of Protected Resources, NMFS, 1315 East-West Highway, Room 13705, Silver Spring, MD 20910. Those individuals requesting a hearing should set forth the specific reasons why a hearing on this particular request would be appropriate.

Comments may also be submitted by facsimile at (301) 713–0376, provided the facsimile is confirmed by hard copy submitted by mail and postmarked no later than the closing date of the comment period. Please note that comments will not be accepted by e-mail or by other electronic media.

FOR FURTHER INFORMATION CONTACT: Ruth Johnson or Sara Shapiro 301/713–2289.

SUPPLEMENTARY INFORMATION: The subject permit is requested under the authority of the Marine Mammal Protection Act of 1972, as amended (MMPA; 16 U.S.C. 1361 *et seq.*), and the Regulations Governing the Taking and Importing of Marine Mammals (50 CFR part 216).

The applicant proposes to take up to 350 killer whales (*Orcinus orca*) by biopsy sample over a 5-year period. Animals will be photographed during sampling. Samples will be exported to England for genetic analysis. Up to 2500 will be inadvertently harassed annually. The purpose of the research is to investigate genetic diversity, food web dynamics and contaminant levels in North Pacific killer whales.

In compliance with the National Environmental Policy Act of 1969 (42 U.S.C. 4321 *et seq.*), an initial determination has been made that the activity proposed is categorically excluded from the requirement to prepare an environmental assessment or environmental impact statement.

Dated: May 4, 1999.

Ann D. Terbush,

Chief, Permits and Documentation Division, Office of Protected Resources, National Marine Fisheries Service.

[FR Doc. 99–11880 Filed 5–10–99; 8:45 am]

BILLING CODE 3510–22–F

DEPARTMENT OF COMMERCE

National Oceanic and Atmospheric Administration

[I.D. 050499A]

Marine Mammals; File No. 758–1459–01

AGENCY: National Marine Fisheries Service (NMFS), National Oceanic and Atmospheric Administration (NOAA), Commerce.

ACTION: Receipt of application for amendment.

SUMMARY: Notice is hereby given that Dr. Kimberlee Beckmen, Institute of Arctic Biology, University of Alaska Fairbanks, Fairbanks, AK 99775–7000, has requested an amendment to scientific research Permit No. 758–1459.

DATES: Written or telefaxed comments must be received on or before June 10, 1999.

ADDRESSES: The amendment request and related documents are available for review upon written request or by appointment in the following office(s):

Permits and Documentation Division, Office of Protected Resources, NMFS, 1315 East-West Highway, Room 13705, Silver Spring, MD 20910 (301/713–2289); and

Alaska Region, NMFS, P.O. Box 21668, Juneau, AK 99802–1668 (309/586–7221).

Written comments or requests for a public hearing on this request should be submitted to the Chief, Permits and Documentation Division, F/PR1, Office of Protected Resources, NMFS, 1315 East-West Highway, Room 13130, Silver Spring, MD 20910. Those individuals requesting a hearing should set forth the specific reasons why a hearing on this particular amendment request would be appropriate.

Comments may also be submitted by facsimile at (301) 713–0376, provided the facsimile is confirmed by hard copy submitted by mail and postmarked no later than the closing date of the comment period. Please note that comments will not be accepted by e-mail or other electronic media.

FOR FURTHER INFORMATION CONTACT: Ruth Johnson or Sara Shapiro 301/713–2289.

SUPPLEMENTARY INFORMATION: The subject amendment to Permit No. 758–1459 issued on August 21, 1998 (63 FR 46417) is requested under the authority of the Marine Mammal Protection Act of 1972, as amended (16 U.S.C. 1361 *et seq.*), the Regulations Governing the Taking and Importing of Marine Mammals (50 CFR part 216) and the Fur Seal Act of 1966, as amended (16 U.S.C. 1151 *et seq.*).

Permit No. 758–1459 authorizes the permit holder to take up to six moribund, mortally injured northern fur seals by lethal injection and salvage the liver, blood and blubber.

The permit holder requests authorization to take up to 82 northern fur seal pups up to 5 times to conduct research activities. Up to 9,152 will be inadvertently harassed annually during capture operations. The objective is to determine if the profound decline in lymphocyte proliferation responsiveness in all 4–6 week old pups compared to their neonatal response (observed in 1996) was a normal phenomenon, and determine at what age the maternal antibody protection finally wanes and the pup's own immune system can be fully stimulated.

In compliance with the National Environmental Policy Act of 1969 (42 U.S.C. 4321 *et seq.*), an initial determination has been made that the activity proposed is categorically excluded from the requirement to prepare an environmental assessment or environmental impact statement.

Concurrent with the publication of this notice in the **Federal Register**,

NMFS is forwarding copies of this application to the Marine Mammal Commission and its Committee of Scientific Advisors.

Dated: May 4, 1999.

Ann D. Terbush,

Chief, Permits and Documentation Division, Office of Protected Resources, National Marine Fisheries Service.

[FR Doc. 99–11881 Filed 5–10–99; 8:45 am]

BILLING CODE 3510–22–F

DEPARTMENT OF DEFENSE

Office of the Secretary

[Transmittal No. 99–15]

36(b)(1) Arms Sales Notification

AGENCY: Defense Security Cooperation Agency, Department of Defense.

ACTION: Notice.

SUMMARY: The Department of Defense is publishing the unclassified text of a section 36(b)(1) arms sales notification. This is published to fulfill the requirements of section 155 of Pub. L. 104–164 dated July 21, 1996.

FOR FURTHER INFORMATION CONTACT: Ms. J. Hurd, DSCA/COMPT/RM, (703) 604–6575.

The following is a copy of a letter to the Speaker of the House of Representatives, Transmittal 99–15, with attached transmittal, policy justification, and Sensitivity of Technology.

Dated: May 5, 1999.

L.M. Bynum,

Alternate OSD Federal Register Liaison Officer, Department of Defense.

BILLING CODE 5001–10–M

DEFENSE SECURITY COOPERATION AGENCY

WASHINGTON, DC 20301-2800

29 April 1999

In reply refer to:
I-99/05175

Honorable J. Dennis Hastert
Speaker of the House of
Representatives
Washington, D.C. 20515-6501

Dear Mr. Speaker:

Pursuant to the reporting requirements of Section 36(b)(1) of the Arms Export Control Act, we are forwarding herewith Transmittal No. 99-15, concerning the Department of the Navy's proposed Letter(s) of Offer and Acceptance (LOA) to United Kingdom for defense articles and services estimated to cost $100 million. Soon after this letter is delivered to your office, we plan to notify the news media.

Sincerely,

MS Davison

MICHAEL S. DAVISON, JR.
LIEUTENANT GENERAL, USA
DIRECTOR

Attachments

Same ltr to: House Committee on International Relations
Senate Committee on Appropriations
Senate Committee on Foreign Relations
House Committee on National Security
Senate Committee on Armed Services
House Committee on Appropriations

Transmittal No. 99-15

Notice of Proposed Issuance of Letter of Offer
Pursuant to Section 36(b)(1)
of the Arms Export Control Act

(i) **Prospective Purchaser:** United Kingdom

(ii) **Total Estimated Value:**

Major Defense Equipment*	$ 70 million
Other	$ 30 million
TOTAL	$100 million

(iii) **Description of Articles or Services Offered:**
Thirty conventionally armed TOMAHAWK BLOCK IIIC Land Attack Missiles (TLAM), containers, engineering technical assistance, spare and repair parts, and other related elements of logistics support.

(iv) **Military Department:** Navy (AHA)

(v) **Sales Commission, Fee, etc., Paid, Offered, or Agreed to be Paid:** none

(vi) **Sensitivity of Technology Contained in the Defense Article or Defense Services Proposed to be Sold:** See Annex attached.

(vii) **Date Report Delivered to Congress:** 29 Apr 1999

* as defined in Section 47(6) of the Arms Export Control Act.

POLICY JUSTIFICATION

United Kingdom - TOMAHAWK BLOCK IIIC Land Attack Missiles

The Government of United Kingdom has requested a possible sale of 30 conventionally armed TOMAHAWK BLOCK IIIC Land Attack Missiles (TLAM), containers, engineering technical assistance, spare and repair parts, and other related elements of logistics support. The estimated cost is $100 million.

This sale will contribute to the foreign policy and national security objectives of the United States by improving the military capabilities of the United Kingdom while enhancing weapon system standardization and interoperability; and enhancing the defense of the Western Alliance.

The United Kingdom needs these missiles to augment their present operational inventory and to enhance their submarine launched capability. The missiles will enhance United Kingdom operational effectiveness in support of NATO. The United Kingdom, which already has TOMAHAWK missiles in its inventory, will have no difficulty absorbing these additional missiles.

The proposed sale of this equipment and support will not affect the basic military balance in the region.

The prime contractor will be Raytheon Missile Systems Company, Tucson, Arizona. There are no offset agreements proposed in connection with this sale.

Implementation of this proposed sale will not require the assignment of any additional U.S. Government personnel or contractor representatives to the United Kingdom.

There will be no adverse impact on U.S. defense readiness as a result of this proposed sale.

Transmittal No. 99-15

Notice of Proposed Issuance of Letter of Offer Pursuant to Section 36(b)(1) of the Arms Export Control Act

Annex
Item No. vi

(vi) Sensitivity of Technology:

1. The conventionally armed TOMAHAWK BLOCK IIIC Land Attack Missile (TLAM) consists of the following classified components:

a. The TOMAHAWK missile (Complete) - Guidance Set, Digital Scene Matching Area Correlator (DSMAC) Global Positioning System (GPS) when software is installed, Data Link when software/firmware is installed, Common Missile Radar Altimeter (CMRA), Operational Flight Software as well as DSMAC and GPS flight software.

2. If a technologically advanced adversary were to obtain knowledge of the specific hardware and software elements, the information could be used to develop countermeasures which might reduce weapon system effectiveness. The consequences of loss of this technology to a technologically advanced or competent adversary could result in the development of countermeasures or equivalent systems which could reduce weapons system effectiveness or be used in the development of a system which similar advanced capabilities.

3. A determination has been made that United Kingdom can provide substantially the same degree of protection for this technology as the U.S. Government. This sale is necessary in furtherance of the U.S. foreign policy and national security objectives outlined in the Policy Justification.

[FR Doc. 99–11740 Filed 5–10–99; 8:45 am]
BILLING CODE 5001–10–M

DEPARTMENT OF DEFENSE

Office of the Secretary

Board of Visitors Meeting

AGENCY Department of Defense Acquisition University.

ACTION: Board of Visitor meeting.

SUMMARY: The next meeting of the Defense Acquisition University (DAU) Board of Visitors (BoV) will be held at the Packard Conference Center, Building 184, Ft. Belvoir, Virginia on Wednesday June 2, 1999 from 0900 until 1600. The purpose of this meeting it to report back to the BoV on continuing items of interest. The agenda will also include a presentation on the most recent efforts to reorganize the University into a unified structure.

The meeting is open to the public; however because of space limitations, allocation of seating will be made on a first-come, first served basis. Persons desiring to attend the meeting should call Mr. John Michel at 703–845–6756.

Dated: May 5, 1999.

L.M. Bynum

Alternate OSD Federal Liaison Officer, Department of Defense.

[FR Doc. 99–11739 Filed 5–10–99; 8:45 am]
BILLING CODE 5001–10–M

DEPARTMENT OF DEFENSE

Marine Corps

Privacy Act of 1974; System of Records

AGENCY: Marine Corps, DoD.

ACTION: Amend and delete record systems.

SUMMARY: The U.S. Marine Corps proposes to delete and amend systems of records in its inventory of record systems subject to the Privacy Act of 1974 (5 U.S.C. 552a), as amended.

DATES: These actions will be effective without further notice on June 10, 1999, unless comments are received which result in a contrary determination.

ADDRESSES: Send comments to the Head, FOIA and Privacy Act Section, Headquarters, U.S. Marine Corps, 2 Navy Annex, Washington, DC 20380–1775.

FOR FURTHER INFORMATION CONTACT: Ms. B. L. Thompson at (703) 614–4008 or DSN 224–4008.

SUPPLEMENTARY INFORMATION: The U.S. Marine Corps record system notices for records systems subject to the Privacy Act of 1974 (5 U.S.C. 552a), as amended, have been published in the **Federal Register** and are available from the address above.

The proposed actions are not within the purview of subsection (r) of the Privacy Act (5 U.S.C. 552a), as amended, which would require the submission of a new or altered system report for each system. The specific changes to the record systems being amended are set forth below followed

by the notices, as amended, published in their entirety.

Dated: May 5, 1999.

L. M. Bynum,

Alternate OSD Federal Register Liaison Officer, Department of Defense

Deletion
MJA00014

SYSTEM NAME:

Confidential Statements of Employment/Financial Interests *(August 3, 1993, 58 FR 41254).*

Reason: These records are being maintained under a government-wide system of records notice, OGC/GOVT-2, Confidential Statements of Employment and Financial Interests.

Amendments
MAA00002

SYSTEM NAME:

Marine Corps Aircrew Performance/Qualification Information *(February 22, 1993, 58 FR 10630).*

CHANGES:

* * * * *

ROUTINE USES OF RECORDS MAINTAINED IN THE SYSTEM, INCLUDING CATEGORIES OF USERS AND THE PURPOSES OF SUCH USES:

Delete paragraphs three, four, five and six.

* * * * *

RETENTION AND DISPOSAL:

Delete entry and replace with 'Files are permanent. Five years after any decision or board action, file is retired to the Federal Records Center.'

* * * * *

MAA00002

SYSTEM NAME:

Marine Corps Aircrew Performance/Qualification Information.

SYSTEM LOCATION:

The Commandant of the Marine Corps (Code A), Headquarters, U.S. Marine Corps, Washington, DC 20380–1775.

CATEGORIES OF INDIVIDUALS COVERED BY THE SYSTEM:

Marine Corps aeronautically designated personnel (Naval Aviators, Naval Aviators, Naval Flight Officers, and aircrew members) who have been the subject of medical qualification, flight pay entitlement, and/or Flight Status Selection Board (FSSB) correspondence.

CATEGORIES OF RECORDS IN THE SYSTEM:

The file contains information on medical qualification, flight pay entitlements, and/or FSSB correspondence and the background data addressing such correspondence.

AUTHORITY FOR MAINTENANCE OF THE SYSTEM:

5 U.S.C. 30l, Departmental Regulations; 10 U.S.C. 5013, Secretary of the Navy; 10 U.S.C. 5041, Headquarters, Marine Corps.

PURPOSE(S):

To maintain records on Marine Corps aeronautically designated personnel for use by Officials and employees of the Marine Corps in the administration and management of such personnel.

ROUTINE USES OF RECORDS MAINTAINED IN THE SYSTEM, INCLUDING CATEGORIES OF USERS AND THE PURPOSES OF SUCH USES:

In addition to those disclosures generally permitted under 5 U.S.C. 552a(b) of the Privacy Act, these records or information contained therein may specifically be disclosed outside the DoD as a routine use pursuant to 5 U.S.C. 552a(b)(3) as follows:

The 'Blanket Routine Uses' set forth at the beginning of the Marine Corp's compilation of systems of records notices apply to this system.

POLICIES AND PRACTICES FOR STORING, RETRIEVING, ACCESSING, RETAINING, AND DISPOSING OF RECORDS IN THE SYSTEM:

STORAGE:

Manual and automated records.

RETRIEVABILITY:

Information is retrieved alphabetically by the last name of the individual concerned.

SAFEGUARDS:

Building containing files employs 24 hour security guards. Offices containing files are locked after working hours and personnel handling records do so only on a 'need-to-know' basis. Such personnel are trained and screened for dependability. Material that could be considered 'career-sensitive' is retained in a safe.

RETENTION AND DISPOSAL:

Files are permanent. Five years after any decision or board action, file is retired to the Federal Records Center.

SYSTEM MANAGER(S) AND ADDRESS:

The Commandant of the Marine Corps (Code A), Headquarters, U.S. Marine Corps, Washington, DC 20380–1775.

NOTIFICATION PROCEDURE:

Individuals seeking to determine whether information about themselves is contained in this system should address written inquiries to the Commandant of the Marine Corps (Code AAB), Headquarters, U.S. Marine Corps, Washington, DC 20380–1775.

RECORD ACCESS PROCEDURES:

Individuals seeking access to information about themselves contained in this system should address written inquiries to the Commandant of the Marine Corps (Code AAB), Headquarters, U.S. Marine Corps, Washington, DC 20380–1775 and should contain the full name, Social Security Number and signature.

For personal visits the individual should provide valid identification such as military identification card, Department of Defense building pass, drivers license, or other type identification that includes picture and signature. In the absence of such identification, the individual must provide sufficient data to insure that the individual is the subject of the inquiry.

CONTESTING RECORD PROCEDURES:

The U.S. Marine Corps rules for contesting contents and appealing initial agency determinations are published in Secretary of the Navy Instruction 5211.5; Marine Corps Order P5211.2; 32 CFR part 701; or may be obtained from the system manager.

RECORD SOURCE CATEGORIES:

Information is obtained from Official reports, boards, inquiries and requests. Information is also obtained from the review of Naval Aviator/Naval Flight Officer Reporting Management System data.

EXEMPTIONS CLAIMED FOR THE SYSTEM:

None.

MIL00001

SYSTEM NAME:

Assignment and Occupancy of Family House Records *(February 22, 1993, 58 FR 10630).*

CHANGES:

* * * * *

CATEGORIES OF RECORDS IN THE SYSTEM:

In the last sentence delete 'Manpower Management System and the Joint Uniform Military Pay System' and replace with 'Marine Corps Total Force System (MCTFS).'

* * * * *

RECORD SOURCE CATEGORIES:

Delete entry and replace with 'Individual's application and the Marine Corps Total Force System.'

* * * * *

MIL00001

SYSTEM NAME:

Assignment and Occupancy of Family House Records.

SYSTEM LOCATION:

System is organizationally decentralized. Records are maintained at Marine Corps Installations with family housing.

CATEGORIES OF INDIVIDUALS COVERED BY THE SYSTEM:

Military and civilian personnel eligible for or assigned to family housing on bases/stations.

CATEGORIES OF RECORDS IN THE SYSTEM:

File contains individual's application and assignment to and occupancy history of family housing. Records include, but are not limited to information from the Marine Corps Total Force System (MCTFS).

AUTHORITY FOR MAINTENANCE OF THE SYSTEM:

5 U.S.C. 30l, Departmental Regulations; 10 U.S.C. 5013, Secretary of the Navy; 10 U.S.C. 5041, Headquarters, Marine Corps.

PURPOSE(S):

To provide a record of the type of quarters and the individuals assigned to quarters for use in the management and administration of such quarters.

ROUTINE USES OF RECORDS MAINTAINED IN THE SYSTEM, INCLUDING CATEGORIES OF USERS AND THE PURPOSES OF SUCH USES:

In addition to those disclosures generally permitted under 5 U.S.C. 552a(b) of the Privacy Act, these records or information contained therein may specifically be disclosed outside the DoD as a routine use pursuant to 5 U.S.C. 552a(b)(3) as follows:

School Districts - By Officials of school district boards of education in performance of their duties under local and/or state compulsory education laws.

The 'Blanket Routine Uses' set forth at the beginning of the Marine Corp's compilation of systems of records notices apply to this system.

POLICIES AND PRACTICES FOR STORING, RETRIEVING, ACCESSING, RETAINING, AND DISPOSING OF RECORDS IN THE SYSTEM:

STORAGE:

Paper and electronics records.

RETRIEVABILITY:

Filed alphabetically by last name of housing occupant and in order of position on waiting list.

SAFEGUARDS:

Records are maintained in areas accessible only to authorized personnel. Access to electronic records is controlled by password or other user identification code.

RETENTION AND DISPOSAL:

Records are destroyed 3 fiscal years following close of fiscal year in which occupancy terminates.

SYSTEM MANAGER(S) AND ADDRESS:

The Commandant of the Marine Corps, Headquarters, U.S. Marine Corps (Code LF), Washington, DC 20380–1775.

NOTIFICATION PROCEDURE:

Individuals seeking to determine whether information about themselves is contained in this system should address written inquiries to the Commanding Officer of the Marine Corps installation from which family housing has been requested, assigned or vacated. U.S. Marine Corps official mailing addresses are incorporated into the Department of the Navy's address directory, published as an appendix to the Navy's compilation of systems of records notices.

RECORD ACCESS PROCEDURES:

Individuals seeking access to information about themselves contained in this system should address written inquiries to the Commanding Officer of the Marine Corps installation(s) at which the individual applied for or occupied family housing. U.S. Marine Corps official mailing addresses are incorporated into the Department of the Navy's address directory, published as an appendix to the Navy's compilation of systems of records notices.

Such requests should include name, Social Security Number, quarters number if known, and dates of period addressed in the inquiry.

Personal visits may be made to the installation in question any normal work day between 8:00 a.m.–4:30 p.m. For personal visits the individual should be able to provide valid personal identification.

CONTESTING RECORD PROCEDURES:

The U.S. Marine Corps rules for contesting contents and appealing initial agency determinations are published in Secretary of the Navy Instruction 5211.5; Marine Corps Order P5211.2; 32 CFR part 701; or may be obtained from the system manager.

RECORD SOURCE CATEGORIES:

Individual's application and the Marine Corps Total Force System.

EXEMPTIONS CLAIMED FOR THE SYSTEM:

None.

MIL00004

SYSTEM NAME:

Personal Property Program *(February 22, 1993, 58 FR 10630).*

CHANGES:

* * * * *

CATEGORIES OF RECORDS IN THE SYSTEM:

Add the following entries 'DD Form 788 (Application for Shipment of an Automobile)

DD Form 788-1 (Application for Shipment of a Van)

DD Form 788-2 (Application for Shipment of a Motorcycle)

DD Form 1840 (Joint Statement of Loss or Damage at Delivery)

DD Form 1840R (Notice of Loss or Damage)

SF 1200 (U.S. Government Bill of Lading Correction Notice)

SF 1203 (Personal Property Government Bill of Lading)

DD Form 1352-1 (U.S. Customs Declaration)

DD Form 1857 (Temporary Commercial Storage at Government Expense)

DD Form 1164 (Service Order for Household Goods)

DD Form 1701 (Household Goods Descriptive Inventory)

DD Form 1863 (Accessorial Services Mobile Home)

DD Form 2278 (Application for Do It Yourself Move and Counseling Checklist)'.

* * * * *

RETRIEVABILITY:

Delete the entry and replace with 'Paper records retrieved alphabetically by last name. Electronic records retrieved by last name or Social Security Number.'

* * * * *

SYSTEM MANAGER(S) AND ADDRESS:

Delete entry and replace with 'Commandant of the Marine Corps (LFT), Headquarters, U.S. Marine Corps, Washington, DC 20380-1775.'

* * * * *

MIL00004

SYSTEM NAME:

Personal Property Program.

SYSTEM LOCATION:

All Marine Corps Bases and Federal Records Centers.

CATEGORIES OF INDIVIDUALS COVERED BY THE SYSTEM:

All military personnel having shipped or stored personal property or privately owned automobiles.

CATEGORIES OF RECORDS IN THE SYSTEM:

File contains individual's applications for shipment and/or storage, related shipping documents and records of delivery and payment.

DD Form 6l9 (Statement of Accessorial Services Performed)

DD Form 788 (Application for Shipment of an Automobile)

DD Form 788-1 (Application for Shipment of a Van)

DD Form 788-2 (Application for Shipment of a Motorcycle)

DD Form 828 (Motor Vehicle Shipment Application)

DD Form 1100 (Household Goods Storage)

DD Form 1101 (Household Goods Storage Information)

DD Form 1164 (Service Order for Household Goods)

DD Form 1252 (Owner's U.S. Customs Declaration and Entry and Inspecting Officer's Certificate)

DD Form 1299 (Application for shipment and/or storage of Personal Property)

DD Form 1352-1 (U.S. Customs Declaration)

DD Form 1671 (Reweight of Household Goods)

DD Form 1701 (Household Goods Descriptive Inventory)

DD Form 1780 (Report of Carrier Services Personal Property Shipment)

DD Form 1781 (Property Owners Report on Carriers Report)

DD Form 1797 (Personal Property Counseling Checklist)

DD Form 1799 (Member's Report on Carrier Performance-Mobile Homes)

DD Form 1800 (Mobile Home Shipment Inspection at Destination)

DD Form 1840 (Joint Statement of Loss or Damage at Delivery)

DD Form 1840R (Notice of Loss or Damage)

DD Form 1841 (Schedule of Property Damages)

DD Form l842 (Claim for Personal Property against the United States)

DD Form 1845 (Demand on Carrier/Contractor)

DD Form 1857 (Temporary Commercial Storage at Government Expense)

DD Form 1863 (Accessorial Services Mobile Home)

DD Form 2278 (Application for Do It Yourself Move and Counseling Checklist)

SF 1200 (U.S. Government Bill of Lading Correction Notice)

SF 1203 (Personal Property Government Bill of Lading)

AUTHORITY FOR MAINTENANCE OF THE SYSTEM:

10 U.S.C. 5013, Secretary of the Navy; 10 U.S.C. 5041, Headquarters, Marine Corps; and E.O. 9397 (SSN).

PURPOSE(S):

To provide a record of shipment and storage of personal property for management and payment of personal property claims by officials and employees of the Marine Corps.

ROUTINE USES OF RECORDS MAINTAINED IN THE SYSTEM, INCLUDING CATEGORIES OF USERS AND THE PURPOSES OF SUCH USES:

In addition to those disclosures generally permitted under 5 U.S.C. 552a(b) of the Privacy Act, these records or information contained therein may specifically be disclosed outside the DoD as a routine use pursuant to 5 U.S.C. 552a(b)(3) as follows:

The 'Blanket Routine Uses' set forth at the beginning of the Marine Corp's compilation of systems of records notices apply to this system.

POLICIES AND PRACTICES FOR STORING, RETRIEVING, ACCESSING, RETAINING, AND DISPOSING OF RECORDS IN THE SYSTEM:

STORAGE:

Paper records in file folders. Electronic records on mass storage devices and optically stored representations of records.

RETRIEVABILITY:

Paper records retrieved alphabetically by last name. Electronic records retrieved by last name or Social Security Number.

SAFEGUARDS:

Records are maintained in areas accessible only to authorized personnel who are properly cleared and trained.

RETENTION AND DISPOSAL:

Records on international shipments of household goods moved via freight forwarders are retained for 6 years after the period covered by the account and then destroyed. All other household goods records are destroyed when 3 years old.

SYSTEM MANAGER(S) AND ADDRESS:

Commandant of the Marine Corps (LFT), Headquarters, U.S. Marine Corps, Washington, DC 20380–1775.

NOTIFICATION PROCEDURE:

Individuals seeking to determine whether information about themselves is contained in this system should address written inquiries to the Commandant of the Marine Corps (Code LFT), Headquarters, U.S. Marine Corps, Washington, DC 20380–1775.

RECORD ACCESS PROCEDURES:

Individuals seeking access to information about themselves contained in this system should address written inquiries to the Commandant of the Marine Corps (LFT), Headquarters, U.S. Marine Corps, Washington, DC 20380–1775.

Written requests for information should contain the full name of individual, Social Security Number, current address and telephone number.

For personal visits, the individual should be able to provide acceptable identification and give some verbal information that could be verified with his 'case' folder.

CONTESTING RECORD PROCEDURES:

The U.S. Marine Corps rules for contesting contents and appealing initial agency determinations are published in Secretary of the Navy Instruction 5211.5; Marine Corps Order P5211.2; 32 CFR part 701; or may be obtained from the system manager.

RECORD SOURCE CATEGORIES:

Application and related forms from the individual requesting access; notification of personal clearance from the system manager research note/documents from records custodians.

EXEMPTIONS CLAIMED FOR THE SYSTEM:

None.

MIN00002

SYSTEM NAME:

POW/MIA Intelligence Analysis and Debrief Files *(February 22, 1993, 58 FR 10630).*

CHANGES:

* * * * *

ROUTINE USES OF RECORDS MAINTAINED IN THE SYSTEM, INCLUDING CATEGORIES OF USERS AND THE PURPOSES OF SUCH USES:

Delete second paragraph.

* * * * *

MIN00002

SYSTEM NAME:

POW/MIA Intelligence Analysis and Debrief Files.

SYSTEM LOCATION:

Primary system: Headquarters, U.S. Marine Corps, Washington, DC 20380–1775. Major Marine Corps commands maintain derivative files.

CATEGORIES OF INDIVIDUALS COVERED BY THE SYSTEM:

Members of the U.S. Marine Corps or Marine Corps Reserve either currently or previous prisoner of war (POW), detained by hostile forces or declared missing in action (MIA).

CATEGORIES OF RECORDS IN THE SYSTEM:

Narrative of loss incident; investigations regarding loss incident; casualty reports intelligence reports

possible identifying subject; articles, statements, lists and photographs published in world news media or broadcast over hostile public radio; portions of official debriefings or debriefing summaries; and analytical evaluations of information contained in file.

AUTHORITY FOR MAINTENANCE OF THE SYSTEM:

5 U.S.C. 301, Departmental Regulations; 10 U.S.C. 5013, Secretary of the Navy; 10 U.S.C. 5041, Headquarters, Marine Corps.

PURPOSE(S):

To provide a record of information collected on individuals classified as prisoners of war or missing in action until their return to military control or otherwise change of status.

ROUTINE USES OF RECORDS MAINTAINED IN THE SYSTEM, INCLUDING CATEGORIES OF USERS AND THE PURPOSES OF SUCH USES:

In addition to those disclosures generally permitted under 5 U.S.C. 552a(b) of the Privacy Act, these records or information contained therein may specifically be disclosed outside the DoD as a routine use pursuant to 5 U.S.C. 552a(b)(3) as follows:

The 'Blanket Routine Uses' set forth at the beginning of the Marine Corp's compilation of systems of records notices apply to this system.

POLICIES AND PRACTICES FOR STORING, RETRIEVING, ACCESSING, RETAINING, AND DISPOSING OF RECORDS IN THE SYSTEM:

STORAGE:

Paper records in file folders; photographs, film and tape recordings.

RETRIEVABILITY:

Filed alphabetically by last name of the individual.

SAFEGUARDS:

Secured in GSA approved security containers within locked office spaces. Access is granted only to those authorized persons who are properly cleared and having a need-to-know.

RETENTION AND DISPOSAL:

Records maintained within Marine Corps Intelligence Division as long as individual's status remains POW/MIA. Record is retired to Marine Corps Historical Division two years after return to U.S. control or when status is changed to KIA/KIA-BNR.

SYSTEM MANAGER(S) AND ADDRESS:

Commandant of the Marine Corps (Code C4I), Headquarters, U.S. Marine Corps, Washington, DC 20380–1775.

NOTIFICATION PROCEDURE:

Individuals seeking to determine whether information about themselves is contained in this system should address written inquiries to the Commandant of the Marine Corps (Code C4I), Headquarters, U.S. Marine Corps, Washington, DC 20380–1775.

RECORD ACCESS PROCEDURES:

Individuals seeking access to information about themselves contained in this system should address written inquiries to the Commandant of the Marine Corps (Code C4I), Headquarters, U.S. Marine Corps, Washington, DC 20380–1775.

CONTESTING RECORD PROCEDURES:

The U.S. Marine Corps rules for contesting contents and appealing initial agency determinations are published in Secretary of the Navy Instruction 5211.5; Marine Corps Order P5211.2; 32 CFR part 701; or may be obtained from the system manager.

RECORD SOURCE CATEGORIES:

Other records of the activity; investigators; witnesses; correspondents; intelligence reports from the services, Defense Intelligence Agency, Central Intelligence Agency, State Department and other government agencies; Foreign Broadcast Information Service; newspapers; magazines; television; radio; and movies.

EXEMPTIONS CLAIMED FOR THE SYSTEM:

None.

MJA00016

SYSTEM NAME:

Judge Advocate Division 'D' Files *(August 3, 1993, 58 FR 41254).*

CHANGES:

* * * * *

CATEGORIES OF INDIVIDUALS COVERED BY THE SYSTEM:

Delete the entry and replace with 'All Marine Corps Judge Advocates currently on active duty, in a reserve capacity and those individuals who are in the training cycle to become Judge Advocates.'

* * * * *

MJA00016

SYSTEM NAME:

Judge Advocate Division 'D' Files.

SYSTEM LOCATION:

The Director, Judge Advocate Division, Headquarters, U.S. Marine Corps, Washington, DC 20380–1775.

CATEGORIES OF INDIVIDUALS COVERED BY THE SYSTEM:

All Marine Corps Judge Advocates currently on active duty, in a reserve capacity and those individuals who are in the training cycle to become Judge Advocates.

CATEGORIES OF RECORDS IN THE SYSTEM:

The file contains correspondence from the Judge Advocates and prospective Judge Advocates regarding requests for personnel actions such as transfer, school assignment, etc. Additionally, the file contains information pertaining to judge advocate qualifications such as schooling results, commendatory matters and derogatory matter which bears on the assignment and other personnel matters relating to judge advocates.

AUTHORITY FOR MAINTENANCE OF THE SYSTEM:

5 U.S.C. 30l, Departmental Regulations; 10 U.S.C. 5013, Secretary of the Navy; 10 U.S.C. 5041, Headquarters, Marine Corps; and E.O. 9397 (SSN).

PURPOSE(S):

To provide a record of qualified judge advocates for use in transfer, school assignment and other personnel matters relating to judge advocates.

ROUTINE USES OF RECORDS MAINTAINED IN THE SYSTEM, INCLUDING CATEGORIES OF USERS AND THE PURPOSES OF SUCH USES:

In addition to those disclosures generally permitted under 5 U.S.C. 552a(b) of the Privacy Act, these records or information contained therein may specifically be disclosed outside the DoD as a routine use pursuant to 5 U.S.C. 552a(b)(3) as follows:

The 'Blanket Routine Uses' that appear at the beginning of the Marine Corps' compilation of systems of records notices apply to this system.

POLICIES AND PRACTICES FOR STORING, RETRIEVING, ACCESSING, RETAINING, AND DISPOSING OF RECORDS IN THE SYSTEM:

STORAGE:

File folders and electronic database.

RETRIEVABILITY:

Alphabetically by last name of member.

SAFEGUARDS:

Access is limited. The records are kept in file cabinets within a locked room. Access to electronic records is controlled by password or other user identification code.

RETENTION AND DISPOSAL:

Retained for 2 years, then destroyed.

SYSTEM MANAGER(S) AND ADDRESS:

The Director, Judge Advocate Division, Headquarters, U.S. Marine Corps, Washington, DC 20380–1775.

NOTIFICATION PROCEDURE:

Individuals seeking to determine whether information about themselves is contained in this system should address written inquiries to the Director, Judge Advocate Division, Headquarters, U.S. Marine Corps (Code JA), Washington, DC 20380–1775.

Written requests should contain the full name, grade, and Social Security Number of the individual.

RECORD ACCESS PROCEDURES:

Individuals seeking access to information about themselves contained in this system should address written inquiries to the Director, Judge Advocate Division, Headquarters, U. S. Marine Corps (Code JA), Washington, DC 20380–1775.

Written requests should contain the full name, grade, and Social Security Number of the individual.

CONTESTING RECORD PROCEDURES:

The U.S. Marine Corps rules for contesting contents and appealing initial agency determinations are published in Secretary of the Navy Instruction 5211.5; Marine Corps Order P5211.2; 32 CFR part 701; or may be obtained from the system manager.

RECORD SOURCE CATEGORIES:

Individuals. Service records of the individuals involved. Judge Advocates and Commanders of the individuals involved. Schools from which the individuals have obtained their graduate or undergraduate degrees or currently in residence.

EXEMPTIONS CLAIMED FOR THE SYSTEM:

None.

MMN00006

SYSTEM NAME:

Marine Corps Military Personnel Records (OQR/SRB) *(February 22, 1993, 58 FR 10630).*

CHANGES:

* * * * *

STORAGE:

Delete the entry and replace with 'Records are stored on paper in file folders, magnetic megastorage and on microfiche.'

* * * * *

RETENTION AND DISPOSAL:

In the second sentence delete 'four months' and replace with 'one year.'

* * * * *

MMN00006

SYSTEM NAME:

Marine Corps Military Personnel Records (OQR/SRB).

SYSTEM LOCATION:

Primary system: Headquarters, U.S. Marine Corps (Code MMSB), 2008 Elliot Road, Quantico, VA 22134–5030.

Decentralized segments: Commanding officer of the organization to which the Marine officer or enlisted individual is assigned for duty and has responsibility for the Officer Qualification Records/ Service Record Books (OQR/SRB).

CATEGORIES OF INDIVIDUALS COVERED BY THE SYSTEM:

All Marine Corps military personnel (enlisted/officer): Reserve, retired and discharged or otherwise separated.

CATEGORIES OF RECORDS IN THE SYSTEM:

The system contains the Official Military Personnel File, SRB and OQR.

AUTHORITY FOR MAINTENANCE OF THE SYSTEM:

5 U.S.C. 30l, Departmental Regulations; 10 U.S.C. 5013, Secretary of the Navy; 10 U.S.C. 5041, Headquarters, Marine Corps; and E.O. 9397 (SSN).

PURPOSE(S):

To provide a record on all Marine Corps military personnel for use in management of resources, screening and selection for promotion, training and educational programs, administration of appeals, grievances, discipline, litigations and adjudication of claims and determination of benefits and entitlements.

ROUTINE USES OF RECORDS MAINTAINED IN THE SYSTEM, INCLUDING CATEGORIES OF USERS AND THE PURPOSES OF SUCH USES:

In addition to those disclosures generally permitted under 5 U.S.C. 552a(b) of the Privacy Act, these records or information contained therein may specifically be disclosed outside the DoD as a routine use pursuant to 5 U.S.C. 552a(b)(3) as follows:

To officials and employees of the Coast Guard and National Guard in the performance of their official duties relating to screening members who have expressed a positive interest in an interservice transfer, enlistment, appointment or acceptance.

To agents of the Secret Service in connection with matters under the jurisdiction of that agency upon presentation of credentials.

To private organizations under government contract to perform random analytical research into specific aspects of military personnel management and administrative procedures.

To officials and employees of the American Red Cross and Navy Relief Society in the performance of their duties. Access will be limited to those portions of the member's record required to effectively assist the member.

To officials and employees of the Sergeant at Arms of the U.S. House of Representatives in the performance of official duties related to the verification of Marine Corps service of Members of Congress. Access will be limited to those portions of the member's record required to verify service time, active and reserve.

To state, local, and foreign (within Status of Forces agreements) law enforcement agencies or their authorized representatives in connection with litigation, law enforcement, or other matters under the jurisdiction of such agencies.

To officials and employees of the Department of Veterans Affairs, Department of Health and Human Services, and Selective Service Administration in the performance of their official duties related to eligibility, notification, and assistance in obtaining benefits by members and former members of the Marine Corps.

To officials and employees of the Department of Veterans Affairs in the performance of their official duties relating to approved research projects.

To officials and employees of other Departments and Agencies of the Executive Branch of government, upon request, in performance of their official duties related to the management, supervision, and administration of members and former members of the Marine Corps.

The 'Blanket Routine Uses' set forth at the beginning of the Marine Corp's compilation of systems of records notices apply to this system.

POLICIES AND PRACTICES FOR STORING, RETRIEVING, ACCESSING, RETAINING, AND DISPOSING OF RECORDS IN THE SYSTEM:

STORAGE:

Records are stored on paper in file folders, magnetic megastorage and on microfiche.

RETRIEVABILITY:

The records at Headquarters, U.S. Marine Corps (all active and reserve officer records, all temporary disability retired records, all active and organized reserve and Fleet Marine Corps Reserve enlisted records of personnel joined/ transferred to these components subsequent to June 30, 1974, all former Commandants, all living retired officers (who served in General Officer grade, records of all personnel separated/ retired four months or less) are retrieved by full name and Social Security Number. Except for OQR's and SRB's of participating members, all other categories of Marine Corps military

personnel records are maintained at the National Personnel Records Center, St. Louis, MO. Those retired to St. Louis prior to January 1, 1964 and/or those with military service numbers (MSN) below 1800000 are retrieved by MSN and full name. All other Marine Corps records retired to St. Louis, MO are accessed by MSN and/or Social Security Number and are retrieved by an assigned registry number.

SAFEGUARDS:

Restricted access to building and all areas where data is maintained. Records are maintained in areas accessible only by authorized personnel who have been properly screened, cleared, and trained.

RETENTION AND DISPOSAL:

Records are permanent. Records maintained at Headquarters, U.S. Marine Corps are transferred to the National Personnel Records Center, 9700 Page Avenue, St. Louis, MO 63132–5100, one year after separation, placement on the Permanent Disability Retired List, retirement, retirement from Fleet Marine Corps Reserve, death of an officer who served in General Officer grade and former Marines no longer considered of newsworthy status.

SYSTEM MANAGER(S) AND ADDRESS:

Commandant of the Marine Corps (Code MMSB), Headquarters, U.S. Marine Corps, 2008 Elliot Road, Quantico, VA 22134–5030.

NOTIFICATION PROCEDURE:

Individuals seeking to determine whether this system of records contains information about themselves should address written inquiries to the Commandant of the Marine Corps (Code MMSB), Headquarters, U.S. Marine Corps, 2008 Elliot Road, Quantico, VA 22134–5030 (for active duty members); or to the Director, National Personnel Records Center, 9700 Page Avenue, St. Louis, MO 63132–5100 (for separated members).

Individuals seeking to determine information about their OQR/SRB records maintained by their respective commanding officer should address written inquiries to the command concerned. U.S. Marine Corps official mailing addresses are incorporated into Department of the Navy's mailing addresses, published as an appendix to the Navy's compilation of record system notices.

Written requests should contain the full name, Social Security Number, and signature of the requester.

RECORD ACCESS PROCEDURES:

Individuals seeking access to records about themselves contained in this system of records should address written requests to the Commandant of the Marine Corps (Code MMSB), Headquarters, U.S. Marine Corps, 2008 Elliot Road, Quantico, VA 22134–5030 (for active duty personnel); to the respective commanding officer of the command concerned for OQR/SRB; or to the Director, National Personnel Records Center, 9700 Page Avenue, St. Louis, MO 63132–5100 (for separated members).

Written requests should include the full name, Social Security Number, and signature of the requester.

The individual may visit any of the above activities for review of records. Proof of identification may consist of an individual's active, reserve or retired identification card, Armed Forces Report of Transfer or Discharge (DD Form 214), discharge certificate, driver's license, or other data sufficient to insure that the individual is the subject of the record.

CONTESTING RECORD PROCEDURES:

The U.S. Marine Corps rules for contesting contents and appealing initial agency determinations are published in Secretary of the Navy Instruction 5211.5; Marine Corps Order P5211.2; 32 CFR part 701; or may be obtained from the system manager.

RECORD SOURCE CATEGORIES:

Staff agencies and subdivisions of Headquarters, U.S. Marine Corps; Marine Corps commands and organizations; other agencies of federal, state, and local government; medical reports; correspondence from financial and other commercial enterprises; correspondence and records of educational institutions; correspondence of private citizens addressed directly to the Marine Corps or via the U.S. Congress and other agencies; investigations to determine suitability for enlistment, security clearances, and special assignments; investigations related to disciplinary proceedings; and the individual of the record.

EXEMPTIONS CLAIMED FOR THE SYSTEM:

None.

MMN00019

SYSTEM NAME:

Drug/Alcohol Abuse Reporting Program *(February 22, 1993, 58 FR 10630).*

CHANGES:

* * * * *

ROUTINE USES OF RECORDS MAINTAINED IN THE SYSTEM, INCLUDING CATEGORIES OF USERS AND THE PURPOSE OF SUCH USES:

Delete paragraphs five and seven.

* * * * *

MMN00019

SYSTEM NAME:

Drug/Alcohol Abuse Reporting Program.

SYSTEM LOCATION:

Primary System - Headquarters, U.S. Marine Corps, Washington, DC 20380–1775.

Decentralized Segments - Navy Drug Rehabilitation Centers, Navy and Marine Corps Counseling and Assistance Centers, Navy Regional Medical Centers, Navy Alcohol Rehabilitation Drydocks, Naval Health Research Center, Navy Correction Centers and local activities to which an individual is assigned. U.S. Marine Corps official mailing addresses are incorporated into the Department of the Navy's address directory, published as an appendix to the Navy's compilation of systems of records notices.

CATEGORIES OF INDIVIDUALS COVERED BY THE SYSTEM:

All military personnel who have been tested for, identified, evaluated, apprehended, or rehabilitated for drug or alcohol abuse or who have been granted drug abuse exemption; or who are seeking assistance in drug or alcohol abuse programs.

All military personnel who have been granted drug abuse exemption.

All military personnel who are seeking assistance in drug or alcohol abuse programs.

CATEGORIES OF RECORDS IN THE SYSTEM:

Drug abuse identification/ rehabilitation statistical reports, alcohol abuse identification/ rehabilitation statistical reports, grant of drug exemption report, request for disposition on drug dependent personnel, grant of exemption/ rehabilitation case file to include medical evaluations, counselor evaluations, monthly progress reports, alcoholism education roster, and such correspondence or messages sent or sent by the system manager pertaining to the individual concerned. Urinalysis specimen control register and military police drug/alcohol related offense reports.

AUTHORITY FOR MAINTENANCE OF THE SYSTEM:

Title V, Pub.L. 92–129; Section 413, Pub.L. 92–255.

PURPOSE(S):

To provide a record of all individuals participating in drug/alcohol abuse programs for use by Marine Corps Officials in the management of such programs.

ROUTINE USES OF RECORDS MAINTAINED IN THE SYSTEM, INCLUDING CATEGORIES OF USERS AND THE PURPOSES OF SUCH USES:

In addition to those disclosures generally permitted under 5 U.S.C. 552a(b) of the Privacy Act, these records or information contained therein may specifically be disclosed outside the DoD as a routine use pursuant to 5 U.S.C. 552a(b)(3) as follows:

Records of identity, diagnosis, prognosis, or treatment of any client/patient, maintained in connection with the performance of any alcohol or drug abuse prevention and treatment function conducted, regulated, or directly or indirectly assisted by any department or agency of the United States, shall, except as provided therein, be confidential and disclosed only for the purposes and under the circumstances expressly authorized in 42 U.S.C. 290dd-2. These statutes take precedence over the Privacy Act of 1974, in regard to accessibility of such records except to the individual to whom the record pertains.

Within the Armed Forces or within those components of the Department of Veterans Affairs furnishing health care to veterans or between such components and the Armed Forces.

To medical personnel outside the Armed Forces to the extent necessary to meet a bona fide medical emergency.

To qualified personnel for the purpose of conducting scientific research, management or financial audits, or program evaluation, but such personnel may not identify, directly or indirectly, any individual patient in any report of such research, audit or evaluation, or otherwise disclose identities in any manner.

The 'Blanket Routine Uses' set forth at the beginning of the Marine Corp's compilation of systems of records notices apply to this system.

POLICIES AND PRACTICES FOR STORING, RETRIEVING, ACCESSING, RETAINING, AND DISPOSING OF RECORDS IN THE SYSTEM:

STORAGE:

File folders, card files, punched cards, magnetic tapes.

RETRIEVABILITY:

Name, Social Security Number, case number. When names and Social Security Numbers are removed, data is aggregated for use in research, management information, and planning.

SAFEGUARDS:

Records are maintained in areas accessible only to authorized personnel who are properly screened, cleared, and trained.

RETENTION AND DISPOSAL:

Paper files are maintained for two years, then destroyed. Records stored on magnetic tapes are maintained indefinitely.

SYSTEM MANAGER(S) AND ADDRESS:

Commandant of the Marine Corps (Code MRT), Headquarters, U.S. Marine Corps, Washington, DC 20380–1775.

NOTIFICATION PROCEDURE:

Individuals seeking to determine whether information about themselves is contained in this system should address written inquiries to the Commandant of the Marine Corps (Code MRT), Headquarters, U.S. Marine Corps, Washington, DC 20380–1775.

Requests must contain full name, Social Security Number, military status, address and signature of requester. (Those inquiring about records at Confinement Centers must have their signature notarized, if not confined at time of request.) Individuals may visit the Commandant of the Marine Corps, (Code MHH), located in the Clarendon Building, Arlington, VA, for assistance with records at that location; individuals may also visit local activities concerned. U.S. Marine Corps official mailing addresses are incorporated into the Department of the Navy's address directory, published as an appendix to the Navy's compilation of systems of records notices. Individuals must provide proof of identification such as military identification card, driver's license, or other picture-bearing identification.

RECORD ACCESS PROCEDURES:

Individuals seeking access to information about themselves contained in this system should address written inquiries to the Commandant of the Marine Corps (Code MRT), Headquarters, U.S. Marine Corps, Washington, DC 20380–1775.

Requests must contain full name, Social Security Number, military status, address and signature of requester. (Those inquiring about records at Confinement Centers must have their signature notarized, if not confined at time of request.) Individuals may visit the Commandant of the Marine Corps, (Code MHH), located in the Clarendon Building, Arlington, VA, for assistance with records at that location; individuals may also visit local activities concerned. U.S. Marine Corps official mailing addresses are incorporated into the Department of the Navy's address directory, published as an appendix to the Navy's compilation of systems of records notices. Individuals must provide proof of identification such as military identification card, driver's license, or other picture-bearing identification.

CONTESTING RECORD PROCEDURES:

The U.S. Marine Corps rules for contesting contents and appealing initial agency determinations are published in Secretary of the Navy Instruction 5211.5; Marine Corps Order P5211.2; 32 CFR part 701; or may be obtained from the system manager.

RECORD SOURCE CATEGORIES:

Individual concerned, other records of the activity, medical personnel, military police or other correspondences.

EXEMPTIONS CLAIMED FOR THE SYSTEM:

None.

MMN00044

SYSTEM NAME:

Equal Opportunity Information and Support System *(February 22, 1993, 58 FR 10630).*

CHANGES:

* * * * *

SYSTEM NAME:

Delete entry and replace with 'Central Registry System Discrimination and Sexual Harassment Database (CRS/DASH).'

CATEGORIES OF INDIVIDUALS COVERED BY THE SYSTEM:

Delete this entry and replace with 'Marine Corps personnel who submit complaints of sexual harassment or discrimination and Marine Corps personnel who are under formal or informal investigation as a result of complaints of sexual harassment or discrimination.'

CATEGORIES OF RECORDS IN THE SYSTEM:

Delete the entry and replace with 'Correspondence and records compiled pursuant to the processing of a complaint concerning sexual harassment or discrimination, incident data, endorsements, recommendations and resolutions of formal and informal investigations concerning aspects of equal opportunity complaints.'

* * * * *

PURPOSE(S):

Delete the entry and replace 'To provide a record of Marine Corps personnel who have committed acts of sexual harassment or discrimination,

and a record of any formal or informal investigation conducted in connection with allegations of sexual harassment or discrimination.'

ROUTINE USES OF RECORDS MAINTAINED IN THE SYSTEM, INCLUDING CATEGORIES OF USERS AND THE PURPOSES OF SUCH USES:

Delete paragraph three.

* * * * *

SAFEGUARDS:

Delete entry and replace with 'The electronic files are maintained in a computer database that is password protected with limited access. The building has controlled access after normal work hours and access is monitored by duty personnel. Access to files is limited to official capacity on a need-to-know basis. All files are encrypted to prevent unlawful downloading of information. Files held by field activities are maintained in an electronic database accessible to only authorized personnel. Paper files maintained at field activities are maintained in areas assessable to only authorized personnel with a need to know.'

RETENTION AND DISPOSAL:

Delete entry and replace with 'Paper records are disposed of two years after administrative closing of a complaint. Electronic files are maintained in CRS/DASH electronic archive for five years, then erased.'

* * * * *

MMN00044

SYSTEM NAME:

Central Registry System Discrimination and Sexual Harassment Database (CRS/DASH).

SYSTEM LOCATION:

Commandant of the Marine Corps (Code MPE), Headquarters, U.S. Marine Corps, 3280 Russell Road, Quantico, VA 22134-5101 and all Marine Corps activities. U.S. Marine Corps official mailing addresses are incorporated into the Department of the Navy's address directory, published as an appendix to the Navy's compilation of systems of records notices.

CATEGORIES OF INDIVIDUALS COVERED BY THE SYSTEM:

Marine Corps personnel who submit complaints of sexual harassment or discrimination and Marine Corps personnel who are under formal or informal investigation as a result of complaints of sexual harassment or discrimination.

CATEGORIES OF RECORDS IN THE SYSTEM:

Correspondence and records compiled pursuant to the processing of a complaint concerning sexual harassment or discrimination, incident data, endorsements, recommendations and resolutions of formal and informal investigations concerning aspects of equal opportunity complaints.

AUTHORITY FOR MAINTENANCE OF THE SYSTEM:

Title VII of the Civil Rights Act of 1964, as amended, 42 U.S.C. 2000e–16(b) and (c).

PURPOSE(S):

To provide a record of Marine Corps personnel who have committed acts of sexual harassment or discrimination, and a record of any formal or informal investigation conducted in connection with allegations of sexual harassment or discrimination.

ROUTINE USES OF RECORDS MAINTAINED IN THE SYSTEM, INCLUDING CATEGORIES OF USERS AND THE PURPOSES OF SUCH USES:

In addition to those disclosures generally permitted under 5 U.S.C. 552a(b) of the Privacy Act, these records or information contained therein may specifically be disclosed outside the DoD as a routine use pursuant to 5 U.S.C. 552a(b)(3) as follows:

Officials and employees of other Departments and agencies of the Executive Branch of government, upon request, in the performance of their official duties related in equal opportunity matters.

The 'Blanket Routine Uses' set forth at the beginning of the Marine Corp's compilation of systems of records notices apply to this system.

POLICIES AND PRACTICES FOR STORING, RETRIEVING, ACCESSING, RETAINING, AND DISPOSING OF RECORDS IN THE SYSTEM:

STORAGE:

Electronic and paper files.

RETRIEVABILITY:

Files are retrieved alphabetically by name of the complainant or by the name of the individual who is the subject of the complaint.

SAFEGUARDS:

The electronic files are maintained in a computer database that is password protected with limited access. The building has controlled access after normal work hours and access is monitored by duty personnel. Access to files is limited to official capacity on a need-to-know basis. All files are encrypted to prevent unlawful downloading of information. Files held by field activities are maintained in an electronic database accessible to only authorized personnel. Paper files maintained at field activities are maintained in areas assessable to only authorized personnel with a need to know.

RETENTION AND DISPOSAL:

Paper records are disposed of two years after administrative closing of a complaint. Electronic files are maintained in CRS/DASH electronic archive for five years, then erased.

SYSTEM MANAGER(S) AND ADDRESS:

Commandant of the Marine Corps (Code MPE), ATTN: Head, Manpower Equal Opportunity Branch, Headquarters, U.S. Marine Corps, 3280 Russell Road, Quantico, VA 22134-5101.

NOTIFICATION PROCEDURE:

Individuals seeking to determine whether information about themselves is contained in this system should address written inquiries to the Commandant of the Marine Corps (Code MPE), ATTN: Head, Manpower Equal Opportunity Branch, Headquarters, U.S. Marine Corps, 3280 Russell Road, Quantico, VA 22134-5101.

Written request for information should contain the individual's name, Social Security Number, and signature.

Personnel may provide requests in person to the field activity Commanding Officer, or to the Commandant of the Marine Corps (Code MPE), ATTN: Head, Manpower Equal Opportunity Branch, Headquarters, U.S. Marine Corps, 3280 Russell Road, Quantico, VA 22134-5101. Individuals should be able to provide personal identification to include valid military identification or two valid civilian items of identification such as driver's license, passport, credit cards, etc.

RECORD ACCESS PROCEDURES:

Individuals seeking access to information about themselves contained in this system should address written inquiries to the Commandant of the Marine Corps (Code MPE), ATTN: Head, Manpower Equal Opportunity Branch, Headquarters, U.S. Marine Corps, 3280 Russell Road, Quantico, VA 22134-5101.

Written request for information should contain the individual's name, Social Security Number, and signature.

Personnel may provide requests in person to the field activity Commanding Officer, or to the Commandant of the Marine Corps (Code MPE), ATTN: Head, Manpower Equal Opportunity Branch, Headquarters, U.S. Marine Corps, 3280 Russell Road, Quantico, VA 22134-5101. Individuals should be able to provide personal identification to include valid military identification or two valid

civilian items of identification such as driver's license, passport, credit cards, etc.

CONTESTING RECORD PROCEDURES:

The U.S. Marine Corps rules for contesting contents and appealing initial agency determinations are published in Secretary of the Navy Instruction 5211.5; Marine Corps Order P5211.2; 32 CFR part 701; or may be obtained from the system manager.

RECORD SOURCE CATEGORIES:

Individual concerned, other systems, investigations, witnesses and correspondents.

EXEMPTIONS CLAIMED FOR THE SYSTEM:

None.

[FR Doc. 99–11745 Filed 5–10–99; 8:45 am]

BILLING CODE 5001–10–F

DEPARTMENT OF DEFENSE

Department of the Army

Privacy Act of 1974; System of Records

AGENCY: Department of the Army, DoD.

ACTION: Notice to amend a system of records.

SUMMARY: The Department of the Army is amending a system of records notice in its existing inventory of record systems subject to the Privacy Act of 1974, (5 U.S.C. 552a), as amended.

DATES: This amendment will be effective without further notice on June 10, 1999, unless comments are received which result in a contrary determination.

ADDRESSES: Privacy Act Officer, Records Management Program Division, U.S. Total Army Personnel Command, ATTN: TAPC-PDR-P, Stop C55, Ft. Belvoir, VA 22060–5576.

FOR FURTHER INFORMATION CONTACT: Ms. Janice Thornton at (703) 806–4390 or DSN 656–4390.

SUPPLEMENTARY INFORMATION: The Department of the Army systems of records notices subject to the Privacy Act of 1974, (5 U.S.C. 552a), as amended, have been published in the **Federal Register** and are available from the address above.

The specific changes to the record system being amended are set forth below followed by the notice, as amended, published in its entirety. The proposed amendments are not within the purview of subsection (r) of the Privacy Act of 1974, (5 U.S.C. 552a), as amended, which requires the submission of a new or altered system report.

Dated: May 5, 1999.

L.M. Bynum,

Alternate OSD Federal Register Liaison Officer, Department of Defense.

A0020–1a SAIG

SYSTEM NAME:

Inspector General Investigation Files *(February 22, 1993, 58 FR 10002).*

CHANGES:

* * * * *

CATEGORIES OF INDIVIDUALS COVERED BY THE SYSTEM:

Delete entry and replace with 'Any individual, military or civilian, against whom allegations of wrongdoing have been made related to violations of laws, rules, or regulations or to mismanagement, gross waste of funds, or abuse of authority, that have been reviewed or investigated.'

CATEGORIES OF RECORDS IN THE SYSTEM:

Delete entry and replace with 'Investigative case files containing investigative reports, such as, preliminary inquiries and Reports of Investigation (ROIs), and administrative documents; and computer indices. ROIs include the authority for the inquiry/investigation, matters investigate, narrative, summaries/excerpts of testimony given by witnesses and appended exhibits that may include supporting documents, documentary evidence, summaries of interviews or transcripts of verbatim testimony, or other investigative information from Federal, State, and local investigative agencies and departments. Administrative documents in the files include those that guide or facilitate inquiry/investigative activities in the cases and provide the opening, transfer, or closing data for the cases. Computerized indices contain the names/subjects of the inquiry/investigation, opening and closing dates, codes for the type of allegations and their disposition, brief summaries of allegations, case notes, locations of the inquiries/investigations and the assigned case numbers.'

AUTHORITY FOR MAINTENANCE OF THE SYSTEM:

Delete entry and replace with '10 U.S.C. 3013, Secretary of the Army; 10 U.S.C. 3014; 10 U.S.C. 3020; 10 U.S.C. 3065(a); Inspector General Act of 1978 (Pub L. 95-452), as amended.'

PURPOSE(S):

Delete entry and replace with 'To review and conduct non-criminal law enforcement inquiries/investigations into allegations of wrongdoing by Army personnel related to violations of laws, rules, or regulations or to mismanagement, gross waste of funds, or abuse of authority and report the results to the Office of the Secretary of Defense, the Department of Defense Inspector General, Office of the Secretary of the Army and Army officials, and to commanders so they may discharge their responsibilities under the Inspector General Act of 1978 for maintaining discipline, law, and order.

To provide detailed information necessary for the Secretary of Defense and Secretary of the Army, Army officials and commanders to direct further investigation, effect corrective personnel or other administrative action; to provide facts and evidence upon which to base prosecution; to provide information to other investigative elements of the Army, Department of Defense, other Federal. State, or local agencies having jurisdiction over the substance of the allegations or a related investigative interest; to provide information upon which determinations may be made for individuals' suitability for various personnel actions including but not limited to retention, promotion, assignment, retirement in grade or selection for sensitive or critical positions in the Armed Forces or Federal service.'

* * * * *

A0020–1a SAIG

SYSTEM NAME:

Inspector General Investigation Files.

SYSTEM LOCATION:

Primary location: Office of the U.S. Army Inspector General Agency, Headquarters, Department of the Army, 1700 Army Pentagon, Washington, DC 20310–1700.

Secondary location: Offices of Inspector General at major Army commands, field operating agencies, installations and activities, Army-wide. Official mailing addresses are published as an appendix to the Army's compilation of systems of records notices.

CATEGORIES OF INDIVIDUALS COVERED BY THE SYSTEM:

Any individual, military or civilian, against whom allegations of wrongdoing have been made related to violations of laws, rules, or regulations or to mismanagement, gross waste of funds, or abuse of authority, that have been reviewed or investigated.

CATEGORIES OF RECORDS IN THE SYSTEM:

Investigative case files containing investigative reports, such as,

preliminary inquiries and Reports of Investigation (ROIs), and administrative documents; and computer indices. ROIs include the authority for the inquiry/investigation, matters investigate, narrative, summaries/excerpts of testimony given by witnesses and appended exhibits that may include supporting documents, documentary evidence, summaries of interviews or transcripts of verbatim testimony, or other investigative information from Federal, State, and local investigative agencies and departments. Administrative documents in the files include those that guide or facilitate inquiry/investigative activities in the cases and provide the opening, transfer, or closing data for the cases. Computerized indices contain the names/subjects of the inquiry/investigation, opening and closing dates, codes for the type of allegations and their disposition, brief summaries of allegations, case notes, locations of the inquiries/investigations and the assigned case numbers.

AUTHORITY FOR MAINTENANCE OF THE SYSTEM:

10 U.S.C. 3013, Secretary of the Army; 10 U.S.C. 3014; 10 U.S.C. 3020; 10 U.S.C. 3065(a); Inspector General Act of 1978 (Pub L. 95-452), as amended.

PURPOSE(S):

To review and conduct non-criminal law enforcement inquiries/investigations into allegations of wrongdoing by Army personnel related to violations of laws, rules, or regulations or to mismanagement, gross waste of funds, or abuse of authority and report the results to the Office of the Secretary of Defense, the Department of Defense Inspector General, Office of the Secretary of the Army and Army officials, and to commanders so they may discharge their responsibilities under the Inspector General Act of 1978 for maintaining discipline, law, and order.

To provide detailed information necessary for the Secretary of Defense and Secretary of the Army, Army officials and commanders to direct further investigation, effect corrective personnel or other administrative action; to provide facts and evidence upon which to base prosecution; to provide information to other investigative elements of the Army, Department of Defense, other Federal. State, or local agencies having jurisdiction over the substance of the allegations or a related investigative interest; to provide information upon which determinations may be made for individuals' suitability for various personnel actions including but not limited to retention, promotion, assignment, retirement in grade or selection for sensitive or critical positions in the Armed Forces or Federal service.

ROUTINE USES OF RECORDS MAINTAINED IN THE SYSTEM, INCLUDING CATEGORIES OF USERS AND THE PURPOSES OF SUCH USES:

In addition to those disclosures generally permitted under 5 U.S.C. 552a(b) of the Privacy Act, these records or information contained therein may specifically be disclosed outside the DoD as a routine use pursuant to 5 U.S.C. 552a(b)(3) as follows:

The 'Blanket Routine Uses' set forth at the beginning of the Army's compilation of systems of records notices also apply to this system.

POLICIES AND PRACTICES FOR STORING, RETRIEVING, ACCESSING, RETAINING, AND DISPOSING OF RECORDS IN THE SYSTEM:

STORAGE:

Paper records in file folders; electronic storage media; CD-ROM.

RETRIEVABILITY:

By individual's full name and/or other descriptive information cross-referenced to the case number.

SAFEGUARDS:

Access is limited to authorized individuals having need for the records in the performance of their official duties. Paper files and CD-ROMs are stored in containers with locks, located in a locked room, in a secured building with controlled access. Computer indices are secured in locked rooms with limited/controlled access. Access to computerized information is controlled by a system of assigned passwords and available only to personnel responsible for system operation and maintenance.

RETENTION AND DISPOSAL:

Office of The Inspector General primary location of inquiry/investigative case files that contain allegations, that attract high public and/or Congressional Committee or Sub-Committee interest, or that are deemed to be historical significance by the Inspector General, are retained for 30 years, except that they may be offered to the National Archives after 25 years. Paper files are transferred to a Federal Records Center 2 years after completion of the inquiries/investigations and destroyed by burning upon completion of the transfer. The case files on CD-ROMs are erased by media being physically destroyed, unless retained permanently by the National Archives. Paper files of closed inquiry/investigative cases held by the secondary location Offices of The Inspector General are retained for up to 3 years, at the conclusion of which they are forwarded to the Office of The Inspector General system manager for optical scanning and retention as stated above.

SYSTEM MANAGER(S) AND ADDRESS:

Chief, Investigations Division, Office of the Inspector General, Headquarters, Department of the Army, 1700 Army Pentagon, Washington, DC 20310–1700.

NOTIFICATION PROCEDURE:

Individuals seeking to determine if information about themselves is contained in this system should address written inquiries to the Office of the Inspector General, Headquarters, Department of the Army, ATTN: Records Release Office, 1700 Army Pentagon, Washington, DC 20310–1700.

Individual should provide the full name, home address, telephone numbers and Army unit or activity to which assigned at the time of any Army Inspector General investigation, and a fee statement. Requests submitted on behalf of other persons must include their written, notarized or certified authorization.

RECORD ACCESS PROCEDURES:

Individuals seeking to determine if information about themselves is contained in this system should address written inquiries to the Office of the Inspector General, Headquarters, Department of the Army, ATTN: Records Release Office, 1700 Army Pentagon, Washington, DC 20310–1700.

Individual should provide the full name, home address, telephone numbers and Army unit or activity to which assigned at the time of any Army Inspector General investigation, and a fee statement. Requests submitted on behalf of other persons must include their written, notarized or certified authorization.

CONTESTING RECORD PROCEDURES:

The Army's rules for accessing records, and for contesting contents and appealing initial agency determinations are contained in Army Regulation 340–21; 32 CFR part 505; or may be obtained from the system manager.

RECORD SOURCE CATEGORIES:

From the individual, Army records and reports, and other sources providing or containing pertinent information.

EXEMPTIONS CLAIMED FOR THE SYSTEM:

Investigatory material compiled for law enforcement purposes may be exempt pursuant to 5 U.S.C. 552a(k)(2). However, if an individual is denied any

right, privilege, or benefit for which he would otherwise be entitled by Federal law or for which he would otherwise be eligible, as a result of the maintenance of such information, the individual will be provided access to such information except to the extent that disclosure would reveal the identity of a confidential source.

Investigatory material compiled solely for the purpose of determining suitability, eligibility, or qualifications for federal civilian employment, military service, federal contracts, or access to classified information may be exempt pursuant to 5 U.S.C. 552a(k)(5), but only to the extent that such material would reveal the identity of a confidential source.

An exemption rule for this system has been promulgated in accordance with requirements of 5 U.S.C. 553(b)(1), (2), and (3), (c) and (e) published in 32 CFR part 505. For additional information contact the system manager.

[FR Doc. 99–11741 Filed 5–10–99; 8:45 am]

BILLING CODE 5001–10–F

DEPARTMENT OF DEFENSE

Defense Logistics Agency

Privacy Act of 1974; System of Records

AGENCY: Defense Logistics Agency, DoD.

ACTION: Notice to amend record systems.

SUMMARY: The Defense Logistics Agency proposes to amend a system of records notice in its inventory of record systems subject to the Privacy Act of 1974 (5 U.S.C. 552a), as amended.

DATES: The amendment will be effective on June 10, 1999,unless comments are received that would result in a contrary determination.

ADDRESSES: Send comments to the Privacy Act Officer, Headquarters, Defense Logistics Agency, ATTN: CAAR, 8725 John J. Kingman Road, Suite 2533, Fort Belvior, VA 22060–6221.

FOR FURTHER INFORMATION CONTACT: Ms. Susan Salus at (703) 767–6183.

SUPPLEMENTARY INFORMATION: The Defense Logistics Agency's record system notices for records systems subject to the Privacy Act of 1974 (5 U.S.C. 552a), as amended, have been published in the **Federal Register** and are available from the address above.

The Defense Logistics Agency proposes to amend a system of records notice in its inventory of record systems subject to the Privacy Act of 1974 (5 U.S.C. 552a), as amended. The changes to the system of records are not within the purview of subsection (r) of the Privacy Act of 1974 (5 U.S.C. 552a), as amended, which requires the submission of new or altered systems report. The record system being amended ia set forth below, as amended, published in its entirety.

Dated: May 5, 1999.

L. M. Bynum,

Alternate OSD Federal Register Liaison Officer, Department of Defense.

S322.53 DMDC

SYSTEM NAME:

Defense Debt Collection Data Base *(June 25, 1996, 61 FR 32779).*

CHANGES:

* * * * *

SYSTEM LOCATION:

Delete entry and replace with 'Primary Location: Naval Postgraduate School Computer Center, Naval Postgraduate School, Monterey, CA 93943-5000.

Back-up location: Defense Manpower Data Center, DoD Center Monterey Bay, 400 Gigling Road, Seaside, CA 93955-6771.'

CATEGORIES OF INDIVIDUALS COVERED BY THE SYSTEM:

Delete entry and replace with 'Individuals who have been identified as being indebted to the United States Government to include all current, former, and reserve military personnel; deceased military personnel and their survivors; and DoD civilian employees.'

CATEGORIES OF RECORDS IN THE SYSTEM:

Add 'addresses and telephone numbers,' to entry.

AUTHORITY FOR MAINTENANCE OF THE SYSTEM:

Delete entry and replace with '10 U.S.C. 136, Under Secretary of Defense for Personnel and Readiness; E.O. 9397 (SSN); and Pub. L. 97–365, Debt Collection Act of 1982, as amended.'

* * * * *

ROUTINE USES OF RECORDS MAINTAINED IN THE SYSTEM, INCLUDING CATEGORIES OF USERS AND THE PURPOSES OF SUCH USES:

Delete paragraphs two, three, four, and five and replace with 'None'.

SAFEGUARDS:

Delete entry and replace with 'Access to personal information at both locations is restricted to those who require the records in the performance of their official duties. Access to personal information is further restricted by the use of passwords which are changed periodically. Physical entry is restricted by the use of locks, guards, and administrative procedures.'

* * * * *

S322.53 DMDC

SYSTEM NAME:

Defense Debt Collection Data Base.

SYSTEM LOCATION:

Primary Location: Naval Postgraduate School Computer Center, Naval Postgraduate School, Monterey, CA 93943-5000.

Back-up location: Defense Manpower Data Center, DoD Center Monterey Bay, 400 Gigling Road, Seaside, CA 93955-6771.

CATEGORIES OF INDIVIDUALS COVERED BY THE SYSTEM:

Individuals who have been identified as being indebted to the United States Government to include all current, former, and reserve military personnel; deceased military personnel and their survivors; and DoD civilian employees.

CATEGORIES OF RECORDS IN THE SYSTEM:

Computer records containing name, Social Security Number, addresses and telephone numbers, debt principal amount, interest and penalty amount (if any), debt reason, debt status, demographic information such as grade or rank, sex, date of birth, location, and various dates identifying the status changes occurring in the debt collection process.

AUTHORITY FOR MAINTENANCE OF THE SYSTEM:

10 U.S.C. 136, Under Secretary of Defense for Personnel and Readiness; E.O. 9397 (SSN); and Pub. L. 97–365, Debt Collection Act of 1982, as amended.

PURPOSE(S):

The purpose of the system of records is to provide the DoD with a central record of all debts and debtors either under current or past financial obligation to the United States Government to control and report on the debt collection process.

ROUTINE USES OF RECORDS MAINTAINED IN THE SYSTEM, INCLUDING CATEGORIES OF USERS AND THE PURPOSES OF SUCH USES:

In addition to those disclosures generally permitted under 5 U.S.C. 552a(b) of the Privacy Act, these records or information contained therein may specifically be disclosed outside the DoD as a routine use pursuant to 5 U.S.C. 552a(b)(3) as follows:

None.

POLICIES AND PRACTICES FOR STORING, RETRIEVING, ACCESSING, RETAINING, AND DISPOSING OF RECORDS IN THE SYSTEM:

STORAGE:

Records are stored on magnetic tape.

RETRIEVABILITY:

Records are retrieved by social security number and name from a computerized index.

SAFEGUARDS:

Access to personal information at both locations is restricted to those who require the records in the performance of their official duties. Access to personal information is further restricted by the use of passwords which are changed periodically. Physical entry is restricted by the use of locks, guards, and administrative procedures.

RETENTION AND DISPOSAL:

Disposition pending.

SYSTEM MANAGER(S) AND ADDRESS:

Deputy Director, Defense Manpower Data Center, DoD Center Monterey Bay, 400 Gigling Road, Seaside, CA 93955–6771.

NOTIFICATION PROCEDURE:

Individuals seeking to determine whether information about themselves is contained in this system should address written inquiries to the Privacy Act Officer, Defense Logistics Agency, ATTN: CAAR, 8725 John J. Kingman Road, Suite 2533, Fort Belvoir, VA 22060-6221.

Individuals are required to provide name, Social Security Number, and address. In addition, individuals must provide either a notarized signature or a signed and dated unsworn declaration in accordance with 28 U.S.C. 1746, stating under penalty of perjury under U.S. law that the information contained in their letter, including their identity, is true and correct.

RECORD ACCESS PROCEDURES:

Individuals seeking access to information about themselves contained in this system should address written inquiries to the Privacy Act Officer, Defense Logistics Agency, ATTN: CAAR, 8725 John J. Kingman Road, Suite 2533, Fort Belvoir, VA 22060-6221.

Individuals are required to provide name, Social Security Number, and address. In addition, individuals must provide either a notarized signature or a signed and dated unsworn declaration in accordance with 28 U.S.C. 1746, stating under penalty of perjury under U.S. law that the information contained in their letter, including their identity, is true and correct.

CONTESTING RECORD PROCEDURES:

The DLA rules for accessing records, for contesting contents and appealing initial agency determinations are contained in DLA Regulation 5400.21, 32 CFR part 323, or may be obtained from the Privacy Act Officer, Headquarters, Defense Logistics Agency, ATTN: CAAR, 8725 John J. Kingman Road, Suite 2533, Fort Belvoir, VA 22060–6221.

The record accuracy may also be contested through the administrative processes contained in Pub. L. 97–365, Debt Collection Act of 1982.

RECORD SOURCE CATEGORIES:

The military services and any other non-postal Federal agency.

EXEMPTIONS CLAIMED FOR THE SYSTEM:

None.

[FR Doc. 99–11744 Filed 5–10–99; 8:45 am]

BILLING CODE 5001–10–F

DEPARTMENT OF DEFENSE

Department of the Army

Corps of Engineers

Intent to Prepare a Draft Environmental Impact Statement for the Proposed Destination Broadwater Resort Facility, Located in Biloxi, Mississippi

AGENCY: Army Corps of Engineers, DoD.

ACTION: Notice of Intent.

SUMMARY: The Mobile District, U.S. Army Corps of Engineers (Corps), intends to prepare a Draft Environmental Impact Statement (DEIS) to address the potential impacts associated with the construction of the proposed Destination Broadwater resort facility to be located on the Mississippi Sound, in Biloxi, Mississippi. The Corps will be evaluating a permit application for the work under the authority of Section 10 of the Rivers and Harbors Act and section 404 of the Clean Water Act. The EIS will be used as a basis for the permit decision and to ensure compliance with the National Environmental Policy Act (NEPA).

FOR FURTHER INFORMATION CONTACT: Questions about the proposed action and the DEIS should be addressed to Mr. Bill Bunkley, Regulatory Branch, phone (334) 694–3780, or Dr. Susan Rees, Coastal Environment Section, phone (334) 694–4141, Mobile District, U.S. Army Corps of Engineers, PO Box 2288, Mobile, AL 36628.

SUPPLEMENTARY INFORMATION: 1. The permit applicant is proposing to construct a resort complex which includes a mixture of 6 dockside casinos, 12 hotels, various retail establishments, entertainment facilities, golf course, and 400-slip marina. The project is to be located at the existing Broadwater Resorts and President Casino site on Beach Boulevard (U.S. Highway 90) in Biloxi, Mississippi. The overall project site consists of approximately 325 acres which can be divided into two distinct functional areas: waterside development south of Highway 90 which will be used for dockside gaming and water-dependent activities, and landside development north of Highway 90 which will accommodate the non-gaming related activities. The waterside development encompasses an area of 134 acres extending approximately 4,100 feet into the Mississippi Sound. A man-made peninsula will be constructed to accommodate six floating casinos arranged around an embayment. Adjacent to each dockside casino will be a 500-room hotel and parking garage. A 400-slip marina is planned on the southernmost end of the project. The proposed landside development is located on approximately 47 acres north of Highway 90 currently occupied by the Broadwater Beach Resort and Broadwater Resort East hotels. The proposed redevelopment of this area includes the construction of 6 convention-oriented hotels (up to 3,250 rooms), a water recreation and amusement park, entertainment and retail areas. The existing 206-acre golf course will be redesigned and upgraded. The proposed work includes the placement of 684,000 cubic yards of dredged and fill material into the Mississippi Sound in order to convert 38.4 acres of water bottoms into land. Approximately 582,000 cubic yards of material will be dredged from the Mississippi Sound from an area covering approximately 52 acres. The proposed project will result in the filling or permanent shading of 66 acres of water bottoms, and filling 3.6 acres of isolated wetlands.

2. Alternatives to the applicant's proposal may exist which would reduce the impacts to the Mississippi Sound. These could include reducing the fill and dredge requirements by locating all non-water dependent facilities such as hotels to the landside development area, reducing the number of dockside casinos, alternate site layouts which may have less protrusion into the Sound, and possible alternate site locations.

3. Scoping:

a. The Corps invites full public participation to promote open

communication on the issues surrounding the proposal. All Federal, State, and local agencies, and other persons or organizations that have an interest are urged to participate in the NEPA scoping process. Public meetings will be held to help identify significant issues and to receive public input and comment.

b. The DEIS will analyze the potential social, economic, and environmental impacts to the local area resulting from the proposed project. Specifically, the following major issues will be analyzed in depth in the DEIS: hydrologic and hydraulic regimes, essential fish habitat and other marine habitat, air quality, cultural resources, wastewater treatment capacities and discharges, transportation systems, alternatives, secondary and cumulative impacts, socioeconomics, environmental justice (effect on minorities and low-income groups), and protection of children (Executive Order 13045).

c. The Corps will serve as the lead Federal agency in the preparation of the DEIS. It is anticipated that the following agencies will be invited and will accept cooperating agency status for the preparation of the DEIS: U.S. Environmental Protection Agency, U.S. Department of the Interior-Fish and Wildlife Service, U.S. Department of Commerce—National Marine Fisheries Service, U.S. Department of Transportation—Federal Highway Administration.

4. It is anticipated that the first scoping meeting will be held in the late May/early June time frame in the local area. Actual time and place for the meeting and subsequent meetings or workshops will be announced by the Mobile District by issuance of a Public Notice and/or local media.

5. It is anticipated that the DEIS will be made available for public review in August 1999.

Ronald A. Krizman,

Chief, Regulatory Branch.

[FR Doc. 99–11841 Filed 5–10–99; 8:45 am]

BILLING CODE 3710–CR–M

DEPARTMENT OF DEFENSE

Department of the Navy

Privacy Act of 1974; System of Records

AGENCY: Department of the Navy, DoD.

ACTION: Notice to Add Systems of Records.

SUMMARY: The Department of the Navy proposes to add three systems of records notices to its inventory of record systems subject to the Privacy Act of 1974 (5 U.S.C. 552a), as amended.

DATES: This action will be effective on June 10, 1999 unless comments are received that would result in a contrary determination.

ADDRESSES: Send comments to the Department of the Navy, PA/FOIA Policy Branch, Chief of Naval Operations (N09B30), 2000 Navy Pentagon, Washington, DC 20350–2000.

FOR FURTHER INFORMATION CONTACT: Mrs Doris Lama at (202) 685–6545 or DSN 325–6545.

SUPPLEMENTARY INFORMATION: The Department of the Navy's record system notices for records systems subject to the Privacy Act of 1974 (5 U.S.C. 552a), as amended, have been published in the **Federal Register** and are available from the address above.

The proposed systems report, as required by 5 U.S.C. 552a(r) of the Privacy Act was submitted on April 26, 1999, to the House Committee on Government Reform, the Senate Committee on Governmental Affairs, and the Office of Management and Budget (OMB) pursuant to paragraph 4c of Appendix I to OMB Circular No. A–130, 'Federal Agency Responsibilities for Maintaining Records About Individuals,' dated February 8, 1996, (61 FR 6427, February 20, 1996).

Dated: May 5, 1999.

L. M. Bynum,

Alternate OSD Federal Register Liaison Officer, Department of Defense.

N017252–2

SYSTEM NAME:

Transitional Compensation for Abused Dependents.

SYSTEM LOCATION:

Navy Personnel Command (NPC–661D), 5720 Integrity Drive, Millington, TN 38055–6610 and the Director, Defense Finance and Accounting Service, Cleveland Center, 1240 East 9th Street, Cleveland, OH 44199–2055.

CATEGORIES OF INDIVIDUALS COVERED BY THE SYSTEM:

Abused dependents who receive transitional compensation.

CATEGORIES OF RECORDS IN THE SYSTEM:

DD Form 2698, Application for Transitional Compensation; computation sheets; payment schedule; case processing record; direct-deposit form; annual certification form; correspondence to and from the Defense Finance and Accounting Service (DFAS).

AUTHORITY FOR MAINTENANCE OF THE SYSTEM:

5 U.S.C. 301, Departmental Regulations; 10 U.S.C. Sections 801–940, 860(c), 1059, 1077, and 1408(b); 38 U.S.C. 1311 and 1313; E.O. 9397 (SSN); and DoD Instruction 1342.24, Transitional Compensation for Abused Dependents.

PURPOSE(S):

To coordinate requests for transitional compensation, to approve requests and forward them to DFAS, and to notify DFAS of any action that affects payment of transitional compensation.

ROUTINE USES OF RECORDS MAINTAINED IN THE SYSTEM, INCLUDING CATEGORIES OF USERS AND THE PURPOSES OF SUCH USES:

In addition to those disclosures generally permitted under 5 U.S.C. 552a(b) of the Privacy Act, these records or information contained therein may specifically be disclosed outside the DoD as a routine use pursuant to 5 U.S.C. 552a(b)(3) as follows:

The 'Blanket Routine Uses' that appear at the beginning of the Navy's compilation of systems of records notices also apply to this system.

POLICIES AND PRACTICES FOR STORING, RETRIEVING, ACCESSING, RETAINING, AND DISPOSING OF RECORDS IN THE SYSTEM:

STORAGE:

Paper and automated records.

RETRIEVABILITY:

Name and Social Security Number.

SAFEGUARDS:

These files are highly sensitive and must be protected from unauthorized disclosure. While records may be maintained in various kinds of filing equipment, specific emphasis is given to ensuring that the equipment areas are monitored or have controlled access. Information maintained on the computer is password protected. Computer terminals are located in supervised areas with an access controlled system.

RETENTION AND DISPOSAL:

Department of the Navy records are destroyed when three years old.

Defense Finance and Accounting Service records are retained at DFAS-Cleveland until member is discharged or retires, then transferred to nearest Federal Records Center.

SYSTEM MANAGER(S) AND ADDRESS:

Navy Personnel Command (NPC–661D), 5720 Integrity Drive, Millington, TN 38055–6610.

Director, Defense Finance and Accounting Service-Cleveland Center, 1240 East 9th Street, Cleveland, OH 44199–2055.

NOTIFICATION PROCEDURE:

Individuals seeking to determine whether information about themselves is contained in this system should address written inquiries to the Navy Personnel Command (NPC–661D), 5720 Integrity Drive, Millington, TN 38055–6610 or to the Director, Defense Finance and Accounting Service-Cleveland Center, 1240 East 9th Street, Cleveland, OH 44199–2055.

Request should contain full name and Social Security Number of the individual.

RECORD ACCESS PROCEDURES:

Individuals seeking access to records about themselves contained in this system of records should address written inquiries to the Navy Personnel Command (NPC–661D), 5720 Integrity Drive, Millington TN 38055–661 or the Director, Defense Finance and Accounting Service-Cleveland Center, 1240 East 9th Street, Cleveland, OH 44199–2055.

Request should contain full name and Social Security Number of the individual.

CONTESTING RECORD PROCEDURES:

The Navy's rules for accessing records, and for contesting contents and appealing initial agency determinations are published in Secretary of the Navy Instruction 5211.5; 32 CFR part 701, or may be obtained from the system manager.

RECORD SOURCE CATEGORIES:

Individual; military personnel record file.

EXEMPTIONS CLAIMED FOR THE SYSTEM:

None.

NO1752–3

SYSTEM NAME:

Child Sexual Abuse (CSA) Case Management System.

SYSTEM LOCATION:

Navy Personnel Command (NPC–661 and NPC–8) 5720 Integrity Drive, Millington, TN 38055–6610.

CATEGORIES OF INDIVIDUALS COVERED BY THE SYSTEM:

Navy active duty personnel alleged to have committed or been involved with Child Sexual Abuse (CSA) cases.

CATEGORIES OF RECORDS IN THE SYSTEM:

Alleged offender's name, Social Security Number, date of birth, rank, military address, year(s) of alleged incident, expiration of active obligated service, projected rotation date, number of victims, notes, case determination, case number, subsequent reviews.

AUTHORITY FOR MAINTENANCE OF THE SYSTEM:

5 U.S.C. 301, Departmental Regulations and E.O. 9397 (SSN) and OPNAV Instruction 1752.2A.

PURPOSE(S):

To maintain copies of all reported Child Sexual Abuse (CSA) cases and maintain a computerized data base of alleged CSA offenders for use in tracking the individual, collecting statistics, conducting research studies, complying with Child Protective Service requirements at state and local levels, and assisting in the development of CSA program policy issues.

ROUTINE USES OF RECORDS MAINTAINED IN THE SYSTEM, INCLUDING CATEGORIES OF USERS AND THE PURPOSES OF SUCH USES:

In addition to those disclosures generally permitted under 5 U.S.C. 552a(b) of the Privacy Act, these records or information contained therein may specifically be disclosed outside DoD as a routine use pursuant to 5 U.S.C.a(b)(3) as follows:

To Federal, state, or local government agencies when it is deemed appropriate to utilize civilian resources in the counseling and treatment of individuals or families involved in abuse or neglect; or when it is deemed appropriate or necessary to refer a case to civilian authorities for civil or criminal law enforcement.

To officials and employees of Federal, state, and local governments and agencies when required by law and/or regulation in furtherance of local communicable disease control, family abuse prevention programs, preventive medicine and safety programs, and other public health and welfare programs.

To officials and employees of local and state governments and agencies in the performance of their official duties relating to professional certification, licensing, and accreditation of health case providers.

To law enforcement officials to protect the life and welfare of third parties. This release will be limited to necessary information. Consultation with the hospital or regional judge advocate is advised.

To 'Blanket Routine Uses' that appear at the beginning of the Navy's compilation of systems notices also apply to this system.

POLICIES AND PRACTICES FOR STORING, RETRIEVING, ACCESSING, RETAINING, AND DISPOSING OF RECORDS IN THE SYSTEM:

STORAGE:

Paper and automated records.

RETRIEVABILITY:

Name and Social Security Number.

SAFEGUARDS:

These files are highly sensitive and must be protected from unauthorized disclosure. While records may be maintained in various kinds of filing equipment, specific emphasis is given to ensuring that the equipment areas are monitored or have controlled access. Information maintained on the computer is password protected. Computer terminals are located in supervised areas with an access controlled system.

RETENTION AND DISPOSAL:

Closed records will be maintained on site for a period of four years, after which they will be retired to the National Personnel Records Center, 9700 Page Avenue, St. Louis, MO 63132–5100 and held for a period of 50 years.

SYSTEM MANAGER(S) AND ADDRESS:

Navy Personnel Command (NPC–661D and NPC–8), 5720 Integrity Drive, Millington, TN 38055–6610.

NOTIFICATION PROCEDURE:

Individuals seeking to determine whether information about themselves is contained in this system should address written inquiries to the Navy Personnel Command (NPC–661 and 8), 5720 Integrity Drive, Millington, TN 38055–6610.

Request should contain full name and Social Security Number of the individual and be signed.

RECORD ACCESS PROCEDURES:

Individuals seeking access to records about themselves contained in this system of records should address written inquiries to the Navy Personnel Command (NPC–661 and 8), 5720 Integrity Drive, Millington, TN 38055–6610.

Request should contain full name and Social Security Number of the individual and be signed.

CONTESTING RECORD PROCEDURES:

The Navy's rules for accessing records, and for contesting contents and appealing initial agency determinations are published in Secretary of the Navy Instruction 5211.5; 32 CFR part 701, or may be obtained from the system manager.

RECORD SOURCE CATEGORIES:

Family advocacy files.

EXEMPTIONS CLAIMED FOR THE SYSTEM:

None.

N12410–1

SYSTEM NAME:

MWR Training Student Database.

SYSTEM LOCATION:

Navy Personnel Command (NPC–654), 5720 Integrity Drive, Millington, TN 38055–6540.

CATEGORIES OF INDIVIDUALS COVERED BY THE SYSTEM:

Civilian and military employees attached to nonappropriated fund activities under the Commander, Navy Personnel Command and the Commandant of the Marine Corps.

CATEGORIES OF RECORDS IN THE SYSTEM:

Training records pertaining to the enrollment and completion status of persons attending Morale Welfare and Recreation (MWR) related training provided through the Navy Personnel Command.

AUTHORITY FOR MAINTENANCE OF THE SYSTEM:

5 U.S.C. 301, Departmental Regulations and E.O. 9397 (SSN).

PURPOSE(S):

To manage, supervise, and administer the centrally managed MWR training program for civilian and military employees attached to nonappropriated fund activities under the Commander, Navy Personnel Command and Commandant of the Marine Corps. This includes providing information to supervisors on their employee's training and providing a record of Continuing Education Credits earned.

ROUTINE USES OF RECORDS MAINTAINED IN THE SYSTEM, INCLUDING CATEGORIES OF USERS AND THE PURPOSES OF SUCH USES:

In addition to those disclosures generally permitted under 5 U.S.C. 552a(b) of the Privacy Act, these records or information contained therein may specifically be disclosed outside the DoD as a routine use pursuant to 5 U.S.C. 552a(b)(3) as follows:

The ''Blanket Routine Uses'' that appear at the beginning of the Navy and Marine Corps' compilation of systems notices also apply to this system.

POLICIES AND PRACTICES FOR STORING, RETRIEVING, ACCESSING, RETAINING, AND DISPOSING OF RECORDS IN THE SYSTEM:

STORAGE:

Automated and manual records.

RETRIEVABILITY:

Name, Social Security Number, class, and/or date of training.

SAFEGUARDS:

Computer processing facilities are located in restricted areas accessible only to authorized persons that are properly screened, cleared, and trained. Manual records are computer printouts are only available to authorized personnel having a need to know. Access to individual computers is password protected. Access to the database is limited to NPC–654 personnel with a need to know. Each user has an individual password for access to the database.

RETENTION AND DISPOSAL:

Destroy 3 years after completion of the annual period or when no longer required for activity review and/or analysis, whichever is later.

SYSTEM MANAGER(S) AND ADDRESS:

Navy Personnel Command, 5720 Integrity Drive, Millington, TN 38055–6610.

NOTIFICATION PROCEDURE:

Individuals seeking to determine whether information about themselves is contained in this system should address written inquiries to the Navy Personnel Command (NPC–654), 5720 Integrity Drive, Millington, TN 38055–6540.

Request should contain full name, Social Security Number, activity at which employed/attached, and signature of the requester.

The individual may visit the Navy Personnel Command (NPC–654), located in the Lassen Building, at 7736 Kitty Hawk Avenue, Millington, TN 38055–6540, for assistance with records located in that building.

RECORD ACCESS PROCEDURES:

Individuals seeking access to records about themselves contained in this system of records should address written inquiries to the Navy Personnel Command (NPC–654), 5720 Integrity Drive, Millington, TN 38055–6540.

Request should contain full name, Social Security Number, activity at which employed/attached, and signature of the requester.

The individual may visit the Navy Personnel Command (NPC–654), located in the Lassen Building, at 7736 Kitty Hawk Avenue, Millington, TN 38055–6540, for assistance with records located in that building.

CONTESTING RECORD PROCEDURES:

The Navy's rules for accessing records, and for contesting contents and appealing initial agency determinations are published in Secretary of the Navy Instruction 5211.5; 32 CFR part 701, or may be obtained from the system manager.

RECORD SOURCE CATEGORIES:

Individual and local activity where assigned.

EXEMPTIONS CLAIMED FOR THE SYSTEM:

None.

[FR Doc. 99–11742 Filed 5–10–99; 8:45 am]

BILLING CODE 5001–10–M

DEPARTMENT OF DEFENSE

Department of the Navy

Privacy Act of 1974; System of Records

AGENCY: Department of the Navy, DoD.

ACTION: Notice to alter a system of records.

SUMMARY: The Department of the Navy proposes to alter a system of records notice in its inventory of record systems subject to the Privacy Act of 1974 (5 U.S.C. 552a), as amended. The alteration expands the category of individuals covered in N05100-1, entitled 'Diving Log' from 'Naval personnel' to 'DoD and U.S. Coast Guard personnel'.

DATES: This action will be effective on June 10, 1999, unless comments are received that would result in a contrary determination.

ADDRESSES: Send comments to the Department of the Navy, PA/FOIA Policy Branch, Chief of Naval Operations (N09B30), 2000 Navy Pentagon, Washington, DC 20350–2000.

FOR FURTHER INFORMATION CONTACT: Mrs. Doris Lama at (202) 685–6545 or DSN 325–6545.

SUPPLEMENTARY INFORMATION: The Department of the Navy's record system notices for records systems subject to the Privacy Act of 1974 (5 U.S.C. 552a), as amended, have been published in the **Federal Register** and are available from the address above.

The proposed system report, as required by 5 U.S.C. 552a(r) of the Privacy Act was submitted on April 26, 1999, to the House Committee on Government Reform, the Senate Committee on Governmental Affairs, and the Office of Management and Budget (OMB) pursuant to paragraph 4c of Appendix I to OMB Circular No. A–130, 'Federal Agency Responsibilities for Maintaining Records About Individuals,' dated February 8, 1996, (61 FR 6427, February 20, 1996).

Dated: May 5, 1999.

L. M. Bynum,

Alternate OSD Federal Register Liaison Officer, Department of Defense.

N05100–1

SYSTEM NAME:

Diving Log *(February 22, 1993, 58 FR 10746).*

CHANGES:

* * * * *

CATEGORIES OF INDIVIDUALS COVERED BY THE SYSTEM:

Delete entry and replace with 'DoD and Coast Guard military and civilian employees who are involved in diving or who have been exposed to a hyperbaric environment.'

* * * * *

PURPOSE(S):

Delete entry and replace with 'To furnish the commanding officer with a summarized diving report for individuals attached to the unit and to monitor types of dives, equipment usage, and mishap trends.

To evaluate the diving program of DoD and Coast Guard components. Pertinent individual records and/or statistical summaries prepared by Naval Safety Center analysts are also provided to all reporting echelons having a responsibility for the diving program and to the Navy Personnel Command, Bureau of Medicine and Surgery, Naval Audit Service, or other activities having responsibility for the administration or control of personnel assignments and hazardous duty payments.'

* * * * *

N05100–1

SYSTEM NAME:

Diving Log.

SYSTEM LOCATION:

Naval Safety Center, 375 A Street, Norfolk, VA 23511–4399.

CATEGORIES OF INDIVIDUALS COVERED BY THE SYSTEM:

DoD and Coast Guard military and civilian employees who are involved in diving or who have been exposed to a hyperbaric environment.

CATEGORIES OF RECORDS IN THE SYSTEM:

Diving Log Report.

AUTHORITY FOR MAINTENANCE OF THE SYSTEM:

5 U.S.C. 301, Departmental Regulations and E.O. 9397 (SSN).

PURPOSE(S):

To furnish the commanding officer with a summarized diving report for individuals attached to the unit and to monitor types of dives, equipment usage, and mishap trends.

To evaluate the diving program of DoD and Coast Guard components. Pertinent individual records and/or statistical summaries prepared by Naval Safety Center analysts are also provided to all reporting echelons having a responsibility for the diving program and to the Navy Personnel Command, Bureau of Medicine and Surgery, Naval Audit Service, or other activities having responsibility for the administration or control of personnel assignments and hazardous duty payments.

ROUTINE USES OF RECORDS MAINTAINED IN THE SYSTEM, INCLUDING CATEGORIES OF USERS AND THE PURPOSES OF SUCH USES:

In addition to those disclosures generally permitted under 5 U.S.C. 552a(b) of the Privacy Act, these records or information contained therein may specifically be disclosed outside the DoD as a routine use pursuant to 5 U.S.C. 552a(b)(3) as follows:

The 'Blanket Routine Uses' that appear at the beginning of the Navy's compilation of systems of records apply to this system.

POLICIES AND PRACTICES FOR STORING, RETRIEVING, ACCESSING, RETAINING, AND DISPOSING OF RECORDS IN THE SYSTEM:

STORAGE:

Magnetic tape.

RETRIEVABILITY:

Records may be selected based on any of the data elements contained in the file such as diver's name, Social Security Number, organization unit, type of dive and equipment used.

SAFEGUARDS:

A limited number of data processing personnel have access to the computer facility and to the magnetic tape files and computer programs. All requests for information received from activities or for purposes not directly related to the diving program must be approved by the Commander, Naval Safety Center or his designated representative.

RETENTION AND DISPOSAL:

Permanent. Magnetic tape files contain all available records and are never purged. Reports are not transferred to a records center.

SYSTEM MANAGER(S) AND ADDRESS:

Director of Afloat Safety Programs, Naval Safety Center, 375 A Street, Norfolk, VA 23511–4399, Norfolk, VA 23511–5796.

NOTIFICATION PROCEDURE:

Individuals seeking to determine whether this system of records contains information about themselves should address written inquiries to the Director of Afloat Safety Programs, Naval Safety Center, 375 A Street, Norfolk, VA 23511–4399.

Requests should contain full name, address, military status and Social Security Number in order to determine if the system contains any records pertaining to them. Personal visitors will be required to produce military or comparable civilian identification cards.

RECORD ACCESS PROCEDURES:

Individuals seeking access to records about themselves contained in this system of records should address written inquiries to Director of Afloat Safety Programs, Naval Safety Center, 375 A Street, Norfolk, VA 23511–4399.

Requests should contain full name, address, military status and Social Security Number in order to determine if the system contains any records pertaining to them. Personal visitors will be required to produce military or comparable civilian identification cards.

CONTESTING RECORD PROCEDURES:

The Navy's rules for accessing records, and for contesting contents and appealing initial agency determinations are published in Secretary of the Navy Instruction 5211.5; 32 CFR part 701; or may be obtained from the system manager.

RECORD SOURCE CATEGORIES:

Commanding Officers of DoD and U.S. Coast Guard units conducting diving or hyperbaric exposure incident to diving.

EXEMPTIONS CLAIMED FOR THE SYSTEM:

None.

[FR Doc. 99–11743 Filed 5–10–99; 8:45 am]

BILLING CODE 5001–10–F

DEPARTMENT OF ENERGY

[Docket No. EA–207]

Application To Export Electric Energy; PDI New England, Inc.

AGENCY: Office of Fossil Energy, DOE.

ACTION: Notice of application.

SUMMARY: PDI New England, Inc. (PDI) has applied for authority to transmit electric energy from the United States to Canada pursuant to section 202(e) of the Federal Power Act.

DATES: Comments, protests or requests to intervene must be submitted on or before May 26, 1999.

ADDRESSES: Comments, protests or requests to intervene should be addressed as follows: Office of Coal & Power Im/Ex (FE–27), Office of Fossil Energy, U.S. Department of Energy, 1000 Independence Avenue, SW, Washington, DC 20585–0350 (FAX 202–287–5736).

FOR FURTHER INFORMATION CONTACT: Steven Mintz (Program Office) 202–586–9506 or Michael Skinker (Program Attorney) 202–586–6667.

SUPPLEMENTARY INFORMATION: Exports of electricity from the United States to a foreign country are regulated and require authorization under section 202(e) of the Federal Power Act (FPA) (16 U.S.C. § 824a(e)).

On March 29, 1999, the Office of Fossil Energy (FE) of the Department of Energy (DOE) received an application from PDI for authorization to export electric energy to Canada. PDI is a wholly-owned subsidiary of WPS Power Development, Inc. which, in turn, is a wholly-owned indirect subsidiary of WPS Resources Corporation. WPS Resources Corporation is an exempt public utility holding company headquartered in Green Bay, Wisconsin.

PDI and its affiliate, PDI Canada, Inc., is in the process of acquiring certain generating assets that are being divested from Maine Public Service Company (MPS). As part of the forthcoming transaction with MPS, PDI Canada, Inc., will be providing energy to a wholesale customer in the Province of New Brunswick, Canada. PDI may be called upon from time to time to provide backup power to its affiliate, PDI Canada, Inc., to service the contract. Providing such backup power would constitute an export of electricity from the United States to Canada.

The energy to be exported by PDI will be surplus generation produced from the MPS generating assets that will soon be acquired by PDI and PDI Canada, Inc. PDI intends to export to Canada using the existing international transmission facilities owned by MPS. The construction of each of the international transmission facilities to be utilized by PDI, as more fully described in the application, has previously been authorized by a Presidential permit issued pursuant to Executive Order 10485, as amended.

Procedural Matters

Any person desiring to become a party to this proceeding or to be heard by filing comments or protests to this application should file a petition to intervene, comment or protest at the address provided above in accordance with §§ 385.211 or 385.214 of the FERC's Rules of Practice and Procedures (18 CFR 385.211, 385.214). Fifteen copies of each petition and protest should be filed with the DOE on or before the date listed above.

Comments on the PDI application to export electric energy to Canada should be clearly marked with Docket EA–207. Additional copies are to be filed directly with Gerald L. Mroczkowski, Vice President, PDI New England, Inc., 677 Baeten Road, Green Bay, Wisconsin 54304 *AND* Bradley D. Jackson, Foley & Lardner, 150 East Gilman Street, Madison, Wisconsin 53703–1441.

A final decision will be made on this application after the environmental impacts have been evaluated pursuant to the National Environmental Policy Act of 1969 and a determination is made by the DOE that the proposed action will not adversely impact on the reliability of the U.S. electric power supply system.

Copies of this application will be made available, upon request, for public inspection and copying at the address provided above or by accessing the Fossil Energy Home Page at http://www.fe.doe.gov. Upon reaching the Fossil Energy Home page, select ''Regulatory,'' then ''Electricity,'' and then ''Pending Proceedings'' from the options menus.

DOE has granted the applicant's request for an expedited notice and comment period of fifteen (15) days so that PDI might be able to export electric energy to Canada, if called upon, by June 8, 1999.

Issued in Washington, DC, on May 5, 1999.

Anthony J. Como,

Manager, Electric Power Regulation, Office of Coal & Power Im/Ex, Office of Coal & Power Systems, Office of Fossil Energy.

[FR Doc. 99–11865 Filed 5–10–99; 8:45 am]

BILLING CODE 6450–01–P

DEPARTMENT OF ENERGY

Federal Energy Regulatory Commission

Notice of As-Built Exhibit A, F, and G and Soliciting Comments, Motions to Intervene, and Protests

May 5, 1999.

a. *Application Type:* As-Built Exhibits A, F, and G.

b. *Project No:* 5876–038.

c. *Date Filed:* July 30 and August 19, 1993, and April 19, 1999.

d. *Applicant:* Alice Falls Corporation.

e. *Name of Project:* Alice Falls Project.

f. *Location:* On the Ausable River in Clinton and Essex Counties, New York. The project does not utilize any federal or tribal lands.

g. *Filed Pursuant to:* Federal Power Act, 16 U.S.C. § 791(a)–825(r).

h. *Applicant Contact:* Mr. David Crandell, Mercer Management, Inc., 330 Broadway, Albany, NY 12207–2981, (518) 434–1412.

i. *FERC Contact:* Any questions on this notice should be addressed to Paul Shannon at (202) 219–2866 or by e-mail at paul.shannon@ferc.fed.us.

j. *Deadline for filing comments and/or motions:* June 14, 1999.

All documents (original and eight copies) should be filed with: David P. Boergers, Secretary, Federal Energy Regulatory Commission, 888 First Street, N.E., Washington, D.C. 20426.

Please include the project number (5867–038) on any comments or motions filed.

k. *Descritpion of Filing:* Alice Falls Corporation filed as-built exhibits describing the constructed project features and project boundary. The license authorized the installation of a 400-foot-long transmission line from the powerhouse to a NYSEG overhead transmission line on New York State Route 9. Instead, the licensee installed a 1,500-foot-long underground transmission line that ties into a NYSEG overhead transmission line north of Old State Road. The as-built exhibits revise the project boundary to include the underground transmission line. Also, the as-built exhibits indicate the total capacity of the project's two generating units is 2,100 kW. The licensed units are authorized to have a total capacity of 1,942 kW. The licensee indicates the project's maximum hydraulic capacity remains as licensed at 840 cfs.

l. *Locations of the Application:* A copy of the application is available for inspection and reproduction at the Commission's Public Reference Room, located at 888 First Street, N.E., Room 2A, Washington, D.C. 20426, or by calling (202) 208–1371. This filing may be viewed on http://www.ferc.fed.us/online/rims.htm (call (202) 208–2222 for assistance). A copy is also available for inspection and reproduction at the address in item h above.

m. Individuals desiring to be included on the Commission's mailing list should so indicate by writing to the Secretary of the Commission.

Comments, Protests, or Motions to Intervene—Anyone may submit comments, a protest, or a motion to intervene in accordance with the requirements of Rules of Practice and Procedure, 18 CFR 385.210, .211 and .214. In determining the appropriate action to take, the Commission will consider all protests or other comments filed, but only those who file a motion to intervene in accordance with the Commission's Rules may become a party to the proceeding. Any comments, protests, or motions to intervene must be received on or before the specified comment date for the particular application.

Filing and Service of Responsive Documents—Any filings must bear in all capital letters the title ''COMMENTS'', ''RECOMMENDATIONS FOR TERMS AND CONDITIONS'', ''PROTEST'', OR

''MOTION TO INTERVENE'', as applicable, and the Project Number of the particular application to which the filing refers. Any of the above-named documents must be filed by providing the original and the number of copies provided by the Commission's regulations to: The Secretary at the above-mentioned address. A copy of any motion to intervene must also be served upon each representative of the Applicant specified in the particular application.

Agency Comments—Federal, state, and local agencies are invited to file comments on the described application. A copy of the application may be obtained by agencies directly from the Applicant. If an agency does not file comments within the time specified for filing comments, it will be presumed to have no comments. One copy of an agency's comments must also be sent to the Applicant's representatives.

Linwood A. Watson, Jr.,

Acting Secretary.

[FR Doc. 99–11765 Filed 5–10–99; 8:45 am]

BILLING CODE 6717–01–M

DEPARTMENT OF ENERGY

Federal Energy Regulatory Commission

Notice of Transfer of License and Soliciting Comments, Motions to Intervene, and Protests

May 5, 1999.

Take notice that the following application has been filed with the Commission and is available for public inspection:

a. *Application Type:* Transfer of License.

b. *Project No:* 2280–004.

c. *Date Filed:* April 1, 1999.

d. *Applicants:* Cleveland Electric Illuminating Company (CEI) and Pennsylvania Electric Company (Penelec).

e. *Name of Project:* Seneca Pumped Storage Station.

f. *Location:* On the Allegheny River in Warren County, Pennsylvania, at the U.S. Army Corps of Engineers Kinzua Dam and Reservoir. The project occupies federal lands within Allegheny National Forest

g. *Filed Pursuant to:* Federal Power Act, 16 U.S.C. Section 8.

h. *Applicant Contact:* For CEI: Brian J. McManus, Jones Day, Reavis & Pogue, 1450 G Street, N.W., Washington, DC 20005–2008 (202) 879–5452. For Penelec: Mr. William J. Madden, Jr., Winston & Strawn, 1400 L Street, N.W., Washington, DC 20012 (202) 371–5700.

i. *FERC Contact:* Any questions on this notice should be addressed to James Hunter at (202) 219–2839 or by e-mail address: james.hunter@ferc.fed.us.

j. *Deadline for filing comments and or motions:* June 9, 1999.

All documents (original and eight copies) should be filed with: David P. Boergers, Secretary, Federal Energy Regulatory Commission, 888 First Street, N.E., Washington, D.C. 20426.

Please include the project number (P–2280–004) on any comments or motions filed.

k. *Descritpion of Proposal:* CEI and Penelec, currently co-licensees of the project, propose to transfer Penelec's 20 percent interest in the project to CEI.

l. *Locations of the Application:* A copy of the application is available for inspection and reproduction at the Commission's Public Reference Room, located at 888 First Street, NE, Room 2A, Washington, DC 20426, or by calling (202) 208–1371. The application viewed on the web at http://www.ferc.fed.us/online/rims.htm (call (202) 208–2222 for assistance). A copy is also available for inspection and reproduction at the address in item h above.

m. Individuals desiring to be included on the Commission's mailing list should so indicate by writing to the Secretary of the Commission.

Comments, Protests, or Motions to Intervene—Anyone may submit comments, a protest, or a motion to intervene in accordance with the requirements of Rules of Practice and Procedure, 18 CFR 385.210, .211 and .214. In determining the appropriate action to take, the Commission will consider all protests or other comments filed, but only those who file a motion to intervene in accordance with the Commission's Rules may become a party to the proceeding. Any comments, protests, or motions to intervene must be received on or before the specified comments date for the particular application.

Filing and Service of Responsive Documents—Any filings must bear in all capital letters the title ''COMMENTS'', ''RECOMMENDATIONS FOR TERMS AND CONDITIONS'', ''PROTEST'', OR ''MOTION TO INTERVENE'', as applicable, and the Project Number of the particular application to which the filing refers. Any of the above-named documents must be filed by providing the original and the number of copies provided by the Commission's regulations to: The Secretary at the above-mentioned address. A copy of any motion to intervene must also be served upon each representative of the Applicant specified in the particular application.

Agency Comments—Federal, state, and local agencies are invited to file comments on the described application. A copy of the application may be obtained by agencies directly from the Applicant. If an agency does not file comments within the time specified for filing comments, it will be presumed to have no comments. One copy of an agency's comments must also be sent to the Applicant's representatives.

Linwood A. Watson, Jr.,

Acting Secretary.

[FR Doc. 99–11763 Filed 5–10–99; 8:45 am]

BILLING CODE 6717–01–M

DEPARTMENT OF ENERGY

Federal Energy Regulatory Commission

[Docket No. RP98–310–005]

Natural Gas Pipeline Company of America; Notice of Compliance Filing

May 5, 1999.

Take notice that on April 30, 1999, Natural Gas Pipeline Company of American (Natural) tendered for filing certain tariff sheets to be part of its FERC Gas Tariff, Sixth Revised Volume No. 1, to be effective August 1, 1998 and January 1, 1999.

Natural states that the filing is submitted pursuant to the Federal Energy Regulatory Commision's (Commission) order issued February 11, 1999 in Docket Nos. RP98–310–001 and 002, and OPR Letter Order issued April 20, 1999 in Docket No. RP98–310–003. Also, effective August 1, 1998, Natural made conforming changes to its Rate Schedule PALS to reflect provisions previously approved in Docket No. RP98–310 in Natural's form of service agreement.

Natural's Rate Schedule PALS was previously approved in Docket No. RP98–145.

In addition, Natural made conforming changes to the tariff sheets submitted to be effective January 1, 1999 to reflect provisions previously approved in Docket Nos. RP99–176–000 and 001.

Natural requests any waivers that may be required to permit the tendered tariff sheets to become effective August 1, 1998 and January 1, 999, consistent with the Commission's orders issued July 30, 1998, December 30, 1998, February 11, 1999, and the OPR Letter Order issued April 20, 1999, in Docket Nos. RP98–310–000, RP99–176–000, RP98–310–001 and 002, and RP 98–310–003, respectively.

Natural states that copies of the filing have been mailed to its customers, interested state regulatory agencies and all parties set out on the Commision's official service list in Docket No. RP98–310.

Any person desiring to protest this filing should file a protest with the Federal Energy Regulatory Commission, 888 First Street, NE, Washington, DC 20426, in accordance with section 385.211 Commission and Regulations. All such protests must be filed as provided in section 154.210 of the Commission's Regulations. Protests will be considered by the Commission in determining the appropriate action to be taken, but will not serve to make protestants parties to the proceedings. Copies of this filing are on file with the Commission and are available for public inspection in the Public Reference Room. This filing may be viewed on the web at http://www.ferc.fed.us/online/rims.htm (call 202–208–2222 for assistance).

Linwood A. Watson, Jr.

Acting Secretary.

[FR Doc. 99–11766 Filed 5–10–99; 8:45 am]

BILLING CODE 6717–01–M

DEPARTMENT OF ENERGY

Federal Energy Regulatory Commission

[Docket No. CP99–380–000]

Williams Gas Pipelines Central, Inc.; Notice of Request Under Blanket Authorization

May 5, 1999.

Take notice that on April 29, 1999, Williams Gas Pipelines Central, Inc. (WNG), P.O. Box 3288, Tulsa, Oklahoma 74101, filed a request with the Commission in Docket No. CP99–380–000, pursuant to Section 157.205 and 157.216 (b) of the Requestions under the Natural Gas Act (NGA) for authorization to abandon by reclaim facilities used for the receipt of gas from 1988 C.R.C. E.P.P. (CRCEPP), in Rice County, Kansas, under the blanket authorization issued in Docket No. CP82–479–000, all as more fully set forth in the request on file with the Commission and open to public inspection. ''This filing may be viewed on the web at http://www.ferc.fed.us/online/rims.htm (call 202–208–2222 for assistance).

WNG states that the setting has been inactive since March 1998 and that CRCEPP has removed its facilities from the site.

Any person or the Commission's staff may, within 45 days after issuance of the instant notice by the Commission, file pursuant to rule 214 of the Commission's Procedural Rules (18 CFR 385.214) a motion to intervene or notice of intervention and pursuant to section 157.205 of the Regulations under the Natural Gas Act (18 CFR 157.205) a protest to the request. If no protest is filed within the time allowed therefore, the proposed activity shall be deemed to be authorized effective the day after the time allowed for filing a protest. If a protest is filed and not withdrawn within 30 days after the time allowed for filing a protest, the instant request shall be treated as an application for authorization pursuant to Section 7 of the Natural Gas Act.

Linwood A. Watson, Jr.,

Acting Secretary.

[FR Doc. 99–11760 Filed 5–10–99; 8:45 am]

BILLING CODE 6717–01–M

DEPARTMENT OF ENERGY

Federal Energy Regulatory Commission

[Project Nos. 2692–018, 2686–018, & 2698–016]

Nantahala Power & Light Company; Notice of Availability of Environmental Assessment

May 5, 1999.

In accordance with the National Environmental Policy Act of 1969 and the Federal Energy Regulatory Commission's (Commission's) regulations, 18 CFR part 380 (Order 486, 52 FR 47897), the Commission's Office of Hydropower Licensing has reviewed the Nantahala & Tuckasegee Projects Settlement agreement (settlement agreement) setting minimum flows for the three above named projects. The settlement agreement was signed by the licensee. North Carolina Department of Environment and Natural Resources (DENR), United States Department of Agriculture, Forest Service (USFS), and the United States Department of Interior, Fish and Wildlife Service (USFWS). The Nantahala Hydroelectric Project is located on the Nantahala River in the Counties of Macon and Clay, North Carolina. The West Fork Project is located on the West Fork of the Tuckasegee River in Jackson County, North Carolina. The East Fork Project is located on the East Fork of the Tuckasegee River in Jackson County, North Carolina. An Environmental Assessment (EA) was prepared, and the EA finds that approving the settlement agreement would not constitute a major federal action significantly affecting the quality of the human environment.

The EA was written by staff in the Office of Hydropower Licensing, Federal Energy Regulatory Commission. Copies of the EA are available for inspection and reproduction at the Commission's Public Reference Room, located in Room 2A, 888 First Street, NE, Washington, DC 20426, or by calling (202) 208–1371. The EA may be viewed on the web at http//www.ferc.fed.us/online/rims.htm. Call (202) 208–2222 for assistance.

Linwood A. Watson, Jr.,

Acting Secretary.

[FR Doc. 99–11764 Filed 5–10–99; 8:45 am]

BILLING CODE 6717–01–M

DEPARTMENT OF ENERGY

Federal Energy Regulatory Commission

[Project Nos. 2004–073 and 11607–000]

Holyoke Water Power Company and Holyoke Gas & Electric Department, Ashburnham Municipal Light Plant, and Massachusetts Municipal Wholesale Electric Company; Notice of Intent to Conduct Public Meeting to Discuss the Draft Environmental Impact Statement for the Proposed Relicensing of the Holyoke Project on the Connecticut River

May 5, 1999.

The Federal Energy Regulatory Commission (Commission) is reviewing the Holyoke Water Power Company's application for a new license for the continued operation of the Holyoke Project on the Connecticut River, Massachusetts. The Commission is similarly reviewing a competing application for the Holyoke Project by the Holyoke Gas & Electric Department, the Ashburnham Municipal light Plant, and the Massachusetts Municipal, Wholesale, Electric Company. On April 16, 1999, the Commission staff mailed the draft Environmental Impact Statement draft (EIS) to the Environmental Protection Agency, resource agencies, and non-governmental organizations (NGOs) and other interested individuals. The draft EIS evaluates the environmental consequences of the proposed relicensing to the Holyoke Project.

The Commission staff will hold a public meeting on May 26, 1999, in the City of Holyoke. The purpose of the meeting is to discuss the draft EIS, the draft EIS findings, and the Commission staff's recommendations. At the meeting, the Commission staff will summarize the status of the relicense proceeding(s), as well as the major draft EIS findings and recommendations. We

invite all interested agencies, NGOs, and individuals to attend the meeting. The time and location of the meeting is shown below.

Date: Wednesday, May 26, 1999

Time: 7:00 p.m. until 11:00 p.m.

Place: Holiday Inn, 245 Whiting Farms Road, Holyoke, MA 01040

The meeting will be recorded by a court reporter, and all statements (oral and written) will become part of the Commission's public record for the project. Before the meeting starts, all individuals who attend, will be asked to identify themselves by signing in. Individuals that intend to make statements during the meeting will be asked to sign in and clearly identify themselves for the record prior to speaking. Time allotted for presentations will be determined by staff based on the length of the meeting and the number of people wanting to speak. All individuals wishing to speak will be provided at least five minutes to present their views.

Interested parties who choose not to speak, or who are unable to attend the public meeting, may provide written comments to the Commission until June 7, 1999. Written comments should be submitted to the Secretary, Federal Energy Regulatory Commission, 888 First Street, NE, Washington, DC 20426.

The first page of all filings should indicate ''Holyoke Project, FERC. No. 2004–073'' and/or ''Holyoke Project, FERC. No 11607–000'' at the top of the page. All filings sent to the Secretary of the Commission should contain an original and eight copies. Failure to file an original and eight copies may result in appropriate staff not receiving the benefit of our comments in a timely manner. Furthermore, participants in this proceeding are reminded that if they file comments with the Commission, they must serve a copy of their filing to the parties on the Commission's service list.

For further information, please contact Allan Creamer at (202) 219–0365, or by E-mail at allan.creamer@ferc.fed.us.

Linwood A. Watson, Jr.,

Acting Secretary.

[FR Doc. 99–11762 Filed 5–10–99; 8:45 am]

BILLING CODE 6717–01–M

DEPARTMENT OF ENERGY

Federal Energy Regulatory Commission

Notice of Transfer of Licenses and Soliciting Comments, Motions to Intervene, and Protests

May 5, 1999.

Take notice that the following hydroelectric application has been filed with the Commission and is available for public inspection:

a. *Application Type:* Transfer of Licenses.

b. Project Nos.: (1) 13–009, (2) 2047–005, (3) 2060–006, ((4) 2084–021, (5) 2318–005, (6) 2320–014, (7) 2330–035, (8) 2474–007, (9) 2482–023, (10) 2539–009, (11) 2554–005, (12) 2569–038, (13) 2616–011, (14) 2641–003, (15) 2645–077, (16) 2696–009,[1] (17) 2701–029, (18) 2713–041, (19) 2837–007, (20) 3452–007, (21) 5984–027, (22) 7320–011, (23) 7321–008, (24) 7387–007, (25) 7518–002, (26) 9222–017, (27) 10461–004, (28) 10462–004, and (29) 11408–021.

c. *Date Filed:* February 8, 1999, Date Amended: April 14, 1999.

d. *Applicants:* Niagara Mohawk Power Corporation (NIMO) and Erie Boulevard Hydropower, L.P. (Erie).

e. *Name and Location of Projects:* (1) Green Island: Hudson River in Albany County, New York; (2) Stewarts Bridge: Sacandaga River in Saratoga County, New York; (3) Carry Falls: Raquette River in St. Lawrence County, New York; (4) Upper Raquette River: Raquette River in St. Lawrence County, New York; (5) E.J. West: Sacandaga River in Saratoga County, New York; (6) Middle Raquette River: Raquette River in St. Lawrence County, New York; (7) Lower Raquette River: Raquette River in St. Lawrence County, New York; (8) Oswego River: Oswego River in Oswego County, New York; (9) Hudson River: Hudson River in Warren, Saratoga, and Washington Counties, New York; (10) School Street: Mohawk River in Albany and Saratoga Counties, New York; (11) Feeder Dam: Hudson River in Saratoga County, New York; (12) Black River: Black River in Jefferson County, New York; (13) Hossic River: Hossic River in Rensselaer County, New York; (14) Feeder Dam Transmission Line: Saratoga County, New York; (15) Beaver River: Beaver River in Lewis and Herkimer Counties, New York; (16) Stuyvesant Falls: Kinderhook Creek in Columbia County, New York; (17) West Canada Creek: West Canada Creek in Oneida and Herkimer Counties, New York; (18) Oswegatchie River: Oswegatchie River in St. Lawrence County, New York; (19) Granby: Oswego River in Oswego County, New York; (20) Oak Orchard: New York State Barge Canal in Orleans County, New York; (21) Oswego Falls: Oswego River in Oswego and Onondaga Counties, New York; (22) Chasm: Salmon River in Franklin County, New York; (23) Macomb: Salmon River in Franklin County, New York; (24) Piercefield: Raquette River in St. Lawrence and Franklin Counties, New York; (25) Hogansburg: St. Regis River in Franklin County, New York; (26) Yaleville: Raquette River in St. Lawrence County, New York; (27) Parishville: St. Regis River in St. Lawrence County, New York; (28) Allen Falls: St. Regis River in St. Lawrence County, New York; and (29) Salmon River: Salmon River in Oswego County, New York.

The Green Island Project uses the Corps of Engineers' Troy Lock and Dam and is partially located on federal lands but no tribal lands. The other projects do not utilize federal or tribal lands.

f. *Filed Pursuant to:* Federal Power Act, 16 U.S.C. 791(a)–825(r).

g. *Applicant Contracts:* For NIMO: Margaret Fabic, Esq., Niagara Mohawk Power Corporation, 300 Erie Boulevard West, Syracuse, New York 13202, (315) 428–6593, and Stephen C. Palmer, Esq., Swidler Berlin Shereff Friedman, LLP, 3000 K Street, NW, Suite 300, Washington, DC 20007, (202) 424–7500; For Erie: W. Thaddeus Miller, Erie Boulevard Hydropower, L.P., c/o Orion Power Holdings, Inc., 111 Market Place, Suite 520, Baltimore, Maryland 21202, (410) 468–3692, and Mitchell F. Hertz, Esq., Kirkland & Ellis, 655 15th Street, NW, Suite 1200, Washington, DC 20005, (202) 879–5270.

h. *FERC Contact:* Regina Saizan, (202) 219–2673, or e-mail address: regina.saizan@ferc.fed.us.

i. *Deadline for filing comments and or motions:* June 9, 1999.

All documents (original and eight copies) should be filed with: David P. Boergers, Secretary, Federal Energy Regulatory Commission, 888 First Street, NE, Washington, DC 20426.

Please include the Project Number (0013–009, et al.) on any comments or motions filed.

j. The transfer of the licenses for these projects to Erie is being sought in connection with the divestiture by NIMO of certain generation and other assets. The sale and transfer of these hydroelectric generating assets effectuates, in part, New York State's efforts to restructure its Electric utility industry and NIMO's comprehensive

[1] An application to surrender the license for Project No. 2696 was filed on May 17, 1996. The surrender of the license became effective on February 17, 1999 (86 FERC ¶ 62,135).

Power Choice Settlement agreement approved by the New York Public Service Commission on March 20, 1998.

The transfer application was filed within five years of the expiration of the licenses for Project Nos. 2047, 2060, and 2084, which are the subject of pending relicense applications. In Hydroelectric Relicensing Regulations Under the Federal Power Act (54 Fed. Reg. 23,756; FERC Stats. and Regs., Regs. Preambles 1986–1990, 30,854 at p. 31,437), the Commission declined to forbid all license transfers during the last five years of an existing license, and instead indicated that it would scrutinize all such transfer requests to determine if the transfer's primary purpose was to give the transferee an advantage in relicensing (id. at p. 31,438 n. 318). The transfer would lead to the substitution of the transferee for the transferor as the applicant in the relicensing proceedings for Project Nos. 2047, 2060, and 2084.

In addition, NIMO and Erie request that Erie be substituted for NIMO as the applicant in the pending relicensing proceedings for Project Nos. 2318, 2320, 2330, 2474, 2482, 2539, 2539, 2554, and 2616, following the approval of the transfer of these projects and the conveyance of the project properties. The licenses for the projects expired on December 31, 1993, and the Commission has authorized them to continue to operate.

Project Nos. 10461 and 10462 have pending applications for an original license. NIMO and Erie request that Erie be substituted for NIMO as the applicant in the pending license proceedings for both of these projects following the approval of the transfer of these projects and the conveyance of the project properties.

k. *Locations of the Application:* A copy of the application is available for inspection and reproduction at the Commission's Public Reference Room, located at 888 First Street, NE, Room 2A, Washington, DC 20426, or by calling (202) 208–1371. This filing may be viewed on http://ferc.fed.us/online/rims.htm (call (202) 208–2222 for assistance). A copy is also available for inspection and reproduction at the addresses in item g above.

l. Individuals desiring to be included on the Commission's mailing list should so indicate by writing to the Secretary of the Commission.

Comments, Protests, or Motions to Intervene—Anyone may submit comments, a protest, or a motion to intervene in accordance with the requirements of Rules of Practice and Procedure, 18 CFR 385.210, .211 and .214. In determining the appropriate action to take, the Commission will consider all protests or other comments filed, but only those who file a motion to intervene in accordance with the Commission's Rules may become a party to the proceeding. Any comments, protests, or motions to intervene must be received on or before the specified comment date for the particular application.

Filing and Service of Responsive Documents—Any filings must bear in all capital letters the title ''COMMENTS'', ''RECOMMENDATIONS FOR TERMS AND CONDITIONS'', ''PROTEST'', OR ''MOTION TO INTERVENE'', as applicable, and the Project Number of the particular application to which the filing refers. Any of the above-named documents must be filed by providing the original and the number of copies provided by the Commission's regulations to: The Secretary at the above-mentioned address. A copy of any motion to intervene must also be served upon each representative of the Applicant specified in the particular application.

Agency Comments—Federal, state, and local agencies are invited to file comments on the described application. A copy of the application may be obtained by agencies directly from the Applicant. If an agency does not file comments within the time specified for filing comments, it will be presumed to have no comments. One copy of an agency's comments must also be sent to the Applicant's representatives.

Linwood A. Watson, Jr.,

Acting Secretary.

[FR Doc. 99–11761 Filed 5–10–99; 8:45 am]

BILLING CODE 6717–01–M

DEPARTMENT OF ENERGY

Western Area Power Administration

Amistad and Falcon Projects Rate Order No. WAPA–85

AGENCY: Western Area Power Administration, DOE.

ACTION: Notice of a rate order.

SUMMARY: Notice is given of the confirmation and approval by the Secretary of the Department of Energy (DOE) of Rate Order No. WAPA–85 placing a rate formula extension into effect on an interim basis beginning on June 8, 1999, for power marketed by the Western Area Power Administration (Western) from the Amistad and Falcon Projects under Contract No. 7–07–50–P0890 (Contract). The rate formula will remain in effect on an interim basis until the Federal Energy Regulatory Commission (FERC) confirms, approves, and places it into effect on a final basis or until it is replaced by another rate formula.

DATES: The provisional rate formula extension will be placed into effect on an interim basis on June 8, 1999, and will be in effect until FERC confirms, approves, and places the provisional rate formula extension in effect on a final basis for a 5-year period ending June 7, 2004.

FOR FURTHER INFORMATION CONTACT: Ms. Carol Loftin, Rates Manager, Colorado River Storage Project, Customer Service Center, Western Area Power Administration, 257 East 200 South, Suite 475, Salt Lake City, UT 84111.

SUPPLEMENTARY INFORMATION: The Amistad and Falcon Dams are features of international water storage projects located on the Rio Grande River between Texas and Mexico. Western markets the power from these dams under the terms of the Contract dated August 9, 1977, and amended on April 10, 1986. The rate formula of that Contract was approved by the Federal Power Commission, predecessor to FERC, for a 5-year period beginning June 8, 1983, in Docket No. E–9566 on August 12, 1977. A 5-year rate extension approving this same methodology through June 7, 1993, was ordered by FERC on July 20, 1988, in 44 FERC ¶ 62,058. A subsequent 5-year rate extension approving this same methodology through June 7, 1998, was ordered by FERC on September 29, 1993, in 64 FERC ¶ 62,225. Rate Order WAPA–81, which extended the rate formula through June 7, 1999, was published in the **Federal Register** (63 FR 27278) on May 18, 1998.

According to article 9(a) of the Contract, Western calculates the annual installment to be paid by the South Texas Electric Cooperative, Inc. (STEC), and the Medina Electric Cooperative, Inc. (MEC), for the power generated at the Amistad and Falcon Powerplants on or before August 31 of the year preceding the fiscal year to which it pertains.

Each annual installment pays the annual amortized portion of the United States' investment in the Falcon and Amistad hydroelectric facilities with interest, and the associated operation, maintenance, and administrative costs. This repayment schedule is not dependent upon the power and energy made available for sale or the rate of generation each year. Western will continue to provide STEC/MEC with a revised Exhibit A by August 31 of each year using the same methodology.

By Amendment No. 3 to Delegation Order No. 0204–108, published November 10, 1993 (58 FR 59716), the Secretary of Energy delegated (1) the authority to develop long-term power and transmission rates on a nonexclusive basis to the Administrator of Western; (2) the authority to confirm, approve, and place such rates into effect on an interim basis to the Secretary of Energy; and (3) the authority to confirm, approve, and place into effect on a final basis, to remand, or to disapprove such rates to FERC.

By subsequent Order effective April 15, 1999, the Secretary rescinded all delegation of authority to the Deputy Secretary, whether contained in Delegation Orders, Departmental Directives, or elsewhere, concerning the Department's Power Marketing Administrations, including, but not limited to, authority delegated or affirmed in Delegation Order No. 0204–108, as amended. Existing DOE procedures for public participation in power rate adjustments are located at 10 CFR part 903, effective on September 18, 1985 (50 FR 37835). DOE procedures have been followed by Western in the development of these provisional rates.

Rate Order No. WAPA–85, confirming, approving, and placing the proposed Amistad and Falcon firm power rate formula extension into effect on an interim basis, is issued, and the extension will be promptly submitted to FERC for confirmation and approval on a final basis.

Dated: April 29, 1999.

Bill Richardson,

Secretary.

Order Confirming, Approving, and Placing a Rate Formula Extension for Amistad and Falcon Projects Into Effect on an Interim Basis

June 8, 1999.

This power rate formula is established pursuant to section 302(a) of the Department of Energy (DOE) Organization Act, 42 U.S.C. 7152(a), through which the power marketing functions of the Secretary of the Interior and the Bureau of Reclamation (Reclamation) under the Reclamation Act of 1902, 43 U.S.C. 371 *et seq.*, as amended and supplemented by subsequent enactments, section 9(c) of the Reclamation Act of 1939, 43 U.S.C. 485h(c), and acts specifically applicable to the Falcon Project and the Amistad Project, were transferred to and vested in the Secretary of Energy (Secretary).

By Amendment No. 3 to Delegation Order No. 0204–108, published November 10, 1993 (58 FR 59716), the Secretary delegated (1) the authority to develop long-term power and transmission rates to the Administrator of the Western Area Power Administration (Western); (2) the authority to confirm, approve, and place in effect such rates on an interim basis to the Secretary of Energy; and (3) the authority to confirm, approve, and place into effect on a final basis, to remand, or to disapprove those rates to the Federal Energy Regulatory Commission (FERC). By subsequent Order effective April 15, 1999, the Secretary rescinded all delegation of authority to the Deputy Secretary, whether contained in Delegation Orders, Departmental Directives, or elsewhere, concerning the Department's Power Marketing Administrations, including, but not limited to, authority delegated or affirmed in Delegation Order No. 0204–108, as amended. Existing DOE procedures for public participation in power rate adjustments are found at 10 CFR part 903. Filing requirements and procedures for approving power marketing administration rates by FERC are found at 18 CFR part 300.

Acronyms and Definitions

As used in this rate order, the following acronyms and definitions apply:

DOE: Department of Energy.

DOE Order RA 6120.2: An order dealing with power marketing administration financial reporting used in determining revenue requirements for rate development.

FPC: Federal Power Commission.

FY: Fiscal year; October 1 to September 30.

kWh: Kilowatthour.

MEC: Medina Electric Cooperative, Inc.

Mills/kWh: Mills per kilowatthour.

NEPA: National Environmental Policy Act of 1969.

O&M: Operation and maintenance.

PRS: Power repayment study.

Reclamation: Bureau of Reclamation, U.S. Department of the Interior.

STEC: South Texas Electric Cooperative, Inc.

U.S. Section: U.S. Section of the International Boundary and Water Commission.

Western: Western Area Power Administration, U.S. Department of Energy.

Effective Date

This extension will become effective on an interim basis on June 8, 1999, and will be in effect pending FERC's approval of this or a substitute rate formula on a final basis for a 5-year period through June 7, 2004, or until superseded.

Public Notice and Comment

Paragraph 903.23(a) of 10 CFR part 903 for rate extensions does not require either a consultation and comment period, or public information or comment forums. On August 20, 1998, Western met with the customers, MEC and STEC, in Corpus Christi, Texas, and notified them of Western's intent to extend the rate formula. Western also discussed the number of years covered in the annual installments, operation and maintenance funding, answered questions, and received comments and suggestions. The customers expressed support for the rate formula extension.

Project History

The Amistad and Falcon Dams are features of international water storage projects located on the Rio Grande River between Texas and Mexico. Western markets the power from these dams under the terms of Contract No. 7–07–50–P0890 (Contract), dated August 9, 1977, and amended on April 10, 1986.

On August 12, 1977, in Docket No. E–9566, the FPC approved for a 5-year period the rate formula contained in the Contract, between Reclamation and the two electric cooperatives, to become effective on the date of initial operation of Amistad Powerplant (June 8, 1983). STEC and MEC agreed to purchase the output of the Amistad and Falcon Powerplants for a 50-year period, beginning when initial electric service became available from Amistad. The cooperatives agreed to take all Amistad and Falcon power and to pay the United States the following:

The amount of each annual installment shall be the sum of:

(1) A fixed annual payment of $313,178 as a contribution to the amortization of the United States investment in the Falcon hydroelectric facilities and in the penstocks at Amistad Dam. The annual payment shown above will be adjusted at the time this contract becomes effective; plus

(2) An amount necessary to repay in equal annual installments amortized over a fifty-year period, the United States actual total investment costs, with interest, for hydroelectric power installation at Amistad Dam, not including penstocks, to be under the jurisdiction of the Section, including the costs of engineering plans, supervision, administration of construction, and interest during construction * * * and

(3) The annual operation, maintenance, replacement, and administration costs of the Section and the administration costs of the Bureau related directly or indirectly to the United States power facilities at Amistad Dam and at Falcon Dam, provided that such costs shall be based on prudent and businesslike management practices and in accordance with established electric industry operation and maintenance practices * * *.

The power marketing functions of Reclamation were transferred to Western on October 1, 1977, and Western became responsible for the administration of the above Contract.

Western, STEC, and MEC executed Supplement No. 1 to the Contract on April 10, 1986, to clarify the method for determining the annual installment consistent with DOE Order No. RA 6120.2. Those clarifications address repayment of Falcon hydroelectric facilities within the remaining period, establish interest during construction at 7 percent, capitalize major replacements and additions at current interest rates, and specify the actual date of initial service as June 8, 1983.

Supplement No. 1 requires that the amount of each annual installment be established in advance by the contracting officer in consultation with the U.S. Section and submitted to the cooperatives as Exhibit A on or before August 31 of the year preceding the appropriate fiscal year in accordance with the following:

The amount of each annual installment shall be the sum of:

(1) An annual repayment installment including interest, to amortize within the remaining period, the unpaid United States investment in the Falcon hydroelectric facilities and in the penstocks at Amistad Dam; plus

(2) An annual installment to amortize over a fifty-year period, the United States actual total investment costs with interest, for hydroelectric power facilities, not including penstocks, at Amistad Dam to be under the jurisdiction of the U.S. Section, including the costs of engineering plans, supervision, administration of construction, and interest during construction * * * and

(3) The annual operation, maintenance, replacement, and administration costs of the U.S. Section and the administration costs of Western related directly or indirectly to the United States power facilities at Amistad Dam and at Falcon Dam, provided that such costs shall be based on prudent and businesslike management practices and in accordance with established electric industry operation and maintenance practices * * *.

The billing procedures contained in Supplement No. 1 require Western to submit bills to the cooperatives for each monthly payment on the annual installment on or before the tenth day of the month for which such payment is due. Payments are due and payable by the cooperatives on the first day of the following month. Western divides the calculated annual installment by 12 and bills the customer monthly for this amount.

The rate formula of that Contract was approved by the FPC, predecessor to FERC, for a 5-year period beginning June 8, 1983, in Docket No. E–9566 on August 12, 1977. A 5-year rate extension approving the rate formula, as amended by Supplement No. 1, through June 7, 1993, was ordered by FERC on July 20, 1988, in 44 FERC ¶ 62,058. A subsequent 5-year rate extension approving this same rate formula through June 7, 1998, was ordered by FERC on September 29, 1993, in 64 FERC ¶ 62,225. Rate Order No. WAPA–81, which extended the rate formula through June 7, 1999, was published in the **Federal Register** (63 FR 27278) on May 18, 1998. FERC approval is now sought for another 5-year extension through June 7, 2004, of this same rate formula.

Power Repayment Studies

Electric service Contract No. 7–07–50–P0890, dated August 9, 1977, and Supplement No. 1 thereto require that Western calculate the annual installment to be paid by STEC and MEC for the power generated at the Falcon and Amistad Powerplants, by consultation with the U.S. Section, and submit it to STEC and MEC in the form of a contract exhibit on or before August 31 of the year preceding the FY to which it pertains.

Previously, the annual installment was calculated using data from 3 years. The previous FY reflected actual figures; the current year in which the annual installment is being calculated reflected updated estimates; and the first future year for which the annual installment is being calculated reflects projected estimates. The previous FY actual data is a final calculation for that year and normally does not change in future calculations. Annual installments have been prepared each year, and this 3-year methodology has been followed since the Contract became effective in 1983.

In an effort to streamline and simplify the rate installment computation process and in agreement with STEC, MEC, and the U.S. Section, Western is calculating the annual installment based on 2 years' data. The calculation includes the projected costs of the rate installment year (future fiscal year) and an adjustment from the last historic fiscal year. The adjustment is the surplus or deficit that occurs in the last historic year when actual costs and repayment obligations are subtracted from actual revenues. This surplus or deficit is combined with the projected rate installment year costs to arrive at the rate installment.

Statement of Revenue and Related Expenses

The following table provides a summary of revenues and expenses for the current 5-year rate formula and the actual revenues and expenses for the same period.

AMISTAD/FALCON COMPARISON OF 6-YEAR REVENUES AND EXPENSES—FY 1993–1998

[$1,000]

Item	Projected	Actual	Difference
Total Revenues	20,445	20,572	127R
Revenues Distribution:			
O&M	4,972	5,266	294
Interest	13,893	13,634	(259)
Repayment	1,580	1,947	367
(Deficit)/Surplus	.....	(275)	(275)
Total Revenue Distribution	20,445	20,572	127

The following table provides a summary of the projected revenues and expenses during the provisional rate period.

AMISTAD/FALCON 6-YEAR PROJECTIONS[1] REVENUES AND EXPENSES

[$1,000]

	FY 1999–2004
Total Revenues	20,550
Revenue Distribution:	
O&M	4,912
Interest	13,022
Investment Repayment	2,616
Total	20,550

[1] Although this rate process seeks approval for a 5-year period (FY 2000–2004), 6 years of data (including FY 1999) are shown in the above table because FY 1999 data is an estimate.

Environmental Compliance

In compliance with the National Environmental Policy Act of 1969, 42 U.S.C. 4321 *et seq.*; Council on Environmental Quality Regulations, 40 CFR parts 1500–1508; and DOE NEPA Regulations (10 CFR part 1021), Western has determined that this action is categorically excluded from the preparation of an environmental assessment or environmental impact statement.

Determination under Executive Order 12866

Western has an exemption from centralized regulatory review under Executive Order 12866; accordingly, no clearance of this notice by the Office of Management and Budget is required.

Availability of Information

Information regarding this rate formula extension is available for public review in the Colorado River Storage Project Customer Service Center, Western Area Power Administration, 257 East 200 South, Suite 475, Salt Lake City, Utah, and in the Power Marketing Liaison Office, Room 8G–027, 1000 Independence Avenue SW., Washington, D.C.

Submission to Federal Energy Regulatory Commission

The rate formula extension herein confirmed, approved, and placed into effect on an interim basis, together with supporting documents, will be submitted to FERC for confirmation and approval on a final basis.

Order

In view of the foregoing and pursuant to the authority vested in me as the Secretary of Energy, I confirm and approve and place into effect on an interim basis an extension of the rate formula provisions contained in Contract No. 7–07–50–P0890 and Supplement No. 1 to that Contract effective on June 8, 1999. The rate formula provisions shall remain in effect on an interim basis, pending Federal Energy Regulatory Commission confirmation and approval of this or a substitute rate on a final basis or until superseded, through June 7, 2004.

Dated: April 29, 1999.

Bill Richardson,

Secretary.

[FR Doc. 99–11866 Filed 5–10–99; 8:45 am]

BILLING CODE 6450–01–P

DEPARTMENT OF ENERGY

Western Area Power Administration

Desert Southwest Customer Service Region Network Integration Transmission and Ancillary Services—Rate Order No. WAPA–84

AGENCY: Western Area Power Administration, DOE.

ACTION: Notice of Rate Order.

SUMMARY: Notice is given of the confirmation and approval by the Secretary of the Department of Energy (DOE) of Rate Order No. WAPA–84 and Rate Schedules DSW–SD1, DSW–RS1, DSW–FR1, DSW–EI1, DSW–SPR1, DSW–SUR1, PD–NTS1, and INT–NTS1 placing into effect provisional formula rates for the Desert Southwest Customer Service Region (DSW) network integration transmission services (NTS) for Parker-Davis Project (P–DP) and Pacific Northwest-Pacific Southwest Intertie Project (Intertie) and ancillary services for the Western Area Lower Colorado (WALC) control area. The provisional formula rates will remain in effect on an interim basis until the Federal Energy Regulatory Commission (FERC) confirms, approves, and places them into effect on a final basis.

DATES: The formula rates will be placed into effect from April 1, 1999, through March 31, 2004.

FOR FURTHER INFORMATION CONTACT: Mr. Maher A. Nasir, Rates Team Lead, telephone (602) 352–2768, or Mr. Tyler Carlson, Regional Manager, telephone (602) 352–2453, Desert Southwest Customer Service Region, Western Area Power Administration, P.O. Box 6457, Phoenix, AZ 85005–6457.

SUPPLEMENTARY INFORMATION: On December 7, 1998, the Administrator of Western Area Power Administration (Western) approved formula rate methodologies for short-term sales of NTS and ancillary services in the Western Area Lower Colorado (WALC) control area of the Desert Southwest Region. The six ancillary services include: scheduling, system control, and dispatch service; reactive supply and voltage control service; regulation and frequency response service; energy imbalance service; spinning reserve service, and supplemental reserve service. The provisional formula rates will replace the formula rates for short-term sales.

Provisional Rate Formula for Network Integration Transmission Service

NTS will be separately provided from P–DP and Intertie. The charge for NTS is the product of the transmission customer's load-ratio share times one-twelfth of the annual transmission revenue requirement. The customer's load-ratio share is calculated on a rolling 12-month basis (12–CP). The customer's load-ratio share is equal to the network transmission customer's hourly load coincident with Western's corresponding transmission system's monthly peak divided by the resultant value of the corresponding transmission system's monthly peak minus the coincident peak for all corresponding firm point-to-point transmission service plus corresponding firm point-to-point reservations.

Provisional Rates for Ancillary Services

Six ancillary services will be offered by DSW for WALC, two of which are required to be purchased by the transmission customer. These two are: (1) scheduling, system control, and dispatch service and (2) reactive supply and voltage control service. The remaining four ancillary services (3) regulation and frequency response service; (4) energy imbalance service; (5) spinning reserve service; and (6) supplemental reserve service will be offered, but are subject to availability from DSW generation resources. If DSW is unable to provide these services from its own resources, it will provide the services by making market purchases and passing these costs directly to the customer plus a 10 percent administrative charge.

Scheduling, system control, and dispatch service costs are included in transmission service provided by DSW. The scheduling, system control, and dispatch formula rates apply only to non-transmission customers, and depending on the type of service, will vary between $34.10 and $56.20 per schedule per day.

Reactive supply and voltage control ancillary service is calculated by dividing the combined revenue requirement for the service by the sum of control area average firm power allocation, network transmission 12–CP and firm transmission reservations, yielding a rate of $0.07/kWmonth.

Regulation and frequency response service is not available on a long-term basis from DSW. If available for short-term sales, the price will be equal to the firm-capacity rate of the specific power project supplying the service.

An energy imbalance account will be maintained for each customer scheduling energy in the WALC control area at no charge. DSW reserves the right to assess a penalty applied against deviations outside a 3 percent bandwidth (±1.5 percent deviations), with a 2 MW deviation minimum. A penalty charge of 100 mills/kWh may be assessed for under-deliveries (negative excursion) greater than 1.5 percent and occurring more than five times per month. Over-deliveries (positive excursion) will be credited to the customer for 50 percent of the market value of the over-delivery within 30 days, provided the over-deliveries do not impinge upon DSW operations.

No reserves of either spinning or supplemental are available from DSW resources.

The formula rates for DSW NTS and ancillary services are developed pursuant to the Department of Energy Organization Act (42 U.S.C. 7101 *et seq.*), through which the power marketing functions of the Secretary of the Interior and the Bureau of Reclamation under the Reclamation Act of 1902 (43 U.S.C. 371 *et seq.*), as amended and supplemented by subsequent enactments, particularly section 9(c) of the Reclamation Project Act of 1939 (43 U.S.C. 485h(c)), and other acts specifically applicable to the project involved, were transferred to and vested in the Secretary of Energy.

By Amendment No. 3 to Delegation Order No. 0204–108, published November 10, 1993 (58 FR 59716), the Secretary of Energy delegated (1) the authority to develop long-term power and transmission rates on a nonexclusive basis to the Administrator of Western; (2) the authority to confirm, approve, and place such rates into effect on an interim basis to the Deputy Secretary of Energy; and (3) the authority to confirm, approve, and place into effect on a final basis, to remand, or to disapprove such rates to FERC. By subsequent Order effective April 15, 1999, the Secretary rescinded all delegations of authority to the Deputy Secretary, whether contained in Delegation Orders, Departmental Directives, or elsewhere, concerning the Department's Power Marketing Administrations, including, but not limited to, authority delegated or affirmed in Delegation Order No. 204–108, as amended.

Rate Order No. WAPA–84 was prepared pursuant to Delegation Order No. 0204–108, the Secretarial Order rescinding delegations to the Deputy Secretary concerning the Power Marketing Administrations effective April 15, 1999, existing DOE procedures for public participation in power rate adjustments in 10 CFR part 903, and procedures for approving power marketing administration rates by FERC in 18 CFR part 300. Rate Order No. WAPA–84, confirming, approving, and placing the provisional formula rates for DSW NTS and ancillary services into effect on an interim basis, is issued, and the new Rate Schedules DSW–SD1, DSW–RS1, DSW–FR1, DSW–EI1, DSW–SPR1, DSW–SUR1, PD–NTS1, and INT–NTS1 will be submitted promptly to FERC for confirmation and approval on a final basis.

Dated: April 29, 1999.

Bill Richardson,

Secretary.

Order Confirming, Approving, and Placing the Desert Southwest Customer Service Region Network Integration Transmission and Ancillary Services Formula Rates Into Effect on an Interim Basis

April 1, 1999.

The Desert Southwest Customer Service Region (DSW) network integration transmission services (NTS) and ancillary services formula rates are developed pursuant to the Department of Energy (DOE) Organization Act (42 U.S.C. 7101 *et seq.*), through which the power marketing functions of the Secretary of the Interior and the Bureau of Reclamation under the Reclamation Act of 1902 (43 U.S.C. 371 *et seq.*), as amended and supplemented by subsequent enactments, particularly section 9(c) of the Reclamation Project Act of 1939 (43 U.S.C. 485h(c)), and other acts specifically applicable to the project involved, were transferred to and vested in the Secretary of Energy (Secretary).

By Amendment No. 3 to Delegation Order No. 0204–108, published November 10, 1993 (58 FR 59716), the Secretary delegated (1) the authority to develop long-term power and transmission rates on a nonexclusive basis to the Administrator of the Western Area Power Administration (Western); (2) the authority to confirm, approve, and place such rates into effect on an interim basis to the Deputy Secretary of Energy; and (3) the authority to confirm, approve, and place into effect on a final basis, to remand, or to disapprove such rates to the Federal Energy Regulatory Commission (FERC). By subsequent Order effective April 15, 1999, the Secretary rescinded all delegations of authority to the Deputy Secretary, whether contained in Delegation Orders, Departmental Directives, or elsewhere, concerning the Department's Power Marketing Administrations, including, but not limited to, authority delegated or affirmed in Delegation Order No. 0204–108, as amended. Existing DOE procedures for public participation in power rate adjustments are found at 10 CFR part 903. Procedures for approving power marketing administration rates by FERC are found at 18 CFR part 300.

Acronyms and Definitions

As used in this rate order, the following acronyms and definitions apply:

access: The contracted right to use an electrical system to transfer electrical energy.

ancillary services: Those services necessary to support the transmission of capacity and energy from resources to loads while maintaining reliable operation of the transmission provider's transmission system in accordance with FERC Order Nos. 888 and 889 and Western's Tariff.

Basin Fund: Upper Colorado River Basin Fund, established as part of Colorado River Storage Project Act of April 11, 1956, for defraying the costs of operation, maintenance, and replacement of and emergency expenditures for all facilities of the CRSP.

BCP: Boulder Canyon Project.

capacity: The rated continuous load-carrying ability, expressed in megawatts (MW) or megavolt-amperes (MVA), of generation, transmission, or other electrical equipment.

control area: An electric system or systems, bounded by interconnections metering and telemetry, capable of controlling generation to maintain its interchange schedule with other control areas and contributing to frequency regulation of the interconnection.

CRSP: Colorado River Storage Project (includes Seedskadee and Dolores Projects).

CRSP CSC: Western's Colorado River Storage Project Customer Service Center, in Salt Lake City, Utah.

customer: Any entity which receives transmission, or ancillary services under this rate order.

DOE: United States Department of Energy.

demand: The rate at which electric energy is delivered to or by a system or part of a system, generally expressed in kilowatts or megawatts, at a given instant or average over any designated interval of time.

DSW: Desert Southwest Customer Service Region.

energy imbalance service: Is provided when a difference occurs between the scheduled and actual delivery of energy to a load or from a generation resource within a control area over a single month.

FERC: Federal Energy Regulatory Commission.

firm point-to-point transmission service: Transmission service that is reserved between points of receipt and delivery.

FRN: **Federal Register** notice.

FY: Fiscal Year.

Glen Canyon: One of the storage units of the CRSP.

Intertie: Pacific Northwest-Pacific Southwest Intertie Project.

kW: Kilowatt; 1,000 watts.

kWh: Kilowatt-hour; the common unit of electrical energy, equal to a kW taken for a period of 1 hour.

kWmonth: Kilowatt-month; the common unit of electrical energy, equal to a kW taken for a period of 1 month.

kWyear: Kilowatt-year; the common unit of electrical energy, equal to a kW taken for a period of 1 year.

load: An end-use device or customer that receives power from the electric system.

load-ratio share: Ratio of a transmission customer's network load to the transmission provider's system peak load calculated on a rolling twelve-month basis.

mill: Unit of monetary value equal to .001 of a U.S. dollar; i.e., 1/10th of a cent.

mills/kWh: Mills per kilowatt-hour.

MW: Megawatt; equal to 1,000 kW or 1,000,000 watts.

NEPA: National Environmental Policy Act of 1969.

NTS: Network integration transmission service.

non-firm point-to-point transmission service: Point-to-point transmission service under the Tariff that is scheduled on an as-available basis and is subject to curtailment or interruption.

OASIS: Open Access Same Time Information System.

operating reserve: Spinning reserve service and supplemental reserve service.

P–DP: Parker-Davis Project.

PCF: Public comment forum.

peak: Those hours or other periods defined by contract or other agreements or guides as periods of higher electrical demand.

PIF: Public information forum.

PRS: Power repayment study.

Rate Brochure: A document prepared for public distribution explaining the background and purpose of this rate adjustment proposal.

reactive power: Portion of total power required to produce flux necessary to the operation of electromagnetic devices (such as, transformers). The unit of measurement is the VAR.

reactive supply and voltage control: Provides reactive supply through changes to generator reactive output to maintain transmission line voltage and facilitate electricity transfers.

Reclamation: U.S. Bureau of Reclamation, Department of the Interior.

regulation and frequency response service: Provides for following the moment-to-moment variations in the demand or supply in a control area and maintaining scheduled interconnection frequency.

RMR: Rocky Mountain Customer Service Region.

SCADA: System Control and Data Acquisition.

schedule: An agreed upon transaction for delivery and receipt of power and energy between the contracting parties and the control area(s) or transmission provider involved in the transaction.

scheduling, system control, and dispatch service: Provides for (a) scheduling; (b) confirming and implementing an interchange schedule with other control areas, including intermediary control areas providing transmission service; and (c) ensuring operational security during the interchange transaction.

SLCA/IP: The Salt Lake City Area/ Integrated Projects, which are the CRSP, Collbran, and Rio Grande projects.

spinning reserve service: Providing capacity that is available to serve load immediately in the event of a system contingency. Spinning reserve may be provided by generating units that are on-line and loaded at less than maximum output.

supplemental reserve service: Is needed to serve load in the event of a system contingency. This service is not available immediately to serve load but rather within a short period of time.

system: An interconnected combination of generation, transmission, and distribution components.

Tariff: Open Access Transmission Service Tariff.

transmission: The movement or transfer of electric energy between points of supply and points at which it is transformed for delivery to customers or is delivered to other electric systems.

transmission customer: An eligible customer (or its designated agent) that can or does execute a transmission service agreement or can or does receive transmission service.

transmission provider: Any public utility that owns, operates, or controls facilities used for the transmission of electric energy in interstate commerce.

transmission service: Point-to-point transmission service provided on a firm or non-firm basis.

transmission system: The facilities owned, controlled, or operated by the transmission provider that are used to provide transmission service.

WALC: Western Area Lower Colorado control area.

WACM: Western Area Colorado Missouri control area.

Effective Date

The formula rates will become effective on the first day of the billing period on or after April 1, 1999, and remain in effect until March 31, 2004, pending FERC's approval of them or substitute rates or until superseded. These formula rates will be applied to transmission service agreements under the Tariff and conform with the spirit and intent of FERC Order No. 888.

Public Notice and Comments

The following summarizes the steps taken by DSW to ensure the involvement of interested parties in the rate process:

1. During 1997 and the spring of 1998, DSW hosted a series of meetings presenting alternatives for ancillary services and taking comments from those who attended.

2. A **Federal Register** notice was published on June 19, 1998 (63 FR 118), officially announcing the proposed NTS and ancillary services rates adjustment, initiating the public consultation and comment period, announcing the public information and public comment forums, and outlining procedures for public participation.

3. On June 16, 1998, DSW mailed a copy of the ''Parker-Davis Project, Boulder Canyon Project, Pacific Northwest-Pacific Southwest Intertie Project Transmission and Ancillary Services Rate Adjustment Brochure'' to all firm transmission and power customers and interested parties of those projects and to the Salt Lake City Area/ Integrated Projects (SLCA/IP) firm power, and Colorado River Storage Project (CRSP) transmission customers who receive services from DSW's control area.

4. On June 30, 1998, DSW held a public information forum (PIF) in which the information contained in the Brochure was explained. After the presentation, participants questioned DSW personnel on the particulars of the proposed rates.

5. On July 30, 1998, DSW held a public comment forum (PCF). Participants gave statements of their concerns on the proposed rates.

6. On August 28, 1998, DSW sent a letter to all participants in the PCF and PIF answering any questions which were not answered in the PIF.

7. The consultation and comment period ended on September 18, 1998.

Project Description

Western is a Federal power marketing administration. It was created in 1977 by section 302(a)(1)(E) and (F) of the Department of Energy Organization Act 42 U.S.C. 7152, to perform the power marketing and transmission functions previously performed by the Bureau of Reclamation (Reclamation) for the Secretary of the Interior. DSW markets approximately 2,243 MW of generation capacity from its two power projects—P–DP and BCP. DSW serves firm electric and transmission customers in a three-State area, over a transmission system of approximately 2,097 miles and 74 substations.

Parker-Davis Project

In 1954, the Parker Dam Project and the Davis Dam Project were consolidated to form the Parker-Davis Project (P–DP). The major works include Davis Dam and Powerplant, Parker Dam and Powerplant, a high-voltage transmission system, and substations which sectionalize the long transmission lines.

Lake Havasu, formed by Parker Dam, provides a forebay and desilting basin from which the Metropolitan Water District pumps water into its Colorado River Aqueduct. Parker Dam Powerplant was added to provide low-cost electrical energy to Arizona and southern California. Davis Dam provides re-regulation of the Colorado River below Hoover Dam and facilitates water delivery beyond the boundary of the United States as required by treaty with Mexico. The Davis Dam portion of the project also provides for production and transmission of electrical energy, contributes to flood control, irrigation and municipal water supplies, navigation improvement, recreation, and wild waterfowl protection and related conservation purposes.

The firm point-to-point transmission service rate for P–DP calculated under rate schedule PD–FT6 is $12.99/kWyear. The non-firm point-to-point transmission service rate for P–DP calculated under rate schedule PD–NFT6 is 2.47 mills/kWh.

Boulder Canyon Project

Authorized by the Act of December 21, 1928 (45 Stat. 1057), subject to the terms of the Colorado River Compact, the Boulder Canyon Project (BCP) was conceived for the regulation of the Colorado River to relieve the constantly recurring cycles of flood and drought for the residences of the Southwest. Hoover Dam facilities include a 1,344,800-kilowatt powerplant. The dam and high-voltage switchyards are located in the Black Canyon of the Colorado River, on the Arizona-Nevada State line. Lake Mead, the reservoir behind Hoover Dam, will hold the entire flow of the river for 2 years. This storage, in addition to providing for improvement of navigation, river regulation, and flood control, provides for the delivery of stored water for irrigation and other beneficial consumptive uses, and for the generation of electrical energy.

Pacific Northwest-Pacific Southwest Intertie Project

The Pacific Northwest-Pacific Southwest Intertie Project (Intertie) was authorized as part of a much larger alternating current and direct current combined transmission system, by Section 8 of the Act of August 31, 1964, 16 U.S.C. 837g. The basic purpose of the combined transmission system was to provide, through power transmission system interconnections, maximum use of the total power resources to meet the Nation's growing demands. This purpose was to be accomplished through: (1) the exchange of summer-winter surplus peaking capacity between the northwest and southwest to reduce capital expenditures for new generating capacity, (2) the sale of northwest secondary energy to the southwest, (3) the sale of southwest energy to the northwest to ''firm'' peaking hydroelectric sources during critical water years, (4) conservation of significant amounts of fuel through the use of surplus hydroelectric energy, and (5) increased efficiency in the operation of hydroelectric and thermal resources.

The Intertie facilities extend from Mead Substation in southern Nevada near Boulder City and Hoover Dam, southeast through Arizona, to the Phoenix area. The major features of the system are the Mead and Liberty Substations, a 260-mile Mead-Phoenix 500-kV AC Transmission Line from the Marketplace Substation to Perkins Substation, a 238-mile Mead-Liberty 345-kV Transmission Line, a 31-mile Liberty-Westwing 230-kV Transmission Line, and the 22-mile Westwing-Pinnacle Peak 230-kV Transmission Line.

The firm point-to-point transmission service rate for the Intertie calculated under rate schedule INT–FT2 is $6.58/kWyear for service on the 230/345-kV transmission system and $17.23/kWyear for service on the 500-kV transmission system. The non-firm point-to-point transmission service rate for the Intertie calculated under rate schedule INT–NFT2 is 2.00 mills/kWh.

Discussion

Control Area Consolidation

On April 1, 1998, the Western Area Upper Colorado control area, within which SLCA/IP generation and most of the CRSP transmission system lies, was divided between with two other control areas, the Western Area Colorado Missouri (WACM) operated by Western's Rocky Mountain Customer Service Region (RMR), and the Western Area Lower Colorado (WALC), operated by DSW. SLCA/IP generation is consolidated by the DSW operations, and the transmission lines were divided at Four Corners Substation.

Network Integration Transmission Service

DSW will offer NTS to all eligible transmission customers. NTS is subject to availability. NTS will be offered separately for P–DP and Intertie. Annual power repayment studies (PRS), prepared separately for P–DP and Intertie, are used to derive the annual transmission revenue requirement for NTS. Annual transmission costs used to determine this revenue requirement are operation and maintenance expense, administrative and general expense, principal expense, and interest expense.

The monthly charge for NTS is the product of the transmission customer's load-ratio share times one-twelfth of the annual transmission revenue requirement. The customer's load-ratio share is calculated on a rolling twelve-month basis (12–CP). As outlined in DSW's rate adjustment brochure, the customer's load-ratio share is equal to the network transmission customer's hourly load coincident with the corresponding transmission system's monthly peak hour divided by the resultant value of the corresponding transmission system's monthly peak minus the monthly coincident peak for all corresponding firm point-to-point transmission service plus corresponding firm point-to-point reservations. In order to ensure the collection of the transmission systems' annual revenue requirement, the difference between the first two components of the resultant value outlined above constitutes the network transmission systems' monthly peak and is anticipated to be metered. Thus, an NTS customer, based on its 12–CP load, will pay its proportionate share of the revenue requirement for the month. Since DSW's point-to-point transmission customers are charged on a reservation and not a usage basis, for the purposes of determining the NTS charge, the transmission systems' monthly peak will coincide with the network transmission systems' monthly peak.

Based on updated financial and load data a recalculated revenue requirement will go into effect on October 1 of each year during the effective rate schedule period.

Ancillary Services

DSW has marketed the maximum practical amount of power from each of its projects, leaving little or no flexibility for provision of additional electric services from the projects. Changes in water conditions frequently affect the ability of hydroelectric projects to meet obligations on a short-term basis. The unique characteristics of

the hydro resource, Western's marketing plans, and the limitations of the resource due to changing water conditions limit Western's ability to provide generation-related services, including ancillary services using Federal hydro resources.

Six ancillary services will be offered by DSW, two of which are required to be purchased by the transmission customer. These two are: (1) scheduling, system control, and dispatch service and (2) reactive supply and voltage control services. The remaining four ancillary services (3) regulation and frequency response service; (4) energy imbalance service; (5) spinning reserve service; and (6) supplemental reserve service—will be offered but are subject to availability from DSW generation resources. If DSW is unable to provide these services from its own resources, it will provide the services by making market purchases and passing these costs directly to the customer plus a 10 percent administrative charge.

The provisional formula rates for ancillary services are designed to recover only the costs incurred for providing the service(s). The rates for ancillary services are based on WALC control area costs. The formula rates will be recalculated every year, effective October 1, based on the approved formula and updated financial and load data. DSW will provide customer notice of changes in rates no later than September 1 of each year.

The six ancillary services are as follows:

Scheduling, System Control, and Dispatch Service

Scheduling, system control, and dispatch costs are included in the existing firm point-to-point transmission, firm power, and provisional network integration transmission service rates. The provisional scheduling, system control, and dispatch rate formulas apply only to non-transmission customers.

The formula rates for scheduling, system control, and dispatch are based on an annual cost of all capital costs (such as the dispatch center building) and labor costs associated with the service. The ancillary service is charged on a per schedule basis shown on Table 1 (below).

The cost per schedule per day was determined by multiplying the labor cost per minute, times the average number of minutes it takes to accomplish each type of schedule and adding the associated capital cost amortized over 32 years divided by the average number of schedules in a year. DSW will allow up to five schedule changes per transaction per day at no additional charge. The sixth schedule change will be charged as a new schedule.

The rates charged for scheduling, system control, and dispatch ancillary service are contingent on the type of service required (i.e., new versus existing schedule, SCADA versus no SCADA programming, and intra-bus transfer versus no intra-bus transfer). The rates are shown in the table below.

TABLE 1

Schedule type	Maximum Cost ($) per schedule per day
Existing schedule, requires no SCADA programming or intra-bus transfer [1]	34.10
New schedule, requires SCADA programming, no intra-bus transfer	37.50
Existing schedule, requires no SCADA programming, requires intra-bus transfer	46.85
New schedule, requires SCADA programming, and intra-bus transfer	56.20

[1] Multiple exchange of ownership in an interchange schedule is known as intra-bus transfer schedule.

Reactive Supply and Voltage Control Service From Generation Sources

The transmission provider must offer this service to the transmission customer for each transaction on the transmission provider's transmission facilities. The transmission customer must purchase this service from the transmission provider or the control area operator. The rate for reactive supply and voltage control ancillary service is calculated by dividing the combined revenue requirement for the service of P–DP, BCP, and SLCA/IP, by the sum of the control area's average firm-power allocation transmission reservations, network transmission (12–CP) and average firm transmission reservations, yielding a rate of $0.07/kWmonth. Revenues from this service will be allocated to each project based on a relationship to reactive power produced.

The rate presented at the PIF was $.08/kWmonth. The difference in the two rates is due to the addition of the Intertie transmission reservations, which had been inadvertently excluded, to the denominator of the equation.

Regulation and Frequency Response Service

The transmission provider must offer this service when the transmission service is used to serve load within its control area. The transmission customer must either purchase this service from the transmission provider or make alternative comparable arrangements to satisfy its regulation and frequency response service (Regulation) obligation. Regulation is not available from DSW resources on a long-term firm basis.

Initially, DSW proposed a single control area charge. However, based on comments received and further analysis, DSW has determined, if available, it will charge the firm-capacity rate of the project providing the regulation. The effective firm-capacity rate for BCP is found under rate schedule BCP–F5. The effective firm-capacity rate for P–DP is found under rate schedule PD–F6. The effective firm-capacity rate for SLCA/IP is found under rate schedule SP–FR1. If unavailable, DSW, upon request, will obtain the service on the open market for the customer and pass through the cost of the service, plus a 10 percent administrative charge.

Energy Imbalance Service

An energy imbalance account will be maintained for each customer scheduling energy in the WALC control area. There will be no charge for maintaining an energy imbalance account. The transmission provider must offer this service when the transmission service is used to serve load within its control area. The transmission customer must either request this service from the transmission provider or make alternative comparable arrangements to satisfy its energy imbalance service obligation. DSW established guidelines for energy imbalance service as deviations outside a 3 percent bandwidth (± 1.5 percent hourly deviations), with a 2 MW deviation minimum. These guidelines are consistent with FERC for this service. DSW reserves the right to assess a penalty applied against under-delivery (negative excursion) greater than 1.5 percent and occurring more than five times per month may be assessed a penalty charge of 100 mills/kWh; e.g., the sixth time an under-delivery occurs within a month, the 100 mills/kWh charge will be applied.

Any over-delivery (positive excursion) will be credited to the customer for 50 percent of the market value of the over-delivery within 30 days, provided the over-deliveries do not impinge upon DSW operations. Deviation accounting will be completed monthly on an hour-to-hour basis. The market value determinant will be the average monthly nonfirm price from DSW merchants operating within the WALC control area.

Operating Reserves—Spinning Reserve Service

Spinning reserves are unavailable from WALC resources. DSW, upon request, will obtain reserves on the open market for the customer and pass through the cost of those reserves, plus a 10 percent administrative charge. Transmission customers will be responsible for the transmission service to get these reserves to their destination.

Operating Reserves—Supplemental Reserve Service

Supplemental reserves are unavailable from WALC resources. DSW, upon request, will obtain reserves on the open market for the customer and pass through the cost of those reserves, plus a 10 percent administrative charge. Transmission customers will be responsible for the transmission service to get these reserves to their destination.

Existing and Provisional Rates

This rate order seeks to place DSW's first NTS formula rates and ancillary service formula rates for long-term sales, and as such, no existing rates for comparative purposes can be displayed. The following table is a summary of the formula rates for NTS and ancillary services and rates for April 1, 1999, to September 30, 1999, based on these formulas:

TABLE 2

Service type	Service Description	Formula rate with rate for April 1, 1999 to September 30, 1999.
Scheduling, System Control, and Dispatch.	Required to schedule the movement of power through, out of, within, or into a control area.	Included in appropriate transmission rates. For non-transmission customers, rate per schedule per day is between $34.10 for existing schedule and $56.20 for new with intra-bus schedule and SCADA programming.
Reactive Supply and Voltage Control.	Reactive power support provided from generation facilities that is necessary to maintain transmission voltages within acceptable system limits.	$0.07/kWmonth. Combined revenue requirement for service/WALC average firm transmission reservations, (includes electric service reservations and network reservations).
Regulation and Frequency Response.	Necessary for providing generation to match resources and loads on a real-time continuous basis. Rate will be applied to resources reserved for this service.	Not available from DSW resources. If available on short-term it will be priced at the capacity rate of the project supplying the service. If not available, the service will be purchased on the open market and the cost passed to the customer plus a 10 percent administrative charge.
Energy Imbalance	Provided when a difference occurs between the scheduled and the actual delivery of energy to a load located within a control area over a single hour.	No charge for maintaining an energy imbalance account. Under-deliveries outside a 3 percent bandwidth with a 2 MW deviation minimum may be assessed a penalty. Over-deliveries may be credited 50 percent of market within 30 days.
Spinning Reserve	Needed to serve load immediately in the event of a system contingency.	Not available from DSW resources. If requested, DSW will obtain on the open market and pass on cost plus a 10 percent administrative charge.
Supplemental Reserve	Needed to serve load immediately in the event of a system contingency; however, it is not available immediately to serve load but, rather within a short period of time.	Not available from DSW resources. If requested DSW will obtain on the open market and pass on cost plus a 10 percent administrative charge.
Network Integration Transmission Service.	Transmission service based on customer's load-ratio share.	Revenue Requirement/12 x customer's load-ratio share. P-DP = $23,001,589. Intertie = $21,943,150.

Certification of Rates

Western's Administrator has certified that the DSW NTS and ancillary services formula rates placed into effect on an interim basis herein are the lowest possible consistent with sound business principles. The formula rates have been developed in accordance with agency administrative policies and applicable laws.

Comments

During the public consultation and comment period, Western received 19 written comments on the rate adjustment. In addition, customer representatives from 10 organizations asked questions during the June 30, 1998, PIF or commented during the July 30, 1998, PCF. All comments received during the consultation and comment period were reviewed and considered in preparing this rate order.

Representatives from the following organizations made oral comments during either the PIF or the PCF:

Arizona Electric Power Cooperative, Arizona
Arizona Power Authority, Arizona
Arizona Public Service Company, Arizona
Colorado River Energy Distributors Association, Arizona
Irrigation & Electrical District Association of Arizona, and others
K.R. Saline & Associates, Arizona
Metropolitan Water District, Arizona
Meyer, Hendricks, Phoenix, Arizona
Resource Management International, Phoenix, Arizona
Wellton-Mohawk Irrigation and Drainage District, Arizona

Representatives from the following organizations submitted written comments:

Aguila Irrigation District, Arizona
Arizona Electric Power Cooperative, Arizona
Arizona Power Authority, Arizona
Arizona Public Service Company, Arizona
Buckeye Water Conservation & Drainage District, Arizona
Colorado River Commission, Nevada
Colorado River Energy Distributors Association, Arizona
Electrical District No. 2, Pinal County, Arizona
Electrical District No. 3, Maricopa County, Arizona
Electrical District No. 4, Pinal County, Arizona
Electrical District No. 6, Pinal County, Arizona
Electrical District No. 8, Maricopa County, Arizona
Harquahala Valley Power District, Arizona
Irrigation & Electrical District Association of Arizona, and others
Maricopa Water District, Arizona
McMullen Valley Water Conservation & Drainage District, Arizona
Metropolitan Water District of Southern California, California
Roosevelt Irrigation District, Arizona
Salt River Project, Arizona
San Tan Irrigation District, Arizona
City of Stafford, Arizona

The following comments were received during the public comment

period. DSW paraphrased and combined comments when it did not affect the meaning. Several comments are outside the scope of this rate order. In response to these comments, DSW has either indicated the proper forum for the comment or generalized DSW policy for clarification. DSW's response follows each comment.

Network Integration Transmission Service

Comment: Several commentors want to know the level of NTS that Western expects to have available in P-DP and Intertie, and if Western has received any requests for that service. A commentor stated that Western should offer NTS.

Response: At the time this rate order was published, DSW had not received any requests for NTS and no studies have been done to determine availability of NTS for any customers.

Comment: A commentor expressed concern about the effect NTS will have on dispatch of SLCA/IP, P-DP, and BCP generation resources (e.g., redispatch obligation during a transmission constraint). A commentor requests explanation of the process to be undertaken when assessing NTS, and is concerned whether or not Western will consider potential legal, environmental, and operational issues related to providing NTS as part of the impact study prepared for requests for NTS. A commentor questions if the process to assess NTS is in a descriptive form and can it be accessed through the OASIS.

Response: This question is outside the scope of this rate order process because it does not speak to the pricing of the service. Redispatch is discussed in section III of the Tariff. Requests for NTS will be evaluated on a case-by-case basis. The process for this evaluation is discussed in the Tariff, which is available by hot links in the OASIS. Furthermore, Western will evaluate its ability to provide NTS under section 32 of the Tariff and will continue to meet its firm contractual obligations. Western will not enter into any agreements which cause it to operate outside its operational, legal, and environmental parameters.

Comment: A commentor wants clarification of how Western will allocate the cost of a load across two systems when the delivery is from a receipt point to a delivery point for a customer taking NTS.

Response: Each project is treated as a separate transmission system. A customer requesting NTS from two different transmission systems, would have to make separate requests for this service from the respective transmission system's provider, and each transmission system would have to be evaluated for its capability to provide network service. If both transmission systems have the availability to provide NTS, then the transmission customer would have to pay for the network service on each of the transmission systems. DSW's NTS formula rates for the P-DP and Intertie transmission systems are the same, but the variable values for annual revenue requirement and loads are unique for each project. Therefore, a transmission customer receiving NTS on both the P-DP and Intertie transmission systems would receive monthly charges from each project based on the resultant formula calculation for each individual project.

Ancillary Services

Scheduling, System Control, and Dispatch

Comment: A commentor stated that the rate for scheduling, system control, and dispatch service is too high.

Response: Scheduling, system control, and dispatch service costs are included in all types of transmission service provided by DSW. The formula rate presented in this rate order uses an incremental cost approach and is applicable to non-transmission customers.

Comment: A commentor believes that using a per schedule instead of a rate based on megawatts discriminates against small customers and is not comparable to what DSW is charging under its bundled services to its statutory service customers since firm customers are charged on a per kilowatt basis.

Response: DSW's methodology for developing a rate for scheduling, system control, and dispatch service applies incremental cost recovery for services supplied to non-transmission customers. It allows DSW to differentiate between requests that require no programming or intra-bus transfers from those that do. Ultimately, DSW's intent is to recover the costs for providing the service. This intent is consistent with what DSW charges under its bundled services.

Reactive Supply and Voltage Control

Comment: A commentor does not know how Western will determine power factor for customers passing through the system as opposed to serving loads within the control area.

Response: This comment is outside the scope of this rate order process. However, the power factor may be measured at the customer's demarcation points to the WALC control area provided that they can be discretely identified.

Regulation

Comment: A commentor wants to know how and under what conditions does Western expect to have regulation service available to offer on a long-term and short-term basis.

Response: This question is outside the scope of the rate order. DSW has stated in this rate order that it does not expect to have regulation available for sale from its project generation on a long-term basis. However, there may be short-term, hourly regulation available which would be priced at the firm-capacity rate of the project providing the service.

Comment: A commentor wants clarification on how Western plans to price regulation provided by SLCA/IP resources (CRSP CSC rate or DSW rate) and to credit revenues to SLCA/IP resources for regulation provided (CRSP CSC rate or DSW rate).

Response: This comment is addressed in the CRSP CRC rate process. Initially, DSW proposed single control area rate which included SLCA/IP, P-DP, and BCP generation costs. Since that time, DSW has determined it will apply the firm-capacity rate of the generation project providing the regulation service. If unavailable, DSW, upon request, will purchase this service from the market, plus a 10 percent administrative charge.

As approved by FERC at 84 FERC 61 ¶ 039 in the CRSP CSC rate process, the price for regulation will be determined under the SP-FR1 rate schedule. The rate schedule provides for CRSP CSC to ''. . . obtain regulation on the open market for the customer and pass through the costs, plus a 10 percent administrative charge, if unavailable from SLCA/IP resources. If available for sale, the SLCA/IP firm-power capacity rate, currently in effect, will be charged.''

If a transmission customer purchases this service from SLCA/IP generation, those revenues will go directly to the Basin Fund.

Comment: A commentor expressed a preference for regulation revenue being allocated to the unit (or at least the project) that supplies the service rather than having an allocation based on the installed capacity. A commentor gave an example that if Hoover is providing the regulation, revenue should be credited toward the Hoover project. Another commentor requests that Western consider allocating the revenues assigned to DSW on the same basis as they are allocated between DSW and CRSP CSC, that is, based on the capacity used to provide the service.

Response: Western considered these comments and agrees. Western has

changed the basis for the regulation service charge. The regulation service rate will be equal to the capacity charge for the project which supplies the service and revenues will be credited to that project.

Energy Imbalance

Comment: A commentor expressed concern that it may be risky for Western to allow up to five ''free'' energy imbalance deviations based on deviation during the most costly hours of the month.

Response: DSW has included in its energy imbalance compensation methodology a provision which allows the transmission customer to exceed the 1.5 percent bandwidth ''five times'' per month without penalty. DSW included this provision in its proposed methodology because it believes it is fair and reasonable. If DSW determines that exceeding the bandwidth more than ''five times'' without penalty is not reasonable, it may revise its rate schedule to include a more appropriate penalty. However, given that five times results in 5 hours out of an average of 730 hours in a month, DSW does not believe this is unreasonable and would not result in a significant risk.

Comment: A commentor suggests Western's assessment for under-delivery should be based on the greater of 100 mills/kWh or the real-time cost of dealing with the imbalance and requests that DSW consider imposing a penalty upon entities which continually under-deliver their schedule, even if they remain within the proposed 1.5 percent allowance.

Response: DSW believes 100 mills/kWh is adequate to cover costs. The energy will be returned in addition to the penalty, if DSW determines it should be assessed. Within normal operations, it is reasonable to expect some amount of under-delivery throughout a month.

Spinning and Supplemental Reserves

Comment: A commentor wants to know if Western intends to provide short-term spinning and supplemental reserve services. If so, at what rate?

Response: DSW does not expect to have short-term spinning and supplemental reserve services. DSW will offer to purchase this service for a transmission customer, and pass through the cost, plus a 10 percent administrative charge.

Comment: A commentor requested clarification that Western would obtain reserves only upon the request of specific customers and that those costs would be borne entirely by the requesting customers.

Response: This is correct. The costs to the requesting customer will also include a 10 percent administrative charge.

General

Comment: A commentor wants to know how Western will determine what excess ancillary services are available for the market.

Response: This comment is outside the scope of this rate process. The method for determining excess ancillary services will be determined in the implementation process.

Comment: Several commentors questioned Western's ability to account for and properly allocate across the DSW projects the costs incurred in providing ancillary services.

Response: DSW believes it has allocated costs appropriately among all projects. Costs are in the rates expressed as the revenue requirement. The method for accounting for the costs was developed in an informal work group.

Comment: A commentor suggests that the rate order should document Western's limited ability to provide NTS and ancillary services and recommends adoption of language previously stated by CRSP CSC.

Response: Western recognizes its limited ability to provide generation-related services from all its projects, as reflected in its Tariff which states, ''Western has marketed the maximum practical amount of power from each of its projects, leaving little or no flexibility for provision of additional power services.''

DSW recognizes the fact that it has limited ability to provide NTS and ancillary services and has stated this fact in this rate order. For those ancillary services that DSW is unable to provide from its own resources, DSW, upon customer request, will purchase the service and pass through the costs to the customer plus a 10 percent administrative charge.

Comment: A commentor stated Western does not have any services available because of its legal and statutory obligations. Several commentors questioned Western's ability to provide these services without contracting away resources which contractually belong to its statutory customers.

Response: As stated in Western's Tariff, Western is, at the request of the Secretary of DOE, undertaking to comply with the principles of FERC Order Nos. 888 and 889 to the extent consistent with applicable law, and accordingly will provide NTS and ancillary services to the extent it has the capability to do so. As stated in the Tariff, ''Nothing in this tariff shall alter, amend, or abridge the statutory or contractual obligations of Western to market and deliver Federal power resources and to repay the Federal investment in such projects.''

Comment: A commentor wants to know what role the current customers will have when applications for services are entertained. A commentor suggests Western adopt specific processes which would include something like notification of current customers so they can protect their interests by some monitoring function. A commentor requests that Western consider ways to best use existing customer processes.

Response: These questions are outside the scope of this rate order. However, DSW will not implement a new process for customer input on individual requests for firm or non-firm transmission. DSW believes that existing processes (such as Joint Planning) are still the best mechanisms for continuing customer communication.

Comment: A commentor requests Western maintain a record of transactions to identify how the ancillary services are identified and provided, and how the revenues and costs are allocated. A commentor requests clarification on how Western plans to track the services provided by each office and allocate the revenues appropriately. Some recommendations made were that Western adopt a process which documents provider, cost, recipient, and revenue flow, and that there be a record that clearly identifies the flow of these revenues into the Basin Fund. Several commentors questioned Western's ability to properly allocate any revenues that may be received from ancillary service sales.

Response: The comments are outside the scope of this rate order. However, Western has the ability and knowledge to properly allocate any revenues received from the sale of ancillary services to the appropriate project account. For each transaction, Western's financial records will indicate the entity that received the service, the type of service provided, the amount of revenues received, and which fund received the revenues. Western has established a separate code for each transmission and ancillary service. The flow of funds into the Basin Fund will be clearly identified in Western's financial records.

Comment: A commentor requests that Western's OASIS postings and operating procedures reflect the nature of the availability of services.

Response: This request is outside the scope of this rate order. However, the

Tariff outlines Western's limited ability to provide generation-related services, and the Tariff is the governing document under which all OASIS transactions will be conducted.

Comment: Several commentors questioned what policies, procedures, or guidelines has Western developed to ensure that if these additional services are marketed and provided that they will have no adverse operational or financial effect on CRSP CSC customers.

Response: This comment is outside the scope of this rate order. DSW does not anticipate having a substantial amount of ancillary service sales from its Federal generation. Because Western recognizes this fact, and is committed to its statutory obligations, Western has included in its Tariff provisions for purchases from other sources to satisfy requests for specific ancillary services.

DSW will continue to operate in the same manner as it has in the past. That is, it will continue to meet its firm-power obligations and its firm-transmission obligations, all within allowable operational constraints. DSW will continue to review individual requests taking these factors into consideration. Western will also continue to not make any sales of generation-related services from the Federal generators if it does not have the capability to do so.

Western will identify and track services provided by SLCA/IP and ensure that SLCA/IP is being compensated for those services appropriately.

Comment: A commentor wants to know the revenue potential and overhead incurred if Western segregates the merchant function.

Response: This comment is outside the scope of the rate order because, the rate proposal does not include merchant function costs. It is unknown at this time what costs may be incurred for overhead or what revenue potential exists if Western should separate the function.

Comment: A commentor observed that many questions and comments at both the PIF and PCF were about the marketing of services, and not the pricing. A commentor requests Western address the questions related to marketing and marketing activities. A commentor recognizes that many of the questions will not be answered in final decision on rates.

Response: Western agrees that many comments are outside the subject of this rate order but DSW has, when possible, addressed those questions and comments which relate to the marketing of NTS and ancillary services. Those questions or comments which were not addressed will be resolved as Western implements its Tariff, within the limits of its marketing plan.

Comment: A commentor noted that the revenue stream from NTS and ancillary services seem to apply to a revenue requirement which is already being covered by existing DSW customers and appears to be profitable.

Response: For the immediate future, these revenue streams were not included in the rate study projections. However at the end of each year, money from NTS and ancillary services will be included as ''other revenue'' in the PRS, thus offsetting the revenue requirement.

Comment: A commentor requests that DSW take into consideration the importance of looking at current commitments, and statutory obligations under existing arrangements to understand Western's ability to provide the proposed services.

Response: This rate order presents a methodology for determining rates for each service if it were to be sold. As part of implementing Western's Tariff, it will be determined if resources exist to supply any individual request. All requests will be looked at thoroughly to determine viability in a manner not detrimental to present commitments.

Comment: A commentor questions Western's ability to provide NTS since Western would have to integrate loads and other generators into its control area, causing a change in the operation of its generators. A commentor asserts that integration would result in the violation of a generation project's environmental assessment and marketing plan, and that a change in the operations has not been studied in any of Western's marketing plans. As a result, the commentor requests Western state clearly in its documentation that it cannot provide NTS or ancillary services. A commentor expressed similar concerns. A commentor is concerned about any additional marketing by Western of generation-related services because of the potential increase and magnitude of violations of operating criteria established for Glen Canyon Dam. A commentor is concerned that Western has some unique obligations and legal requirements, particularly related to operations at Glen Canyon Dam, that the commentor wants to ensure are not impinged upon.

Response: Western has committed to providing NTS, to the extent it has the capability to do so. When an application for NTS is received by Western, Western must evaluate its ability to provide the service considering existing contractual firm obligations.

The CRSP CSC, in its Notice of Rate Order, stated, ''Western has allocated most of its SLCA/IP power resources to preference entities under long-term commitments. Western will determine if any of its SLCA/IP resources are available to provide the ancillary service requested at the time of the request. If Western does not have the resources available from the SLCA/IP, the CRSP CSC will offer to purchase the resource from the open market or from a control area operator, and pass the cost through to the customer.'' Since Glen Canyon Dam is a large component of SLCA/IP, no additional sales of generation-related services will be made from Glen Canyon Dam if the resources are not available.

Operational constraints at Glen Canyon Dam will not be violated to provide sales of ancillary or transmission services. DSW and Reclamation ensure that operational constraints are adhered to and when resources are required beyond the operational capability of those facilities, purchases of supplemental resources are made by Western. In recognition of the resource limitations and restrictions of the generation facilities, Western included a provision in its Tariff, that provides Western the option to purchase ancillary services and pass through the cost to the transmission customer.

Regulatory Flexibility Analysis

The Regulatory Flexibility Act of 1980 (5 U.S.C. 601 *et seq.*) requires Federal agencies to perform a regulatory flexibility analysis if a proposed rule is likely to have a significant economic impact on a substantial number of small entities and there is a legal requirement to issue a general notice of proposed rulemaking. Western has determined that this action does not require a regulatory flexibility analysis since it is a rulemaking of particular applicability involving rates or services applicable to public property.

Environmental Compliance

In compliance with the National Environmental Policy Act of 1969, 42 U.S.C. 4321, *et seq.*; Council On Environmental Quality Regulations, 40 CFR parts 1500–1508; and DOE NEPA Regulations, 10 CFR part 1021, Western has determined that this action is categorically excluded from the preparation of an environmental assessment or of an environmental impact statement.

Determination Under Executive Order 12866

Western has an exemption from centralized regulatory review under Executive Order 12866; accordingly, no

clearance of this notice by the Office of Management and Budget is required.

Submission to Federal Energy Regulatory Commission

The formula rates herein confirmed, approved, and placed into effect on an interim basis, together with supporting documents, will be submitted to FERC for confirmation and approval on a final basis.

Order

In view of the foregoing and pursuant to the authority vested in me as the Secretary of Energy, I confirm, approve, and place into effect on an interim basis, effective April 1, 1999, formula rates for transmission and ancillary services under Rate Schedules DSW–SD1, DSW–RS1, DSW–FR1, DSW–EI1, DSW–SPR1, DSW–SUR1, PD–NTS1, and INT–NTS1. The rate schedules shall remain in effect on an interim basis, pending FERC confirmation and approval of them or substitute formula rates on a final basis through March 31, 2004.

Dated: April 29, 1999.

Bill Richardson,

Secretary.

Rate Schedule DSW–SD1; Schedule 1 to Tariff—Scheduling, System Control, and Dispatch Service

Effective

The first day of the first full billing period beginning on or after April 1, 1999, through March 31, 2004.

Applicable

This service is required to schedule the movement of power through, out of, within, or into the Western Area Lower Colorado control area (WALC). The charges for scheduling, system control, and dispatch service are to be based on the rate referred to below. The formula rate used to calculate the charges for service under this schedule was promulgated and may be modified pursuant to applicable Federal laws, regulations, and policies.

This formula rate is applicable to transactions with entities not taking transmission service in WALC. Charges for scheduling, system control, and dispatch service are included in the transmission rate. The Desert Southwest Customer Service Region's charges for scheduling, system control, and dispatch service may be modified upon written notice to the customer and any change to the charges for the service shall be as set forth in a revision to this rate schedule promulgated pursuant to applicable Federal laws, regulations, and policies and made part of the applicable service agreement.

Formula Rate

Cost per schedule = annual capital costs per schedule + (hourly labor rate × avg time to execute schedule).

Rate

The rates charged for the scheduling, system control, and dispatch service are contingent on the type of service required. The maximum rates that can be charged for the various schedule types are shown in the table below:

Schedule Type	Maximum cost ($) per schedule per day
Existing schedule, requires no SCADA programming or intra-bus transfer [1]	34.10
New schedule, requires SCADA programming, no intra-bus transfer	37.50
Existing schedule, requires no SCADA programming, requires intra-bus transfer	46.85
New schedule, requires SCADA programming, and intra-bus transfer	56.201

[1] Multiple exchange of ownership in an interchange schedule is known as intra-bus transfer schedule.

The above rates are based on FY 1997 financial and load data, and will be in effect April 1, 1999, through September 30, 1999. Based on updated financial and load data, a recalculated rate will go into effect on October 1 of each year during the effective rate period.

Rate Schedule DSW–RS1; Schedule 2 to Tariff—Reactive Supply and Voltage Control From Generation Sources Service

Effective

The first day of the first full billing period beginning on or after April 1, 1999, through March 31, 2004.

Applicable

In order to maintain transmission voltages on all transmission facilities within acceptable limits, generation facilities under the control of the Western Area Lower Colorado control area (WALC) are operated to produce or absorb reactive power. Thus, reactive supply and voltage control from generation sources service (VAR Support) must be provided for each transaction on the transmission provider's transmission facilities. Generation sources under WALC are the Parker-Davis Project, the Boulder Canyon Project and the Salt Lake City Area/Integrated Projects. This service is required to be offered to the transmission customer by the transmission provider in order to maintain transmission voltages on the transmission provider's transmission facilities within acceptable limits.

The customer must purchase this service from the WALC operator. The charges for such service will be based upon the rate referred to below.

The formula rate used to calculate the charges for service under this schedule was promulgated and may be modified pursuant to applicable Federal laws, regulations, and policies. The Desert Southwest Customer Service Region (DSW) charges for VAR Support may be modified upon written notice to the customer. Any change to the charges for VAR Support shall be as set forth in a revision to this rate schedule promulgated pursuant to applicable Federal laws, regulations, and policies and made part of the applicable service agreement. DSW shall charge the customer in accordance with the rate then in effect.

Formula Rate

$$\text{WALC VAR Support Rate} = \frac{\text{Total Annual Combined Revenue Requirement for Service (TACRRS)}}{\text{WALC Transmission Reservations}}$$

$$\text{WALC Transmission Reservations} = \text{Average firm power allocation transmission reservations} + \text{average firm transmission reservations.}$$

TACRRS is determined by combining, for each generation project, the product of the percentage of resource capability used for reactive supply and the total generation projects revenue requirement.

Rate

The rate to be in effect April 1, 1999, through September 30, 1999, is:

Monthly: $0.07/kWmonth.
Weekly: $0.02/kWweek.
Daily: $0.00237/kWday.
Hourly: 0.0986 mills/kWh.

This rate is based on the above formula and on FY 97 financial and load data. Based on updated financial and load data, a recalculated rate will go into effect on October 1 of each year during the effective rate period.

Rate Schedule DSW–FR1; Schedule 3 to Tariff—Regulation and Frequency Response Service

Effective:

The first day of the first full billing period beginning on or after April 1, 1999, through March 31, 2004.

Applicable

Regulation and frequency response service (Regulation) is necessary to provide for the continuous balancing of resources, generation, and interchange, with load and for maintaining scheduled interconnection frequency at sixty cycles per second (60 Hz). Regulation is accomplished by committing on-line generation whose output is raised or lowered, predominantly through the use of automatic generating control equipment, as necessary to follow the moment-by-moment changes in load. The obligation to maintain this balance between resources and load lies with the transmission provider. The transmission customers and customers on others' transmission systems within WALC must either purchase this service from WALC or make alternative comparable arrangements to satisfy its Regulation obligation. The charges for Regulation are referred to below. The amount of Regulation will be set forth in the service agreement.

The formula rate used to calculate the charges for service under this schedule was promulgated and may be modified pursuant to applicable Federal laws, regulations, and policies.

The Desert Southwest Customer Service Region's (DSW) charges for Regulation may be modified upon written notice to the Customer. Any change to the Regulation charges shall be as set forth in a revision to this rate schedule promulgated pursuant to applicable Federal laws, regulations, and policies and made part of the applicable service agreement. DSW shall charge the customer in accordance with the rate then in effect.

Formula Rate:

Regulation will not be available on a long-term basis from DSW resources. If this service is requested, and DSW determines that it is available on a short-term basis, it will be priced at the firm-capacity rate in effect for the generation project supplying the service. Otherwise, DSW, upon request, will obtain Regulation on the open market for the customer and pass through the cost, plus a 10 percent administrative charge.

Rate

DSW Regulation Rate = market price + 10 percent
OR
=Capacity Rate of Generation Project Supplying Service (depending upon availability)

The effective firm-capacity rate for Parker-Davis Project is found under rate schedule PD–F6. For Boulder Canyon Project, the effective firm-capacity rate is found under BCP–F5. For Salt Lake City Area/Integrated Projects, the effective firm-capacity rate is found under rate schedule SP–FR1.

Rate Schedule DSW–EI1; Schedule 4 to Tariff—Energy Imbalance Service

Effective

The first day of the first full billing period beginning on or after April 1, 1999, through March 31, 2004.

Applicable

Energy imbalance service is provided when a difference occurs between the scheduled and the actual delivery of energy to a load located within the Western Area Lower Colorado control area (WALC) over a single hour. The transmission customer and customers on others' transmission system within WALC must either obtain this service from WALC or make alternative comparable arrangements to satisfy its energy imbalance service obligation.

The WALC shall establish a deviation band width of ±1.5 percent (with a minimum of 2 MW) of the scheduled transaction to be applied hourly to any energy imbalance that occurs as a result of the customer's scheduled transaction(s). Deviation accounting will be completed monthly on an hour-to-hour basis.

The formula rate used to calculate the charges for service under this schedule was promulgated and may be modified pursuant to applicable Federal laws, regulations, and policies.

The energy imbalance service compensation may be modified upon written notice to the customer. Any change to the customer compensation for energy imbalance service shall be as set forth in a revision to this schedule promulgated pursuant to applicable Federal laws, regulations, and policies and made part of the applicable service agreement. The Desert Southwest Customer Service Region (DSW) shall charge the customer in accordance with the rate then in effect.

Formula Rate

For negative excursions (under-deliveries) outside the bandwidth and occurring more than five times per month, DSW reserves the right to assess a penalty charge of 100 mills/kWh.

For positive excursions (over-deliveries) outside the bandwidth, the customer will be credited on the customer's bill, lagged by 1 month. The credit will be 50 percent of the market value of the over-delivery, provided the over-deliveries do not impinge upon WALC operations. For example, during times of high water or operating constraints, DSW reserves the right to eliminate credits for over-deliveries.

Rate

The bandwidth in effect is 3 percent (±1.5 percent hourly deviation) with a 2 MW deviation minimum.

Rate Schedule DSW-SPR1; Schedule 5 to Tariff—Operating Reserve—Spinning Reserve Service

Effective

The first day of the first full billing period beginning on or after April 1, 1999, through March 31, 2004.

Applicable

Spinning reserve service (Reserves) is needed to serve load immediately in the event of a system contingency. Reserves may be provided by generating units that are on-line and loaded at less than maximum output. The transmission customer must either purchase this service from the Western Area Lower Colorado control area (WALC), or make alternative comparable arrangements to satisfy its Reserves requirements. The charges for Reserves are referred to below. The amount of Reserves will be set forth in the service agreement.

Formula Rate

No long-term Reserves are available from WALC resources. The Desert Southwest Customer Service Region, upon request, will obtain the Reserves on the open market for the customer and

pass through the cost, plus a 10 percent administrative charge.

Rate

Cost for Reserves = market price + 10 percent.

Rate Schedule PD–NTS1; Attachment H–1 to Tariff—Schedule of Rate for Network Integration Transmission Service on the Parker-Davis Project

Effective

The first day of the first full billing period beginning on or after April 1, 1999, through March 31, 2004.

Applicable

The transmission customer shall compensate the Parker-Davis Project each month for network integration transmission service (NTS) pursuant to the applicable Network Integration Transmission Service Agreement and annual revenue requirement referred to below. The formula for the annual revenue requirement used to calculate the charges for this service under this schedule was promulgated and may be modified pursuant to applicable Federal laws, regulations, and policies.

The Desert Southwest Customer Service Region (DSW) may modify the charges for NTS upon written notice to the transmission customer. Any change to the charges to the transmission customer for NTS shall be as set forth in a revision to this rate schedule promulgated pursuant to applicable Federal laws, regulations, and policies and made part of the applicable service agreement. DSW shall charge the transmission customer in accordance with the revenue requirement then in effect.

Formula Rate

Monthly Charge = Transmission Customer's Load-Ratio Share × (Revenue Requirement/12)

Rate

The projected annual revenue requirement allocated to transmission for FY 1999 for the Parker-Davis Project is $23,001,589. Based on updated financial and load data, a recalculated revenue requirement will go into effect on October 1 of each year during the effective rate schedule period.

Rate Schedule INT–NTS1; Attachment H–2 to Tariff—Schedule of Rate for Network Integration Transmission Service on the Pacific Northwest-Pacific Southwest Intertie Project

Effective

The first day of the first full billing period beginning on or after April 1, 1999, through March 31, 2004.

Applicable

The transmission customer shall compensate the Pacific Northwest-Pacific Southwest Intertie Project (Intertie) each month for network transmission service (NTS) pursuant to the applicable Network Integration Transmission Service Agreement and annual revenue requirement referred to below. The formula for the annual revenue requirement used to calculate the charges for this service under this schedule was promulgated and may be modified pursuant to applicable Federal laws, regulations, and policies.

The Desert Southwest Customer Service Region (DSW) may modify the charges for NTS upon written notice to the transmission customer. Any change to the charges to the transmission customer for NTS shall be as set forth in a revision to this rate schedule promulgated pursuant to applicable Federal laws, regulations, and policies and made part of the applicable service agreement. DSW shall charge the transmission customer in accordance with the revenue requirement then in effect.

Formula Rate

Monthly Charge = Transmission Customer's Load-Ratio Share × (Revenue Requirement/12)

Rate

The projected annual revenue requirement for FY 1999 for the Pacific Northwest-Pacific Southwest Intertie Project is $21,943,150. Based on updated financial and load data, a recalculated revenue requirement will go into effect on October 1 of each year during the effective rate schedule period.

[FR Doc. 99–11864 Filed 5–10–99; 8:45 am]

BILLING CODE 6450–01–P

ENVIRONMENTAL PROTECTION AGENCY

[FRL–6339–8]

Agency Information Collection Activities: Submission for OMB Review; Comment Request, NSPS for VOC Equipment Leaks in the Synthetic Organic Chemical Industry (SOCMI)

AGENCY: Environmental Protection Agency (EPA).

ACTION: Notice.

SUMMARY: In compliance with the Paperwork Reduction Act (44 U.S.C. 3501 *et. seq.*), this document announces that the Information Collection Request (ICR) has been forwarded to the Office of Management and Budget (OMB) for review and approval: NSPS for VOC Equipment Leaks in the Synthetic Organic Chemical Manufacturing Industry (SOCMI). OMB Control number 2060–0012, expiration 7/31/99. The ICR describes the nature of the information collection and its expected cost and burden; where appropriate, it includes the actual data collection instrument.

DATES: Comments must be submitted on or before June 10, 1999.

FOR FURTHER INFORMATION CONTACT: Sandy Farmer at EPA by phone at (202) 260–2740, by E-Mail at Farmer.Sandy@epamail.epa.gov or download a copy of the ICR off the Internet at http://www.epa.gov/icr and refer to EPA ICR No. 0662.06.

SUPPLEMENTARY INFORMATION:

Title: NSPS—Equipment Leaks of VOC in the Synthetic Organic Chemical Manufacturing. OMB Control No. 2060–0012; EPA ICR No. 0662.06. Expiration date 7/31/99.This is a request for an extension of a currently approved collection.

Abstract: This ICR contains record keeping and reporting requirements that are mandatory for compliance with 40 CFR part 60.480, subpart VV, VOC Equipment Leaks in SOCMI. This information is used by the Agency to identify sources subject to the standards and to insure that the best demonstrated technology is being properly applied. The standards require periodic recordkeeping to document process information relating to the sources' ability to identify and eliminate leaking equipment. The standards apply to specific pieces of equipment contained within a process unit in the SOCMI, including pumps in light liquid service; compressors; pressure relief devices in gas/vapor, light liquid or heavy liquid service; sampling connection systems; open-ended valves or lines; valves in gas/vapor and light liquid service;

pumps and valves in heavy liquid service; and flanges and other connectors.

In the Administrator's opinion, VOC emissions from equipment leaks in the SOCMI cause or contribute to air pollution that may reasonably be anticipated to endanger public health or welfare. Therefore, New Source Performance Standards have been promulgated for this source category as required under section 111 of the Clean Air Act.

Owners or operators of the affected facilities described must make the following one time only reports: notification of the date of construction or reconstruction, notification of the anticipated and actual date of startup, notification of any physical or operational change to an existing facility which may increase the emission rate of any air pollutant to which the standard applies, and the unit identification and number of components subject to the standards. All semiannual reports are to include: process unit identification, number of components leaking and not repaired, dates of process unit shutdowns, and the revisions to items submitted in the initial semiannual report. The source is also required to notify the Administrator of the election to use an alternative standard for valves ninety days before implementing the provision.

An Agency may not conduct or sponsor, and a person is not required to respond to a collection of information unless it displays a currently valid OMB control number. The OMB control numbers for EPA's regulations are listed in 40 CFR part and 48 CFR Chapter 15. The **Federal Register** document required under 5 CFR 1320.8(d), soliciting comments on this collection of information was published on 01/05/99 (64 FR 499). No comments were received.

Burden Statement: The annual public reporting and recordkeeping burden for this collection of information is estimated to average 60 hours per response. Burden means the total time, effort, or financial resources expended by persons to generate, maintain, retain, or disclose or provide information to or for a Federal agency. This includes the time needed to review instructions; develop, acquire, install, and utilize technology and systems for the purposes of collecting, validating, and verifying information, processing and maintaining information, and disclosing and providing information; adjust the existing ways to comply with any previously applicable instructions and requirements; train personnel to be able to respond to a collection of information; search data sources; complete and review the collection of information; and transmit or otherwise disclose the information.

Respondents/Affected Entities: Owners or operators in the Synthetic Organic Chemicals Manufacturing Industry.

Estimated No. of Respondents: 3228.

Frequency of Response: Semiannual.

Estimated Total Annual Burden on Respondents: 302,881 hours.

Estimated Total Annualized Capital and O&M Costs: $1,223,000.

Send comments on the Agency's need for this information, the accuracy of the provided burden estimates, and any suggested methods for minimizing respondent burden, including through the use of automated collection techniques to the following addresses. Please refer to EPA ICR No. 0662.06 and OMB Control No. 2060–0012 in any correspondence.

Ms. Sandy Farmer, U.S. Environmental Protection Agency, Office of Policy, Regulatory Information Division (2137), 401 M Street, SW, Washington, DC 20460; and

Office of Information and Regulatory Affairs, Office of Management and Budget, Attention: Desk Officer for EPA, 725 17th Street, NW, Washington, DC 20503.

Dated: May 5, 1999.

Richard T. Westlund,

Acting Director, Regulatory Information Division.

[FR Doc. 99–11832 Filed 5–10–99; 8:45 am]

BILLING CODE 6560–50–P

ENVIRONMENTAL PROTECTION AGENCY

[FRL–6340–2]

Acid Rain Provisions

AGENCY: Environmental Protection Agency (EPA).

ACTION: Notice.

SUMMARY: EPA today announces the allocation of allowances to small diesel refineries for desulfurization of fuel during 1998. The eligibility for and calculation of allowances to small diesel refineries is in accordance with section 410(h) of the Clean Air Act, implemented at 40 CFR part 73, subpart G.

FOR FURTHER INFORMATION CONTACT: Kenon Smith, EPA Acid Rain Division (6204J), 401 M St., SW, Washington DC; telephone (202) 564–9164.

SUPPLEMENTARY INFORMATION:

EPA's Acid Rain Program was established by Title IV of the Clean Air Act Amendments of 1990 (CAAA) to reduce acid rain in the continental United States. The Acid Rain Program will achieve a 50 percent reduction in sulfur dioxide (SO_2) emissions from utility units. The SO_2 reduction program is a flexible market-based approach to environmental management. As part of this approach, EPA allocates ''allowances'' to affected utility units. Each allowance is a limited authorization to emit up to one ton of SO_2. At the end of each calendar year, each unit must hold allowances in an amount equal to or greater than its SO_2 emissions for the year. Allowances may be bought, sold, or transferred between utilities and other interested parties. Those units whose annual emissions are likely to exceed their allocations may install control technologies or switch to cleaner fuels to reduce SO_2 emissions or obtain additional allowances.

Section 410(h) of the Clean Air Act provides allowances for small diesel refineries that desulfurize diesel fuel from October 1, 1993 through December 31, 1999. Small refineries are not otherwise affected by the Acid Rain Program and do not need the allowances to comply with any provision of the Clean Air Act. Thus, the allowances serve as a financial benefit to small diesel refineries desulfurizing diesel fuel.

The following table lists the allowances allocated to eligible small diesel refineries for desulfurization in 1998. A total of 25,617 allowances are allocated to 16 refiners. These allowances have a compliance year of 1999.

Refiner	Refinery name or location	Allocation
Big West Oil	Flying J, Utah	1,500
Cenex	Laurel, Montana	1,500
Frontier	Cheyenne, Wyoming	1,500
Giant	Giant	1,350
	Ciniza, New Mexico	1,475
Golden Bear	Oildale, California	142

Refiner	Refinery name or location	Allocation
Holly	Lea, New Mexico	1,500
	Navajo, New Mexico	500
	Montana	289
Hunt	Tuscaloosa, Alabama	1,386
Inland	Woods Cross, Utah	564
Kern	Bakersfield, California	1,500
La Gloria	Tyler, Texas	1,500
Lion	El Dorado, Arkansas	1,500
Pennzoil	Atlas	1,500
	Rasville	470
Pride	Abilene, Texas	238
Sinclair	Little America, Wyoming	1,500
	Sinclair, Wyoming	1,500
	Tulsa, Oklahoma	1,500
U.S. Oil & Refining	Tacoma, Washington	1,056
Wyoming Refining	New Castle, Wyoming	647

Requests for allowances for desulfurization during 1999 are due no later than April 1, 2000. Allowances allocated in 2000 will have a compliance year of 2000.

Dated: April 28, 1999.

Brian J. McLean,

Director, Acid Rain Division.

[FR Doc. 99–11830 Filed 5–10–99; 8:45 am]

BILLING CODE 6560–50–P

ENVIRONMENTAL PROTECTION AGENCY

[FRL–6340–5]

Clean Air Act Operating Permit Program; Petition for Objection to State Operating Permit for Roosevelt Regional Landfill Regional Disposal Company, Klickitat County, Washington

AGENCY: Environmental Protection Agency (EPA).

ACTION: Notice of final order on petition to object to state operating permit.

SUMMARY: Pursuant to Clean Air Act section 505(b)(2) and 40 CFR 70.8(d), the EPA Administrator is hereby denying a petition to object to a state operating permit issued by the Washington Department of Ecology to Roosevelt Regional Landfill, Regional Disposal Company, Klickitat County, Washington. This order constitutes final action on the petition submitted by TPS Technologies, Inc. Pursuant to section 505(b)(2) of the Clean Air Act (''Act''), petitioner may seek judicial review in the United States Court of Appeals for the appropriate circuit within 60 days of this decision under section 307 of the Act.

ADDRESSES: Copies of the final order, the petition and all pertinent information relating thereto are on file at the following location: Environmental Protection Agency, Region X, Office of Air Quality, 1200 Sixth Avenue, Seattle, Washington, 98101. The final order is also available electronically at the following address: http://www.epa.gov/ttn/oarpg/t5sn.html

FOR FURTHER INFORMATION CONTACT: Elizabeth Waddell, Office of Air Quality, EPA Region X, telephone (206) 553–4303, e-mail waddell.elizabeth@epa.gov. Interested parties may also contact the Washington Department of Ecology, Central Regional Office, 15 West Yakima, Suite 200, Yakima, Washington 98902–3401.

SUPPLEMENTARY INFORMATION: The Clean Air Act affords EPA the opportunity for a 45-day period to review, and object to as appropriate, operating permits proposed by State permitting authorities. Section 505(b)(2) of the Act authorizes any person to petition the EPA Administrator within 60 days after the expiration of this review period to object to State operating permits if EPA has not done so. Petitions must be based only on objections to the permit that were raised with reasonable specificity during the public comment period provided by the State, unless the petitioner demonstrates that it was impracticable to raise these issues during the comment period or the grounds for the issues arose after this period.

TPS Technologies, Inc. submitted a petition to the Administrator on February 26, 1999, seeking EPA's objection to the operating permit issued to Roosevelt Regional Landfill, Regional Disposal Company. The petitioner maintains that the Roosevelt Landfill operating permit is inconsistent with the Act because the permit fails to: (1) Adequately identify all emissions units at this municipal solid waste landfill; (2) adequately calculate emissions of volatile organic compounds from the handling of petroleum contaminated soil and the use of such soil as daily cover; (3) explain the basis for establishing different types of controls on petroleum contaminated soil at two similar landfill facilities; and (4) reflect the comments of EPA Region X's new source review (''NSR'') personnel regarding controls on petroleum contaminated soil, to reflect that the facility is either currently out of compliance with NSR requirements or will be subject to NSR in two years. The order denying this petition explains the reasons behind EPA's conclusion that petitioner has failed to demonstrate that the Roosevelt Regional Landfill permit does not assure compliance with the Clean Air Act on the grounds raised.

Dated: May 5, 1999.

Carol M. Browner,

Administrator.

[FR Doc. 99–11833 Filed 5–10–99; 8:45 am]

BILLING CODE 6560–50–P

ENVIRONMENTAL PROTECTION AGENCY

[FRL–6339–9]

National Advisory Council for Environmental Policy and Technology Reinvention Criteria Committee; Public Meeting

AGENCY: Environmental Protection Agency (EPA).

ACTION: Notice of public meeting.

SUMMARY: Under the Federal Advisory Committee Act, Public Law 92–463, EPA gives notice of a meeting of the National Advisory Council for Environmental Policy and Technology's (NACEPT) Reinvention Criteria Committee. NACEPT provides advice and recommendations to the Administrator of EPA on a broad range of environmental policy issues.

The NACEPT Reinvention Criteria Committee (RCC) has been asked to help the Agency understand how incentives can be used most successfully to inspire firms, companies, communities, and individuals to go beyond mere compliance with existing regulations and to begin the process of addressing outstanding environmental problems. In particular, the committee is focusing on the following questions:

- What opportunities exist for EPA to use incentives to promote environmental stewardship in industry? In local communities? In the general public?
- How can EPA evaluate the effectiveness of incentives to encourage environmental stewardship that leads to improved environmental results? How can EPA measure the impact that incentives have on public confidence? What criteria should be used to decide whether the use of incentives is appropriate?
- How can the concept of performance ladders be used to tailor incentives most effectively?

This meeting is being held to provide the EPA with perspectives from representatives of state, and local governments, environmental organizations, academia, industry, and NGOs.

DATES: The RCC will hold a 1½-day public meeting at the Doyle Hotel, located at 1500 New Hampshire Avenue, NW. in Washington, DC on Monday June 28, from 1:00pm to 5:30pm and Tuesday June 29, 1999 from 8:30am to 5:00pm.

ADDRESSES: Materials or written comments may be transmitted to the committee through Gwendolyn Whitt, Designated Federal Officer, NACEPT RCC, U.S. EPA, Office of Cooperative Environmental Management (1601F), 401 M Street, SW., Washington, DC 20460. There will also be an opportunity for the public to make comments directly to the committee during the first day of the meeting. Requests to make public comments must be submitted no later than June 18,1999 to Gwendolyn Whitt, at the address above or faxed to (202) 260–6882.

FOR FURTHER INFORMATION CONTACT: Gwendolyn Whitt, Designated Federal Officer, NACEPT, at (202) 260–9484.

Dated: May 3, 1999.

Gordon Schisler,

Deputy Director, Office of Cooperative Environmental Management.

[FR Doc. 99–11831 Filed 5–10–99; 8:45 am]

BILLING CODE 6560–50–P

ENVIRONMENTAL PROTECTION AGENCY

[OPPTS–00269; FRL–6080–8]

Forum on State and Tribal Toxics Action (FOSTTA); June Meeting Canceled

AGENCY: Environmental Protection Agency (EPA).

ACTION: Notice.

SUMMARY: The Forum on State and Tribal Toxics Action (FOSTTA) will not meet in June 1999. In March, the FOSTTA Coordinating Committee decided to forgo the June meeting due to severe cuts to the Office of Pollution Prevention and Toxics (OPPT) fiscal year 1999 budget. In the past, three meetings were funded annually and were typically held in October, March, and June. The next meeting of FOSTTA will be October 18–19, 1999 at a new location, the Key Bridge Marriott Hotel in Arlington, VA. OPPT will issue a **Federal Register** notice in late September to announce the October meeting.

DATES: As part of the effort to increase tribal representation in FOSTTA, the Tribal Affairs Work Group of FOSTTA will meet on June 28, 1999, from 8 a.m. to 5 p.m. and on June 29, 1999, from 8 a.m. to noon. The focus of the meeting will be on orientation and organizational matters with the Tribal representatives who attended the March FOSTTA meeting. The Tribal Affairs Work Group deals specifically with issues of concern to the Indians.

ADDRESSES: The Tribal Affairs Work Group of FOSTTA will meet at the Key Bridge Marriott Hotel, 1401 Lee Highway, Arlington, VA.

FOR FURTHER INFORMATION CONTACT: Phil Robinson, Chief of the Liaison Branch, Environmental Assistance Division (7408), Office of Pollution Prevention and Toxics, Environmental Protection Agency, 401 M St., SW., Washington, DC 20460; telephone: (202) 260–3910; e-mail: robinson.phil@epa.gov.

SUPPLEMENTARY INFORMATION: FOSTTA, a group of state and tribal toxics environmental managers, is intended to foster the exchange of toxics-related program and enforcement information among the states, tribes, EPA's Office of Prevention, Pesticides and Toxic Substances (OPPTS, and the Office of Enforcement and Compliance Assurance (OECA). FOSTTA currently consists of the Coordinating Committee, four issue-specific projects, and two work groups. The projects and work groups are the: Toxic Release Inventory Project, Pollution Prevention Project, Chemical Management Project, Lead (Pb) Project, and the Community-Based Environment Work Group and the Tribal Affairs Work Group.

List of Subjects

Environmental protection.

Dated: April 30, 1999.

Christine M. Augustyniak,

Acting Director, Environmental Assistance Division, Office of Pollution Prevention and Toxics.

[FR Doc. 99–11836 Filed 5–10–99; 8:45 am]

BILLING CODE 6560–50–F

FARM CREDIT ADMINISTRATION

Sunshine Act Meeting; Farm Credit Administration Board; Regular Meeting

AGENCY: Farm Credit Administration.

SUMMARY: Notice is hereby given, pursuant to the Government in the Sunshine Act (5 U.S.C. 552b(e)(3)), of the forthcoming regular meeting of the Farm Credit Administration Board (Board).

DATE AND TIME: The regular meeting of the Board will be held at the offices of the Farm Credit Administration in McLean, Virginia, on May 13, 1999, from 9:00 a.m. until such time as the Board concludes its business.

FOR FURTHER INFORMATION CONTACT: Vivian L. Portis, Secretary to the Farm Credit Administration Board, (703) 883–4025, TDD (703) 883–4444.

ADDRESSES: Farm Credit Administration, 1501 Farm Credit Drive, McLean, Virginia 22102–5090.

SUPPLEMENTARY INFORMATION: Parts of this meeting of the Board will be open to the public (limited space available), and parts of this meeting will be closed to the public. In order to increase the accessibility to Board meetings, persons requiring assistance should make arrangements in advance. The matters to be considered at the meeting are:

Open Session

A. Approval of Minutes

—March 23, 1999 (Open)

B. Report

—FCS Building Association Quarterly Report

C. New Business Regulation

—Investment Management Regulation [Subpart E of Part 615 and § 615.5174] (Final)

Closed Session*

A. Report

—OSMO Report

* Session Closed—Exempt pursuant to 5 U.S.C. 552b(c) (8) and (9).

Dated: May 6, 1999.

Vivian L. Portis,

Secretary, Farm Credit Administration Board.

[FR Doc. 99–11986 Filed 5–7–99; 2:59 pm]

BILLING CODE 6705–01–P

FEDERAL COMMUNICATIONS COMMISSION

Notice of Public Information Collections Being Reviewed by the Federal Communications Commission.

April 30, 1999.

SUMMARY: The Federal Communications Commissions, as part of its continuing effort to reduce paperwork burden invites the general public and other Federal agencies to take this opportunity to comment on the following information collection, as required by the Paperwork Reduction Act of 1995, Public Law 104–13. An agency may not conduct or sponsor a collection of information unless it displays a currently valid control number. No person shall be subject to any penalty for failing to comply with a collection of information subject to the Paperwork Reduction Act (PRA) that does not display a valid control number. Comments are requested concerning (a) whether the proposed collection of information is necessary for the proper performance of the functions of the Commission, including whether the information shall have practical utility; (b) the accuracy of the Commission's burden estimate; (c) ways to enhance the quality, utility, and clarity of the information collected; and (d) ways to minimize the burden of the collection of information on the respondents, including the use of automated collection techniques or other forms of information technology.

DATES: Written comments should be submitted on or before July 12, 1999. If you anticipate that you will be submitting comments, but find it difficult to do so within the period of time allowed by this notice, you should advise the contact listed below as soon as possible.

ADDRESSES: Direct all comments to Les Smith, Federal Communications Commission, 445 12th Street, S.W., Room 1-A804, Washington, DC 20554 or via the Internet to lesmith@fcc.gov.

FOR FURTHER INFORMATION CONTACT: For additional information or copies of the information collections contact Les Smith at (202) 418–0217 or via the Internet at lesmith@fcc.gov.

SUPPLEMENTARY INFORMATION:

OMB Control Number: 3060–0848.

Title: Deployment of Wireline Services Offering Advanced Telecommunications Capability, CC Docket No. 98–147, FCC 99–48, First Report and Order and FNPRM.

Form Number: N/A.

Type of Review: Extension of a currently approved collection.

Respondents: Business or other for-profit entities.

Number of Respondents: 1,400 respondents.

Frequency of Response: On occasion reporting requirements; Third party disclosures.

Estimated Time Per Response: 4.5 hours (avg.).

Total Annual Burden: 6,300 hours.

Total Annual Cost: $0.

Needs and Uses: The rules adopted in the 1st R&O require incumbent LECs to make new collocation arrangements, including cageless and shared collocation, available to competing carriers. The Order also adopts certain spectrum compatibility and management rules prohibiting a LEC from denying a carrier's request to deploy technology that is presumed acceptable for deployment. Among other things, whenever an incumbent LEC objects to collocation of equipment by a requesting telecommunications carrier for the purposes within the scope of section 251(c)(6) of the Act, the incumbent LEC shall prove to the state commission that the equipment will not be actually used by the telecommunications carrier for the purpose of obtaining interconnection or access to unbundled network elements. An incumbent that denies collocation of a competitor's equipment, citing safety standards, must provide to the competitive LEC within 5 business days a list of all equipment that the incumbent LEC locates within the premises in question, together with an affidavit attesting that all of that equipment meets or exceeds the safety standard that the incumbent LEC contends the competitor's equipment fails to meet. Upon request, an incumbent LEC must submit to the requesting carrier within ten days of the submission of the request a report indicating the incumbent LEC's available collocation space in a particular LEC premises. All of the collections will be used by the Commission and by competitive carriers to facilitate the deployment of advanced data services and to implement section 706 of the Communications Act of 1934, as amended.

OMB Control Number: 3060–0704.

Title: Policy and Rules Concerning the Interstate, Interexchange Marketplace: Implementation of Section 254(g) of the Communications Act of 1934, as amended, CC Docket No. 96–61.

Form Number: N/A.

Type of Review: Revision of a currently approved collection.

Respondents: Business or other for-profit entities.

Number of Respondents: 519 respondents.

Estimated Time Per Response: 146.2 hours per response (avg.).

Frequency of Response: On occasion reporting requirements; Third party disclosure.

Total Annual Burden: 75,895 hours.

Total Annual Cost: $0.

Needs and Uses: In CC Docket No. 96–61, the Commission reinstates the public disclosure requirement and also requires that nondominant interexchange carriers that have Internet websites past this information on-line in a timely and easily accessible manner. The information collection requirements must be disclosed to the public to ensure that consumers have access to the information they need to select a telecommunications carrier and to bring to the Commission attention possible violations of the Communications Act without a specific public disclosure requirement.

Federal Communications Commission.

Magalie Roman Salas,

Secretary.

[FR Doc. 99–11790 Filed 5–10–99; 8:45 am]

BILLING CODE 6712–01–P

FEDERAL COMMUNICATIONS COMMISSION

Notice of Public Information Collections Being Reviewed by the Federal Communications Commission for Extension Under Delegated Authority 5 CFR 1320 Authority, Comments Requested.

April 30, 1999.

SUMMARY: The Federal Communications Commission, as part of its continuing effort to reduce paperwork burden invites the general public and other Federal agencies to take this opportunity to comment on the following information collection(s), as required by the Paperwork Reduction Act of 1995, Public Law 104–13. An agency may not conduct or sponsor a collection of information unless it displays a currently valid control number. No person shall be subject to any penalty for failing to comply with

a collection of information subject to the Paperwork Reduction Act (PRA) that does not display a valid control number. Comments are requested concerning (a) whether the proposed collection of information is necessary for the proper performance of the functions of the Commission, including whether the information shall have practical utility; (b) the accuracy of the Commissions burden estimates; (c)ways to enhance the quality, utility, and clarity of the information collected and (d) ways to minimize the burden of the collection of information on the respondents, including the use of automated collection techniques or other forms of information technology.

DATES: Written comments should be submitted on or before July 12, 1999. If you anticipate that you will be submitting comments, but find it difficult to do so within the period of time allowed by this notice, you should advise the contact listed below as soon as possible.

ADDRESSES: Direct all comments to Les Smith, Federal Communications, Room 1-A804, 445 Twelfth St., S.W., Washington, DC 20554 or via the Internet to lesmith@fcc.gov.

FOR FURTHER INFORMATION CONTACT: For additional information or copies of the information collections contact Les Smith at (202) 418–0217 or via the Internet at lesmith@fcc.gov.

SUPPLEMENTARY INFORMATION:

OMB Control Number: 3060–0325.

Title: Section 80.605, U.S. Coast Guard Coordination.

Form Number: N/A.

Type of Review: Extension of a currently approved collection.

Respondents: Individuals or households; and Business or other for-profit entities.

Number of Respondents: 47.

Estimated Time Per Response: 1 hour.

Frequency of Response: On occasion reporting requirements.

Total Annual Burden: 52 hours.

Total Annual Cost: $1,134.

Needs and Uses: Section 80.605 is needed to assure that no hazard to marine navigation will result from the grant of applications for non-selectable transponders and shore based radionavigation aids. If this collection was not conducted, stations posing a hazard to marine navigation could be licensed inadvertently and/or long delays in the processing of applications could result due to the necessity for coordination between the FCC, Coast Guard and the applicant.

OMB Approval Number: 3060–0556.

Title: Section 80.1061, Special requirements for 406.025 MHz EPIRBs.

Form Number: N/A.

Type of Review: Extension of a currently approved collection.

Respondents: Individuals or households; and Businesses or other for-profit entities.

Number of Respondents: 9,500.

Estimated Time Per Response: 0.084 hours.

Frequency of Response: On occasion reporting requirements.

Total Annual Burden: 798 hours.

Total Annual Cost: None.

Needs and Uses: Section 80.1061 is needed to require owners of 406.025 MHz Emergency Position Indicating Radiobeacons (EPIRBs) to register information such as name, address, and type of vessel with the National Oceanic and Atmospheric Administration (NOAA). If the collection were not conducted, NOAA would not have access to this information which would increase the time needed to complete a search and rescue operation.

OMB Control Number: 3060–0554.

Title: Section 87.199, Special requirements for 406.025 MHz ELTs.

Form Number: N/A.

Type of Review: Extension of a currently approved collection.

Respondents: Individuals or households; and Businesses or other for-profit entities.

Number of Respondents: 500.

Estimated Time Per Response: 0.084 hours.

Frequency of Response: On occasion reporting requirements.

Total Annual Burden: 42 hours.

Total Annual Cost: None.

Needs and Uses: Section 87.199 is needed to require owners of 406.025 MHz Emergency Locator Transmitters (ELTs) to register information such as name, address, and type of vessel with the National Oceanic and Atmospheric Administration (NOAA). If the collection were not conducted, NOAA would not have access to this information which would increase the time needed to complete a search and rescue operation.

Federal Communications Commission.

Magalie Roman Salas,

Secretary.

[FR Doc. 99–11792 Filed 5–10–99; 8:45 am]

BILLING CODE 6712–01–P

FEDERAL COMMUNICATIONS COMMISSION

Notice of Public Information Collection(s) Being Reviewed by the Federal Communications Commission

April 26, 1999.

SUMMARY: The Federal Communications Commission, as part of its continuing effort to reduce paperwork burden invites the general public and other Federal agencies to take this opportunity to comment on the following information collection, as required by the Paperwork Reduction Act of 1995, Public Law 104–13. An agency may not conduct or sponsor a collection of information unless it displays a currently valid control number. No person shall be subject to any penalty for failing to comply with a collection of information subject to the Paperwork Reduction Act (PRA) that does not display a valid control number. Comments are requested concerning (a) whether the proposed collection of information is necessary for the proper performance of the functions of the Commission, including whether the information shall have practical utility; (b) the accuracy of the Commission's burden estimate; (c) ways to enhance the quality, utility, and clarity of the information collected; and (d) ways to minimize the burden of the collection of information on the respondents, including the use of automated collection techniques or other forms of information technology.

DATES: Written comments should be submitted on or before July 12, 1999. If you anticipate that you will be submitting comments, but find it difficult to do so within the period of time allowed by this notice, you should advise the contact listed below as soon as possible.

ADDRESSES: Direct all comments to Les Smith, Federal Communications Commission, 445 12th Street, S.W., Room 1–A804, Washington, DC 20554 or via the Internet to lesmith@fcc.gov.

FOR FURTHER INFORMATION CONTACT: For additional information or copies of the information collections contact Les Smith at (202) 418–0217 or via the Internet at lesmith@fcc.gov.

SUPPLEMENTARY INFORMATION:

OMB Control Number: 3060–XXXX.

Title: Part 18—Regulations for RF Lighting Devices (Sec. 18.307) (OET Doc. 98–42).

Form Number: N/A.

Type of Review: New collection.

Respondents: Individuals or households, Not-for-profit institutions; Business or other for-profit; and State, Local or Tribal Government.

Number of Respondents: 30.

Estimated Time per Response: 1 hour.

Frequency of Response: Recordkeeping; On occasion reporting requirements.

Total Annual Burden: 30 hours.

Total Annual Cost: None.

Needs and Uses: The collection of information are third party requirements made necessary by Section 18.307 of the Commission Rules governing regulations for radio frequency (RF) lighting devices. The Commission will require that manufacturers of RF lighting devices must provide an advisory statement either on the product packaging or with other user documentation, similar to the following: This product may cause interference to radio equipment and should not be installed near maritime safety communications equipment or other critical navigation or communication equipment operating between 0.45–30 MHz.

Federal Communications Commission.

Magalie Roman Salas,

Secretary.

[FR Doc. 99–11793 Filed 5–10–99; 8:45 am]

BILLING CODE 6712–01–P

FEDERAL COMMUNICATIONS COMMISSION

Notice of Public Information Collection(s) Being Submitted to OMB for Review and Approval.

April 29, 1999.

SUMMARY: The Federal Communications Commissions, as part of its continuing effort to reduce paperwork burden invites the general public and other Federal agencies to take this opportunity to comment on the following information collection, as required by the Paperwork Reduction Act of 1995, Public Law 104–13. An agency may not conduct or sponsor a collection of information unless it displays a currently valid control number. No person shall be subject to any penalty for failing to comply with a collection of information subject to the Paperwork Reduction Act (PRA) that does not display a valid control number. Comments are requested concerning (a) whether the proposed collection of information is necessary for the proper performance of the functions of the Commission, including whether the information shall have practical utility; (b) the accuracy of the Commission's burden estimate; (c) ways to enhance the quality, utility, and clarity of the information collected; and (d) ways to minimize the burden of the collection of information on the respondents, including the use of automated collection techniques or other forms of information technology.

DATES: Written comments should be submitted on or before June 10, 1999. If you anticipate that you will be submitting comments, but find it difficult to do so within the period of time allowed by this notice, you should advise the contact listed below as soon as possible.

ADDRESSES: Direct all comments to Les Smith, Federal Communications Commission, Room 1–A804, 445 12th Street, S.W., Washington, DC 20554 or via the Internet to lesmith@fcc.gov.

FOR FURTHER INFORMATION CONTACT: For additional information or copies of the information collections contact Les Smith at (202) 418–0217 or via the Internet at lesmith@fcc.gov.

SUPPLEMENTARY INFORMATION:

OMB Control Number: 3060–0084.

Title: Ownership Report for Noncommercial Educational Station.

Form Number: FCC 323–E.

Type of Review: Revision of a currently approved collection.

Respondents: Not-for-profit institutions.

Number of Respondents: 2,368.

Estimate Time Per Response: 30 mins. (0.5 hours).

Frequency of Response: Recordkeeping; Biennially; On occasion; and Upon renewal reporting requirements.

Total Annual Burden: 1,184 hours.

Total Annual Costs: 1,658,000.

Needs and Uses: FCC Form 323–E is filed by a licensee/permittee of noncommercial AM, FM, and TV stations when the original construction permit is granted; on the date the licensee/permittee applies for a station license; in conjunction with the station's renewal application; and every two years thereafter. The data are used by FCC staff to determine if a licensee/permittee is abiding by the FCC's multiple ownership rules.

OMB Control Number: 3060–0405.

Title: Application for Authority to Construct or Make Changes in an FM Translator or FM Booster Station.

Form Number: FCC 349.

Type of Review: Revision of a currently approved collection.

Respondents: Business or other for-profit entities.

Number of Respondents: 1,000.

Estimate Time Per Response: 3.0 hours.

Frequency of Response: Recordkeeping; On occasion reporting requirements; Third party disclosure.

Total Annual Burden: 3,000 hours.

Total Annual Costs: 2,398,000.

Needs and Uses: FCC Form 349 is used to apply for authority to construct a new FM transitor or FM booster broadcast station, or to make changes in existing facilities. The data are used by FCC staff to ensure that applicants meet basic statutory requirements and will not cause interference to other licensed broadcast services.

Federal Communications Commission.

Magalie Roman Salas,

Secretary.

[FR Doc. 99–11791 Filed 5–10–99; 8:45 am]

BILLING CODE 6712–01–P

FEDERAL COMMUNICATIONS COMMISSION

Notice of Public Information Collection(s) Being Submitted to OMB for Review and Approval

May 3, 1999.

SUMMARY: The Federal Communications Commission, as part of its continuing effort to reduce paperwork burden invites the general public and other Federal agencies to take this opportunity to comment on the following information collection, as required by the Paperwork Reduction Act of 1995, Public Law 104–13. An agency may not conduct or sponsor a collection of information unless it displays a currently valid control number. No person shall be subject to any penalty for failing to comply with a collection of information subject to the Paperwork Reduction Act (PRA) that does not display a valid control number. Comments are requested concerning (a) whether the proposed collection of information is necessary for the proper performance of the functions of the Commission, including whether the information shall have practical utility; (b) the accuracy of the Commission's burden estimate; (c) ways to enhance the quality, utility, and clarity of the information collected; and (d) ways to minimize the burden of the collection of information on the respondents, including the use of automated collection techniques or other forms of information technology.

DATES: Written comments should be submitted on or before June 10, 1999. If you anticipate that you will be submitting comments, but find it difficult to do so within the period of time allowed by this notice, you should advise the contact listed below as soon as possible.

ADDRESSES: Direct all comments to Les Smith, Federal Communications Commission, Room 1–A804, 445 12th Street, S.W., Washington, DC 20554 or via the Internet to lesmith@fcc.gov.

FOR FURTHER INFORMATION CONTACT: For additional information or copies of the information collections contact Les

Smith at (202) 418–0217 or via the Internet at lesmith@fcc.gov.

SUPPLEMENTARY INFORMATION:

OMB Control Number: 3060–0688.

Title: Abbreviated Cost-of-Service Filing for Cable Network Upgrades.

Form Number: FCC Form 1235.

Type of Review: Extension of a currently approved collection.

Respondents: Business and other for-profit entities; State, local or tribal governments.

Number of Respondents: 100.

Estimated Time Per Response: 10–20 hours.

Frequency of Response: On occasion reporting requirements.

Total Annual Burden: 1,500 hours.

Total Annual Cost: $200.

Needs and Uses: FCC Form 1235 is an abbreviated cost of service filing for significant network upgrades that allows cable operators to justify rate increases related to capital expenditures used to improve rate-regulated cable services. FCC Form 1235 is reviewed by the cable operator's respective local franchise authority.

Federal Communications Commission.

Magalie Roman Salas,

Secretary.

[FR Doc. 99–11794 Filed 5–10–99; 8:45 am]

BILLING CODE 6712–01–P

FEDERAL COMMUNICATIONS COMMISSION

[CC Docket No. 96–128; DA 99–841]

Comments Requested To Update and Refresh Record for the Inmate Payphone Service Proceeding

AGENCY: Federal Communications Commission.

ACTION: Notice; comments requested.

SUMMARY: This document seeks comment to update and refresh the record on inmate issues in the Pay Telephone Reclassification and Compensation proceeding.

DATES: Comments are due on or before June 21, 1999, and reply comments are due on or before July 21, 1999.

ADDRESSES: Federal Communications Commission, Office of the Secretary, 445 12th Street, SW, TW–325, Washington, DC 20554. One copy of each filing must be sent also to International Transcription Services, Inc. (ITS), 1231 20th Street, NW, Washington, DC 20036, (202) 857–3800, and one copy to the Chief, Competitive Pricing Division, Common Carrier Bureau, Federal Communications Commission, 445 12th Street, SW, Room 5–A227, Washington, DC 20554.

FOR FURTHER INFORMATION CONTACT: Lynne Milne or Renee Terry of the Competitive Pricing Division, Common Carrier Bureau, (202) 418–1520; TTY (202) 418–0484.

SUPPLEMENTARY INFORMATION: This is a summary of a Public Notice that was released on May 6, 1999 (DA 99–841). The full text of the Public Notice is available for inspection and copying during normal business hours in the FCC Reference Information Center, 445 12th Street, SW, Room CY–A257, Washington, DC 20554. The complete text of this Public Notice also may be purchased from the Commission's duplicating contractor, ITS, 1231 20th Street, NW, Washington, DC 20036, (202) 857–3800. Alternative formats (computer diskette, large print, audio cassette and Braille) are available to persons with disabilities by contacting Martha Contee at (202) 418–0260, TTY (202) 418–2555, or at mcontee@fcc.gov.

1. On January 30, 1998, the United States Court of Appeals for the District of Columbia Circuit granted the Federal Communications Commission's (Commission) motion for voluntary remand of the inmate issues raised on reconsideration of the Commission's decision in the *Implementation of the Pay Telephone Reclassification and Compensation Provisions of the Telecommunications Act of 1996.* In this Public Notice, the Common Carrier Bureau invites parties to update their comments and refresh the record in order to provide a full and up–to–date record of the inmate issues in this proceeding.

2. We seek comment on state–imposed rate ceilings. The Inmate Calling Service Providers Coalition (Coalition) requests that the Commission preempt each state ceiling, arguing that state–imposed rate ceilings on intrastate inmate calls prevent payphone providers who serve correctional facilities from recovering the costs of doing business in the correctional facility environment in violation of section 276 of the Telecommunications Act of 1996 (1996 Act). To ensure that the Commission has before it up–to–date data regarding state–imposed ceilings on payphone providers who serve correctional facilities and information regarding the circumstances under which the ceilings apply, we invite the parties to refresh the record regarding the number of states that currently have established such ceilings, the amount of each state's ceiling, and the states, if any, where incumbent local exchange carriers provide services for correctional institutions. In addition, we seek information regarding how the ceilings are applied. For example, please explain whether the ceilings apply to the local call, the operator service charge, or a combination thereof. We also seek information on whether the state–mandated intrastate rate ceilings apply only to correctional facility calls or more generally to all calls made from payphones. Because the Commission's decisions in this proceeding involve a review of state–imposed ceilings, we invite comments from the states on this matter.

3. We seek comment on compensation mechanisms for payphone providers who serve correctional facilities. The Coalition argues that the Commission has failed to prescribe fair compensation to payphone providers who serve correctional facilities in violation of section 276 of the 1996 Act. We invite the parties to update their comments on the compensation mechanism that should be applied to payphone providers who serve correctional facilities. For example, we request that commenters specify a proposed compensation mechanism for payphone providers who serve correctional facilities, if the $0.90 compensation element proposed by the Coalition is not adopted. In addition, we seek comment on whether a national compensation rate for payphone providers who serve correctional facilities should be adopted or whether compensation should be established for federal, state, and local correctional institutions and vary by state; if so, we seek comment on how compensation should be determined.

4. We seek up-to-date information regarding the costs to serve the correctional facilities and the level and nature of bad debt associated with payphone providers who serve correctional facilities. We also seek comment on whether the use of debit cards would mitigate the level of bad debt associated with payphone providers who serve correctional facilities. In particular, we ask what specific factors prohibit the use of debit cards, and if such factors exist in each correctional institution. We also seek comment on whether the incumbent local exchange carriers experience the same type and level of bad debt that the Coalition has suggested in its submissions and we encourage incumbent local exchange carriers to update their comments on this issue.

5. We invite the parties to update their comments to address whether the incumbent local exchange carriers have discontinued all intrastate and interstate subsidies and discrimination with respect to their services for correctional institutions. If not, commenters should

specify the type of subsidy or discrimination that remains.

6. Comments may be filed using the Commission's Electronic Comment Filing System (ECFS) or by filing paper copies. As described in *Electronic Filing of Documents in Rulemaking Proceedings*, 63 FR 24121 (May 1, 1998), comments through the ECFS can be sent as an electronic file via the Internet to <http://www.fcc.gov/e-file/ecfs.html>. In completing the transmittal screen, commenters should include their full name, Postal Service mailing address, and CC Docket No. 96–128. Parties may also submit an electronic comment by Internet e-mail. To get filing instructions for e-mail comments, commenters should send an e-mail to ecfs@fcc.gov, and should include the following words in the body of the message, ''get form <your e-mail address>.'' A sample form and directions will be sent in reply.

7. Parties who choose to file by paper must file an original and four copies of all comments and reply comments. All comments and reply comments should reference CC Docket No. 96–128. Paper comments and reply comments must be filed with the Commission's Secretary, Magalie Roman Salas, Office of the Secretary, Federal Communications Commission, 445—12th Street, SW, TW–A325, Washington, DC 20554. In addition, one copy must be filed with International Transcription Services (ITS), the Commission's duplicating contractor, at its office at 1231 20th Street, NW, Washington, DC 20036, and one copy must be filed with the Chief, Competitive Pricing Division, Common Carrier Bureau, 445—12th Street, SW, Room 5–A227, Washington, DC 20554.

8. Parties submitting diskettes should submit them along with their paper filings to the Commission's Office of the Secretary. Submissions should be on a 3.5 inch diskette formatted in an DOS PC compatible form. The document should be saved into WordPerfect 5.1 for Windows format. The diskette should be submitted in ''read only'' mode. The diskette should be clearly labelled with the party's name, proceeding, type of submission (comment or reply comment), CC Docket No. 96–128, and date of submission.

9. This matter shall be treated as a ''permit-but-disclose'' proceeding in accordance with the Commission's *ex parte* rules at 47 CFR 1.1200, 1.1206. Persons making oral *ex parte* presentations are reminded that memoranda summarizing the presentations must contain summaries of the substance of the presentations and not merely a listing of the subjects discussed. More than a one or two sentence description of the views and arguments presented is generally required by 47 CFR 1.1206(b). Other rules pertaining to oral and written *ex parte* presentations in permit-but-disclose proceedings are set forth in 47 CFR 1.1206(b).

Federal Communications Commission.

Kris A. Monteith,

Deputy Chief, Competitive Pricing Division, Common Carrier Bureau.

[FR Doc. 99–11729 Filed 5–10–99; 8:45 am]

BILLING CODE 6712–01–P

FEDERAL COMMUNICATIONS COMMISSION

Sunshine Act Meeting; Open Commission Meeting, Thursday, May 13, 1999

The Federal Communications Commission will hold an Open Meeting on the subjects listed below on Thursday, May 13, 1999, which is scheduled to commence at 9:30 a.m. in Room TW–C305, at 445 12th Street, SW., Washington, D.C. The Commission will hold an additional Open Meeting on Thursday, May 27, 1999.

Item No, Bureau, and Subject

1—Cable Services—Title: Implementation of Section 304 of the Telecommunications Act of 1996 and Commercial Availability of Navigation Devices (CS Docket No. 97–80). Summary: The Commission will consider an Order on Reconsideration that addresses petitions for reconsideration of the Commission's Report and Order requiring set-top boxes and other navigational devices to be commercially available.

2—Wireless Telecommunications—Title: Revision of the Commission's Rules to Ensure Compatibility with Enhanced 911 Emergency Calling Systems (CC Docket No. 94–102, RM–8143). Summary: The Commission will consider a Second Report and Order concerning ways to improve wireless 911 call completion.

3—Wireless Telecommunications—Title: Service Rules for the 746–764 and 776–794 MHz Bands, and Revisions to Part 27 of the Commission's Rules. Summary: The Commission will consider a Notice of Proposed Rulemaking proposing service rules for the commercial spectrum blocks to be auctioned and licensed in the 746–806 MHz band.

Additional information concerning this meeting may be obtained from Maureen Peratino or David Fiske, Office of Public Affairs, telephone number (202) 418–0500; TTY (202) 418–2555.

Copies of materials adopted at this meeting can be purchased from the FCC's duplicating contractor, International Transcription Services, Inc. (ITS, Inc.) at (202) 857–3800; fax (202) 857–3805 and 857–3184; or TTY (202) 293–8810. These copies are available in paper format and alternative media, including large print/type; digital disk; and audio tape. ITS may be reached by e-mail: its__inc@ix.netcom.com. Their Internet address is http://www.itsi.com.

This meeting can be viewed over George Mason University's Capitol Connection. The Capitol Connection also will carry the meeting live via the Internet. For information on these services call (703) 993–3100. The audio portion of the meeting will be broadcast live on the Internet via the FCC's Internet audio broadcast page at <http://www.fcc.gov/realaudio/>. The meeting can also be heard via telephone, for a fee, from National Narrowcast Network, telephone (202) 966–2211 or fax (202) 966–1770. Audio and video tapes of this meeting can be purchased from Infocus, 341 Victory Drive, Herndon, VA 20170, telephone (703) 834–0100; fax number (703) 834–0111.

Federal Communications Commission.

Magalie Roman Salas,

Secretary.

[FR Doc. 99–12033 Filed 5–7–99; 3:41 pm]

BILLING CODE 6712–01–P

FEDERAL RESERVE SYSTEM

Agency Information Collection Activities: Announcement of Board Approval Under Delegated Authority and Submission to OMB

SUMMARY

Background. Notice is hereby given of the final approval of proposed information collections by the Board of Governors of the Federal Reserve System (Board) under OMB delegated authority, as per 5 CFR 1320.16 (OMB Regulations on Controlling Paperwork Burdens on the Public). Board-approved collections of information are incorporated into the official OMB inventory of currently approved collections of information. Copies of the OMB 83-Is and supporting statements and approved collection of information instrument(s) are placed into OMB's public docket files. The Federal Reserve may not conduct or sponsor, and the respondent is not required to respond to, an information collection that has been extended, revised, or implemented on or after October 1, 1995, unless it displays a currently valid OMB control number.

FOR FURTHER INFORMATION CONTACT: Chief, Financial Reports Section—Mary M. West—Division of Research and Statistics, Board of Governors of the Federal Reserve System, Washington, DC 20551 (202-452-3829)

OMB Desk Officer—Alexander T. Hunt—Office of Information and Regulatory Affairs, Office of Management and Budget, New Executive Office Building, Room 3208, Washington, DC 20503 (202-395-7860)

Final approval under OMB delegated authority of the extension for three years, with revision, of the following reports:

Report title: Annual Report of Foreign Banking Organizations; Foreign Banking Organization Structure Report on U.S. Banking and Nonbanking Activities; Foreign Banking Organization Confidential Report of Operations

Agency form number: FR Y-7; FR Y-7A; FR 2068

OMB control number: 7100-0125

Effective date: December 31, 1999

Frequency: Annual

Reporters: foreign banking organizations

Annual reporting hours: 5,150 hours

Estimated average hours per response: 15.75

Number of respondents: 327

Small businesses are not affected.

General description of report: These information collections are mandatory (12 U.S.C. 1844(c), 3106, and 3108(a)). Upon request from a respondent certain information in the FR Y-7 and FR Y-7A may be given confidential treatment pursuant to the Freedom of Information Act (5 U.S.C. 552(b)(4) and (6)). The FR 2068 is a confidential report of operations that is exempted from public disclosure pursuant to the Freedom of Information Act (5 U.S.C. 552(b)(8) and 12 CFR 261.11(h).

Abstract: The FR Y-7, FR Y-7A, and FR 2068 are annual reports completed by foreign banking organizations that engage in banking in the United States, either indirectly through a subsidiary bank, Edge or agreement corporation, or commercial lending company, or directly through a branch or agency. The FR Y-7 collects financial, managerial, and organizational information on the foreign banking organization. The FR 2068 collects confidential financial and organizational information, which is not collected in the FR Y-7. A foreign banking organization is currently exempt from filing the FR 2068 if it meets certain criteria related to the size and type of its U.S. banking operations. The FR Y-7A collects structural information on the foreign banking organization and its subsidiaries. All of the reports are filed as of the end of the reporter's fiscal year. The information contained in these reports is used by the Federal Reserve System to assess the foreign banking organization's ability to be a continuing source of strength to its U.S. banking operations and to determine compliance with U.S. laws and regulations.

Current Actions: The Federal Reserve is reducing regulatory reporting burden for foreign banking organizations (FBOs) by eliminating the FR 2068 and by reducing and clarifying the amount of information to be reported on the FR Y-7 and FR Y-7A. Most of the information collected in the FR 2068 is now publicly available. The publicly available portion of two of the items currently reported on the FR 2068 will be added to the FR Y-7: (1) financial statements of unconsolidated majority-owned related subsidiaries, and (2) financial data on unconsolidated minority-owned related companies. The most significant changes on the FR Y-7 are the elimination of the information requested on directors and officers, the simplification of the information requested for the organization chart, and the addition of two items currently reported on the FR 2068 as mentioned above. The most significant changes on the FR Y-7A are the simplification of the information requested on securities held through debts previously contracted and on Legal Authority, and the addition of four new items.

The Federal Reserve received two public comment letters from a law firm and a trade association pertaining to the proposed revisions. Both organizations strongly supported the Board's proposal to streamline and reduce the burden associated with these reports. Both commenters also suggested that foreign banking organizations (FBOs) be allowed to include companies not reportable on the FR Y-7 organization chart, for purposes of clarity and retaining a complete record of the FBO's U.S. interest, if the companies are designated as not reportable. The Federal Reserve agrees with this suggestion and has clarified the instructions to allow this option. In addition, both commenters asked for further clarification to the instructions for Report Item 2 of the FR Y-7A, which will be provided later this year in the form of a chart supplementing the instructions.

The trade association also expressed concern about including additional subsidiaries in Report Item 2 of the FR Y-7A, as proposed. The information requested for this item is consistent with the information requested for the organizational chart in Report Item 3 of the FR Y-7. The Federal Reserve needs this information to provide a complete picture of the FBO's organizational structure for purposes of assessing the safety and soundness of the complete organization.

The law firm suggested that the Federal Reserve allow filers for whom required information is not available in accord with their domestic law at April 30 of each year, to submit their entire FR Y-7 filing by June 30 for the fiscal year then-ended. The Federal Reserve needs the data on the current filing system in order to assess the FBO's ability to be a continuing source of strength to its U.S. banking operations and to determine compliance with U.S. laws and regulations.

The law firm also suggested several modifications to the Facsimile Confirmation Report which is sent to the institution each year after their initial FR Y-7A filing for verification. The Federal Reserve will review the Facsimile Confirmation Report and will consider incorporating the law firm's suggestions after the year 2000.

Finally, the law firm commented that the estimated burden hours per response are too low. While the Federal Reserve realizes that large organizations may take much more than 15.75 hours to complete this information, small companies with limited U.S. presence require much less time. This amount represents an average for all respondents.

Discontinuance of the following report under OMB delegated authority:

Report title: Notification Pursuant to Section 211.23(h) of Regulation K on Acquisitions by Foreign Banking Organizations

Agency form number: FR 4002

OMB control number: 7100-0110

Frequency: Event-generated

Reporters: foreign banking organizations

Annual reporting hours: 80

Estimated average hours per response: 0.50

Number of respondents: 160

Small businesses are not affected.

General description of report: This information collection is mandatory (12 U.S.C. 1844(c), 3106, and 3108(a)). Upon request from a respondent certain information in the FR 4002 may be given confidential treatment pursuant to the Freedom of Information Act (5 U.S.C. 552(b)(4) and (6)).

Abstract: The FR 4002 is an event-generated information collection that foreign banking organizations are required to submit, in a letter to the appropriate Federal Reserve Bank. The information is due within thirty days of the end of a quarter during which the foreign banking organization acquires shares of companies that engage, directly or indirectly, in business in the United States, or during which a foreign subsidiary of the FBO commences direct activities in the United States. The letter

should include a brief description of the nature and scope of each company's U.S. business(es), including the four-digit Standard Industrial Classification (SIC) code(s) of the U.S. activities of the company and of its direct parent, and a statement of total assets and total revenue of the direct parent. The foreign banking organization is not required to report information whose collection would cause the FBO to incur ''unreasonable effort or expense,'' or information that is otherwise ''unknown and not reasonably available.''

Current Actions: In December 1997, the Board proposed changes to Regulation K to require the information reported in the FR 4002 annually instead of quarterly (62 FR 68424). If the Board implements these proposed changes, the information collected on the FR 4002 will be reflected annually in the FR Y-7 and FR Y-7A, eliminating the need for this separate information collection. The FR 4002 will be discontinued if these proposed changes to Regulation K are adopted upon publication of the final rulemaking. The Federal Reserve received two public comment letters pertaining to the proposed revisions from a law firm and a trade association. Both organizations strongly supported the Federal Reserve's proposal.

Board of Governors of the Federal Reserve System, May 5, 1999.

Jennifer J. Johnson,

Secretary of the Board.

[FR Doc. 99–11810 Filed 5–10–99; 8:45AM]

Billing Code 6210–01–F

FEDERAL RESERVE SYSTEM

Formations of, Acquisitions by, and Mergers of Bank Holding Companies

The companies listed in this notice have applied to the Board for approval, pursuant to the Bank Holding Company Act of 1956 (12 U.S.C. 1841 *et seq.*) (BHC Act), Regulation Y (12 CFR Part 225), and all other applicable statutes and regulations to become a bank holding company and/or to acquire the assets or the ownership of, control of, or the power to vote shares of a bank or bank holding company and all of the banks and nonbanking companies owned by the bank holding company, including the companies listed below.

The applications listed below, as well as other related filings required by the Board, are available for immediate inspection at the Federal Reserve Bank indicated. The application also will be available for inspection at the offices of the Board of Governors. Interested persons may express their views in writing on the standards enumerated in the BHC Act (12 U.S.C. 1842(c)). If the proposal also involves the acquisition of a nonbanking company, the review also includes whether the acquisition of the nonbanking company complies with the standards in section 4 of the BHC Act. Unless otherwise noted, nonbanking activities will be conducted throughout the United States.

Unless otherwise noted, comments regarding each of these applications must be received at the Reserve Bank indicated or the offices of the Board of Governors not later than June 4, 1999.

A. Federal Reserve Bank of Atlanta (Lois Berthaume, Vice President) 104 Marietta Street, N.W., Atlanta, Georgia 30303-2713:

1. Banking Corporation of Florida, Naples, Florida; to become a bank holding company by acquiring 100 percent of the voting shares of First Florida Bank, Naples, Florida (in organization).

B. Federal Reserve Bank of Chicago (Philip Jackson, Applications Officer) 230 South LaSalle Street, Chicago, Illinois 60690-1413:

1. Strategic Capital Bancorp, Inc., Champaign, Illinois; to become a bank holding company by acquiring 100 percent of the voting shares of Strategic Capital Bank, Champaign, Illinois (in organization).

Board of Governors of the Federal Reserve System, May 6, 1999.

Robert deV. Frierson,

Associate Secretary of the Board.

[FR Doc. 99–11875 Filed 5–10–99; 8:45 am]

BILLING CODE 6210–01–F

FEDERAL RESERVE SYSTEM

Notice of Proposals to Engage in Permissible Nonbanking Activities or to Acquire Companies that are Engaged in Permissible Nonbanking Activities

The companies listed in this notice have given notice under section 4 of the Bank Holding Company Act (12 U.S.C. 1843) (BHC Act) and Regulation Y, (12 CFR Part 225) to engage *de novo*, or to acquire or control voting securities or assets of a company, including the companies listed below, that engages either directly or through a subsidiary or other company, in a nonbanking activity that is listed in § 225.28 of Regulation Y (12 CFR 225.28) or that the Board has determined by Order to be closely related to banking and permissible for bank holding companies. Unless otherwise noted, these activities will be conducted throughout the United States.

Each notice is available for inspection at the Federal Reserve Bank indicated. The notice also will be available for inspection at the offices of the Board of Governors. Interested persons may express their views in writing on the question whether the proposal complies with the standards of section 4 of the BHC Act.

Unless otherwise noted, comments regarding the applications must be received at the Reserve Bank indicated or the offices of the Board of Governors not later than May 26, 1999.

A. Federal Reserve Bank of San Francisco (Maria Villanueva, Manager of Analytical Support, Consumer Regulation Group) 101 Market Street, San Francisco, California 94105-1579:

1. Home Valley Bancorp, Grants Pass, Oregon; to engage *de novo* through its subsidiary, Valley Mortgage Funding Corporation, Grants Pass, Oregon, in mortgage lending activities, pursuant to § 225.28(b)(1) of Regulation Y.

Board of Governors of the Federal Reserve System, May 6, 1999.

Robert deV. Frierson,

Associate Secretary of the Board.

[FR Doc. 99–11876 Filed 5–10–99; 8:45 am]

BILLING CODE 6210–01–F

FEDERAL RESERVE SYSTEM

Sunshine Act Meeting

AGENCY HOLDING THE MEETING: Board of Governors of the Federal Reserve System.

TIME AND DATE: 12:00 noon, Monday, May 17, 1999.

PLACE: Marriner S. Eccles Federal Reserve Board Building, 20th and C Streets, N.W., Washington, D.C. 20551.

STATUS: Closed.

MATTERS TO BE CONSIDERED:

1. Personnel actions (appointments, promotions, assignments, reassignments, and salary actions) involving individual Federal Reserve System employees.
2. Any matters carried forward from a previously announced meeting.

CONTACT PERSON FOR MORE INFORMATION: Lynn S. Fox, Assistant to the Board; 202–452–3204.

SUPPLEMENTARY INFORMATION: You may call 202–452–3206 beginning at approximately 5 p.m. two business days before the meeting for a recorded announcement of bank and bank holding company applications scheduled for the meeting; or you may contact the Board's Web site at http://www.federalreserve.gov for an electronic announcement that not only lists applications, but also indicates

procedural and other information about the meeting.

Dated: May 7, 1999.

Robert deV. Frierson,

Associate Secretary of the Board.

[FR Doc. 99–12032 Filed 5–7–99; 3:39 pm]

BILLING CODE 6210–01–P

DEPARTMENT OF HEALTH AND HUMAN SERVICES

National Committee on Vital and Health Statistics: Meeting

Pursuant to the Federal Advisory Committee Act, the Department of Health and Human Services Announces the Following Advisory Committee Meeting.

Name: National Committee on Vital and Health Statistics (NCVHS), Workgroup on Computer-based Patient Records.

Time and Date: 9 a.m.–5:30 p.m., May 17, 1999; 9 a.m.–5 p.m., May 18, 1999.

Place: Agency for Health Care Policy and Research (AHCPR), AHCPR Conference Center, Conference Rooms C and D, 6010 Executive Boulevard, 4th Floor, Rockville, MD 20852.

Status: Open.

Purpose: At this meeting, the workgroup will hear a series of panel presentations on clinical vocabularies, terminologies, statistical classifications and code sets, clinical specific code sets, medical code sets, nursing code sets, and drug and device code sets.

Contact Person for More Information: Substantive program information as well as summaries of meetings and a roaster of committee members may be obtained from J. Michael Fitzmaurice, Ph.D., Agency for Health Care Policy and Research, 2101 East Jefferson Street, #602, Rockville, MD 20852, phone: 301–594–1483, x1052; or Marjorie S. Greenberg, Executive Secretary, NCVHS, NCHS, CDC, Room 1100, Presidential Building, 6525 Belcrest Road, Hyattsville, Maryland 20782, telephone (301) 436–7050. Information also is available on the NCVHS home page of the HHS website: http://aspe.os.dhhs.gov/ncvhs, where an agenda for the meeting will be posted when available.

Dated: May 4, 1999.

James Scanlon,

Director, Division of Data Policy, Office of the Assistant Secretary for Planning and Evaluation.

[FR Doc. 99–11755 Filed 5–10–99; 8:45 am]

BILLING CODE 4151–04–M

DEPARTMENT OF HEALTH AND HUMAN SERVICES

Agency for Toxic Substances and Disease Registry

Centers for Disease Control and Prevention

[ATSDR–146]

Availability of the Document, Draft Agenda for Public Health Activities for Fiscal Years 1999 and 2000 at U.S. Department of Energy Sites

AGENCIES: Agency for Toxic Substances and Disease Registry (ATSDR), Centers for Disease Control and Prevention (CDC).

ACTION: Notice.

SUMMARY: The Agency for Toxic Substances and Disease Registry jointly announces with the Centers for Disease Control and Prevention of the Department of Health and Human Services and the Office of Environment, Safety, and Health of the Department of Energy, the availability for public comment of the document, Draft Agenda for Public Health Activities for Fiscal Years 1999 and 2000 at U.S. Department of Energy Sites.

DATES: Comments must be received by June 30, 1999.

ADDRESSES: The document is available by contacting the Chief, Program Evaluation, Records, and Information Services Branch, Agency for Toxic Substances and Disease Registry, 1600 Clifton Road (E–56), Atlanta, GA 30333. Please submit written comments relating to the document to the same location. Generally, comments submitted will be available to the public upon request. Information submitted which is claimed as personal, medical, or otherwise confidential and proprietary must be clearly marked as such. Information so marked will not be disclosed except in accordance with 45 CFR Part 5.

FOR FURTHER INFORMATION CONTACT: Further information may be obtained from the location noted above, as well as on the INTERNET websites for ATSDR, CDC, or DOE. These are: http://www.atsdr.cdc.gov/; http://www.cdc.gov/; and http://tis.eh.doe.gov/epi/, respectively.

SUPPLEMENTARY INFORMATION: Congress included language in the Conference Report to the Fiscal Year 1999 Appropriations Bill for the Department of Energy which directed DOE and the Department of Health and Human Services (DHHS) to prepare a consolidated and coherent strategy that includes a public health agenda for each DOE site.

The Department of Health and Human Services conducts epidemiologic investigations involving residents of communities in the vicinity of DOE facilities, workers at DOE facilities, and other persons potentially exposed to radiation and other hazards relevant to nuclear weapons production and research. ATSDR has specific responsibilities for public health activities at DOE sites under sections 104, 105, 107, and 120 of the Comprehensive Environmental Response, Compensation, and Liability Act (CERCLA or ''Superfund''). These activities include: health consultations and public health assessments at DOE sites listed on, or proposed for, the Superfund National Priorities List and at sites that are the subject of petitions from the public; and other health-related activities such as epidemiologic studies, health surveillance, exposure and disease registries, health education, substance-specific applied research, emergency response, and preparation of toxicological profiles.

CDC and ATSDR have been working with DOE to develop a public health agenda that includes specific site plans for each DOE site, and that lays out a coordinated activity plan based on public health needs established by HHS and DOE. This draft agenda is being made available for public comment, so as to secure the benefit of public review and input before finalizing each site plan.

This document, Draft Agenda for Public Health Activities for Fiscal Years 1999 and 2000 at U.S. Department of Energy Sites, and its availability for public comment are being announced through this **Federal Register** notice.

Dated: March 5, 1999.

Georgi Jones,

Director, Office of Policy and External Affairs, Agency for Toxic Substances and Disease Registry.

[FR Doc. 99–11772 Filed 5–10–99; 8:45 am]

BILLING CODE 4163–70–P

DEPARTMENT OF HEALTH AND HUMAN SERVICES

Centers for Disease Control and Prevention

[Program Announcement 99121]

Environmental Community Based Organization Capacity Building Grant; Notice of Availability of Funds

A. Purpose

The Centers for Disease Control and Prevention (CDC) announces the availability of fiscal year (FY) 1999 funds for a grant program to assist community based organizations (CBO) to educate communities about energy-related health activities conducted near Department of Energy (DOE) sites. The purpose of this program is to conduct workshops, community meetings, collaborate with communities and develop material which may be used to educate communities about energy-related public health activities. This program addresses the ''Healthy People 2000'' priority area of Environmental Health.

B. Eligible Applicants

The solicitation is open to non-profit community-based organizations with a documented history of providing energy-related environmental health education/training to communities located near DOE nuclear weapons facilities sites.

Note: Pub. L. 104–65 states that an organization described in section 501(c)(4) of the Internal Revenue Code of 1986 that engages in lobbying activities is not eligible to receive Federal funds constituting an award, grant, cooperative agreement, contract, loan, or any other form.

C. Availability of Funds

Approximately $200,000 is available in FY 1999 to fund up to 4 awards. It is expected that the average award will be $50,000. It is expected that the awards will begin on or about September 1, 1999, and will be made for a 12-month budget period within a project period of up to 3 years. Funding estimates may change.

Continuation awards within an approved project period will be made on the basis of satisfactory progress as evidenced by required reports and the availability of funds.

D. Program Requirements

In conducting activities to achieve the purpose of this grant the recipient activities may include:

1. Prepare educational materials related to energy-related public health activities around DOE sites; and

2. Conduct community workshops and public meetings to provide information on the health effects of nuclear and chemical elements on the community.

3. Collaborate with the community to improve community understanding of energy-related health activities.

E. Application Content

Use the information in the Program Requirements, Other Requirements, and Evaluation Criteria sections to develop the application content. Your application will be evaluated on the criteria listed, so it is important to follow them in laying out your program plan. The narrative should be no more than 20 double-spaced pages, printed on one side, with one-inch margins, and unreduced font.

F. Submission and Deadline

Application:

Submit the original and two copies of PHS 5161–1 (OMB Number 0937–0189). Forms are in the application kit. On or before July 15, 1999, submit the application to the Grants Management Specialist identified in ''Where to Obtain Additional Information''.

Deadline: Applications shall be considered as meeting the deadline if they are either:

(a) Received on or before the deadline date; or

(b) Sent on or before the deadline date and received in time for orderly processing. (Applicants must request a legibly dated U.S. Postal Service postmark or obtain a legibly dated receipt from a commercial carrier or U.S. Postal Service. Private metered postmarks shall not be acceptable as proof of timely mailing.)

Late Applications: Applications which do not meet the criteria in (a) or (b) above are considered late applications, will not be considered, and will be returned to the applicant.

G. Evaluation Criteria

Each application will be evaluated individually against the following criteria by an independent review group appointed by CDC.

1. The extent to which the applicant documents a history of providing education and training on energy-related issues to communities near DOE sites. (25%)

2. The extent to which the proposal addresses a plan for collaborating with the community to enhance the communities' understanding of energy-related health issues. (50%)

3. The qualifications and commitment of the applicant; allocations of time and effort of staff devoted to the project; the qualifications of the primary and support staff; and the adequacy of existing and proposed facilities and resources for conducting project activities. (25%)

4. *Budget:* The proposed budget on the basis of its reasonableness, concise and clear justification, and consistency with the intended use of grant funds. (Not Scored)

H. Other Requirements

Technical Reporting Requirements

Provide CDC with original plus two copies of:

1. Progress reports annually, no more than 30 days after the end of the budget period;

2. Financial status report, no more than 90 days after the end of the budget period; and,

3. Final financial status and performance reports, no more than 90 days after the end of the project period.

Send all reports to the Grants Management Specialist identified in ''Where to Obtain Additional Information.''

The following additional requirements are applicable to this program. For a complete description of each, see Attachment I in the application kit.

AR–9 Paperwork Reduction Act Requirements
AR–10 Smoke-Free Workplace Requirements
AR–11 Healthy People 2000
AR–12 Lobbying Restrictions
AR–14 Accounting System Requirements
AR–15 Proof of Non-Profit Status

I. Authority and Catalog of Federal Domestic Assistance Number

This program is authorized under section 301(a) and 317 of the Public Health Service Act, [42 U.S.C. section 241(a) and 247(b)], as amended. The Catalog of Federal Domestic Assistance number is 93.283.

J. Where To Obtain Additional Information

You can download this proposal and application forms from the internet at: http://www.cdc.gov double click on ''funding''.

To receive additional written information and to request an application kit, call 1–888–GRANTS4 (1–888 472–6874). You will be asked to leave your name and address and will be instructed to identify the Announcement number of interest.

If you have questions after reviewing the contents of all the documents, business management technical

assistance may be obtained from: Victoria Sepe, Grants Management Specialist, Grants Management Branch, Procurement and Grants Office, Announcement 99121, Centers for Disease Control and Prevention (CDC), 2920 Brandywine Road, NE, Room 3000, Atlanta, GA 30341 telephone (770) 488–2721, Email address vxw1@cdc.gov.

For program technical assistance, contact: Mr. Art Robinson, Public Health Educator, Division of Environmental Hazards and Health Effects, National Center for Environmental Health, Centers for Disease Control and Prevention, 4770 Buford Highway, NE, Chamblee, Georgia 30341, Telephone: (770) 488–7040, E-mail address: ajr3@cdc.gov

Dated: May 5, 1999.

John L. Williams,

Director, Procurement and Grants Office Centers for Disease Control and Prevention (CDC).

[FR Doc. 99–11774 Filed 5–10–99; 8:45 am]

BILLING CODE 4163–18–P

DEPARTMENT OF HEALTH AND HUMAN SERVICES

Centers for Disease Control and Prevention

[Program Announcement 99132]

Notice of Availability of Funds; Varicella Surveillance and Epidemiologic Studies

A. Purpose

The Centers for Disease Control and Prevention (CDC) announces the availability of fiscal year (FY) 1999 funds for a cooperative agreement program to conduct surveillance and case investigations for varicella disease (chickenpox). This program will supplement existing local, State and national surveillance efforts and will facilitate research on impact of varicella vaccine on disease. Funds will be provided to conduct active surveillance and epidemiologic studies to monitor disease trends related to vaccine coverage. This program addresses the ''Healthy People 2000'' priority area 20, Immunization and Infectious Diseases.

The purpose of this program is:

1. To maintain a surveillance system to accurately monitor trends in varicella incidence by age group.
2. To monitor varicella vaccine coverage by age group.
3. To develop, implement, and evaluate strategies for the prevention and control of varicella.
4. To conduct other applied epidemiological research related to varicella disease and varicella vaccine.

B. Eligible Applicants

Assistance will be provided only to official State and local public health agencies or their bona fide agents including the District of Columbia, the Commonwealth of Puerto Rico, the Virgin Islands, the Commonwealth of the Northern Mariana Islands, American Samoa, Guam, federally-recognized Indian tribal governments the Federated States of Micronesia, the Republic of the Marshall Islands, and the Republic of Palau.

C. Availability of Funds

1. Approximately $665,000 is available in FY 1999 to fund two to three awards. The average award will be about $200,000, ranging from $150,000 to $250,000. It is expected that awards will begin on or about September 30, 1999, and will be made for a 12-month budget period within a project period of up to 5 years. Funding estimates may vary and are subject to change. Continuation awards within the project period will be made on the basis of satisfactory progress as evidenced by required reports and the availability of funds. Funds awarded under this cooperative agreement cannot be used to supplant existing state expenditures in this area.

D. Program Requirements

In conducting the activities to achieve the purpose of this program, the recipient will be responsible for the activities listed under (1.) Recipient Activities and CDC will be responsible for the activities listed under (2.) CDC Activities.

1. Recipient Activities

a. Establish, maintain, and evaluate a surveillance system with the capacity to monitor varicella disease trends by age group in a well-defined population. To ensure statistical validity, these surveillance areas must have populations of at least 300,000 to provide a sufficient number of varicella cases each year as varicella incidence declines with increasing use of the vaccine in children.

b. Perform case investigations and collect, analyze, and disseminate information using this information.

c. Collect and verify with health care providers the immunization status of all reported cases of breakthrough disease, including age of vaccination and other vaccines administered simultaneously or within 30 days.

d. Collect and report information on vaccine coverage by age group (age groups <1 year, 1 year, 2 years, 3 years, 4 years, 5 years, 6 years, 7 years, 8–9 years, 10–12 years, 13–14 years, 15–19 years and >20 years).

e. Develop, implement and evaluate varicella prevention and control strategies including outbreak control.

f. Conduct applied epidemiological research. Examples of such projects include but are not limited to the following: evaluation of risk factors for vaccine failure; evaluation of completeness of reporting by age group; risk factors for severe varicella disease and hospitalization; studies of vaccine effectiveness; reliability of physician diagnosis of breakthrough disease and reliability of parental history of varicella among children less than 10 years.

g. Provide laboratory specimens such as disease-causing isolates to appropriate organizations (which may include CDC) for laboratory evaluation needed for varicella surveillance or as part of epidemiological studies, e.g. virus strain identification, confirmation of breakthrough disease, and molecular epidemiological studies.

h. Manage, analyze and interpret data and present and publish important public health findings.

i. Participate in planning meetings to coordinate varicella surveillance project activities.

j. Function as part of a network of varicella surveillance sites.

3. CDC Activities

a. Provide consultation, scientific and technical assistance in general operation of the project and in the design and conduct of applied research projects.

b. Provide assistance to recipients regarding development and implementation of all surveillance activities, data collection methods including a standard case investigation form, and analysis of data.

c. Assist in the development and implementation of a standard data management process, including development of computer programs for data entry and interim analyses.

d. Assist in monitoring and evaluating scientific and operational accomplishments of the varicella surveillance project and progress in achieving the purpose and overall goals of this program.

e. Participate in analysis and interpretation of data and in presentation and publication of findings.

E. Application Content

Use the information in the Program Requirements, Other Requirements, and Evaluation Criteria sections to develop the application content. The program narrative should include the following sections: background, objectives,

methods, plan of operation, and plan of evaluation. The narrative should describe:

1. The demographic characteristics of the general population upon which the surveillance system will focus.

2. The epidemiology of varicella in the surveillance population during the period 1995–1999 and varicella vaccine coverage among specified age groups during the period 1995–1999. The availability of historical data for baseline disease trends by age group prior to, and following, implementation of a vaccination program is required. These data should be comparable to that proposed for collection through this project in order to monitor trends.

3. The sources of reporting within the reporting area under study. Appropriate reporting and sources for surveillance should be identified and described in detail. If sampling is proposed, it must be described in detail including how it will be performed and how validity will be assured.

4. The operation of the surveillance system. This should include details of reporting, type and format of data to be obtained, mechanism for monitoring the system, and personnel requirements for obtaining, managing and analyzing data. The proposed surveillance system should provide the basis for epidemiological studies of the impact of varicella vaccine, identify cases occurring in vaccinated individuals, document the severity of disease and facilitate public health action.

5. A brief proposal for implementing and evaluating a disease prevention and/or control strategy.

6. A brief proposal for an applied epidemiological research study (addressing issues other than disease prevention and control strategies).

7. Background information and other data to demonstrate that the applicant has the appropriate organizational structure, administrative support, and ability to access appropriate target populations or study subjects.

8. The qualifications, including training and experience, of project personnel, and projected level of effort by each toward accomplishment of the proposed activities.

Budget Instructions

For each line item (as identified on the Form 424a of the application), show both Federal and non-Federal (e.g., State funding) shares of total cost for the varicella surveillance project. For each staff member listed under the Personnel line item, indicate their specific responsibilities relative to each of the proposed projects. Include provisions for travel of the principal investigator and one varicella surveillance project participant to two meetings at CDC in Atlanta during the first year of the program.

A budget justification is required for all budget items, consistent with the purpose and objectives of the project. Letters of support should be included if applicants anticipate the participation of other organizations in conducting proposed activities.

The application narrative (excluding budget, appendices, and required forms) must not exceed 30 single-spaced pages, printed on one side, with one-inch margins, and unreduced font. Only the following information should be presented in appendices: Letters of support, documentation of bona fide agent status, curricula vitaes, and budget. All other materials or information that should be included in the narrative will not be accepted if placed in the appendices.

F. Submission and Deadline

Letter of Intent

In order to enable CDC to determine the level of interest in the program announcement, a non-binding letter-of-intent to apply is requested from potential applicants. The letter-of-intent should include: (1) Name and address of institution, and (2) name, address, and telephone number of contact person. The letter-of-intent should be submitted to the Grants Management Specialist identified in Section J ''Where to Obtain Additional Information on or before June 11, 1999.''

Application

Submit the original and two copies of PHS 5161–1 (OMB Number 0937–0189). Forms are provided in the application kit. On or before July 12, 1999, submit the application to: Mattie Jackson, Grants Management Specialist, Grants Management Branch, Procurement and Grants Office, Announcement 99132, Centers for Disease Control and Prevention (CDC), 2920 Brandywine Road, Room 3000,Atlanta, GA 30341–4146,

Deadline: Applications shall be considered as meeting the deadline if they are either:

(a) Received on or before the deadline; or

(b) Sent on or before the deadline date and received in time for submission to the review panel. (Applicants must request a legibly dated U.S. Postal Service postmark or obtain a legibly dated receipt from a commercial carrier of U.S. Postal Service. Private metered postmarks shall not be acceptable as proof of timely mailing).

Late Applications: Applications which do not meet the criteria (a) or (b) above a considered late applications, will not be considered, and will be returned to the applicant.

G. Evaluation Criteria

Each application will be evaluated individually by an independent review group appointed by CDC according to the following criteria:

(1) Understanding the objectives of the varicella surveillance project (5 points).

(a) Demonstration of a clear understanding of the background and objectives of this cooperative agreement program and the feasibility of accomplishing the outcomes described.

(2) Description of the population base and the vaccine providers in the varicella surveillance project site (5 points)

(a) Clear definition of the geographic area and population base in which the varicella surveillance site will operate. Detailed description of the demographics of the proposed population base including the extent to which the population base is diverse in terms of demographics and special populations.

(b) Description of vaccination providers in both the private and public sectors within the varicella surveillance site.

(3) Adequacy of baseline data for varicella surveillance; availability of trend data for varicella surveillance from 1995–1999 and comparability of these data to the proposed surveillance system (20 points).

(4) Description of existing capacity to perform surveillance for varicella, to assess vaccine impact, and to perform other applied epidemiological research (40 points).

(a) Adequacy of plan for performing and maintaining varicella surveillance that will cover all age groups. Description of methods for monitoring varicella disease in all age groups including the adequacy of an appropriate plan, and the extent to which the proposed sources of case reports will ensure an adequate sample size and representativeness of populations and all age groups at risk for varicella to ensure that the epidemiological analysis of the impact of varicella vaccine will be appropriate and statistically valid. If sampling is proposed, provide a detailed description of how sampling will be performed and how validity will be assured.

(b) Adequacy of plan for monitoring vaccine coverage. Description of plan for obtaining information on vaccine

coverage by age group on an ongoing basis.

(c) Adequacy of plans for data management. Description of plans for data management and analysis.

(d) Quality of proposals submitted for:

(i) Implementing and evaluating a disease prevention and/or control strategy.

(ii) An applied epidemiological research study (addressing an issue other then disease prevention and control strategies).

(5) Operational plan (15 points).

(a) The plan should identify the proposed organizational and operating structure/procedures including the roles and responsibilities of all participating agencies, organizations, institutions, and individuals. Description of applicant's partnerships with necessary and appropriate organizations for establishing and operating the proposed varicella surveillance including appropriate public health action in response to outbreaks.

(b) Ability to function as part of a surveillance network. The extent to which the applicant describes plans for collaboration with other varicella surveillance sites in the establishment and operation of the varicella surveillance and individual varicella surveillance projects, including project design/development (e.g., protocols) and synthesis and dissemination of findings.

(c) Quality of the proposed projects (as requested in the Application Content section above) regarding consistency with public health needs, intent of this program, feasibility, methodology/approach, and collaboration/participation of partner organizations. The degree to which the applicant has met the CDC Policy requirements regarding the inclusion of women, ethnic, and racial groups in the proposed research. This includes: (1) the proposed plan for the inclusion of both sexes and racial and ethnic minority populations for appropriate representation; (2) the proposed justification when representation is limited or absent; (3) a statement as to whether the design of the study is adequate to measure differences when warranted; and (4) a statement as to whether the plans for recruitment and outreach for study participants include the process of establishing partnerships with community(ies) and recognition of mutual benefits.

(d) Demonstration of support from non-applicant participating agencies, institutions, organizations, etc. indicated in applicant's operational plan. Applicant should provide (in an appendix) letters of support which clearly indicate collaborators willingness to be participants in the varicella surveillance activities. Do not include letters of support from CDC personnel.

(6) Personnel qualifications and management plan (10 points).

(a) Identification of applicant's key professional personnel to be assigned to the varicella surveillance site and varicella surveillance projects (provide curriculum vitae for each in an appendix). Clear identification of their respective roles in the management and operation of the varicella surveillance site. Descriptions of their experience in conducting work similar to that proposed in this announcement.

(b) Description of all support staff and services to be assigned to the varicella surveillance project.

(7) Evaluation (5 points).

(a) Quality of plan for monitoring and evaluating the completeness of surveillance, the quality of vaccine coverage data, and the scientific and operational accomplishments of the varicella surveillance site and of individual varicella surveillance projects.

(b) Quality of plan for monitoring and evaluating progress in achieving the purpose and overall goals of this cooperative agreement program.

(8) Budget (not scored).

Extent to which the line item budget is detailed, clearly justified, and consistent with the purpose and objectives of this program.

If requesting funds for any contracts, provide the following information for each proposed contract: (1) Name of proposed contractor, (2) breakdown and justification for estimated costs, (3) description and scope of activities to be performed by contractor, (4) period of performance, and (5) method of contractor selection (e.g., sole-source or competitive solicitation).

(9) Human Subjects (not scored).

Does the application adequately address the requirements of Title 45 CFR Part 46 for the protection of human subjects?

H. Other Requirements

Technical Reporting Requirements

Provide CDC with the original plus two copies of:

1. Semiannual progress reports
2. Financial status report, no more than 90 days after the end of the budget period.
3. Final financial report and performance report, no more than 90 days after the end of the project period

Send all reports to the Grants Management Specialist identified in Section J ''Where to Obtain Additional Information'' section of this announcement.

The following additional requirements are applicable to this program. For a complete description of each, see Attachment I in the application kit.

AR98–1 Human Subjects Requirements
AR98–2 Requirements for Inclusion of Women and Racial and Ethnic Minorities in Research
AR98–7 Executive Order 12372 Review
AR98–9 Paperwork Reduction Act Requirements
AR98–10 Smoke-Free Workplace Requirements
AR98–11 Healthy People 2000
AR98–12 Lobbying Restrictions

I. Authority and Catalog of Federal Domestic Assistance Number

This program is authorized under Sections 301(a) and 317(k)(1), (2) of the Public Health Service Act [42 U.S.C. sections 241(a) and 247b(k)(1), (2)], as amended. The Catalog of Federal Domestic Assistance number is 93.185.

J. Where To Obtain Additional Information

Copies of this announcement and application forms can be downloaded by using the CDC homepage address on the Internet: http://www.cdc.gov (click on funding).

To receive additional written information and to request an application kit, call 1–888-GRANTS4 (1–888–472–6874). You will be asked to leave your name and address and will be instructed to identify the Announcement number of interest.

To obtain additional information contact: Mattie Jackson, Grants Management Specialist, Grants Management Branch, Procurement and Grants Office Announcement 99132, Centers for Disease Control and Prevention (CDC), 2920 Brandywine Road, Room 3000 Atlanta, GA 30341–4146, Telephone (770) 488–2718 E-mail: mij3@cdc.gov.

For programmatic technical assistance, contact: Jane Seward, MBBS, MPH, Medical Epidemiologist, Varicella Activity, VPDB, National Immunization Program, Centers for Disease Control and Prevention (CDC), MS E–61, Atlanta, GA 30333, Telephone (404) 639–8230, E-mail: jfs2@cdc.gov.

Dated: May 5, 1999.

John L. Williams,

Director, Procurement and Grants Office, Centers for Disease Control and Prevention (CDC).

[FR Doc. 99–11773 Filed 5–10–99; 8:45 am]

BILLING CODE 4163–18–P

DEPARTMENT OF HEALTH AND HUMAN SERVICES

Food and Drug Administration

[Docket No. 98E–0319]

Determination of Regulatory Review Period for Purposes of Patent Extension; GenESA®

AGENCY: Food and Drug Administration, HHS.

ACTION: Notice.

SUMMARY: The Food and Drug Administration (FDA) has determined the regulatory review period for GenESA® and is publishing this notice of that determination as required by law. FDA has made the determination because of the submission of an application to the Commissioner of Patents and Trademarks, Department of Commerce, for the extension of a patent which claims that human drug product.

ADDRESSES: Written comments and petitions should be directed to the Dockets Management Branch (HFA–305), Food and Drug Administration, 5630 Fishers Lane, rm. 1061, Rockville, MD 20852.

FOR FURTHER INFORMATION CONTACT: Brian J. Malkin, Office of Health Affairs (HFY–20), Food and Drug Administration, 5600 Fishers Lane, Rockville, MD 20857, 301–827–6620.

SUPPLEMENTARY INFORMATION: The Drug Price Competition and Patent Term Restoration Act of 1984 (Pub. L. 98–417) and the Generic Animal Drug and Patent Term Restoration Act (Pub. L. 100–670) generally provide that a patent may be extended for a period of up to 5 years so long as the patented item (human drug product, animal drug product, medical device, food additive, or color additive) was subject to regulatory review by FDA before the item was marketed. Under these acts, a product's regulatory review period forms the basis for determining the amount of extension an applicant may receive.

A regulatory review period consists of two periods of time: A testing phase and an approval phase. For human drug products, the testing phase begins when the exemption to permit the clinical investigations of the drug becomes effective and runs until the approval phase begins. The approval phase starts with the initial submission of an application to market the human drug product and continues until FDA grants permission to market the drug product. Although only a portion of a regulatory review period may count toward the actual amount of extension that the Commissioner of Patents and Trademarks may award (for example, half the testing phase must be subtracted as well as any time that may have occurred before the patent was issued), FDA's determination of the length of a regulatory review period for a human drug product will include all of the testing phase and approval phase as specified in 35 U.S.C. 156(g)(1)(B).

FDA recently approved for marketing the human drug product GenESA® (arbutamine hydrochloride). GenESA® is indicated for diagnosing the presence or absence of coronary artery disease in patients who cannot exercise adequately when used in conjunction with radionuclide myocardial perfusion imaging or echocardiography. Subsequent to this approval, the Patent and Trademark Office received a patent term restoration application for GenESA® (U.S. Patent No. 5,234,404) from Gensia Sicor, Inc., and the Patent and Trademark Office requested FDA's assistance in determining this patent's eligibility for patent term restoration. In a letter dated December 17, 1998, FDA advised the Patent and Trademark Office that this human drug product had undergone a regulatory review period and that the approval of GenESA® represented the first permitted commercial marketing or use of the product. Shortly thereafter, the Patent and Trademark Office requested that FDA determine the product's regulatory review period.

FDA has determined that the applicable regulatory review period for GenESA® is 2,641 days. Of this time, 1,295 days occurred during the testing phase of the regulatory review period, while 1,346 days occurred during the approval phase. These periods of time were derived from the following dates:

1. *The date an exemption under section 505 of the Federal Food, Drug, and Cosmetic Act (the act) (21 U.S.C. 355) became effective*: June 22, 1990. The applicant claims June 23, 1990, as the date the investigational new drug application (IND) became effective. However, FDA records indicate that the IND effective date was June 22, 1990, which was 30 days after FDA receipt of the IND.

2. *The date the application was initially submitted with respect to the human drug product under section 505 of the act*: January 6, 1994. The applicant claims December 21, 1993, as the date the new drug application (NDA) for GenESA® (NDA 20–420) was initially submitted. However, FDA records indicate that NDA 20–420 was submitted on January 6, 1994.

3. *The date the application was approved*: September 12, 1997. FDA has verified the applicant's claim that NDA 20–420 was approved on September 12, 1997.

This determination of the regulatory review period establishes the maximum potential length of a patent extension. However, the U.S. Patent and Trademark Office applies several statutory limitations in its calculations of the actual period for patent extension. In its application for patent extension, this applicant seeks 399 days of patent term extension.

Anyone with knowledge that any of the dates as published is incorrect may, on or before July 12, 1999, submit to the Dockets Management Branch (address above) written comments and ask for a redetermination. Furthermore, any interested person may petition FDA, on or before November 8, 1999, for a determination regarding whether the applicant for extension acted with due diligence during the regulatory review period. To meet its burden, the petition must contain sufficient facts to merit an FDA investigation. (See H. Rept. 857, part 1, 98th Cong., 2d sess., pp. 41–42, 1984.) Petitions should be in the format specified in 21 CFR 10.30.

Comments and petitions should be submitted to the Dockets Management Branch (address above) in three copies (except that individuals may submit single copies) and identified with the docket number found in brackets in the heading of this document. Comments and petitions may be seen in the Dockets Management Branch between 9 a.m. and 4 p.m., Monday through Friday.

Dated: April 29, 1999.

Thomas J. McGinnis,

Deputy Associate Commissioner for Health Affairs.

[FR Doc. 99–11822 Filed 5–10–99; 8:45 am]

BILLING CODE 4160–01–F

DEPARTMENT OF HEALTH AND HUMAN SERVICES

Food and Drug Administration

[Docket No. 98E–0842]

Determination of Regulatory Review Period for Purposes of Patent Extension; Aggrastat®

AGENCY: Food and Drug Administration, HHS.

ACTION: Notice.

SUMMARY: The Food and Drug Administration (FDA) has determined the regulatory review period for Aggrastat® and is publishing this notice of that determination as required by law. FDA has made the determination because of the submission of an

application to the Commissioner of Patents and Trademarks, Department of Commerce, for the extension of a patent which claims that human drug product.

ADDRESSES: Written comments and petitions should be directed to the Dockets Management Branch (HFA–305), Food and Drug Administration, 5630 Fishers Lane, rm. 1061, Rockville, MD 20852.

FOR FURTHER INFORMATION CONTACT: Brian J. Malkin, Office of Health Affairs (HFY–20), Food and Drug Administration, 5600 Fishers Lane, Rockville, MD 20857, 301–827–6620.

SUPPLEMENTARY INFORMATION: The Drug Price Competition and Patent Term Restoration Act of 1984 (Pub. L. 98–417) and the Generic Animal Drug and Patent Term Restoration Act (Pub. L. 100–670) generally provide that a patent may be extended for a period of up to 5 years so long as the patented item (human drug product, animal drug product, medical device, food additive, or color additive) was subject to regulatory review by FDA before the item was marketed. Under these acts, a product's regulatory review period forms the basis for determining the amount of extension an applicant may receive.

A regulatory review period consists of two periods of time: A testing phase and an approval phase. For human drug products, the testing phase begins when the exemption to permit the clinical investigations of the drug becomes effective and runs until the approval phase begins. The approval phase starts with the initial submission of an application to market the human drug product and continues until FDA grants permission to market the drug product. Although only a portion of a regulatory review period may count toward the actual amount of extension that the Commissioner of Patents and Trademarks may award (for example, half the testing phase must be subtracted as well as any time that may have occurred before the patent was issued), FDA's determination of the length of a regulatory review period for a human drug product will include all of the testing phase and approval phase as specified in 35 U.S.C. 156(g)(1)(B).

FDA recently approved for marketing the human drug product Aggrastat® (tirofiban hydrochloride). Aggrastat® , in combination with heparin, is indicated for the treatment of acute coronary syndrome. Subsequent to this approval, the Patent and Trademark Office received a patent term restoration application for Aggrastat® (U.S. Patent No. 5,292,756) from Merck & Co., and the Patent and Trademark Office requested FDA's assistance in determining this patent's eligibility for patent term restoration. In a letter dated December 11, 1998, FDA advised the Patent and Trademark Office that this human drug product had undergone a regulatory review period and that the approval of Aggrastat® represented the first permitted commercial marketing or use of the product. Shortly thereafter, the Patent and Trademark Office requested that FDA determine the product's regulatory review period.

FDA has determined that the applicable regulatory review period for Aggrastat® is 2,247 days. Of this time, 2,051 days occurred during the testing phase of the regulatory review period, while 196 days occurred during the approval phase. These periods of time were derived from the following dates:

1. *The date an exemption under section 505 of the Federal Food, Drug, and Cosmetic Act (the act) (21 U.S.C. 355) became effective*: March 21, 1992. The applicant claims March 20, 1992, as the date the investigational new drug application (IND) became effective. However, FDA records indicate that the IND effective date was March 21, 1992, which was 30 days after FDA receipt of the IND.

2. *The date the application was initially submitted with respect to the human drug product under section 505 of the act*: October 31, 1997. FDA has verified the applicant's claim that the new drug application (NDA) for Aggrastat® (NDA 20–912) was initially submitted on October 31, 1997.

3. *The date the application was approved*: May 14, 1998. FDA has verified the applicant's claim that NDA 20–912 was approved on May 14, 1998.

This determination of the regulatory review period establishes the maximum potential length of a patent extension. However, the U.S. Patent and Trademark Office applies several statutory limitations in its calculations of the actual period for patent extension. In its application for patent extension, this applicant seeks 433 days of patent term extension.

Anyone with knowledge that any of the dates as published is incorrect may, on or before July 12, 1999, submit to the Dockets Management Branch (address above) written comments and ask for a redetermination. Furthermore, any interested person may petition FDA, on or before November 11, 1999 for a determination regarding whether the applicant for extension acted with due diligence during the regulatory review period. To meet its burden, the petition must contain sufficient facts to merit an FDA investigation. (See H. Rept. 857, part 1, 98th Cong., 2d sess., pp. 41–42, 1984.) Petitions should be in the format specified in 21 CFR 10.30.

Comments and petitions should be submitted to the Dockets Management Branch (address above) in three copies (except that individuals may submit single copies) and identified with the docket number found in brackets in the heading of this document. Comments and petitions may be seen in the Dockets Management Branch between 9 a.m. and 4 p.m., Monday through Friday.

Dated: April 29, 1999.

Thomas J. McGinnis,

Deputy Associate Commissioner for Health Affairs.

[FR Doc. 99–11821 Filed 5–10–99; 8:45 am]

BILLING CODE 4160–01–F

DEPARTMENT OF HEALTH AND HUMAN SERVICES

Health Care Financing Administration

[HCFA–9000–N]

RIN 0938–AJ37

Medicare and Medicaid Programs; Quarterly Listing of Program Issuances—Third Quarter, 1998

AGENCY: Health Care Financing Administration (HCFA), HHS.

ACTION: Notice.

SUMMARY: This notice lists HCFA manual instructions, substantive and interpretive regulations, and other **Federal Register** notices that were published during July, August, and September of 1998, relating to the Medicare and Medicaid programs. This notice also identifies certain devices with investigational device exemption numbers approved by the Food and Drug Administration that potentially may be covered under Medicare.

Section 1871(c) of the Social Security Act requires that we publish a list of Medicare issuances in the **Federal Register** at least every 3 months. Although we are not mandated to do so by statute, for the sake of completeness of the listing, we are also including all Medicaid issuances and Medicare and Medicaid substantive and interpretive regulations (proposed and final) published during this timeframe.

FOR FURTHER INFORMATION CONTACT: It is possible that an interested party may have a specific information need and not be able to determine from the listed information whether the issuance or regulation would fulfill that need. Consequently, we are providing information contact persons to answer general questions concerning these

items. Copies are not available through the contact persons.

Questions concerning Medicare items in Addendum III may be addressed to Bridget Wilhite, Office of Communications and Operations Support, Division of Regulations and Issuances, Health Care Financing Administration, (410) 786–5248.

Questions concerning Medicaid items in Addendum III may be addressed to Betty Stanton, Center for Medicaid State Operations, Policy Coordination and Planning Group, Health Care Financing Administration, S2–26–13, 7500 Security Boulevard, Baltimore, MD 21244–1850, (410) 786–3247.

Questions concerning Food and Drug Administration-approved investigational device exemptions may be addressed to Sharon Hippler, Office of Clinical Standards and Quality, Coverage and Analysis Group, Health Care Financing Administration, C4–11–04, 7500 Security Boulevard, Baltimore, MD 21244–1850, (410) 786–4633.

Questions concerning all other information may be addressed to Kristy Nishimoto, Office of Communications and Operations Support, Division of Regulations and Issuances, Health Care Financing Administration, C5–16–03, 7500 Security Boulevard, Baltimore, MD 21244–1850, (410) 786–8517.

SUPPLEMENTARY INFORMATION:

I. Program Issuances

The Health Care Financing Administration (HCFA) is responsible for administering the Medicare and Medicaid programs. These programs pay for health care and related services for 39 million Medicare beneficiaries and 35 million Medicaid recipients. Administration of these programs involves (1) Furnishing information to Medicare beneficiaries and Medicaid recipients, health care providers, and the public and (2) effective communications with regional offices, State governments, State Medicaid Agencies, State Survey Agencies, various providers of health care, fiscal intermediaries and carriers that process claims and pay bills, and others. To implement the various statutes on which the programs are based, we issue regulations under the authority granted to the Secretary of the Department of Health and Human Services under sections 1102, 1871, 1902, and related provisions of the Social Security Act (the Act). We also issue various manuals, memoranda, and statements necessary to administer the programs efficiently.

Section 1871(c)(1) of the Act requires that we publish a list of all Medicare manual instructions, interpretive rules, and guidelines of general applicability not issued as regulations at least every 3 months in the **Federal Register**. We published our first notice June 9, 1988 (53 FR 21730). Although we are not mandated to do so by statute, for the sake of completeness of the listing of operational and policy statements, we are continuing our practice of including Medicare substantive and interpretive regulations (proposed and final) published during the 3-month time frame.

II. How To Use the Addenda

This notice is organized so that a reader may review the subjects of all manual issuances, memoranda, substantive and interpretive regulations, or Food and Drug Administration-approved investigational device exemptions published during the timeframe to determine whether any are of particular interest. We expect it to be used in concert with previously published notices. Those unfamiliar with a description of our Medicare manuals may wish to review Table I of our first three notices (53 FR 21730, 53 FR 36891, and 53 FR 50577) published in 1988, and the notice published March 31, 1993 (58 FR 16837). Those desiring information on the Medicare Coverage Issues Manual may wish to review the August 21, 1989 publication (54 FR 34555).

To aid the reader, we have organized and divided this current listing into five addenda:

- Addendum I lists the publication dates of the most recent quarterly listings of program issuances.
- Addendum II identifies previous **Federal Register** documents that contain a description of all previously published HCFA Medicare and Medicaid manuals and memoranda.
- Addendum III lists a unique HCFA transmittal number for each instruction in our manuals or Program Memoranda and its subject matter. A transmittal may consist of a single instruction or many. Often, it is necessary to use information in a transmittal in conjunction with information currently in the manuals.
- Addendum IV lists all substantive and interpretive Medicare and Medicaid regulations and general notices published in the **Federal Register** during the quarter covered by this notice. For each item we list the—
  + Date published;
  + **Federal Register** citation;
  + Parts of the Code of Federal Regulations (CFR) that have changed (if applicable);
  + Agency file code number;
  + Title of the regulation;
  + Ending date of the comment period (if applicable); and
  + Effective date (if applicable).
- Addendum V includes listings of the Food and Drug Administration-approved investigational device exemption numbers that have been approved or revised during the quarter covered by this notice. On September 19, 1995, we published a final rule (60 FR 48417) establishing in regulations at 42 CFR 405.201 *et seq.* that certain devices with an investigational device exemption approved by the Food and Drug Administration and certain services related to those devices may be covered under Medicare. It is our practice to announce all investigational device exemption categorizations, using the investigational device exemption numbers the Food and Drug Administration assigns. The listings are organized according to the categories to which the device numbers are assigned (that is, Category A or Category B, and identified by the investigational device exemption number).

III. How To Obtain Listed Material

A. Manuals

Those wishing to subscribe to program manuals should contact either the Government Printing Office (GPO) or the National Technical Information Service (NTIS) at the following addresses:

Superintendent of Documents, Government Printing Office, ATTN: New Orders, PO Box 371954, Pittsburgh, PA 15250–7954, Telephone (202) 512–1800, Fax number (202) 512–2250 (for credit card orders); or

National Technical Information Service, Department of Commerce, 5825 Port Royal Road, Springfield, VA 22161, Telephone (703) 487–4630.

In addition, individual manual transmittals and Program Memoranda listed in this notice can be purchased from NTIS. Interested parties should identify the transmittal(s) they want. GPO or NTIS can give complete details on how to obtain the publications they sell. Additionally, all manuals are available at the following Internet address: http://www.hcfa.gov/pubforms/progman.htm.

B. Regulations and Notices

Regulations and notices are published in the daily **Federal Register**. Interested individuals may purchase individual copies or subscribe to the **Federal Register** by contacting the GPO at the address given above. When ordering individual copies, it is necessary to cite

either the date of publication or the volume number and page number.

The **Federal Register** is also available on 24x microfiche and as an online database through GPO Access. The online database is updated by 6 a.m. each day the **Federal Register** is published. The database includes both text and graphics from Volume 59, Number 1 (January 2, 1994) forward. Free public access is available on a Wide Area Information Server (WAIS) through the Internet and via asynchronous dial-in. Internet users can access the database by using the World Wide Web; the Superintendent of Documents home page address is http://www.access.gpo.gov/su—docs/, by using local WAIS client software, or by telnet to swais.access.gpo.gov, then log in as guest (no password required). Dial-in users should use communications software and modem to call (202) 512–1661; type swais, then log in as guest (no password required).

C. Rulings

We publish rulings on an infrequent basis. Interested individuals can obtain copies from the nearest HCFA Regional Office or review them at the nearest regional depository library. We have, on occasion, published rulings in the **Federal Register**. Rulings, beginning with those released in 1995, are available online, through the HCFA Home Page. The Internet address is http://www.hcfa.gov/regs/rulings.htm.

D. HCFA's Compact Disk-Read Only Memory (CD–ROM)

Our laws, regulations, and manuals are also available on CD–ROM and may be purchased from GPO or NTIS on a subscription or single copy basis. The Superintendent of Documents list ID is HCLRM, and the stock number is 717–139–00000–3. The following material is on the CD–ROM disk:

- Titles XI, XVIII, and XIX of the Act.
- HCFA-related regulations.
- HCFA manuals and monthly revisions.
- HCFA program memoranda.

The titles of the Compilation of the Social Security Laws are current as of January 1, 1995. (Updated titles of the Social Security Laws are available on the Internet at http://www.ssa.gov/OP__Home/ssact/comp-toc.htm.) The remaining portions of CD–ROM are updated on a monthly basis.

Because of complaints about the unreadability of the Appendices (Interpretive Guidelines) in the State Operations Manual (SOM), as of March 1995, we deleted these appendices from CD–ROM. We intend to re-visit this issue in the near future and, with the aid of newer technology, we may again be able to include the appendices on CD–ROM.

Any cost report forms incorporated in the manuals are included on the CD–ROM disk as LOTUS files. LOTUS software is needed to view the reports once the files have been copied to a personal computer disk.

IV. How To Review Listed Material

Transmittals or Program Memoranda can be reviewed at a local Federal Depository Library (FDL). Under the FDL program, government publications are sent to approximately 1,400 designated libraries throughout the United States. Some FDLs may have arrangements to transfer material to a local library not designated as an FDL. Contact any library to locate the nearest FDL.

In addition, individuals may contact regional depository libraries that receive and retain at least one copy of most Federal government publications, either in printed or microfilm form, for use by the general public. These libraries provide reference services and interlibrary loans; however, they are not sales outlets. Individuals may obtain information about the location of the nearest regional depository library from any library. Superintendent of Documents numbers for each HCFA publication are shown in Addendum III, along with the HCFA publication and transmittal numbers.

To help FDLs locate the materials, use the Superintendent of Documents number, plus the HCFA transmittal number. For example, to find the Intermediary Manual, (HCFA Pub. 113–3) transmittal entitled ''Electronic Data Interchange Security, Privacy, Audit and Legal Issues,'' use the Superintendent of Documents No. HE 22.8/6 and the HCFA transmittal number 1748.

(Catalog of Federal Domestic Assistance Program No. 93.773, Medicare—Hospital Insurance, Program No. 93.774, Medicare—Supplementary Medical Insurance Program, and Program No. 93.714, Medical Assistance Program)

Dated: April 23, 1999.

Elizabeth Cusick,

Acting Director, Office of Communications and Operations Support.

Addendum I

This addendum lists the publication dates of the most recent quarterly listings of program issuances.

November 21, 1997 (62 FR 62325)
June 4, 1998 (63 FR 30499)
August 11, 1998 (63 FR 42857)
September 16, 1998 (63 FR 49598)
December 9, 1998 (63 FR 67899)

Addendum II—Description of Manuals, Memoranda, and HCFA Rulings

An extensive descriptive listing of Medicare manuals and memoranda was published on June 9, 1988, at 53 FR 21730 and supplemented on September 22, 1988, at 53 FR 36891 and December 16, 1988, at 53 FR 50577. Also, a complete description of the Medicare Coverage Issues Manual was published on August 21, 1989, at 54 FR 34555. A brief description of the various Medicaid manuals and memoranda that we maintain was published on October 16, 1992, at 57 FR 47468.

Addendum III.—Medicare and Medicaid Manual Instructions

[July 1998 Through September 1998]

Trans. No.	Manual/Subject/Publication No.
	Intermediary Manual Part 3—Claims Process (HCFA Pub. 13–3) (Superintendent of Documents No. HE 22.8/6)
1748	• Electronic Data Interchange Security, Privacy, Audit and Legal Issues. Contractor Data Security and Confidentially Requirements. Electronic Data Interchange Audit Trail. Security-Related Requirements for Subcontractor Arrangements With Network Services.
1749	• Completing Quarterly Report on Provider Enrollment. Checking Reports. Type of Provider. Completing Lines Twenty-Seven Through Thirty-One—Age of Applications Pending. Completing Lines Thirty-Two Through Thirty-Seven—Change of Ownership Workloads.

ADDENDUM III.—MEDICARE AND MEDICAID MANUAL INSTRUCTIONS—Continued

[July 1998 Through September 1998]

Trans. No.	Manual/Subject/Publication No.
1750	• Requirements for Submission of Electronic Media Claims Data.
1751	• Pneumococcal Pneumonia, Influenza Virus and Hepatitis B Vaccines. Mammography Screening.
1752	• Millennium Readiness.
	Carriers Manual Part 3—Claims Process (HCFA Pub. 14–3) (Superintendent of Documents No. HE 22.8/7)
1609	• Electronic Data Interchange Security, Privacy, Audit and Legal Issues. Contractor Data Security and Confidentiality Requirements. Audit Trails. Security-Related Requirements for Subcontractor Arrangements With Network Services.
1610	• The System for Processing Electronic Media Claims. Electronic Media Claims Testing and Verification.
1611	• Identifying a Screening Mammography Claim. Adjudicating the Claim.
	Program Memorandum Intermediaries (HCFA Pub. 60A) (Superintendent of Documents No. HE 22.8/6–5)
A–98–21	• Payment to Hospitals for Direct Costs of Graduate Medical Education and Operating Indirect Medical Education Costs for Medicare+Choice Enrollees.
A–98–22	• Hospital Encounter Data Requirements From the Balanced Budget Act of 1997.
A–98–23	• Coding for Adequacy of Hemodialysis Dialysis on Claim Form—Additional Modifier.
A–98–24	• Change to Reporting of Outpatient Rehabilitation Services and All Comprehensive Outpatient Rehabilitation Facilities Services Using HCFA Common Procedure Coding System.
A–98–25	• Home Health Agency Surety Bond Requirements.
A–98–26	• Prospective Payment System PRICER Changes for Fiscal Year 1999, Including Changes for Discharges to Post-Acute Care Providers and a Millennium Compliant Provider Specific File.
A–98–27	• Hospice Provisions Enacted by the Balanced Budget Act of 1997.
A–98–28	• Medicare Home Health Benefit—The Balanced Budget Act of 1997—Clarification of Part-Time or Intermittent Skilled Nursing Care.
A–98–29	• UB–92 Claims That Are Not Millennium Compliant.
A–98–30	• Extension of the Effective Date for Intermediary Usage of the 4A.01 Implementation of the Version 3051 Based 835 Transaction for Electronic Remittance Advice.
A–98–31	• Discharges to Swing Bed Units and Other Post-Acute Care Providers.
	Program Memorandum Carriers (HCFA Pub. 60B) (Superintendent of Documents No. HE 22.8/6–5)
B–98–25	• Changes to Correct Coding Edits, Version 4.1.
B–98–26	• Durable Medical Equipment Regional Carrier Instructions to Implement Balanced Budget Act of 1997 Provisions § 4105 to Provide Expanded Coverage of Blood Glucose Monitors and Test Strips for all Diabetics—Implement July 1, 1998.
B–98–27	• Implementation of Additional Commercial Edits Effective for Dates of Service on or after October 1, 1998.
B–98–28	• Modifications to Form HCFA–1500 Instructions.
B–98–29	• Private Contracts Between Beneficiaries and Physicians/Practitioners.
B–98–30	• Millennium Changes for Forms HCFA–1491, 1490S, and 1490U.
B–98–31	• Change to Health Insurance Claim Form HCFA–1500 Instructions for Processing Physician Claims in Global Payment Systems.
B–98–32	• Changes to the 1998 Medicare Physician Fee Schedule Database.
B–98–33	• Durable Medical Equipment Carrier Operating Instructions to Implement Balanced Budget Act of 1997 Provisions § 4105 to Provide Expanded Coverage of Blood Glucose Monitors and Test Strips for All Diabetes. Implement July 1, 1998. (Corrects and updates Transmittal B–98–17, dated April 1998, Change Request #485).
B–98–34	• Elimination of Funding Toll-Free Lines for Participating Physicians and Suppliers.
B–98–35	• Receipt of Electronic Claims That Are Not Millennium Compliant.
B–98–36	• This document will be released in the fourth Quarter **Federal Register** Notice.
B–98–37	• Requiring Entities Who Are Ineligible to Receive Direct Medicare Payments for Services Provided by Independent Contractors to Comply with 42 USC 1395u(b)(6), and Medicare Regulations in 42 CFR 424.80(b).
	Program Memorandum Intermediaries/Carriers (HCFA Pub. 60A/B)(Superintendent of Documents No. HE 22.8/6–5)
AB–98–32	• Standardization of Medicare Coverage of Bone Marrow Measurements.
AB–98–33	• Medicare Travel Allowance Fees for Collection of Specimens.
AB–98–34	• Modifications of Medicare Policy for Erythropoietin.
AB–98–35	• Consolidated Billing for Skilled Nursing Facilities—The Balanced Budget Act of 1997.
AB–98–36	• Coverage of Diabetes Outpatient Self-Management Training Services, Effective: July 1, 1998.

ADDENDUM III.—MEDICARE AND MEDICAID MANUAL INSTRUCTIONS—Continued

[July 1998 Through September 1998]

Trans. No.	Manual/Subject/Publication No.
AB–98–37	• Contractor Coordination of Benefits File Formats and Trading Partner Agreements.
AB–98–38	• Distribution of 1/98 Versions of Form HCFA–855.
AB–98–39	• FDA Approves Two Cancer Tests, the Abbott AxSYM CA 15–3 test and the Abbott Imx CA 15–3 test.
AB–98–40	• New Interest Rate Payable on Clean Claims Not Paid Timely.
AB–98–41	• Promoting Influenza and Pneumococcal Vaccinations.
AB–98–42	• Revision of Troponin (CPT Code 84484 and 84512) Policy.
AB–98–43	• New Waived Tests.
AB–98–44	• Suspension of National Coverage Policy on Electrostimulation for Wound Healing.
AB–98–45	• Consolidated Billing for Skilled Nursing Facilities.
AB–98–46	• Notice of New Interest Rate for Medicare Overpayments and Underpayments.
AB–98–47	• Health Care Financing Administration Public Awareness Activities.
AB–98–48	• Year 2000 Contingency for Non-Millennium Compliant Electronic Transactions and Publication of Year 2000 Article in Provider Bulletins.
AB–98–49	• New Waived Tests.
AB–98–50	• Physician Ownership and Compensation Interest System.
AB–98–51	• Implementation of Section 4105 of the Balanced Budget Act Regarding Coverage of Diabetes Outpatient Self-Management Training Services.
AB–98–52	• Interim Tracking Procedures for Implementing the Medicare Fraud and Abuse Incentive Reward Program.
	State Operations Manual **Provider Certification** **(HCFA Pub. 7)** **(Superintendent of Documents No. HE 22.8/12)**
3	• Medicare Health Care Provider/Supplier Enrollment. Prioritizing State Agency Survey Workload—Initial Surveys and Recertifications. Transmitting Materials. List of Documents in Certification Packet. Notification to Application that the Medicare General Enrollment Health Care Provider/Supplier Application has been Denied. Notification of Pending Involuntary Termination Based on Change of Home Ownership Review of the Medicare General Enrollment Health Care Provider/Supplier Application. Notification of Involuntary Termination Based on Change of Home Ownership Review of the Medicare General Enrollment Health Care Provider/Supplier Application. Medicare and Other Federal Health Care Program General Enrollment Health Care Provider/Supplier Application. Medicare and Other Federal Health Care Program Change of Information Health Care Provider/Supplier Application. Medicare and Other Federal Health Care Program Individual Reassignment of Benefits Health Care Provider/Supplier Application.
	Peer Review Organization Manual **(HCFA Pub. 19)** **(Superintendent of Documents No. HE 22.8/8–15)**
66	• Introduction. Definition. Requirements. Disagreements.
67	• Opportunity to Discuss. Authority. Scope of Review. Referrals. Receive Medical Records. Request for a Review. Timing of Rereview.
68	• Interaction with Beneficiary Groups. Evaluation.
	Hospital Manual **(HCFA Pub. 10)** **(Superintendent of Documents No. HE 22.8/2)**
730	• Billing for Mammography Screening.
	Skilled Nursing Facility Manual **(HCFA Pub. 12)** **(Superintendent of Documents No. HE 22.8/3)**
354	• Billing for Mammography Screening.

ADDENDUM III.—MEDICARE AND MEDICAID MANUAL INSTRUCTIONS—Continued

[July 1998 Through September 1998]

Trans. No.	Manual/Subject/Publication No.
	End Stage Renal Disease Network Organizations Manual (HCFA Pub. 81) (Superintendent of Documents No. HE 22.9/4)
7	• Background and Responsibilities. Authority. Purpose of End Stage Renal Disease Network Organizations. Requirements for End Stage Renal Disease Network Organizations. Responsibilities of End Stage Renal Disease Network Organizations. Health Care Quality Improvement Program. Goals. Network Organization's Role in Health Care Quality Improvement Program. Organizational Structure. Network Council. Board of Directors. Medical Review Board. Other Committees. Network Staff. Required Administrative Reports. Internal Quality Control Program. Health Care Financing Administration Meetings. Cooperative Activities with State Survey Agencies and Peer Review Organizations. Annual Report Format. Statutory and Regulatory Requirements. General Requirements. Nonconfidential Information. Confidential Information. Disclosure of Network Deliberations. Disclosure of Confidential Network Information to Officials and Agencies. Disclosure of Network Information Involving Beneficiary Complaints. Disclosure of Network Information for Research Purposes. Disclosure of Network Sanction Information. Redisclosure of Network Information.
8	• Authority. End Stage Renal Disease Health Care Quality Improvement Program. Responsibilities. Quality of Care Improvement Projects. Components of Quality of Care Improvement Projects. Developing and Planning the Project. Identifying and Confirming an Opportunity to Improve Care. Developing a Network Intervention Activity. Measuring Impact and Project Evaluation. Disseminating Results. Identifying Additional Opportunities for Improvement. Project Reporting System. Improvement Plan. End Stage Renal Disease Core Clinical Indicators. Core Indicators—Network National Sample. Core Indicators—Sampling Method. Core Indicators—Data Collection. Core Indicators—Data Validation. Core Indicators—Data Reporting. Health Care Financing Administration-Compiled Data Reports. Quality Improvement Projects Versus Research Studies. Network Resources to Support the National Renal Registry. Core Indicators—Targeted Patient Population, and Clinical Measures. Annual Patient Sample Per Network for Conducting National Renal Registry Special Studies. Network Quality Improvement Project Report.
	Provider Reimbursement Manual—Part 1 (HCFA Pub. 15–1) (Superintendent of Documents No. HE 22.8/4)
405	Low Medicare Volume Prospective Payment Rates for Skilled Nursing Facilities Effective for Cost Reporting Periods Beginning on or After October 1, 1986 and Prior to Cost Reporting Periods Beginning on or After July 1, 1998. Calculation of the Low Medicare Volume Prospective Payment Rate. Methodology for Determining Per Diem Prospective Payment Rates Effective for Cost Reporting Periods Beginning on or After October 1, 1977 and Before July 1, 1998. General Provisions.

ADDENDUM III.—MEDICARE AND MEDICAID MANUAL INSTRUCTIONS—Continued

[July 1998 Through September 1998]

Trans. No.	Manual/Subject/Publication No.
	Methodology for Determining Per Diem Prospective Payment Rates Effective for Cost Reporting Periods Beginning on or After July 1, 1998.
	Determination of Facility Specific Per Diem Rates.
	Calculating Payment Under Skilled Nursing Facility Prospective Payment System.
	Use of Skilled Nursing Facility PRICER.
	Skilled Nursing Facility Prospective Payment System—Payment Requirements and Adjustments.
	Reporting Rehabilitative Therapy Minutes on the Minimum Data Set for Purposes of Medicare Payment.
406	Principle of Cost Apportionment.
	State Medicaid Manual—Part 2 State Organization and General Administration (HCFA Pub. 45–2) (Superintendent of Documents No. HE 22.8/10)
90	Annual Report on Home and Community-Based Services Waivers.
91	Statistical Report on Medical Care: Eligibles, Recipients, Payments and Services.
	Federal Reporting Requirements.
	Requirements for the Medicaid Statistical Information System.
	State Medicaid Manual—Part 5 Early and Periodic Screening, Diagnosis, and Treatment (HCFA Pub. 45–5) (Superintendent of Documents No. HE 22.8/10)
12	Screening Service Content.
	State Medicaid Manual—Part 6 Payment for Services (HCFA Pub. 45–6) (Superintendent of Documents No. HE 22.8/10)
35	• Upper Limits for Prescription Drugs.
	State Medicaid Manual—Part 11 Medicaid Management Information System (HCFA Pub. 45–11) (Superintendent of Documents No. HE 22.8/10)
18	• Background.
	Applicable Federal Approval Requirements.
	Approval Process and Documentation Submissions.
	List of Reimbursable Costs for State Systems.
	Eligibility Verification Systems, Switching Companies, Electronic Claims Capture, and Electronic Claims Management System-Overview.
	Electronic Fund Transfer and Electronic Remittance Advices.
	General (System) Requirements.
	Future Additional System Requirements.
	Claims Processing Subsystem.
	Data Requirements.
	Applicable Federal Approval Requirements.
	Acquisition of Automated Data Processing Equipment and Services.
	Implementation Advance Planning Document.
	Approval Process and Documentation Submissions.
	Cost Reimbursable at 75 Percent Federal Financial Participation.
	Cost Reimbursable at 75 Percent Federal Financial Participation for Management Administration Reporting Subsystem and Surveillance and Utilization Review Subsystem.
	List of Reimbursable Costs for State Systems.
	Definitions.
	Considerations and Options.
	Detailed Implementation Schedule.
	Projected Reporting Requirements.
	Preliminary Evaluation.
	Contractual Services.
	Required Assurances.
	Replacement Systems.
	Approval Process and Documentation Submissions.
	Approval of Eligibility Determination Systems—Required System Documentation for Onsite Review.
	General Requirements.
	List of Reimbursable Costs for State Systems.
	Approval of Eligibility Determination Systems.
	Enumeration Verification System as a Component of Medicaid Management Information System.
	Surveillance and Utilization Review Subsystem.

ADDENDUM III.—MEDICARE AND MEDICAID MANUAL INSTRUCTIONS—Continued

[July 1998 Through September 1998]

Trans. No.	Manual/Subject/Publication No.
Program Memorandum Regional Office—General (HCFA Pub. 51) (Superintendent of Documents No. HE 22.28/5:90–1)	
98–3	• Home Health Agency Surety Bond Requirements.
Program Memorandum State Survey Agencies (HCFA Pub. 65) (Superintendent of Documents No. HE 22.8/6–5)	
98–1	• Home Health Agency Parent, Branch, and Subunit Criteria.
Medicare/Medicaid Sanction—Reinstatement Report (HCFA Pub. 69)	
98–7	• Report of Physicians/Practitioners, Providers and/or Other Health Care Suppliers Excluded/Reinstated—June 1998.
97–8	• Report of Physicians/Practitioners, Providers and/or Other Health Care Suppliers Excluded/Reinstated—July 1998.
97–9	• Report of Physicians/Practitioners, Providers and/or Other Health Care Suppliers Excluded/Reinstated—August 1998.

ADDENDUM IV—REGULATION DOCUMENTS PUBLISHED IN THE FEDERAL REGISTER

Publication date	FR Vol. 63 page	CFR part(s)	File code*	Regulation title	End of comment period	Effective date
07/06/98	36488	422	HCFA–1030–IFC	Medicare Program; Establishment of the Medicare+Choice Program; Correction.		07/06/98
07/13/98	37498–37499	409, 410, 411, 413, 424, 483, and 489.	HCFA–1913–N	Medicare Program; Prospective Payment System and Consolidated Billing for Skilled Nursing Facilities; Extension of Comment Period.	09/11/98	
07/29/98	40534–40536		HCFA–3009–N	Medicare Program; Peer Review Organization Contracts: Solicitation of Statements of Interest From In-State Organizations—Alaska, Delaware, the District of Columbia, Hawaii, Idaho, Illinois, Kentucky, Maine, Nebraska, Nevada, South Carolina, Vermont, and Wyoming.	08/28/98	
07/31/98	40954–41131	405, 412, and 413.	HCFA–1003–F	Medicare Program; Changes to the Hospital Inpatient Prospective Payment Systems and Fiscal Year 1999 Rates		10/01/98
07/31/98	41170–41171	441 and 489	HCFA–1152–2–F	Medicare and Medicaid Programs; Surety Bond Requirements for Home Health Agencies		07/31/98
08/06/98	42055		HCFA–2030–N	Medicaid Program; Decision on Funding for the AIDS Healthcare Foundation START Program		
08/07/98	42270–42275	233	HCFA–2106–FC	Medicaid and Title IV–E Programs; Revision to the Definition of an Unemployed Parent.	10/06/98	08/07/98
08/11/98	42912–42938		HCFA–1035–NC	Medicare Program; Schedules of Per-Visit and Per-Beneficiary Limitations on Home Health Agency Costs for Cost Reporting Periods Beginning On or After October 1, 1998.	10/13/98	10/01/98
08/11/98	42797–42801413		HCFA–1883–P	Medicare Program; Revision of the Procedures for Requesting Exceptions to Cost Limits for Skilled Nursing Facilities and Elimination of Reclassifications.	10/13/98	
08/11/98	42796		HCFA–3250–N	Medicare Program; Negotiated Rulemaking; Coverage and Administrative Policies for Clinical Diagnostic Laboratory Tests; Change in Meeting Time.		
08/11/98	42857–42864		HCFA–9879–N	Medicare and Medicaid Programs; Quarterly Listing of Program Issuances—Fourth Quarter 1997.		
08/14/98	43655	416 and 488	HCFA–1885–N	Medicare Program; Update of Rate-setting Methodology, Payment Rates, Payment Policies, and the List of Covered Procedures for Ambulatory Surgical Centers Effective October 1, 1998; Extension of Comment Period.	09/10/98	

ADDENDUM IV—REGULATION DOCUMENTS PUBLISHED IN THE FEDERAL REGISTER—Continued

Publication date	FR Vol. 63 page	CFR part(s)	File code*	Regulation title	End of comment period	Effective date
09/08/98	47506–47513		HCFA–1045–N	Medicare Program; Request for Public Comments on Implementation of Risk Adjusted Payment for the Medicare+Choice Program and Announcement of Public Meeting.	10/06/98	
09/08/98	47513–47514		HCFA–1046–N	Medicare Program; September 23 and 24, 1998, Meeting of the Competitive Pricing Advisory Committee		
09/08/98	47552–48036	409, 410, 411, 412, 413, 419, 489, 493, and 1003.	HCFA–1005–P	Medicare Program; Prospective Payment System for Hospital Outpatient Services.	11/09/98	
09/10/98	48517		HCFA–3432–N	Medicare Program; September 25, 1998, Open Town Hall Meeting to Discuss the Medicare Coverage Process		
09/11/98	48735–48736		HCFA–2029–PN	Medicare and Medicaid Programs; Recognition of the Community Health Accreditation Program, Inc. (CHAP) and Joint Commission for Accreditation of Healthcare Organizations (JCAHO) for Hospices.	10/13/98	
09/11/98	48736–48737		HCFA–1097–N	Medicare Program; September 28, 1998, Meeting of the Practicing Physicians Advisory Council		
09/16/98	49598–49605		HCFA–9879–N	Medicare and Medicaid Programs; Quarterly Listing of Program Issuances—First Quarter, 1998		
09/22/98	50545–50547	405, 410, 413, 414, 415, 424, and 485.	HCFA–1006–CN	Medicare Program; Revisions to Payment Policies Under the Physician Fee Schedule for Calendar Year 1999; Correction		
09/23/98	50919–50920		HCFA–1047–NC	Medicare and Medicaid Programs; Announcement of Additional Applications From Hospitals Requesting Waivers for Organ Procurement Service Area.	11/23/98	
09/29/98	52022–52092	400, 430, 431, 434, 435, 438, 440, and 447.	HCFA–2001–P	Medicaid Program; Medicaid Managed Care.	11/30/98	

A*N—General Notice; PN—Proposed Notice; NC—Notice with Comment Period; FN—Final Notice; P—Notice of Proposed Rulemaking (NPRM); F—Final Rule; FC—Final Rule with Comment Period; CN—Correction Notice; IFC—Interim Final Rule with Comment Period

Addendum V—Categorization of Food and Drug Administration-Allowed Investigational Device Exemptions

Under the Food, Drug, and Cosmetic Act (21 U.S.C. 360c), devices fall into one of three classes. Also, under the new categorization process to assist HCFA, the Food and Drug Administration assigns each device with a Food and Drug Administration-approved investigational device exemption to one of two categories. To obtain more information about the classes or categories, please refer to the **Federal Register** notice published on April 21, 1997 (62 FR 19328).

The following information presents the device number, category (in this case, A), and criterion code.

G980020 A1
G980150 A1
G980164 A1
G980165 A1
G980171 A1
G980175 A1
G980176 A2
G980185 A2
G980202 A1
G980207 A1
G980212 A1

The following information presents the device number, category (in this case, B), and criterion code.

G970277 B4
G980105 B2
G980108 B1
G980132 B
G980134 B1
G980135 B2
G980136 B2
G980140 B2
G980142 B2
G980144 B2
G980146 B2
G980147 B4
G980152 B2
G980156 B2
G980157 B2
G980160 B4
G980161 B4
G980162 B4
G980163 B4
G980166 B1
G980169 B1
G980174 B1
G980180 B4
G980181 B4
G980182 B4
G980184 B4
G980190 B
G980192 B4
G980194 B4
G980196 B1
G980197 B4
G980198 B3
G980200 B1
G980201 B1
G980205 B4
G980206 B4
G980208 B3
G980209 B2
G980210 B2
G980211 B2
G980213 B2
G980217 B4
G980218 B5
G980219 B4

[FR Doc. 99–11754 Filed 5–10–99; 8:45 am]

BILLING CODE 4120–10–P

DEPARTMENT OF HEALTH AND HUMAN SERVICES

National Institute of Health

Propsoed Collection; Comment Request; Evaluation of the NIDCD Partnership Program

SUMMARY: In compliance with the requirement of section 3506(c)(2)(A) of the Paperwork Reduction Act of 1995, for opportunity for public comment on proposed data collection projects, the National Institute on Deafness and Other Communication Disorders (NIDCD), the National Institutes of Health (NIH), will publish periodic summaries of proposed projects to be submitted to the Office of Management and Budget (OMB) for review and approval.

Proposed Collection:

Title: Evaluation of the NIDCD Partnership Program. *Type of Information Collection Request*: NEW. *Need and Use of Information Collection*: The NIDCD was established to support biomedical and behavioral research and research training in hearing, smell, balance, taste, voice, speech and language. Although minorities and women will dominate the work force within the next decade, both groups are underrepresented in the science and health professional field. Because of this concern, the NIDCD, with assistance from the Office of Research on Minority Health, established the Partnership Program in 1994 to increase the number of minority scientists and health care professionals doing research on communication and communication disorders. The proposed survey will yield data about: (1) Reasons for participation in the program; (2) satisfaction of participants with the program and (3) how participation in the program has lead to the pursuit of a career in the health field. The survey will track the Partnership Program's success at increasing the number of women and minorities who are scientists. *Frequency of Response*: One. *Affected Public*: Individuals. *Type of Respondent*: Partnership Program Participants. The annual reporting burden is as follows: *Estimated Number of Respondents*: 76; *Estimated Number of Responses per Respondent*: 1; *Average Burden Hours Per Response*: 0.5; and *Estimated Total Annual Burden Hours Requested*: 38. The annualized cost to respondents is estimated at: $380. There are no Capital Costs to report. There are no Operating or Maintenance Costs to report.

(Note: The following table is acceptable for the Respondent and Burden Estimate Information, if appropriate, instead of the text as shown above.)

Type of respondents	Estiamted number of respondents	Estimated number of responses per respondent	Average burden hours per response	Estimated total annual burden hours requested
Initial program participant survey	16	1	0.5	8
Follow up survey of participant	60	1	0.5	30
Total	76			38

Request for Comments

Written comments and/or suggestions from the public and affected agencies are invited on one or more of the following points: (1) Whether the proposed collection of information is necessary for fulfillment of the NIDCD mission, including whether the information will have practical utility; (2) the accuracy of the estimate of the burden of the proposed data collection, including the validity of the methodology; (3) ways to enhance the quality, utility, and clarity of the data collection and (4) ways to minimize the burden of the collection of information on the respondents, including appropriate use of automated collection techniques and information technology.

FOR FURTHER INFORMATION CONTACT: To request more information on the proposed project or to obtain a copy of the data collection plans and instruments, contact Ms. Kay Johnson, EEO Officer, Office of Equal Employment Opportunity, NIDCD, NIH, Building 31, Room 3C08, 31 Center Drive, Bethesda, MD 20892, or call non-toll-free number (301) 402–6415 or E-mail your request, including your address to: johnsoka@nidcd.nih.gov

COMMENTS DUE DATE: Comments regarding this information collection are best assured of having their full effect if received on or before July 12, 1999.

SUPPLEMENTARY INFORMATION: Under the PRA (44 U.S.C. 3501–3520), Federal agencies must obtain approval from the Office of Management and Budget (OMB) for each collection of information they conduct or sponsor. ''Collection of information'' is defined in 44 U.S.C. 3502(3) and 5 CFR 1320.3(c) and includes agency requests or requirements that the public submit reports, keep records, or provide information to a third party. Section 3506(c)(2)(A) of the PRA requires federal agencies to provide a 60-day notice in the **Federal Register** concerning proposed collections of information before submitting the collection of OMB for approval. To comply with this requirement, NIDCD is publishing notice of the proposed collection of information listed below.

With respect to the following collection of information, NIDCD invites comments on: (1) Whether the proposed collection of information is necessary for fulfillment of the NIDCD mission, including whether the information will have practical utility; (2) the accuracy of the estimate of the burden of the proposed data collection, including the validity of the methodology; (3) ways to enhance the quality, utility, and clarity of the data collection; and (4) ways to minimize the burden of the collection of information on the respondents, including appropriate use of automated collection techniques and information technology.

The NIDCD Partnership Program was designed to maximize research and research training opportunities for undergraduates, graduate and professional students, and faculty from populations that are underrepresented in the biomedical professions. Participants are recruited from four academic institutions that developed partnerships with the NIDCD: The University of Alaska System, The Atlanta University Center, Gallaudent University, and the University of Puerto Rico.

Anecdotal feedback indicates that program participants, mentors, and liaisons find the program to provide interesting and unique opportunities. However, there is little systematic evidence evaluating the level of the Program's success or failure. The proposed surveys will attempt to assess

how participants' experiences with the Partnership Program have influenced career and educational choices; current activities of participants (e.g., courses of study, jobs); benefits and costs of program participation to the program participants, mentors, and liaisons; and suggestions for improving the Program. This information will provide concrete evidence for continued funding of the Program.

Two separate surveys are proposed. The first survey will collect baseline information from participants as they enter the program. The baseline survey will explore participants' expectations and goals on entering the program, their current career and/or educational plans, and reasons for choosing to participate. The second survey will gather Follow up and tracking information of past participants and will be administered annually. This survey will ask about current contact information, current career and/or educational activities, satisfaction with the program, and whether expectations were met.

Potential respondents of either survey will be asked to participate in a telephone survey that should take less than 30 minutes to complete. Respondents who cannot schedule 30 minutes of time or have communications disorders which make telephone conversations difficult will be given the opportunity to respond by alternate means such as fax and e-mail. All participants from the inception of the program will be included in this evaluation process. Participants for 1999 have not yet been chosen, but it is anticipated that the total number of participants since 1994 will not exceed 70.

Dated: May 4, 1999.

David Kerr,

Executive Officer, National Institutes on Deafness and Other Communication Disorders.

[FR Doc. 99–11840 Filed 5–10–99; 8:45 am]

BILLING CODE 4140–01–M

DEPARTMENT OF HEALTH AND HUMAN SERVICES

National Institutes of Health

National Institute of Arthritis and Musculoskeletal and Skin Diseases; Notice of Closed Meeting

Pursuant to section 10(d) of the Federal Advisory Committee Act, as amended (5 U.S.C. Appendix 2), notice is hereby given of the following meeting.

The meeting will be closed to the public in accordance with the provisions set forth in sections 552b(c)(4) and 552b(c)(6), Title 5 U.S.C., as amended. The grant applications and the discussions could disclose confidential trade secrets or commercial property such as patentable material, and personal information concerning individuals associated with the grant applications, the disclosure of which would constitute a clearly unwarranted invasion of personal privacy.

Name of Committee: National Institute of Arthritis and Musculoskeletal and Skin Diseases Special Emphasis Panel.

Date: May 7, 1999.

Time: 11 AM to 12:30 PM.

Agenda: To review and evaluate grant applications.

Place: 45 Natcher Bldg, Rm 5As.25u, Bethesda, MD 20892, (Telephone Conference Call).

Contact Person: Tommy L. Broadwater, PHD, Chief, Grants Review Branch, National Institutes of Health NIAMS, Natcher Bldg., Room 5As25U, Bethesda, MD 20892, 301–594–4952.

This notice is being published less than 15 days prior to the meeting due to the timing limitations imposed by the review and funding cycle.

(Catalogue of Federal Domestic Assistance Program Nos. 93.846, Arthritis, Musculoskeletal and Skin Diseases Research, National Institutes of Health, HHS)

Dated: May 5, 1999.

LaVerne Y. Stringfield,

Director, Office of Federal Advisory Committee Policy.

[FR Doc. 99–11838 Filed 5–10–99; 8:45 am]

BILLING CODE 4140–01–M

DEPARTMENT OF HEALTH AND HUMAN SERVICES

National Institutes of Health

Office of Recombinant DNA Activities; Recombinant DNA Research: Action Under the Guidelines

AGENCY: National Institutes of Health (NIH), PHS, DHHS.

ACTION: Notice of action under the NIH Guidelines for Research Involving Recombinant DNA Molecules (NIH Guidelines).

SUMMARY: This notice sets forth an action to be taken by the Director, National Institutes of Health (NIH), under the NIH Guidelines for Research Involving Recombinant DNA Molecules (59 FR 34496, amended 59 FR 40170, 60 FR 20762, 61 FR 1482, 61 FR 10004, 62 FR 4782, 62 FR 53335, 62 FR 56196, 62 FR 59032, 63 FR 8052, 63 FR 26018).

FOR FURTHER INFORMATION CONTACT: Background documentation and additional information can be obtained from the Office of Recombinant DNA Activities (ORDA), National Institutes of Health, MSC 7010, 6000 Executive Boulevard, Suite 302, Bethesda, Maryland 20892–7010, Phone 301–496–9838, FAX 301–496–9839. The ORDA web site is located at http://www.nih.gov/od/orda/ for further information about the office.

SUPPLEMENTARY INFORMATION: Today's action is being promulgated under the NIH Guidelines for Research Involving Recombinant DNA Molecules (NIH Guidelines). The proposed action was published for comment in the **Federal Register** on February 17, 1999 (64 FR 7964), and reviewed by the NIH Recombinant DNA Advisory Committee (RAC) at its meeting on March 11, 1999.

I. Amendment to Appendix B–I, Risk Group 1 (RG1) Agents

I–A. Background Information and Decisions on Action Under the NIH Guidelines

On December 11, 1998, ORDA received a facsimile from Dr. Margarita C. Curras-Collazo, University of California at Riverside, Riverside, California, requesting to lower the containment level (from Biosafety Level (BL) 2 to 1) for recombinant adeno-associated virus (AAV) vectors produced in the absence of helper viruses. Subsequent to this request, ORDA received a telephone call from Ms. Brenda Wong, Biological Safety Officer, University of California at San Diego, La Jolla, California, asking that this request be reconsidered due to the potential of insertional mutagenesis.

In response to this request, ORDA solicited the opinion of three AAV experts and the RAC Chair. All three AAV experts and the RAC Chair concurred that the BL1 level of physical containment is appropriate for recombinant AAV vectors produced in the absence of helper viruses. The rationale for this recommendation was based on the fact that experiments involving certain recombinant retroviral vectors, which insert randomly into the genome and could potentially cause insertional mutagenesis, are designated as BL1 agents.

Appendix B–I, Risk Group 1 (RG1) Agents, currently reads:

''RG1 agents are not associated with disease in healthy adult humans. Examples of RG1 agents include asporogenic Bacillus subtilis or Bacillus licheniformis (see Appendix C–IV–A, Bacillus subtilis or Bacillus licheniformis Host-Vector Systems, Exceptions), Escherichia coli-K12 (see Appendix C–II–A, Escherichia coli K–12 Host Vector Systems, Exceptions), and

adeno-associated virus types 1 through 4.

''Those agents not listed in Risk Groups (RGs) 2, 3 and 4 are not automatically or implicitly classified in RG1; a risk assessment must be conducted based on the known and potential properties of the agents and their relationship to agents that are listed.''

Appendix B–1, *Risk Group 1 (RGI) Agents,* is proposed to read:

''RGI agents are not associated with disease in healthy adult humans. Examples of RG1 agents include asporogenic *Bacillus subtilis* or *Bacillus licheniformis* (see Appendix C–IV–A, *Bacillus subtilis* or *Bacillus licheniformis* Host-Vector Systems, Exceptions), *Escherichia coli* K–12 (see Appendix C–II–A, *Escherichia coli* K–12 Host Vector Systems, Exceptions), adeno-associated virus types 1 through 4, and recombinant AAV constructs, in which the transgene does no encode either a tumor suppressor or a toxin molecule and are produced in the absence of a helper virus.

''Those agents not listed in Risk Groups (RGs) 2, 3 and 4 are not automatically or implicitly classified in RG1; a risk assessment must be conducted based on the known and potential properties of the agents and their relationship to agents that are listed.''

The proposed action was published in the **Federal Register** on February 17, 1999 (64 FR 7964) for public comment.

On March 11, 1999, the RAC discussed the proposed action to Appendix B–I with the opinions of AAV experts and the RAC Chair. A motion was made to accept the proposed action that the BL1 physical containment is appropriate for recombinant AAV vectors produced in the absence of helper viruses with a minor change. In the last sentence of the first paragraph delete ''tumor suppressor'' and insert ''potentially tumorigenic gene product.'' The motion passed by a vote of 11 in favor, 0 opposed, and no abstentions.

The action is detailed in Section I–B—Summary of Action. I accept the RAC recommendation, and the *NIH Guidelines* will be amended accordingly.

I–B. Summary of Action

I–B–1. Amendment of Appendix B–1, Risk Group 1 (RG1) Agents

Appendix B–1 is to be amended to read:

''RG1 agents are not associated with disease in healthy adult humans. Examples of RG1 agents include asporogenic *Bacillus subtilis* or *Bacillus licheniformis* (see Appendix C–IV–A, *Bacillus subtilis* or *Bacillus licheniformis* Host-Vector Systems, Exceptions), *Escherichia coli* K–12 (see Appendix C–II–A, *Escherichia coli* K–12 Host Vector Systems, Exceptions), adeno-associated virus (AAV) types 1 through 4, and recombinant AAV constructs, in which the transgene does not encode either a potentially tumorigenic gene product or a toxin molecule and are produced in the absence of a helper virus.

''Those agents not listed in Risk Groups (RGs) 2, 3 and 4 are not automatically or implicitly classified in RG1; a risk assessment must be conducted based on the known and potential properties of the agents and their relationship to agents that are listed.''

OMB's ''Mandatory Information Requirements for Federal Assistance Program Announcements'' (45 FR 39592) requires a statement concerning the official government programs contained in the Catalog of Federal Domestic Assistance. Normally, NIH lists in its announcements the number and title of affected individual programs for the guidance of the public. Because the guidance in this notice covers virtually every NIH and Federal research program in which recombinant DNA techniques could be used, it has been determined not to be cost effective or in the public interest to attempt to list these programs. Such a list would likely require several additional pages. In addition, NIH could not be certain that every Federal program would be included as many Federal agencies, as well as private organizations, both national and international, have elected to follow the *NIH Guidelines.* In lieu of the individual program listing, NIH invites readers to direct questions to the information address above about whether individual programs listed in the Catalog of Federal Domestic Assistance are affected.

Dated: April 29, 1999.

Harold Varmus,

Director, National Institutes of Health.

[FR Doc. 99–11839 Filed 5–10–99; 8:45 am]

BILLING CODE 4140–01–M

DEPARTMENT OF THE INTERIOR

Fish and Wildlife Service

Notice To Extend the Public Comment Period for the Draft Recovery Plan for Gabbro Soil Plants of the Central Sierra Nevada Foothills, CA

AGENCY: Fish and Wildlife Service, Interior.

ACTION: Notice of extension of public comment period.

SUMMARY: The U.S. Fish and Wildlife Service gives notice that the comment period announced in the March 8, 1999, notice of availability of the Draft Recovery Plan for Gabbro Soil Plants of the Central Sierra Nevada Foothills, California, will be extended an additional 30 days until July 7, 1999. Substantial public interest in the draft plan led the Service to distribute additional copies and to provide additional opportunities for the public to comment on the plan. This recovery plan includes six plant species, of which five are federally listed as endangered or threatened. The draft plan includes recovery criteria and measures for the plants—Stebbin's morning-glory (*Calystegia stebbinsii*), Pine Hill ceanothus (*Ceanothus roderickii*), Pine Hill flannelbush (*Fremontodendron californicum ssp. decumbens*), El Dorado bedstraw (*Galium californicum ssp. sierrae*), and Layne's butterweed (*Senecio layneae*), and an additional species, El Dorado mule-ears (*Wyethia reticulata*), that is considered to be a species of concern. The Service extends the current 90-day comment period and solicits review and comment from the public on this draft plan.

DATES: Comments on the draft recovery plan received by July 7, 1999, will be considered by the Service.

ADDRESSES: Copies of the draft recovery plan are available for inspection, by appointment, during normal business hours at the following location: U.S. Fish and Wildlife Service, Sacramento Fish and Wildlife Office, 3310 El Camino Avenue, Suite 130, Sacramento, California (telephone (916) 979–2710); and U.S. Fish and Wildlife Service, Regional Office, Ecological Services, 911 NE 11th Ave., Eastside Federal Complex, Portland Oregon 97232–4181 (telephone (503) 231–6131). Requests for copies of the draft recovery plan and written comments and materials regarding this plan should be addressed to Wayne S. White, Field Supervisor, Ecological Services, at the above Sacramento address.

FOR FURTHER INFORMATION CONTACT: Diane Elam, Fish and Wildlife Biologist, at the above Sacramento address.

SUPPLEMENTARY INFORMATION:

Background

Restoring endangered or threatened animals and plants to the point where they are again secure, self-sustaining members of their ecosystems is a primary goal of the Service's

endangered species program. To help guide recovery efforts, the Service is working to prepare recovery plans for most of the listed species native to the United States. Recovery plans describe actions considered necessary for the conservation of the species, establish criteria for downlisting or delisting listed species, and estimate time and cost for implementing the recovery measures needed. The Endangered Species Act of 1973, as amended (16 U.S.C. 1531 *et seq.*) (Act), requires the development of recovery plans for listed species unless such a plan would not promote the conservation of a particular species. Section 4(f) of the Act as amended in 1988 requires that public notice and an opportunity for public review and comment be provided during recovery plan development. The Service will consider all information presented during the public comment period prior to approval of each new or revised recovery plan. Substantive technical comments will result in changes to the plan. Substantive comments regarding recovery plan implementation may not necessarily result in changes to the recovery plan, but will be forwarded to appropriate Federal or other entities so that they can take these comments into account during the course of implementing recovery actions. Individualized responses to comments will not be provided. The six species of plants covered in the draft recovery plan are primarily restricted to gabbro soils habitat in the central Sierra Nevada foothills of California. Conversion of habitat to urban uses has extirpated the listed species and species of concern from a significant portion of their historic ranges. The remaining natural communities are highly fragmented, and many are marginal habitats in which these species may not persist during catastrophic events. The objectives of this recovery plan are two-fold: (1) to delist the plants Stebbin's morning-glory, Pine Hill ceanothus, Pine Hill flannelbush, El Dorado bedstraw, and Layne's butterweed by protecting, enhancing, restoring, and appropriately managing their habitat; and (2) to ensure the long-term conservation of the one species of concern, El Dorado mule-ears, that occurs in the same gabbro soils habitats with the listed species.

Public Comments Solicited

The Service solicits written comments on the draft recovery plan described. All comments received by the date specified above will be considered prior to approval of this plan.

Authority: The authority for this action is section 4(f) of the Endangered Species Act, 16 U.S.C. 1533(f).

Dated: May 5, 1999.

Elizabeth H. Stevens,

Acting Manager, California/Nevada Operations Office, Sacramento, California.

[FR Doc. 99–11775 Filed 5–10–99; 8:45 am]

BILLING CODE 4310–55–P

DEPARTMENT OF THE INTERIOR

Bureau of Land Management

[ID–957–1910–00–4817]

Idaho: Filing of Plats of Survey; Idaho

The plats of the following described land were officially filed in the Idaho State Office, Bureau of Land Management, Boise, Idaho, effective 9 a.m., on the date the plat was accepted.

The plat representing the dependent resurvey of portions of the east boundary and of the subdivisional lines, and the subdivision of section 25, and a metes-and-bounds survey in sections 25, T. 14 N., R. 43 E., Boise Meridian, Idaho, Group 960, was accepted March 29, 1999.

The plat representing the dependent resurvey of a portion of the subdivisional lines, and the subdivision of sections 16 and 17, T. 4 S., R. 5 E., Boise Meridian, Idaho, Group 1034, was accepted March 31, 1999.

These surveys were executed to meet certain administrative needs of the U.S. Forest Service and U.S. Air Force.

All inquiries concerning the survey of the above described land must be sent to the Chief, Cadastral Survey, Idaho State Office, Bureau of Land Management, 1387 S. Vinnell Way, Boise, Idaho, 83709–1657.

Dated: March 31, 1999.

Duane E. Olsen,

Chief Cadastral Surveyor for Idaho.

[FR Doc. 99–11842 Filed 5–10–99; 8:45 am]

BILLING CODE 4310–66–M

DEPARTMENT OF THE INTERIOR

Bureau of Land Management

(MT–924–1430–01; MTM 89001)

Notice of Proposed Withdrawal and Opportunity for Public Meeting; Montana

AGENCY: Bureau of Land Management, Interior.

ACTION: Notice.

SUMMARY: The Bureau of Land Management proposes to withdraw 760 acres of public land and 10 acres of non-federal land, if acquired, to protect the archaeological, educational, interpretive, and recreational integrity of the Four Dances Natural Area. This notice closes the land for up to 2 years from location and entry under the mining laws. The public land has been and will remain open to surface entry and mineral leasing.

DATES: Comments and requests for a public meeting must be received by August 9, 1999.

ADDRESSES: Comments and meeting requests should be sent to the Montana State Director, BLM, P.O. Box 36800, Billings, Montana 59107.

FOR FURTHER INFORMATION CONTACT: Sandra Ward, BLM Montana State Office, 406–255–2949, or June Bailey, Billings Field Office, 406–238–1543.

SUPPLEMENTARY INFORMATION: On April 21, 1999, a petition was approved allowing the Bureau of Land Management to file an application to withdraw the following described public land and non-federal land if acquired, from location and entry under the mining laws, subject to valid existing rights:

Principal Meridian, Montana

PARCEL A: Township 1 North, Range 26 East, of the Principal Montana Meridian, in Yellowstone County, Montana.

Section 34, S½ of lot 6.

EXCEPTING therefrom the following two tracts of land:

1. That part conveyed to the State of Montana for the benefit and use of its State Highway Commission by Bargain and Sale Deed recorded June l6, 1960, in Book 700, Page 407, under Document #643695, records of Yellowstone County, Montana, more particularly described as follows:

"938+00 to 945+63

A tract of land in the S½ of Lot 6, Section 34, Township 1 North, Range 26 East, M.P.M., Yellowstone County, Montana, more particularly described as follows:

All that land in said S½ of Lot 6 lying on the Northwesterly side of a line which is parallel to and 110 feet distant Southeasterly when measured at right angles from the following described center line:

Beginning at a point on the center line of Montana Interstate Highway Project I 90–8(5)433, which said point is South 2107.0 feet, and West 1434.7 feet, more or less, from the Northeast corner of said Section 34;

Thence from the said point of beginning North 71°09′30 East, 200.0 feet to a point;

Also all that land in said S½ of Lot 6 lying on the Northwesterly side of a line which is parallel to and 170 feet distant Southeasterly when measured at right angles from the following described center line;

Thence continuing from the last described point North 71°09′30″ East, 563.0 feet, more or less, to a point on the center line of said Montana Interstate Highway Project I 90–8(5)433, which said point is South 1860.5

feet, and West 712.6 feet, more or less, from the Northeast corner of said Section 34.''

2. Certificate of Survey No. 2933.

PARCEL B: Township 1 North, Range 26 East, of the Principal Montana Meridian, in Yellowstone County, Montana.

Section 34, lots 7 and 8, and SE¼SE¼.

PARCEL C: Township 1 North, Range 26 East, of the Principal Montana Meridian, in Yellowstone County, Montana.

Section 35, That part of the S½NW¼ lying South of the Main Canal of the Lockwood Irrigation Ditch and West of the Coburn Road as said Ditch and Coburn Road existed on September 19, 1940.

EXCEPTING therefrom the following 3 Tracts of Land:

1. That part conveyed to the State of Montana for the benefit and use of its State Highway Commission by Bargain And Sale Deed recorded February 25, 1964, in Book 783, Page 368, under Document #725524, records of Yellowstone County, Montana, more particularly described as follows:

''0+00.0 to 1+06.7 Connection Road to Coburn Lane

A tract of land in that particular tract of land which is described as the fractional S½NW¼ lying South of the Main Canal of the Lockwood Irrigation Ditch and West of the Coburn Road in Section 35, Township 1 North, Range 26 East, M.P.M., Yellowstone County, Montana. The tract of land to be conveyed being more particularly described as follows:

All that land in said particular tract of land lying Easterly of a line, which is increasing in distance from 40 feet distant Westerly to 70 feet distant Westerly when measured at right angles from the following described center line:

Beginning at Engineer's Station 0+00.0 on the center line of the connection road to Coburn Lane of the Montana State Highway Project I 90–8(5)433, which said Station 0+00.0 is South 1527.5 feet and West 0.2 feet, more or less, from the North Quarter corner of said Section 35;

Thence North 2°25′15″ East, 84.3 feet, to Engineer's Station 0+84.3 on said center line of the connection road to Coburn Lane, which said Station 0+84.3 is South 1443.3 feet, and East 3.4 feet, more or less, from said North Quarter corner of said Section 35;

Also all that land in said particular tract of land lying Easterly of a line which is parallel to and 70 feet distant Westerly when measured at right angles from the following described center line:

Beginning at Engineer's Station 0+93.0 on said center line of the connection road to Coburn Lane, which said Station 0+93.0 is South 1518.8 feet, and East 0.2 feet, more or less, from said North Quarter corner of said Section 35;

Thence North 4°39′19″ West, 75.6 feet, to Engineer's Station 1+68.6 on said center line of the connection road to Coburn Lane, which said Station 1+68.6 is South 1359.3 feet, and West 3.5 feet, more or less, from said North Quarter corner of said Section 35.

2. Certificate of Survey No. 2933.

3. Certificate of Survey No. 2932.

PARCEL D: Township 1 North, Range 26 East, of the Principal Montana Meridian, in Yellowstone County, Montana.

Section 35, That part of the SW¼ lying West of the County Road known as the Coburn Road as said Coburn Road existed on September 19, 1940.

PARCEL E: That part of E½NW¼ of Section 1, Township 1 South, Range 26 East, of the Principal Montana Meridian, in Yellowstone County, Montana, described as Certificate of Survey No. 827 on file in the office of the Clerk and Recorder of said County, under Document #629995.

PARCEL F: Township 1 South, Range 26 East, of the Principal Montana Meridian, in Yellowstone County, Montana.

Section 1, lot 4, NE¼SW¼NW¼ and S½SW¼NW¼;

EXCEPTING therefrom the following two Tracts of Land:

1. Certificate of Survey No. 2347–M.

2. Amended Tract 1, Certificate of Survey No. 2347–M.

PARCEL G: Township 1 South, Range 26 East, of the Principal Montana Meridian, in Yellowstone County, Montana.

Section 2, lots 7, 8, 9, 10 and 11, SE¼NE¼, and NE¼SE¼.

EXCEPTING therefrom the following two Tracts of Land:

1. Certificate of Survey No. 2347–M.

2. Amended Tract 1, Certificate of Survey No. 2347–M.

PARCEL H: Township 1 South, Range 26 East, of the Principal Montana Meridian, in Yellowstone County, Montana.

Section 1, SW¼;

EXCEPTING therefrom the following three Tracts of Land:

1. That part conveyed to the State of Montana for the benefit and use of its State Highway Commission by Bargain and Sale Deed recorded September 22, 1950, in Book 377, Page 461, under Document # 468688, records of Yellowstone County, Montana, more particularly described as follows:

''A tract of land in SE¼SE¼SW¼, Sec. 1, T. 1 S., R. 26 E., MPM, Yellowstone County, Montana, more particularly described as follows:

Beginning at a point in the said SE¼SE¼SW¼, which said Point is North 53.0 feet, and West 379.0 feet, more or less, from the South quarter corner of said Sec. 1; thence from said point of beginning N3l°12½′W., 285.9 feet; thence S 28° 47½′ W., 285.9 feet; thence N 88° 47½′ E., 285.9 feet to the point of beginning.''

2. That part described as Certificate Of Survey No. 823 on file in the office of the Clerk and Recorder of said County, under Document # 627700.

3. Certificate of Survey No. 2865.

PARCEL I: That part of the NW¼NW¼ of Section 1 and the NE¼NE¼ of Section 2, Township 1 South, Range 26 East, of the Principal Montana Meridian, in Yellowstone County, Montana, described as Tract 1, of Certificate of Survey No. 2347–M on file in the office of the Clerk and Recorder of said County, under Document # 1371733.

EXCEPT Amended Tract 1, Certificate of Survey No. 2347–M.

The area described contains approximately 760 acres in Yellowstone County.

Non-Federal Land

In addition, if the following described non-federal land is acquired by the United States, the land will be subject to the terms and conditions of this withdrawal:

T. 1 S., R. 26 E.,

Sec. 1, NW¼SW¼NW¼.

The area described contains approximately 10 acres in Yellowstone County.

For a period of 90 days from the date of publication of this notice, all persons who wish to submit comments, suggestions, or objections in connection with the proposed withdrawal may present their views in writing to the Montana State Director of the Bureau of Land Management.

Notice is hereby given that an opportunity for a public meeting is afforded in connection with the proposed withdrawal. All interested persons who desire a public meeting for the purpose of being heard on the proposed withdrawal must submit a written request to the Montana State Director within 90 days from the date of publication of this notice. Upon determination by the authorized officer that a public meeting will be held, a notice of the time and place will be published in the **Federal Register** at least 30 days before the scheduled date of the meeting.

The application will be processed in accordance with the regulations set forth in 43 CFR part 2300.

For a period of 2 years from the date of publication of this notice in the **Federal Register**, the land will be segregated as specified above unless the application is denied or canceled or the withdrawal is approved prior to that date. The temporary uses which may be permitted during this segregative period are hiking, picnicking, bird watching, vegetation inventories, environmental education, and other such activities that do not result in surface disturbance, but only with the approval of unauthorized officer of the Bureau of Land Management.

Dated: April 30, 1999.

Thomas P. Lonnie,

Deputy State Director, Division of Resources.

[FR Doc. 99–11844 Filed 5–10–99; 8:45 am]

BILLING CODE 4310–DQ–P

DEPARTMENT OF THE INTERIOR

Minerals Management Service

Outer Continental Shelf: Operations, Rescission of Certain Letters and Notices to Lessees and Operators (LTLs and NTLs)

AGENCY: Minerals Management Service (MMS), Interior.

ACTION: Notice.

SUMMARY: The MMS periodically issues letters and notices to lessees and operators of oil and gas or sulphur leases in the Outer Continental Shelf (OCS), commonly referred to as LTLs and NTLs. This **Federal Register** notice informs you that we are in the process of reviewing all of the regional LTLs and officially rescinding certain ones. We are also rescinding one NTL.

EFFECTIVE DATE: May 11, 1999.

ADDRESSES: You may obtain copies of NTLs (and LTLs for the Gulf of Mexico OCS Region) through our website at WWW.MMS.GOV or by contacting the National office or the OCS Region that issued the document at the following addresses:

National Office

Minerals Management Service, Engineering and Operations Division, 381 Elden Street, Herndon, VA 20170–4817, Attention: Ms. Alexis London; Telephone (703) 787–1600.

Alaska OCS Region

Minerals Management Service, 949 East 36th Avenue, Room 308, Anchorage, AK 99508–4363, Attention: Ms. Christine Huffaker; Telephone (907) 271–6621.

Gulf of Mexico OCS Region

Minerals Management Service, 1201 Elmwood Park Blvd., New Orleans, LA 70123–2394, Attention: Mr. Michael Dorner; Telephone (504) 736–2599.

Pacific OCS Region

Minerals Management Service, 770 Paseo Camarillo, Camarillo, CA 93010–6064, Attention: Ms. Freddie Mason; Telephone (805) 389–7566.

FOR FURTHER INFORMATION CONTACT: Alexis London, Engineering and Operations Division; Telephone (703) 787–1600.

SUPPLEMENTARY INFORMATION: The MMS is responsible for oil and gas or sulphur operations in the OCS to ensure operational safety and protection of the environment. In addition to our regulations, we issue NTLs to provide guidance and to further clarify, interpret, or describe regulatory requirements on a national or regional basis. In the past, our regional offices have also issued LTLs for this purpose or to communicate information to OCS lessees and operators.

Last year we reviewed all of the active NTLs to determine if they were still viable. As a result, we rescinded a number of NTLs in a **Federal Register** notice published on November 10, 1998 (63 FR 63071). We updated and reissued most of the remaining NTLs to reflect current technologies and to correct regulatory citations.

We are subjecting the regional LTLs to the same process. Our initial review has identified numerous LTLs that we can immediately rescind. Throughout the year, we will update the remaining LTLs that need to remain active. However, when we reissue them, they will be converted to NTLs. Once we complete this process, all LTLs will be eliminated. We will provide guidance and supplementary information through the use of NTLs only. This should provide a more uniform, consistent approach for the benefit of the users in keeping track of our guidance documents and informational issuances.

Effective with the publication of this notice, we are officially rescinding one NTL and a number of LTLs that are no longer current, have served their purpose, or because recently revised regulations and policies have eliminated the need for them. All other NTLs and LTLs that are currently in effect will remain in force until superseded or rescinded.

For the Gulf of Mexico OCS Region the following are rescinded or were recently superseded:

NTL 94–02, 2/24/94, Air Emissions Reporting Requirements
LTL, 5/30/96, Requirements for Submittal of Documents Under 30 CFR 250, Subpart I, Platforms and Structures (Superseded by NTL 99-G05)
LTL, 1/26/96, Transfer of Platform Records for Leases Reassigned
LTL, 12/7/95, Quality Assurance and Performance of Safety and Pollution Prevention Equipment
LTL, 10/30/95, Submittal of Logs or Charts of Electrical, Radioactive, Sonic, and Other Well-logging Operations (Superseded by NTL 97–06)
LTL, 2/13/95, Exploratory Well Requirements on 8-Year Leases
LTL, 11/17/94, Safety & Environmental Management Program (SEMP)
LTL, 4/14/94, Letter of Concurrence by Lessee of Record
LTL, 1/28/94, Policy Change Concerning the Overboard Disposal of Produced Solids Containing NORM
LTL, 1/14/94, Policy Concerning the Testing of Blowout Preventers (BOP's)
LTL, 1/14/94, Implementation of New Reporting Forms
LTL, 11/5/93, Surety Bond Requirements (Superseded by NTL 99–604)
LTL, 11/16/92, Providing Crude Oil, Condensate, and Natural Gas Liquids to Small and Independent Refiners
LTL, 12/11/91, Clarification of NORM Requirements (Superseded by NTL 96–03)
LTL, 6/13/91, Approvals to Obtain Prior to Commencing Well Operations
LTL, 4/25/91, Mail Stop Numbers for Production and Development
LTL, 11/20/90, Disposal of Solids Containing Naturally Occurring Radioactive Materials
LTL, 10/1/90, Submission of Wellbore & Directional Surveys (Superseded by NTL 97–06)
LTL, 5/14/90, Trash and Debris Washing Ashore
LTL, 5/8/90, Turtle Excluder Devices (TEDs)
LTL, 11/27/89, Release of Geological Data and Analyzed Geological Information
LTL, 6/7/89, Hydrogen Sulfide (H_2S) Information Requests

For the Pacific OCS Region the following are rescinded:
LTL, 6/5/96, Crane Operations
LTL, 9/19/95, Quality Assurance Certification Repair Parts
LTL, 11/1/94, Pressure Safety Devices Test Tolerance
LTL, 8/17/94, Helideck Conditions
LTL, 5/6/94, Supplemental Bonds
LTL, 3/19/91, Requirements for a Pressure Safety Valve (PSV) on Flare/Vent Scrubbers

Please note that the Alaska OCS Region has no LTLs or NTLs currently in effect.

Dated: April 30, 1999.

Carolita U. Kallaur,

Associate Director for Offshore Minerals Management.

[FR Doc. 99–11843 Filed 5–10–99; 8:45 am]

BILLING CODE 4310–MR–U

DEPARTMENT OF THE INTERIOR

Bureau of Reclamation

Meeting of the Conservation Advisory Group, Yakima River Basin Water Enhancement Project, Yakima, WA

AGENCY: Department of the Interior.

ACTION: Notice of Meeting.

SUMMARY: As required by the Federal Advisory Committee Act, notice is hereby given that the Conservation Advisory Group, Yakima River Basin Water Enhancement Project, Yakima, Washington, established by the Secretary of the Interior, will hold a public meeting. The purpose of the Conservation Advisory Group is to provide technical advice and counsel to the Secretary and the State on the structure, implementation, and oversight of the Yakima River Basin Water Conservation Program.

DATES: Thursday, May 20, 1999, 9 a.m.–4 p.m.

ADDRESSES: Bureau of Reclamation Office, 1917 Marsh Road, Yakima, Washington.

FOR FURTHER INFORMATION CONTACT: James Esget, Manager, Yakima River Basin Water Enhancement Project, P.O. Box 1749, Yakima, Washington, 98907, (509) 575–5848, extension 267.

SUPPLEMENTARY INFORMATION: The purpose of the meeting will be to review water marketing opportunities in the Yakima River basin and develop recommendations. Progress Reports will be provided on the Basin Conservation Plan and the Yakima River Basin Wetlands and Floodplain Habitat Plan.

Dated: May 4, 1999.

Alan L. Scherzinger,

Acting YRBWEP Manager.

[FR Doc. 99–11777 Filed 5–10–99; 8:45 am]

BILLING CODE 4310–94–M

DEPARTMENT OF LABOR

Office of the Secretary

Submission for OMB Review; Comment Request

May 5, 1999.

The Department of Labor (DOL) has submitted the following public information collection requests (ICRs) to the Office of Management and Budget (OMB) for review and approval in accordance with the Paperwork Reduction Act of 1995 (Pub. L. 104–13, 44 U.S.C. Chapter 35). A copy of each individual ICR, with applicable supporting documentation, may be obtained by calling the Department of Labor, Departmental Clearance Office, Ira Mills (202) 219–5096 ext. 143) or by E-Mail to Mills-Ira@dol.gov.

Comments should be sent to Office of Information and Regulatory Affairs, Attn: OMB Desk Officer for BLS, DM, ESA, ETA, MSHA, OSHA, PWBA, or VETS, Office of Management and Budget, Room 10235, Washington, DC 20503 (202) 395–7316, within 30 days from the date of this publication in the **Federal Register**.

The OMB is particularly interested in comments which:

- Evaluate whether the proposed collection of information is necessary for the proper performance of the functions of the agency, including whether the information will have practical utility;
- Evaluate the accuracy of the agency's estimate of the burden of the proposed collection of information, including the validity of the methodology and assumptions used;
- Enhance the quality, utility, and clarity of the information to be collected; and
- Minimize the burden of the collection of information on those who are to respond, including through the use of appropriate automated, electronic, mechanical, or other technological collection techniques or other forms of information technology, e.g., permitting electronic submission of response.

Agency: Employment and Training Administration.

Title: Employment Service Reporting System.

OMB Number: 1205–0240.

Frequency: Quarterly.

Affected Public: State, Local, or Tribal govt.

Number of Respondents: 54.

Total Burden Hours: 7,213 hours.

	Affected public	Respondents	Frequency	Average time per response
Form Number:				
ETA 9002A–c	States (ES)	54	Quarterly	3 hours.
Vets 200 A–B And 300	States (Vets)	54	Quarterly	2 hours 42 minutes.
Mgmt. Report	States (Vets)	1,600	Quarterly	50 minutes.
Recordkeeping:				
	States	54	As needed	12 hours.

Total Annualized capital/startup costs: $0.

Total annual costs (operating/maintaining systems or purchasing services): $0.

Description: The Employment Service Program Reporting System will provide data on State public employment service agency program activity and expenditures, for use at the Federal level by the U.S. Employment Service and the Veterans Employment and training Service in program administration and to provide reports to the President and Congress.

Ira L. Mills,

Departmental Clearance Officer.

[FR Doc. 99–11846 Filed 5–10–99; 8:45 am]

BILLING CODE 4510–30–M

DEPARTMENT OF LABOR

Labor Advisory Committee for Trade Negotiations and Trade Policy; Meeting Notice

Pursuant to the provisions of the Federal Advisory Committee Act (Pub. L. 92–463 as amended), notice is hereby given of a meeting of the Steering Subcommittee of the Labor Advisory Committee for Trade Negotiations and Trade Policy.

Date, time and place: May 20, 1999, 2 p.m., U.S. Department of Labor, N–4437 C&D, 200 Constitution Ave., NW, Washington, DC 20210.

Purpose: The meeting will include a review and discussion of current issues which influence U.S. trade policy. Potential U.S. negotiating objectives and bargaining positions in current and anticipated trade negotiations will be discussed. Pursuant to 19 U.S.C. 2155(f) it has been determined that the meeting will be concerned with matters the disclosure of which would seriously compromise the Government's negotiating objectives or bargaining positions. Accordingly, the meeting will be closed to the public.

For further information, contact: Jorge Perez-Lopez, Director, Office of International Economic Affairs, Phone: (202) 219–7597.

Signed at Washington, DC, this 5th day of May 1999.

Andrew James Samet,

Deputy Under Secretary, International Affairs.

[FR Doc. 99–11845 Filed 5–10–99; 8:45 am]

BILLING CODE 4510–28–M

DEPARTMENT OF LABOR

Employment and Training Administration

[TA–W–35,609]

Advanced Energy Industries, Inc., Fort Collins, Colorado; Notice of Termination of Investigation

Pursuant to Section 221 of the Trade Act of 1974, an investigation was initiated on February 8, 1999 in response to a worker petition which was filed on behalf of workers at Advanced Energy Industries, Inc., Fort Collins, Colorado.

The petitioner has requested that the petition be withdrawn on April 27,1999. Consequently, further investigation in this case would serve no purpose, and the investigation has been terminated.

Signed at Washington, D.C. this day of 27th, April 1999.

Grant D. Beale,

Acting Director, Office of Trade Adjustment Assistance.

[FR Doc. 99–11849 Filed 5–10–99; 8:45 am]

BILLING CODE 4510–30–M

DEPARTMENT OF LABOR

Employment and Training Administration

[TA–W–35,450]

Braeburn Alloy Steel, Incorporated Lower Burrell, Pennsylvania; Notice of Negative Determination Regarding Application for Reconsideration

By application dated April 14, 1999, the company official requested administrative reconsideration of the Department's negative determination regarding eligibility for workers and former workers of the subject firm to apply for Trade Adjustment Assistance (TAA). The denial notice applicable to workers of Braeburn Alloy Steel, Incorporated located in Lower Burrell, Pennsylvania, was signed on March 15, 1999, and published in the **Federal Register** on April 6, 1999 (64 FR 16752).

Pursuant to 29 CFR 90.18(c) reconsideration may be granted under the following circumstances:

(1) If it appears on the basis of facts not previously considered that the determination complained of was erroneous;

(2) if it appears that the determination complained of was based on a mistake in the determination of facts not previously considered; or

(3) if in the opinion of the Certifying Officer, a misinterpretation of facts or of the law justified reconsideration of the decision.

The petition, filed on behalf of workers of the subject firm in Lower Burrell, Pennsylvania, engaged in the conversion of steel was denied because the ''contributed importantly'' group eligibility requirement of Section 222(3) of the Trade Act of 1974, as amended, was not met. The ''contributed importantly'' test is generally demonstrated through a survey of the workers' firm's customers. The investigation revealed that none of the subject firm customers reported increased import purchases of articles like or directly competitive with those produced at the Braeburn Alloy Steel, Incorporated plant in Lower Burrell, Pennsylvania.

The company official asserts that the Department wrongfully interpreted the information submitted for the petition investigation. The investigation concluded that none of Braeburn's customers imported steel slab in 1997 and 1998. The company official explains that Braeburn Steel converts customer's steel such as ingots, slabs and bar into specified products as requested by the customers. The company states that Braeburn's customers in turn sell the steel product to their customers, who in turn will buy the imported steel that impacts Braeburn's business.

The Trade Act was not intended to provide TAA benefits to everyone who is in some way affected by foreign competition but only to those who experienced a decline in sales or production and employment and an increase in imports of like or directly competitive products which ''contributed importantly'' to declines in sales or production and employment. The Department limits its investigation to the impact of imports like or directly competitive with the products produced and sold by the workers' firm in this case converted steel products.

The Department stands corrected that the survey conducted for the customer's of the subject firm requested information regarding customer import purchases of converted steel, not steel slabs as inadvertently indicated in the March 15 decision document.

The company official also included news articles about some of Braeburn's customers describing the impact of imported steel rod, bar and plate, and also cites that workers for one of the subject firm customers were certified eligible for TAA. The steel shapes, regardless of source of the raw material (steel bars, slabs or ingots) sent by customers to Braeburn for conversion cannot be considered like or directly competitive with the products produced at the petitioning workers firm. The Department has reviewed TAA petitions processed and found that there were no TAA workers group certifications issued for the specific customer location cited by the company official.

Conclusion

After review of the application and investigative findings, I conclude that there has been no error or misinterpretation of the law or of the facts which would justify reconsideration of the Department of Labor's prior decisions. Accordingly, the application is denied.

Signed at Washington, D.C. this 28th day of April 1999.

Grant D. Beale,

Acting Director, Office of Trade Adjustment Assistance.

[FR Doc. 99–11859 Filed 5–10–99; 8:45 am]

BILLING CODE 4510–30–M

DEPARTMENT OF LABOR

Employment and Training Administration

Investigations Regarding Certifications of Eligibility to Apply for Worker Adjustment Assistance

Petitions have been filed with the Secretary of Labor under Section 221(a) of the Trade Act of 1974 (''the Act'') and are identified in the Appendix to this notice. Upon receipt of these petitions, the Acting Director of the Office of Trade Adjustment Assistance, Employment and Training Administration, has instituted investigations pursuant to Section 221(a) of the Act.

The purpose of each of the investigations is to determine whether the workers are eligible to apply for adjustment assistance under Title II, Chapter 2, of the Act. The investigations will further relate, as appropriate, to the determination of the date on which total or partial separations began or threatened to begin and the subdivision of the firm involved.

The petitioners or any other persons showing a substantial interest in the subject matter of the investigations may request a public hearing, provided such request is filed in writing with the

Acting Director, Office of Trade Adjustment Assistance, as the address shown below, not later than May 24, 1999.

Interested persons are invited to submit written comments regarding the subject matter of the investigations to the Acting Director, Office of Trade Adjustment Assistance, at the address shown below, not later than May 24, 1999.

The petitioners filed in this case are available for inspection at the Office of the Acting Director, Office of Trade Adjustment Assistance, Employment and Training Administration, U.S. Department of Labor, 200 Constitution Avenue, NW, Washington, DC 20210.

Signed at Washington, D.C. this 19th day of April, 1999.

Grant D. Beale,

Acting Director, Office of Trade Adjustment Assistance.

APPENDIX

[Petitions Instituted on 04/19/1999]

TA–W	Subject firm (petitioners)	Location	Date of petition	Product(s)
36,051	Breed Tech/Mortion Bendix (Comp)	Maryville, TN	03/30/1999	Airbag Cushions.
36,052	R and D Manufacturing (Comp)	Haynesville, LA	03/08/1999	KSR Gloves.
36,053	Cable Systems Int'l (Wrks)	Phoenix, AZ	04/07/1999	Cables and Cords.
36,054	N.V.N. (Wrks)	Clifton, NJ	04/01/1999	Coats.
36,055	Russell Corp (Wrks)	Habersham, GA	03/01/1999	Yarn.
36,056	Cyprus Tohono Corp (Wrks)	Casa Grande, AZ	04/01/1999	Copper Cathodes.
36,057	Clark-Schwebel Corp (Comp)	Cleveland, GA	03/29/1999	Fiberglass Fabric.
36,058	Jaton Corp (Comp)	Militas, CA	03/30/1999	VGA Cards and Modems.
36,059	Kaiser Aluminum Castings (GMPPW)	Canton, OH	03/31/1999	Aluminum Castings.
36,060	Thomas C. Wilson (Wrks)	Odessa, TX	03/30/1999	Tube Cleaners, Expanders.
36,061	D.B. Riley Corp (Wrks)	Erie, PA	03/24/1999	Boilers—Panels.
36,062	Stonecutter Textiles, Inc (Wrks)	Spindale, NC	03/29/1999	Greige and Finished Fabrics.
36,063	Cobre Mining Co (Wrks)	Hanover, NM	04/01/1999	Copper Mine.
36,064	Equitable Bag Co (PACE)	Florence, KY	03/31/1999	Plastic Bags.
36,065	Funk Manufacturing, Inc (Wrks)	Coffeyville, KS	03/31/1999	Gears.
36,066	Rearch, Inc. (Comp)	Klamath Falls, OR	03/31/1999	Lumber.
36,067	Original Bradford Soap (Wrks)	West Warwick, RI	04/05/1999	Bar Soap.
36,068	BTR Sealing Systems (Wrks)	West Unity, OH	03/30/1999	Rubber Seals.
36,069	Thyssen Mining/Betty Coal (Wrks)	Coeburn, VA	03/19/1999	Metallurgical Coal.
36,070	Kaufman Footwear Corp (Wrks)	Batavia, NY	03/03/1999	Leather and Nylon Winter Boots.
36,071	Bordo Knitting Mills (Comp)	Union City, NJ	03/29/1999	Sweaters.
36,072	Excel IV Div/Miss Brenner (UNITE)	Clifton, NJ	03/29/1999	Printing Screens.
36,073	Mann Manufacturing Co (Wrks)	Walnut Grove, MS	04/08/1999	Gloves.
36,074	Karen Anne Mfg, Inc (Wrks)	Fall River, MA	04/07/1999	Soft Nylon Luggage.
36,075	Universal Welding, Inc (IABS)	Export, PA	04/05/1999	Steel Processing Equipment.
36,076	Hardinge, Inc (Wrks)	Elmira, NY	03/10/1999	Lathes and Machinery.
36,077	Gray Bee Lime (Wrks)	Pleasant Gap, PA	04/01/1999	Lime Products.
36,078	International Paper (Comp)	Mobile, AL	03/30/1999	Paper.
36,079	H.M.C. Fashions Coat, Inc (UNITE)	Brooklyn, NY	03/30/1999	Ladies' Coats and Jackets.
36,080	Mead School and Office (PACE)	Saint Joseph, MO	03/25/1999	Sales of Nylon School Notebooks.
36,081	Key Energy Drilling, Inc (Comp)	Levelland, TX	03/19/1999	Oil Drilling.
36,082	Quality Oil Service (Comp)	Jal, NM	03/29/1999	Trucking Service.
36,083	Schneider Drilling Corp (Wrks)	Tyler, TX	03/25/1999	Oil and Gas Drilling.
36,084	Grant Geophysical Corp (Comp)	Houston, TX	03/29/1999	Seismograph Services.
36,085	D.A.B. Oil Service, Inc (Comp)	Abilene, TX	03/19/1999	Crude Oil.
36,086	Maxus Energy Corp/Midgard (Comp)	Dallas, TX	03/31/1999	Oil and Gas.
36.087	National Oilwell (Wrks)	Williston, ND	03/26/1999	Oil Drilling.
36,088	Petroleum Experience, Inc. (Comp)	Williston, ND	03/29/1999	Oil Well Services.
36,089	Burlington Resources (Wrks)	Midland, TX	03/30/1999	Oil and Gas.
36,090	Cliff's Drilling Co (Wrks)	Lafayette, LA	03/22/1999	Oil and Gas Drilling.

[FR Doc. 99–11847 Filed 5–11–99; 8:45 am]

BILLING CODE 4510–30–M

DEPARTMENT OF LABOR

Employment and Training Administration

[TA–W–35,152]

Buster Brown Apparel, Inc. Chilhowie, Virginia; Amended Certification Regarding Eligibility to Apply for Worker Adjustment Assistance

In accordance with Section 223 of the Trade Act of 1974 (19 USC 2273) the Department of Labor issued a Notice of Certification Regarding Eligibility to Apply for Worker Adjustment Assistance on January 19, 1999, applicable to workers of Buster Brown Apparel, Inc., Chattanooga, Tennessee. The notice was published in the **Federal Register** on February 25, 1999 (64 FR 9354).

At the request of the State agency, the Department reviewed the certification for workers of the subject firm. The workers produce children's apparel. New findings show that a certification covering the workers at Chattanooga, Tennessee, TA–W–32,260 was issued on April 24, 1996 and expired April 24,

1998. That certification was also amended on July 1, 1996 to cover the workers at Chilhowie, Virginia. To avoid an overlap in worker group coverage, the certification is being amended to change the impact date from October 19, 1997 to April 25, 1998, for Buster Brown Apparel, Inc., Chilhowie, Virginia.

The amended notice applicable to TA–W–35,152 is hereby issued as follows:

All workers of Buster Brown Apparel, Inc., Chilhowie, Virginia who became totally or partially separated from employment on or after April 25, 1998 through January 19, 2001 are eligible to apply for adjustment assistance under Section 223 of the Trade Act of 1974.

Signed at Washington, D.C. this 29th day of April, 1999.

Grant D. Beale,

Acting Director, Office of Trade Adjustment Assistance.

[FR Doc. 99–11850 Filed 5–10–99; 8:45 am]

BILLING CODE 4510–30–M

DEPARTMENT OF LABOR

Employment and Training Administration

[TA–W–35,561]

Fashionland, Inc., Jersey City, New Jersey; Notice of Termination of Investigation

Pursuant to Section 221 of the Trade Act of 1974, an investigation was initiated on February 1, 1999, in response to a petition filed on behalf of workers Fashionland, Inc., Jersey City, New Jersey.

Repeated attempts to contact officials of the subject firm proved unsuccessful. Consequently, further investigation in this case would serve no purpose; and the investigation has been terminated.

Signed in Washington, DC this 28th day of April, 1999.

Grant D. Beale,

Acting Director, Office of Trade Adjustment Assistance.

[FR Doc. 99–11848 Filed 5–10–99; 8:45 am]

BILLING CODE 4510–30–M

DEPARTMENT OF LABOR

Employment and Training Administration

[TA–W–35,564]

Guilford Mills, Herkimer, New York; Amended Certification Regarding Eligibility to Apply for Worker Adjustment Assistance

In accordance with section 223 of the Trade Act of 1974 (19 U.S.C. 2273) the Department of Labor issued a Certification of Eligibility to Apply for Worker Adjustment Assistance on February 19, 1999, applicable to workers of Guilford Mills, Inc., Sheet Department, Herkimer, New York. The notice will soon be published in the **Federal Register**.

At the request of petitioners, the Department reviewed the certification for workers of the subject firm. Workers of Guilford Mills in Herkimer, New York produce bedding and window treatments. The original certification limited coverage to workers in the subject firm's sheet department. New information provided by the company show that worker separations have occurred in the window treatment department. The workers are interchangeable by product line at the Herkimer, New York plant.

The intent of the Department's certification is to provide coverage to all workers of the subject firm adversely affected by increased imports. Accordingly, the Department is amending the certification to expand coverage to all workers of Guilford Mills, Inc. in Herkimer, New York.

The amended notice applicable to TA–W–35,564 is hereby issued as follows:

''All workers of Guilford Mills, Inc., Herkimer, New York, who became totally or partially separated from employment on or after December 14, 1997 through February 19, 2001, are eligible to apply for adjustment assistance under section 223 of the Trade Act of 1974.''

Signed at Washington, DC, this 22nd day of April 1999.

Grant D. Beale,

Acting Director, Office of Trade Adjustment Assistance.

[FR Doc. 99–11860 Filed 5–10–99; 8:45 am]

BILLING CODE 4510–30–M

DEPARTMENT OF LABOR

Employment and Training Administration

[TA–W–34, 736 and TA–W–34, 736A]

Lehigh Portland Cement Buffington Station Gary, Indiana; Specialty Products Division Allentown, Pennsylvania; Amended Certification Regarding Eligibility to Apply for Worker Adjustment Assistance

In accordance with Section 223 of the Trade Act of 1974 (19 USC 2273) the Department of Labor issued a Notice of Certification Regarding Eligibility to Apply for Worker Adjustment Assistance on August 7, 1998, applicable to workers of Lehigh Portland Cement, Buffington Station, Gary, Indiana. The notice was published in the **Federal Register** on August 28, 1998 (63 FR 46073).

At the request of the company, the Department reviewed the certification for workers of the subject firm. New information shows that worker separations occurred at the Specialty Products Division, Allentown, Pennsylvania location of Lehigh Portland Cement. The Allentown, Pennsylvania workers provided administrative services to support the production of calcium aluminate cement at Lehigh's manufacturing facility in Buffington Station, Gary, Indiana.

Based on these findings, the Department is amending the certification to include workers of Lehigh Portland Cement, Specialty Products Division, Allentown, Pennsylvania.

The intent of the Department's certification is to include all workers of Lehigh Portland Cement who were adversely affected by increased imports of calcium aluminate cement.

The amended notice applicable to TA–W–34, 736 is hereby issued as follows:

''All workers of Lehigh Portland Cement, Buffington Station, Gary, Indiana (TA–W–34, 736) and the Specialty Products Division, Allentown, Pennsylvania (TA–W–34, 736A) who became totally or partially separated from employment on or after June 25, 1997 through August 7, 2000 are eligible to apply for adjustment assistance under Section 223 of the Trade Act of 1974.''

Signed at Washington, D.C. this 29th day of April, 1999.

Grant D. Beale,

Acting Director, Office of Trade Adjustment Assistance.

[FR Doc. 99–11854 Filed 5–10–99; 8:45 am]

BILLING CODE 4510–30–M

DEPARTMENT OF LABOR

Employment and Training Administration

[TA–W–35, 991]

Miller Brothers Industries, Inc., Corsicana, Texas; Amended Certification Regarding Eligibility To Apply for Worker Adjustment Assistance

In accordance with Section 223 of the Trade Act of 1974 (19 USC 2273) the Department of Labor issued a Certification of Eligibility to Apply for Worker Adjustment Assistance on April 14, 1999, applicable to workers of Miller Brothers Industries, Inc., Corsicana, Texas engaged in the production of constructed caps. The notice will be published soon in the **Federal Register**.

At the request of the company, the Department reviewed the certification for workers of the subject firm. New findings shows that the Department incorrectly limited the certification to ''all workers engaged in employment related to the production of constructed caps.'' The intent of the Department's certification is to include ''all workers'' of Miller Brothers Industries, Inc, Corsicana, Texas adversely affected by increased imports.

The Department is amending the certification determination to correctly identify the worker group to read ''all workers.''

The amended notice applicable to TA–W–35,991 is hereby issued as follows:

All workers at Miller Brothers Industries, Inc., Corsicana, Texas who became totally or partially separated from employment on after March 23, 1998 through April 14, 2001 are eligible to apply for adjustment assistance under Section 223 of the Trade Act of 1974.

Signed at Washington, DC this 29th day of April, 1999.

Grant D. Beale,

Acting Director, Office of Trade Adjustment Assistance.

[FR Doc. 99–11851 Filed 5–10–99; 8:45 am]

BILLING CODE 4510–30–M

DEPARTMENT OF LABOR

Emnployment and Training Administration

[TA–W–34, 896]

Paxar Woven Label Paterson, NJ; Notice of Revised Determination on Reconsideration

On March 8, 1999, the Department issued an Affirmative Determination Regarding Application on Reconsideration applicable to workers and former workers of the subject firm. The notice was published in the **Federal Register** on March 16, 1999 (64 FR 13039).

The Department initially denied TAA to workers of Paxar Woven Label, Paterson, New Jersey, because the ''contributed importantly'' group eligibility requirement of Section 222(3) of the Trade Act of 1974, as amended, was not met.

On reconsideration, the Department obtained additional information from the company concerning imports of woven labels such as those manufactured at the subject facility. The company provided information which reflected an increased reliance on imports of woven labels in recent years which contributed to the decline in production and closure of the subject facility.

Conclusion

After careful review of the additional facts obtained on reconsideration, I conclude that increased imports of articles like or directly competitive with woven labels contributed importantly to the declines in sales or production and to the total or partial separation of workers of Paxar Woven Label, Paterson, New Jersey. In accordance with the provisions of the Act, I make the following certification:

All workers of Paxar Woven Label, Paterson, New Jersey who became totally or partially separated from employment on or after April 3, 1998 are eligible to apply for adjustment assistance under Section 223 of the Trade Act of 1974;

Signed in Washington, D.C. this 27th day of April 1999.

Grant D. Beale,

Acting Director, Office of Trade Adjustment Assistance.

[FR Doc. 99–11857 Filed 5–10–99; 8:45 am]

BILLING CODE 4510–30–M

DEPARTMENT OF LABOR

Employment and Training Administration

[TA–W–35,156D and TA–W–35,156C]

Pluma, Inc.; Rocky Mount, VA; Alatavista, VA; Amended Notice of Revised Determination on Reopening

In accordance with Section 223 of the Trade Act of 1974 (19 U.S.C. 2273) the Department of Labor issued a Notice of Revised Determination on Reopening on February 9, 1999, applicable to workers of Pluma, Inc., Rocky Mount, Virginia. The notice was published in the **Federal Register** on February 18, 1999 (64 FR 8129).

At the request of the company, the Department reviewed the revised determination for workers of the subject firm. New information provided by the company shows that worker separations have occurred at Pluma's Altavista, Virginia facility. The workers are engaged in employment related to the production of knitted activewear for ladies', men and children. Accordingly, the Department is amending the certification to cover workers of Pluma, Inc., Altavista, Virginia.

The intent of the Department's certification is to include all workers of Pluma, Inc. adversely affected by increased imports.

The amended notice applicable to TA–W–35,156D is hereby issued as follows:

All workers of Pluma, Inc., Rocky Mount, Virginia (TA–W–35,156D) and Altavista, Virginia (TA–W–35,156C) who became totally or partially separated from employment on or after October 15, 1997 through February 9, 2001 are eligible to apply for adjustment assistance under Section 223 of the Trade Act of 1974.

Signed at Washington, D.C. this 29th day of April, 1999.

Grant D. Beale,

Acting Director, Office of Trade Adjustment Assistance.

[FR Doc. 99–11853 Filed 5–10–99; 8:45 am]

BILLING CODE 4510–30–M

DEPARTMENT OF LABOR

Employment and Training Administration

[TA–W–35,612 and TA–W–35,612B]

Salant Corporation; Obion-Denton Facilities; Obion, TN; Carrizo Springs, TX; Amended Certification Regarding Eligibility To Apply for Worker Adjustment Assistance

In accordance with Section 223 of the Trade Act of 1974 (19 U.S.C. 2273) the Department of Labor issued a Notice of Certification Regarding Eligibility To Apply for Worker Adjustment Assistance on March 15, 1999, applicable to workers of Salant Corporation, Obion-Denton located in Obion, Tennessee and Union City, Tennessee. The notice was published in the **Federal Register** on April 6, 1999 (64 FR 16754).

At the request of the company, the Department reviewed the certification for workers of the subject firm. The workers are engaged in the production of children's sleepwear and provide warehouse and distribution services.

New information shows that all workers will be separated at Salant Corporation's Carrizo Springs, Texas location when it closes permanently May 21, 1999. The workers provide distribution services for Salant Corporation's production facility in Obion, Tennessee.

Accordingly, the Department is amending the certification to cover the workers of Salant Corporation, Obion-Denton, Carrizo Springs, Texas.

The intent of the Department's certification is to include all workers of Salant Corporation, Obion-Denton who were adversely affected by increased imports.

The amended notice applicable to TA–W–35,612 is hereby issued as follows:

All workers of Salant Corporation, Obion-Denton, Obion, Tennessee (TA–W–35,612) and Carrizo Springs, Texas (TA–W–35,612B) who became totally or partially separated from employment on or after January 25, 1998 through March 15, 2001 are eligible to apply for adjustment assistance under Section 223 of the Trade Act of 1974.

Signed at Washington, D.C. this 26th day of April, 1999.

Grant D. Beale,

Acting Director, Office of Trade Adjustment Assistance.

[FR Doc. 99–11858 Filed 5–10–99; 8:45 am]

BILLING CODE 4510–30–M

DEPARTMENT OF LABOR

Employment and Training Administration

Notice of Determinations Regarding Eligibility to Apply for Worker Adjustment Assistance and NAFTA Transitional Adjustment Assistance

In accordance with Section 223 of the Trade Act of 1974, as amended, the Department of Labor herein presents summaries of determinations regarding eligibility to apply for trade adjustment assistance for workers (TA–W) issued during the period of April, 1999.

In order for an affirmative determination to be made and a certification of eligibility to apply for worker adjustment assistance to be issued, each of the group eligibility requirements of Section 222 of the Act must be met.

(2) That a significant number or proportion of the workers in the workers' firm, or an appropriate subdivision thereof, have become totally or partially separated,

(2) That sales or production, or both, of the firm or subdivision have decreased absolutely, and

(3) That increases of imports of articles like or directly competitive with articles produced by the firm or appropriate subdivision have contributed importantly to the separations, or threat thereof, and to the absolute decline in sales or production.

Negative Determinations for Worker Adjustment Assistance

In each of the following cases the investigation revealed that criterion (3) has not been met. A survey of customers indicated that increased imports did not contribute importantly to worker separations at the firm.

TA–W–35,530; Weinman Pump and Supply Co., Pittsburgh, PA
TA–W–35,606; P and M Cedar Products, Pioneer, CA
TA–W–35,503 & A; Recmix of Pennsylvania, Inc., Canonsburg, PA & Sarver, PA
TA–W–35,563; Cutout's, Inc., Fall River, MA
TA–W–35,583; Branch Cheese, Saputo Cheese USA, Branch, WI
TA–W–35,727; Martin Marietta Magnesia Specialities, Inc, Manistee, MI
TA–W–35,604; Universal Stainless & Alloy Products, Inc., Titusville, PA
TA–W–35,648; Crown Cork and Seal Co., Inc., Walla Walla, WA
TA–W–35,710; Forrest Yarns, Inc., Newport, ME
TA–W–35,721; Newark Paperboard, Inc., Woodburn, OR
TA–W–35,865; NF & M International, Manaca, PA
TA–W–35,686; A.C. Railroad Service Co., McKees Rocks, PA
TA–W–35,616; Erie Forge and Steel, Inc., Erie, PA

In the following cases, the investigation revealed that the criteria for eligibility have not been met for the reasons specified.

TA–W–35,798; Ryerson Tull, Inc., Thypin Steel Co., Easton, PA
TA–W–35,823; Land Management Group, Houston, TX
TA–W–35,239; Bull HN Worldwide Information Systems, Inc., Phoenix, AZ
TA–W–35,640; Kitty Hawk International (Formerly American International Airways), Oscoda, MI
TA–W–35,637; Stage II Apparel Corp., New York, NY
TA–W–35,681; Apex Machine Shop, Williston, ND
TA–W–35,671; Snap-On-Tools, Ottawa, IL
TA–W–35,643; Peak Oilfield Service Co., Anchorage, AK

The workers firm does not produce an article as required for certification under Section 222 of the Trade Act of 1974.

TA–W–35,904; Carhartt, Inc., McKenzie, TN
TA–W–35,835; Eaton Corp., Actuator & Sensor Div., Hamilton, IN
TA–W–35,925; Ansell Protective Products, Tarboro, NC
TA–W–35,930; Mueller Industries, Inc., Wynne, AR
TA–W–35,871; Parnell's peanuts Div. Of Morven Partners, Gorman, TX
TA–W–35,692; Rock-Tenn Co. Laminated Paperboard Products Div., Otsego, MI
TA–W–35,882; Simula, Inc., Artcraft Industries Corp., Milwaukee, WI
TA–W–35,884; Siebe Appliance Controls, Cooking and Refrigeration Div., Winterset, IA
TA–W–35,570; National Standard Co, Corbin, KY
TA–W–35,433; Sumitomo Machinery Corp of America, Chesapeake, VA and Operating at the Following Locations: A; Teterboro, NJ, B; Corona, CA, C; Glendale Heights, IL, D; Ft. Washington, PA
TA–W–35,936; Senior Flexonics, OSI Div., Allison Park, PA
TA–W–35,539; Wendt Corp., Tonawanda, NY

Increased imports did not contribute importantly to worker separations at the firm.

TA–W–35,276 & A; Dawson Production Services, Midland, TX and Carthage, TX

The investigation revealed that citeria (2) and criteria (3) have not been met. Sales or production did not decline during the relevant period as required for certification. Increases of imports of articles like or directly competitive with articles produced by the firm or appropriate subdivision have not contributed importantly to the separations or threat thereof, and the absolute decline in sales or production.

TA–W–35,656; Mead Corp., Mead Paper Div., Chillicothe, OH

The investigation revealed that criteria (2) has not been met. Sales or production did not decline during the relevant period as required for certification.

6*TA–W–35,799; Louisiana Pacific Corp., Rogue River Veneer Plant, Rogue River, OR*

The investigation revealed that criteria (1) and criteria (2) have not been met. A significant number or proportion of the workers did not become totally or partially separated from employment as required for certification. Sales or production did not decline during the relevant period as required for certification.

Affirmative Determinations for Worker Adjustment Assistance

The following certifications have been issued; the date following the company

name and location of each determination references the impact date for all workers of such determination.

TA–W–35,452; C.P. Chemicals, Inc., Sewaren, NJ: December 21, 1997
TA–W–35,282; Compaq Computer Corp., Houston, TX: November 11, 1997
TA–W–35,501; Stitches, Inc., El Paso, TX: February 27, 1998
TA–W–35,581; OshKosh B'Gosh, Liberty, KY: February 7, 1999
TA–W–35,555; Lawrence Electronics, Inc., Tulsa, OK: January 2, 1998
TA–W–35,552; Mountain West Colorado Aggregate (MWCA), Kamiah Plant, Kamiah, ID: January 8, 1998
TA–W–35,537; Porcelanite, Inc., Lexington, NC: January 13, 1998
TA–W–35,445; International Paper, Lock Haven, PA: December 15, 1997
TA–W–35,451; The Pillsbury Co., Haagen-Dasz Plant, Woodbridge, NJ: December 21, 1997
TA–W–35,294, A & B; Altura Energy Ltd., Houston, TX and Operations at Various Locations in the State of TX and NM: November 10, 1997
TA–W–35,398; Koppel Steel Corp., Koppel, PA: December 10, 1997
TA–W–35,659; Buster Brown Apparel, Inc., Chattanooga, TX: January 28, 1998
TA–W–35,655; JB Sportswear, Union, MS: February 2, 1998
TA–W–35,428; Cranston Print Works, Co., Webster, ME: December 7, 1997
TA–W–35,327; Fashions International, Scranton, PA: November 24, 1997
TA–W–35,542 & A; Wilkens Industries, Inc., Athens, GA and Jefferson, GA: February 15, 1998
TA–W–35,652 & A; Dudley Kebow, Inc., Oceanside, CA and Albuquerque, NM: January 28, 1998
TA–W–35,569; Missouri Valley Perforating, Inc., Kenmare, ND: January 17, 1998
TA–W–35,595; Oxford of Vidalia, Sewing Plant, Vidalia, GA: January 15, 1998
TA–W–35,475; Watseka L.F., Inc., Watseka, IL: December 27, 1997
TA–W–35,691 A & B; Star Tool, Hobbs, NM, Odessa, TX and Brownfield, TX: February 1, 1998
TA–W–35,317; Tycom Corp., Minnesota Div., Arden Hills, MN: November 25, 1997
TA–W–35,382; Coach Leatherware Corp., Carlstadt, NJ: November 30, 1997
TA–W–35,378; Biltmore Textile Co., Inc., New York NY: December 2, 1997
TA–W–35,274; W.L. Gore & Associates, Inc., Electronic Products Div., Phoenix, AZ: November 16, 1997
TA–W–35,422; Magura USA Corp., Olney, IL: December 10, 1997
TA–W–35,404; AM Petroleum, Inc., Upton, WY: December 9, 1997
TA–W–35,466; American Energy Services, Midland, TX: December 21, 1997
TA–W–35,687; Ensign Oil and Gas, Inc., Denver, CO: January 25, 1998
TA–W–35,213; Lady Carol Dresses, A Subsidiary of Duryea Industries, Duryea, PA: October 23, 1997
TA–W–35,416; J.S. Lamy Manufacturing Co., Sedalia, MO: November 30, 1997
TA–W–35,477; Southern Container Corp., Pre-Print Dept, Dayton, NJ: December 18, 1997
TA–W–35,215; Irving Tanning Co., Hartland, ME: November 3, 1997
TA–W–35,836; Gloria Lingerie, Long Island City, NY: February 14, 1998
TA–W–35,873; Brand-S Corp., Superior Hardwoods Div., Corvallis, OR: March 4, 1998
TA–W–35,711; Sperry-Sun Drilling Services, Headquartered in Houston, TX & Operating at Other Locations in The Following States: A; AK, B; CA, C; LA, D; MI, E; OK, F; TX G; WY: February 17, 1998
TA–W–35,711AA; Baroid Drilling Fluids, Headquartered in Houston, TX & Operating at Other Locations in The Following States: AB; AK, AC; AR, AD; AZ, AE; CA, AF; CO, AG; GA, AH; IA, AI; KS, AJ; LA, AK; MO, AL; NM, AM; NV, AN; OH, AO, OK, AP; PA, AO; TX, AR; WY: February 17, 1998
TA–W–35,711BA; Security DBS, Headquartered in Dallas, TX & Operating at Other Locations in The Following States; BB; CO, BC; LA, BD; OK, BE; TX: February 17, 1998
TA–W–35,950; Komatsu America, Inc., Hillsboro, OR: March 12, 1998
TA–W–35,509; Key Energy Service Inc., Mid-Continent Div. A/k/a Well Tech, Inc., El Reno, OK & Operating In The Following States; A; OK (Except El Reno), B; KS, C; TX, D; AR: December 26, 1997
TA–W–35,443; Katzenberg Brothers, Inc., Baltimore, MD: December 9, 1997
TA–W–35,991; Miller Brothers Industries, Inc., Corsicana, TX: March 23, 1998
TA–W–35,841; North American Knitting Co., Mansfield, OH: March 3, 1998
TA–W–35,880; Henkel Corp., Chemicals Group, Los Ageles, CA: March 10, 1998
TA–W–35,916; Mitel, Inc., Ogdensburg, NY: March 8, 1998
TA–W–35,701; Ansell Edmont, d/b/a Ansell Protective Products, Haynesville, LA: April 13, 1998
TA–W–35,743; Advance Consultants Corp., Midland, TX: February 11, 1998
TA–W–35,646; The Stroh Brewery Co., Tampa, FL: January 12, 1998
TA–W–35,905; Hughes-JVC Technology Corp., Carlsbad, CA: March 5, 1998
TA–W–35,844; Seco Products Corp., Therma-Systems Div., South Plainfield, NJ: February 26, 1998
TA–W–35,802; Fleming-Potter Co., Inc., Peoria, IL: February 24, 1998
TA–W–35,843; Avery Dennison Office Products, Rochelle, IL: February 19, 1998
TA–W–35,818; Gesell's Pump Sales & Service, Inc., Whittington, IL: February 23, 1998
TA–W–35,845; Horace Small Manufacturing Co., Nashville, TN: February 26, 1998
TA–W–35,892; Martin Copeland Eyeware Corp., Bristol, RI: March 8, 1998
TA–W–35,487; Baker Atlas, Williston, ND & Operating Throughout The State of ND: January 1, 1998
TA–W–35,883; Jones Drilling Headquartered in Odessa, TX & Operating in A; TX and B; OK: March 4, 1998
TA–W–35,704; Johnson & Johnson Medical, Inc., Arlington, TX: April 19, 1999
TA–W–35,615; Shape Global, Sanford, ME: January 28, 1998
TA–W–35,729; Nabors Alaska Drilling, Inc., Anchorage, AK: February 18, 1998
TA–W–35,578; Rockwell Automation Power Systems, Mishawaka, IN: January 8, 1998
TA–W–35,716; KLH Industries, Inc., Headquartered in Clinton, MS & Operating at Various Locations in MS: February 4, 1998
TA–W–35,553; Mitchell's Oilfield Service, Inc., Sidney, MT: January 14, 1998
TA–W–35,523; Greenwood Mills Lindale Manufacturing, Lindale, GA: January 12, 1998
TA–W–35,950; Key Energy Drilling, Inc., Permain Basin Div., Headquartered in Levelland, TX & Operating at Various Locations in The State of A; TX and B; NM: January 11, 1998
TA–W–35,951; Plymouth Stitching, Ashland, NH: March 15, 1998
TA–W–35,922; Odessa Packer Service, Inc., Odessa, TX: March 2, 1998

Also, pursuant to Title V of the North American Free Trade Agreement Implementation Act (P.L. 103–182) concerning transitional adjustment assistance hereinafter called (NAFTA–TAA) and in accordance with Section 250(a), Subchapter D, Chapter 2, Title II, of the Trade Act as amended, the Department of Labor presents

summaries of determinations regarding eligibility to apply for NAFTA–TAA issued during the month of April, 1999.

In order for an affirmative determination to be made and a certification of eligibility to apply for NAFTA–TAA the following group eligibility requirements of Section 250 of the Trade Act must be met:

(1) That a significant number or proportion of the workers in the workers' firm, or an appropriate subdivision thereof, (including workers in any agricultural firm or appropriate subdivision thereof) have become totally or partially separated from employment and either—

(2) That sales or production, or both, of such firm or subdivision have decreased absolutely,

(3) That imports from Mexico or Canada of articles like or directly competitive with articles produced by such firm or subdivision have increased, and that the increases in imports contributed importantly to such workers' separations or threat of separation and to the decline in sales or production of such firm or subdivision; or

(4) That there has been a shift in production by such workers' firm or subdivision to Mexico or Canada of articles like or directly competitive with articles which are produced by the firm or subdivision.

Negative Determinations NAFTA–TAA

In each of the following cases the investigation revealed that criteria (3) and (4) were not met. Imports from Canada or Mexico did not contribute importantly to workers' separations. There was no shift in production from the subject firm to Canada or Mexico during the relevant period.

NAFTA–TAA–02996; Active Products Corp., Marion, IN
NAFTA–TAA–03018; Heinz Frozen Food Co., Pocatello-Weight Watchers Div., Pocatello, ID
NAFTA–TAA–03033; Morrow Snowboards, Inc., Salem, OR
NAFTA–TAA–02984; North Power Arcade, NY
NAFTA–TAA–02861; Horowitz/Rae Book Manufacturers, Inc., Fairfield, NJ
NAFTA–TAA–03030; Key Energy Services, Inc., Rocky Mountain Div., Casper, WY
NAFTA–TAA–02888; Branch Cheese/ Saputo Cheese USA, Branch, WI
NAFTA–TAA–02945; Newark Paperboard, Inc., Woodburn, OR
NAFTA–TAA–02981; Advance Consultants Corp., Midland, TX
NAFTA–TAA–02976; Simula, Inc., Artcraft Industries Corp., Milwaukee, WI
NAFTA–TAA–02902; Parkdale Mills, Inc., Mill #6. Thomasville, NC
NAFTA–TAA–02962; Easton Corp., Actuator and Sensor Div., Hamilton, IN
NAFTA–TAA–02952; Carhartt, Inc., McKenzie, TN
NAFTA–TAA–02943; Castalia Apparel, Castalia, NC
NAFTA–TAA–02917; Allvac Latrobe Plant, AN Allegheny Teledyne Co., Latrobe, PA
NAFTA–TAA–02900 & A; Baker Hughes Inteq, Casper, WY & Cody, WY
NAFTA–TAA–02956; Hudson ICS, San Leandro, CA
NAFTA–TAA–02944; Shasta, Inc., Monaca, PA
NAFTA–TAA–02970; Ametek, Lamb Electric Div., Cambridge, OH
NAFTA–TAA–02877; Tektronix, Inc., Bend, OR
NAFTA–TAA–02986; Spartan Mills, Startex Div., Startex, SC
NAFTA–TAA–02992; Worldclass Processing, Inc., Ambridge, PA
NAFTA–TAA–02928; Autotron, Inc., Autotron Group, Danville, IL
NAFTA–TAA–02999; Senior Flexonics, Inc., OSI Div., Allison Park, PA
NAFTA–TAA–02954; Lucia, Inc., Elkin Plant, Elkin, NC
NAFTA–TAA–02881; Jasper Textiles, Inc. a/k/a Outer Banks, Jacksonville, NC
NAFTA–TAA–02930; Baker Oil Tools, Olney IL
NAFTA–TAA–02964; The West Bend Co., West Bend, WI
NAFTA–TAA–02772; International Paper Co., Printing Papers Div., Ticonderoga, NY
NAFTA–TAA–02843; Boston Precision Parts Co., Inc., Hyde Park, MA
NAFTA–TAA–02828; Illinois Glove Co., Effingham, IL
NAFTA–TAA–01975; Illinois Glove Co., Beardston, IL
NAFTA–TAA–03029; 3M West Deptford Plant, Electrical Products Div., Thorofare, NJ
NAFTA–TAA–0-3022; Schlumberg Oilfield Services, Mt Carmel, IL
NAFTA–TAA–02963; Dean Pickle & Specialty Products Co., Inc., Croswell Plant, Croswell, MI
NAFTA–TAA–02897; Connor Corp., Indianapolis, Inc.

The investigation revealed that the criteria for eligibility have not been met for the reasons specified.

NAFTA–TAA–02950; Ryerson Tull, Inc., Thypin Steel Co., Easton, PA
NAFTA–TAA–02926; Snap-On-Tools, Ottawa, IL
NAFTA–TAA–03078; Columbia Sportswear Co., Quality Audit Department At The Distribution Center, Portland, OR
NAFTA–TAA–03010; Romarco Minerals, Inc., Reno, NV
NAFTA–TAA–03007; Impact Equipment Company, Elko, NV
NAFTA–TAA–03006; High Desert Mineral Resources, Inc., Elko, NV

The investigation revealed that the workers of the subject firm did not produce an article within the meaning of Section 250(a) of the Trade Act, as amended.

NAFTA–TAA–02965; Bard Access Systems, Salt Lake City, UT

The investigation revealed that criteria (1) has not been met. A significant number or proportion of the workers' firm or an appropriate subdivision (including workers in any agricultural firm or appropriate subdivision thereof) have not become totally or partially separated from employment as required for certification.

Affirmative Determinations *NAFTA–TAA*

NAFTA–TAA–02988; Columbia Controls and Panels, Portland, OR: March 9, 1998
NAFTA–TAA–02844 & A, B, D, D, E; Pluma, Inc., Rock Mount, VA, Altavista, VA, Martinsville, VA, Chatham, VA, Eden, NC and Commerce, CA: January 8, 1998
NAFTA–TAA–02788; Schneider Mills, Inc., Alexander Mills Plant, Forest City, NC; December 4, 1997
NAFTA–TAA–02974; Tultex, Mayodan, NC: March 2, 1998
NAFTA–TAA–02987; Fashion Enterprises, El Paso, TX: February 22, 1998
NAFTA–TAA–03109; Bonnell Mfg., Co., Inc., Mt. Laurel, NJ: March 8, 1998
NAFTA–TAA–02972; Foremost Drill Systems, Reno, NV: February 23, 1998
NAFTA–TAA–02993; The Well Lamont Corp., McGehee, AR: March 9, 1998
NAFTA–TAA–02948; Ansell Edmont, d/ b/a Ansell Protective Products, Haynesville, LA: January 26, 1998
NAFTA–TAA–02971; North American Knitting Co., Mansfield, OH; March 3, 1998
NAFTA–TAA–03052; Augusta Sportswear, Inc., Meter Plant, Meter, GA: March 30, 1998
NAFTA–TAA–03058 & A; Hampshire Designers, Inc., Winona Knitting Mills Div., La Crescent, MN and Winona, MN: March 29, 1998
NAFTA–TAA–02980; Greenwood Mills, Lindale Manufacturing, Lindale, GA: March 12, 1998
NAFTA–TAA–02990; Siebe Appliance Controls, Cooking and Refrigeration Div., Winterset, IA: March 4, 1998
NAFTA–TAA–02942; Bailey Apparel, Bailey, NC: February 15, 1998
NAFTA–TAA–02851 & A, B; Ithaca Industries, Inc., Gastonia, NC and Cairo, GA and Vidalia, GA: January 8, 1998

NAFTA–TAA–02936 & A, B, C; VF Jeanswear, Houston, MO, Richland, MO, Springfield, MO and Lebanon, MO: February 18, 1998

NAFTA–TAA–03069; Crescent/U.S. Mat, LLC, Art Advantage Div., Hot Springs Plant, Hot Springs, SD: March 30, 1998

NAFTA–TAA–02889; AMP, Inc., Green Valley Road Plant, Seven Valleys, PA: February 1, 1998

NAFTA–TAA–02891; Columbia Forest Products, New Freedom Div., New Freedom, PA: February 1, 1998

NAFTA–TAA–02906; Boise Cascade Corp., Fisher Sawmill, Fisher, LA: February 8, 1998

NAFTA–TAA–03031; International Steel Wool Corp., Springfield, OH: March 3, 1998

NAFTA–TAA–02978; Puget Plastics Corp., Tualatin, OR: March 9, 1998

NAFTA–TAA–02871; Kinzua Resources, L.L.C., Heppner Mill, Heppner, OR: January 28, 1998

NAFTA–TAA–02961 and A; John Deere Consumer Products, Greer, SC and Gastonia, NC: February 22, 1998

NAFTA–TAA–03047; Fleming-Potter Co., Inc., Peoria, IL: February 27, 1998

NAFTA–TAA–02887; Custom Packaging Systems, Inc., Rapid City, SD: February 2, 1998

NAFTA–TAA–02769; Zenith Electronics Corp., Rauland Div., Melrose Park, IL: December 4, 1997

NAFTA–TAA–02939; KLH Industries, Inc., Headquartered in Clinton, MS & Operating at Various Locations in MS: February 4, 1998

NAFTA–TAA–02932; Westinghouse Electric Co., Energy Systems Business Unit (ESBU), Pensacola, FL: March 18, 1999

NAFTA–TAA–02967; Carolina Maid Products, Inc., Granite Quarry, NC: March 3, 1998

NAFTA–TAA–02905 & A; Chinook Group, Inc., North Branch, MN and St. Paul, MN: January 24, 1998

NAFTA–TAA–02983; Brown Jordan Co., Newport, AR: February 22, 1998

NAFTA–TAA–02940; Therm-O-Disc, Inc., El Paso, TX: February 21, 1998

I hereby certify that the aforementioned determinations were issued during the month of April, 1999. Copies of these determinations are available for inspection in Room C–4318, U.S. Department of Labor, 200 Constitution Avenue, NW, Washington, DC 20210 during normal business hours or will be mailed to persons who write to the above address.

Dated: May 3, 1999.

Grant D. Beale,

Acting Director, Office of Trade Adjustment Assistance.

[FR Doc. 99–11852 Filed 5–10–99; 8:45 am]

BILLING CODE 4510–30–M

LIBRARY OF CONGRESS

Copyright Office

[Docket No. 97–1 CARP SD 92–95]

Distribution of 1992, 1993, 1994, and 1995 Satellite Royalty Funds

AGENCY: Copyright Office, Library of Congress.

ACTION: Announcement of the schedule for the proceeding.

SUMMARY: The Librarian of Congress is announcing the schedule for the 180-day arbitration period for the distribution of the 1992–95 satellite carrier compulsory license royalty fees.

EFFECTIVE DATE: May 11, 1999.

ADDRESSES: All hearings and meetings for the 1992–95 satellite distribution proceeding shall take place at the Library of Congress, James Madison Memorial Building, Room LM–414, First and Independence Avenue, SE., Washington, DC. 20540.

FOR FURTHER INFORMATION CONTACT: David O. Carson, General Counsel, or William J. Roberts, Jr., Senior Attorney, PO Box 70977, Southwest Station, Washington, DC 20024. Telephone: (202) 707–8380. Telefax: (202) 252–3423.

SUPPLEMENTARY INFORMATION:

Background

Section 251.11(b) of 37 CFR provides:

> At the beginning of each proceeding, the CARP shall develop the original schedule of the proceeding which shall be published in the **Federal Register** at least seven calendar days in advance of the first meeting. Such announcement shall state the times, dates, and place of the meetings, the testimony to be heard, whether any of the meetings, or any portion of a meeting, is to be closed, and if so, which ones, and the name and telephone number of the person to contact for further information.

This notice fulfills the requirements of § 251.11(b) for Phase I of the proceeding to determine the distribution of satellite carrier compulsory license royalty fees for the years 1992–95.

On January 31, 1997, the Copyright Office published a notice in the **Federal Register** requesting comment as to the existence of Phase I and/or Phase II controversies concerning the distribution of the 1992, 1993, 1994, and 1995 satellite royalty fees, and in the event that a controversy exists, whether to consolidate the determination of the distribution of the 1992–95 royalty fees into a single proceeding, or to conduct multiple proceedings. 62 FR 4814 (January 31, 1997). The notice also requested that each interested party file a Notice of Intent to Participate, indicating the level of participation for each year, i.e., Phase I, Phase II, or both, with the Office. In response to this notice, the following parties identified the existence of controversies for distribution of the 1992–95 funds: James Cannings;[1] the American Society of Composers, Authors and Publishers (ASCAP), Broadcast Music, Inc. (BMI), and SESAC, Inc. (collectively the Music Claimants); Program Suppliers; CBS, Inc.; ABC, Inc.; Public Television Claimants; Devotional Claimants; Home Shopping Network; Multimedia Entertainment, Inc.; National Broadcasting Company, Inc.; Joint Sports Claimants; and Broadcaster Claimants. All but one party favored consolidating the 1992–95 satellite funds into a single distribution proceeding.

On June 4, 1997, the Office issued an Order consolidating the determination of the distribution of the 1992–95 satellite royalty fees into a single proceeding and announcing the precontroversy discovery schedule for a Phase I proceeding. See Order in Docket No. 97–1 CARP SD 92–95 (June 4, 1997). The June 4, 1997, Order set September 8, 1997, as the beginning of the 45-day precontroversy discovery period, with the initiation of the arbitration set for December 1, 1997. This schedule, however, proved unworkable, so at the request of the parties, the Copyright Office rescheduled the start of the 45-day precontroversy discovery period. See Order in Docket No. 97–1 CARP SD 92–95 (August 20, 1997). In fact, the Office reset the schedule three times before establishing a schedule which met the needs of all the parties. See also Orders in Docket No. 97–1 CARP SD 92–95 (January 15, 1998, July 20, 1998, and October 15, 1998).

During this time, the parties continued to negotiate among themselves. As a result, all of the Phase I parties, with the exception of Joint Sports Claimants and Program Suppliers, settled their Phase I claims for 15.5% of the total aggregate amount of the satellite royalty fees for the years 1992–1995. See Order in Docket No. 97–1 CARP SD 92–95 (December 21, 1998).

[1] Mr. Cannings identified only a Phase II controversy.

Thus, the only parties who will appear before the CARP in the current Phase I proceeding are the Joint Sports Claimants and the Program Suppliers. The 45-day precontroversy discovery period for these parties began on January 8, 1999, and proceeded according to the schedule announced in the October 15, 1998, Order. However, the April 5 initiation date set in that schedule has been rescheduled for May 18, 1999, in order to accommodate conflicts in both the arbitrators' and the parties' schedules. The Office will publish the initiation of the arbitration in the **Federal Register** on May 18, 1999.

Selection of Arbitrators

In accordance with § 251.6 of the CARP rules, the arbitrators have been selected for this proceeding. They are:

The Honorable John W. Cooley (Chairperson)

The Honorable Jeffrey Gulin

The Honorable Curtis E. von Kann.

Schedule for the Proceeding

On April 20, 1999, the parties to this proceeding met with the arbitrators for the purpose of setting a schedule for this proceeding. At that meeting, the parties and the arbitrators agreed to the following schedule:

Presentation of Direct Cases:	
Opening statement: Joint Sports Claimants (JSC)	May 18, 1999.
Testimony for JSC [2]:	
Witnesses: (week 1)	
Paul Beeston, Paul Bortz, James Trautman, Gilbert Korta, Kimberly Gordon	May 18–22, 1999.
Witnesses: (week 2)	
Glen Friedman, Jeffrey Treeman, Jody Kaveney, Scott Shultz, John Hartman, Edwin Desser	June 1–5, 1999.
Opening Statement: Program Suppliers	June 7, 1999.
Testimony for Program Suppliers:	
Marsha Kessler	June 7, 1999.
Marsha Kessler, Sandra Pope	June 9, 1999.
Linda McLaughlin	June 14, 1999.
Alan Wurtzel, Leonard Kalcheim	June 15, 1999.
Paul Lindstrom	June 16, 1999.
James Von Schilling	June 17, 1999.
Additional Hearing Days (if necessary)	June 22–25, 1999.
Filing Deadline for Written Rebuttal Cases	June 28, 1999.
Presentation of Rebuttal Cases	July 26–27, 1999; August 11–20, 1999.
Filing Deadline for Proposed Findings of Fact and Conclusions of Law	September 13, 1999.
Filing Deadline for Reply Findings of Fact and Conclusions of Law	September 27, 1999.
Closing Arguments	October 14, 1999.
Closing of the 180-day period	November 15, 1999.

[2] JSC did not designate specific dates for the presentation of testimony by its witnesses.

All hearings will begin at 9:30 a.m. and end at 4:30 p.m.

At this time, the parties have not moved to close any portion of the proceeding to the public. Further refinements to the schedule will be announced in open meetings and issued as orders to the parties participating in the proceeding. All changes will be noted in the docket file of the proceeding, as required by the Copyright Office regulations governing the administration of CARP proceedings. 37 CFR 251.11(c).

Dated: May 6, 1999.

David O. Carson,

General Counsel.

[FR Doc. 99–11884 Filed 5–10–99; 9:47 am]

BILLING CODE 1410–33–P

NATIONAL CREDIT UNION ADMINISTRATION

Agency Information Collection Activities: Submission to OMB for Revision to a Currently Approved Information Collection; Comment Request

AGENCY: National Credit Union Administration (NCUA).

ACTION: Request for comment.

SUMMARY: The NCUA intends to submit the following information collection to the Office of Management and Budget (OMB) for review and clearance under the Paperwork Reduction Act of 1995 (Pub. L. 104–13, 44 U.S.C. Chapter 35). This information collection is published to obtain comments from the public.

DATES: Comments will be accepted until July 12, 1999.

ADDRESSES: Interested parties are invited to submit written comments to NCUA Clearance Officer or OMB Reviewer listed below:

Clearance Officer: Mr. James L. Baylen (703) 518–6411, National Credit Union Administration, 1775 Duke Street, Alexandria, Virginia 22314–3428, Fax No. 703–518–6433, E-mail: jbaylen@ncua.gov

OMB Reviewer: Alexander T. Hunt (202) 395–7860, Office of Management and Budget, Room 10226, New Executive Office Building, Washington, DC 20503.

FOR FURTHER INFORMATION CONTACT: Copies of the information collection requests, with applicable supporting documentation, may be obtained by calling the NCUA Clearance Officer, James L. Baylen, (703) 518–6411.

SUPPLEMENTARY INFORMATION: Proposal for the following collection of information:

OMB Number: 3133–0144.

Form Number: NA.

Type of Review: Revision to the currently approved collection.

Title: Examination Survey.

Description: To provide federal credit unions with an opportunity to give NCUA feedback on its examination procedures. NCUA uses the information to evaluate and improve the examination process.

Respondents: Federal credit unions.

Estimated No. of Respondents/ Recordkeepers: 6,799.

Estimated Burden Hours Per Response: 5 minutes.

Frequency of Response: Reporting and Annually.

Estimated Total Annual Burden Hours: 567.

Estimated Total Annual Cost: N/A.

By the National Credit Union Administration Board on May 5, 1999.

Becky Baker,

Secretary of the Board.

[FR Doc. 99–11738 Filed 5–10–99; 8:45 am]

BILLING CODE 7535–01–P

NUCLEAR REGULATORY COMMISSION

[Docket No. 40–8912]

Grace Estate

AGENCY: Nuclear Regulatory Commission.

ACTION: Notice of opportunity for hearing concerning termination of source materials license SUA–1480 and release of the three grace sites in New Mexico for unrestricted use.

SUMMARY: Notice is hereby given that the U.S. Nuclear Regulatory Commission (NRC) has accepted the Final Reclamation Report, submitted by the firm of Comeau, Maldegen, Templeman & Indall, LLP (CMT&I), representing the estate of Michael P. Grace, documenting the reclamation of the three Grace sites in New Mexico. Site 1 is located approximately 20 miles northeast of Gallup, New Mexico. Site 2 is located near Bibo, New Mexico. Site 3 is located approximately 20 miles northwest of Magdalena, New Mexico. An Environmental Assessment (EA) was performed by the NRC staff in support of its review of the Grace Estate's reclamation plan, in accordance with the requirements of Title 10, Code of Federal Regulations (10 CFR) part 51. The conclusion of the EA was a Finding of No Significant Impact (FONSI) for the proposed site reclamation.

The NRC staff has determined that reclamation of the sites was performed in accordance with Amendment No. 1 to Source Materials License SUA–1480, which authorized the licensee, the estate of Michael P. Grace (CMT&I), to perform radiological cleanup and surface reclamation of three non-operating uranium extraction sites in New Mexico. Based on this determination, and in accordance with the licensee's request, Source Materials License SUA–1480 is hereby terminated and the three sites are released for unrestricted use.

FOR FURTHER INFORMATION CONTACT: Ken Hooks, Uranium Recovery and Low-Level Waste Branch, Mail Stop TWFN 7–J9, Division of Waste Management, Office of Nuclear Material Safety and Safeguards, U.S. Nuclear Regulatory Commission, Washington, D.C. 20555. Telephone 301/415–7777. E-mail: KRH1@NRC.GOV

NOTICE OF OPPORTUNITY FOR HEARING: The Commission hereby provides notice that this is a proceeding on an application for a licensing action falling within the scope of Subpart L, ''Informal Hearing Procedures for Adjudications in Materials and Operators Licensing Proceedings,'' of the Commission's Rules of Practice for Domestic Licensing Proceedings and Issuance of Orders in 10 CFR part 2. Pursuant to § 2.1205(a), any person whose interest may be affected by this proceeding may file a request for a hearing. In accordance with § 2.1205(c), a request for a hearing must be filed within thirty (30) days from the date of publication of this **Federal Register** notice. The request for a hearing must be filed with the Office of the Secretary, either:

(1) By delivery to the Rulemakings and Adjudications Staff of the Office of the Secretary at One White Flint North, 11555 Rockville Pike, Rockville, MD 20852, between 7:30 a.m. and 4:15 p.m., Federal workdays; or

(2) By mail or telegram addressed to the Secretary, U.S. Nuclear Regulatory Commission, Washington, DC 20555, Attention: Rulemakings and Adjudications Staff.

Each request for a hearing must also be served by delivering it personally, or by mail, to:

(1) The applicant, Estate of Michael P. Grace, in care of Jon J. Indall, Comeau, Maldegen, Templeman & Indall, LLP, Coronado Building, 141 E. Palace Avenue, Post Office Box 669, Santa Fe, New Mexico 87504–0669.

(2) The NRC staff, by delivery to the Executive Director of Operations, One White Flint North, 11555 Rockville Pike, Rockville, MD 20852, between 7:30 a.m. and 4:15 p.m., Federal workdays; or

(3) By mail addressed to the Executive Director for Operations, U.S. Nuclear Regulatory Commission, Washington, DC 20555.

In addition to meeting other applicable requirements of 10 CFR Part 2 of the Commission's regulations, a request for a hearing filed by a person other than an applicant must describe in detail:

(1) The interest of the requestor in the proceeding;

(2) How that interest may be affected by the results of the proceeding, including the reasons why the requestor should be permitted a hearing, with particular reference to the factors set out in § 2.1205(g);

(3) The requestor's areas of concern about the licensing activity that is the subject matter of the proceeding; and

(4) The circumstances establishing that the request for a hearing is timely in accordance with § 2.1205(c).

Any hearing request that is granted will be held in accordance with the Commission's ''Informal Hearing Procedures for Adjudications in Materials and Operator Licensing Proceedings' in 10 CFR part 2, subpart L.

Dated at Rockville, MD, this 5th day of May, 1999.

For the Nuclear Regulatory Commission.

N. King Stablein,

Acting Chief, Uranium Recovery and Low-Level Waste Branch, Division of Waste Management, Office of Nuclear Material Safety and Safeguards.

[FR Doc. 99–11819 Filed 5–10–99; 8:45 am]

BILLING CODE 7590–01–P

NUCLEAR REGULATORY COMMISSION

[EA 95–009]

Thermal Science, Inc.; Order Imposing Civil Monetary Penalty

I

Thermal Science, Inc. (TSI) is the manufacturer and vendor of fire barrier products known generally as Thermo-Lag. TSI began marketing this product in the early 1980s to licensees of the United States Nuclear Regulatory Commission (NRC) for use in nuclear power plants. TSI represented that Thermo-Lag had undergone independent testing by Industrial Testing Laboratories, Inc. (ITL). Using ITL stationery, TSI issued reports in ITL's name, making it appear that the reports were written by ITL, when in fact they were written by TSI. Many NRC licensees thereafter purchased Thermo-Lag to meet the NRC's fire protection requirements, codified in 10 CFR 50.48 and appendix R to part 50.

II

In 1989 the NRC began receiving licensee reports of problems with installed Thermo-Lag. As part of a subsequent NRC investigation, TSI was questioned in the fall of 1991 about the testing and installation of Thermo-Lag. TSI continued to represent that its product had been independently tested by ITL. However, during an NRC inspection of TSI's facility in December

1991, it was learned that TSI, not ITL, had written the test reports, and that ITL had very limited involvement in the testing process. In 1992 the United States Department of Justice began a criminal investigation of the matter, resulting in indictments and a jury trial in the United States District Court for the District of Maryland in 1995. The jury acquitted TSI and TSI's President, Ruben Feldman, on all of the criminal charges. A written Notice of Violation and Proposed Imposition of Civil Penalties (Notice) in the amount of $900,000 was subsequently served upon TSI by letter dated October 1, 1996. The Notice sets forth nine violations of 10 CFR 50.5, the NRC's ''Deliberate Wrongdoer'' rule.

TSI delayed filing a response to the Notice while it sought a preliminary injunction of NRC's administrative process from the United States District Court for the Eastern District of Missouri. The District Court finally denied the injunction request and dismissed TSI's cause of action by opinion dated June 23, 1998, holding that TSI must exhaust its administrative remedies before seeking judicial relief. Thereafter, on July 7, 1998, TSI filed its answer to the Notice. In its answer, TSI set forth its legal objections to the Notice, and denied each of the 10 CFR 50.5 violations. TSI's appeal from the District Court's June 1998 decision is pending before the United States Court of Appeals for the Eighth Circuit. However, by order dated September 10, 1998, the appeals court denied TSI's motion to stay the NRC's administrative proceeding pending the appeal.

III

After consideration of TSI's answer, the NRC staff has determined, as set forth in the Appendix to this Order, that the violations of 10 CFR 50.5 occurred as stated in the Notice, and that the penalties proposed for the violations designated in the Notice should be imposed.

IV

In view of the foregoing and pursuant to section 234 of the Atomic Energy Act of 1954, as amended (Act), 42 U.S.C. 2282, and 10 CFR 2.205, it is hereby ordered that:

TSI pay civil penalties in the amount of $900,000 within 30 days of the date of this Order, in accordance with NUREG/BR–0254. In addition, at the time of making the payment, TSI shall submit a statement indicating when and by what method payment was made, to the Director, Office of Enforcement, U.S. Nuclear Regulatory Commission, One White Flint North, 11555 Rockville Pike, Rockville, MD 20852–2738.

V

TSI may request a hearing within 30 days of the date of this Order. Where good cause is shown, consideration will be given to extending the time to request a hearing. A request for extension of time must be made in writing to the Director, Office of Enforcement, U.S. Nuclear Regulatory Commission, Washington, DC 20555, and include a statement of good cause for the extension. A request for a hearing should be clearly marked as a ''Request for an Enforcement Hearing'' and shall be submitted to the Secretary, U.S. Nuclear Regulatory Commission, ATTN: Rulemakings and Adjudications Staff, Washington, DC 20555. Copies also shall be sent to the Director, Office of Enforcement, U.S. Nuclear Regulatory Commission, Washington, DC 20555, to the Assistant General Counsel for Materials Litigation and Enforcement at the same address, and to the Regional Administrator, NRC Region III, 801 Warrenville Road, Lisle, IL 60532–4351.

If a hearing is requested, the Commission will issue an Order designating the time and place of the hearing. If TSI fails to request a hearing within 30 days of the date of this Order (or if written approval of an extension of time in which to request a hearing has not been granted), the provisions of this Order shall be effective without further proceedings. If payment has not been made by that time, the matter may be referred to the United States Attorney General for collection.

In the event TSI requests a hearing as provided above, the issues to be considered at such hearing shall be:

(a) Whether TSI was in violation of the Commission's requirements as set forth in the Notice referenced in Section II above; and

(b) whether, on the basis of such violations, this Order should be sustained.

Dated this 3rd day of May, 1999.

For the Nuclear Regulatory Commission.

William D. Travers,

Executive Director for Operations.

Appendix—Evaluation and Conclusion

On October 1, 1996, the NRC issued a Notice of Violation and Proposed Imposition of Civil Penalty (Notice) for violations of NRC requirements identified during an investigation of Thermal Science, Inc. (TSI). The Notice set forth nine violations (designated A through I) of 10 CFR 50.5. TSI's response to the Notice, filed on July 7, 1998, was devoted largely to two legal objections to the Notice: (1) NRC lacks authority to impose a civil penalty on a non-licensee like TSI; and (2) NRC's administrative proceeding is criminal rather than civil, and thus violates the Double Jeopardy Clause of the United States Constitution. These objections repeat those made in TSI's request for a preliminary injunction, filed with the United States District Court for the Eastern District of Missouri. The district court dismissed TSI's injunction request in June 1998. The NRC staff has reviewed TSI's legal objections and finds that they do not bar this administrative action for the following reasons.

The question of whether the Atomic Energy Act of 1954, as amended, 42 U.S.C. 2011 *et seq.* (AEA) provides the NRC with authority to impose civil penalties on non-licensees was examined at the time 10 CFR 50.5 was promulgated. See 56 FR 40664–670 (August 15, 1991). As discussed therein, 10 CFR 50.5 was issued under the general authority of AEA sections 161b and 161i, pursuant to which the Commission may issue any regulation deemed necessary to protect public health. Absent from these statutory provisions is any limitation to whom such regulations may be made applicable. Moreover, in evaluating the general powers conferred on the Commission by Congress, federal courts have uniformly found the AEA's provisions quite broad. In passing the AEA, Congress enacted a regulatory scheme which is virtually unique in the degree to which broad responsibility is reposed in the administering agency, free of close prescription in its charter as to how it shall proceed in achieving the statutory objectives.

Siegel v. *AEC*, 400 F.2d 778, 783 (D.C. Cir. 1968). *See also Power Reactor Development Co.* v. *International Union of Elec. Radio and Mach. Workers AFL–CIO*, 367 U.S. 396 (1961). In exercising its broad rulemaking authority, the Commission explicitly made 10 CFR 50.5 applicable to, among others, any ''supplier'' who provided to one or more NRC licensees ''materials, or other goods or services,'' relating to licensed activities. 10 CFR 50.5(a). As detailed in the Notice, TSI qualifies as such a ''supplier.'' Accordingly, TSI is properly subject to the regulation, even though TSI is not an NRC license.

TSI's Double Jeopardy argument is contrary to the Supreme Court's holding in *Hudson* v. *U.S.*, 118 S.Ct. 488 (1997). The Court there held that while a second ''criminal prosecution'' for the same conduct is prohibited, civil penalties based on the alleged criminal conduct may be lawfully imposed

unless ''the clearest proof'' shows that the statute authorizing the civil penalty can only be construed as a criminal sanction. *Hudson*, 118 S.Ct. at 493. In making this determination, only the ''statute on its face'' is to be evaluated (*Id.*, at 494), and if the statute confers sanction authority upon an administrative agency this is ''prima facie evidence that Congress intended to provide for a civil sanction.'' *Id.*, at 495. In this regard, the Court distinguished between the ''infamous punishment of imprisonment'' imposed following a judicial trial, and money penalties. *Id.*, at 495–96.

Applying *Hudson* to the facts here, the October 1, 1996 Notice informed TSI that the NRC proposed to impose civil penalties pursuant to section 234 of the AEA, 42 U.S.C. 2282, and 10 CFR 2.205.[1] Reading AEA section 234, which is titled ''Civil Monetary Penalties For Violations of Licensing Requirements,'' there can be no doubt that it provides for civil, not criminal, sanctions. Persons are subject to ''civil'' penalties of up to $100,000 ''to be imposed by the Commission.'' 42 U.S.C. 2282(a). Unpaid penalties imposed by the Commission ''may be collected by civil action.'' 42 U.S.C. 2282(b). Even when a penalty matter is referred to the United States Attorney General for collection, the Attorney General is only ''authorized to institute a civil action.'' 42 U.S.C. 2282(c). Section 234 provides only for monetary penalties, with no provisions for imprisonment, and does not contain the word ''criminal.''[2] Similarly, 10 CFR 2.205 provides only for the imposition of civil penalties, and specifies the procedures by which a person charged with violations may contest those violations by requesting an administrative hearing. Accordingly, any administrative action taken by the Commission against TSI pursuant to the Notice will necessarily be civil rather than criminal in nature. In these circumstances the Double Jeopardy Clause does not bar the administrative action even though it arises from some of the same conduct for which TSI was criminally tried in 1995.

With respect to the facts upon which the staff based its proposed action, TSI's response to the Notice denied the nine violations. The NRC's evaluation and conclusion regarding TSI's factual denial are as follows:

Restatement of Violation A

A. Contrary to 10 CFR 50.5, TSI deliberately made statements in an October 5, 1991 letter to the NRC which it knew contained inaccurate and incomplete information material to the NRC, as evidenced by the following examples:

1. In its October 5, 1991 letter, TSI stated that Thermo-Lag had been ''. . . extensively tested by independent testing laboratories on many occasions. . . .'' *See* TSI Letter of October 5, 1991, at 1. TSI's statement was incomplete and inaccurate in that the NRC later determined during an inspection at TSI's offices that test reports bearing the logo of Industrial Testing Laboratories, Inc. (ITL) were actually drafted by TSI, typed by TSI, and issued by TSI. ITL's role was limited to having one of its representatives witness data acquisition on the date of the test, and verify furnace temperature readouts, without having had any involvement in the construction or approval of the test article. Thus, with respect to ITL, the statement that Thermo-Lag had been ''. . . extensively tested by independent testing laboratories on many occasions. . . .'' misrepresented the respective roles of TSI and ITL in Thermo-Lag testing.

2. In its October 5, 1991 letter, TSI stated that Thermo-Lag provides ''a fire barrier of consistent performance[]'' when installed ''in accordance with the instruction manuals in concert with training programs of Thermal Science,'' and that this performance had ''been proven by independent testing on multiple occasions.'' *See* TSI Letter of October 5, 1991, at 2. This statement was inaccurate in that most of the configurations tested by TSI, in those tests that were submitted to the NRC, were not installed in accordance with the TSI instruction manual.

3. In TSI's ''Response To The United States Nuclear Regulatory Commission's Letter Dated 10 September 1991,'' attached to its October 5, 1991 letter, TSI provided results from 1986 tests conducted by Underwriter's Laboratory (UL) regarding ampacity derating tests of one-hour and three-hour Thermo-Lag fire barrier systems, and stated that the values obtained by the UL tests reflected ''the most current and conservative results of tests . . .'' and were ''the most conservative information available to us.''[3] *See* TSI Response at 6 and 12. These statements were inaccurate in that TSI was aware of an alternate baseline UL ampacity derating test that was more current and provided more conservative values than the test results submitted to the NRC on October 5, 1991.

These statements were material to the NRC because they were made by TSI: (1) In response to concerns the NRC had raised about the quality and adequacy of Thermo-Lag, including specific concerns about the nature of the testing performed to qualify Thermo-Lag for use in nuclear power plants; and (2) to influence the NRC's investigation into whether Thermo-Lag met NRC's fire barrier requirements and guidelines. (01011)

This is a Severity Level I violation (Supplement VII) Civil Penalty—$100,000

Summary of TSI's Answer to Violation A

In denying Violation A, TSI stated that at all times it acted and intended to act in accordance with all applicable requirements. TSI stated that no false statements were ever deliberately made by its representatives, and that its representatives ''never deliberately omitted to disclose any material information to the NRC.'' In support of its denial, TSI referenced the fact that based on the evidence presented at the criminal trial in 1995, the jury acquitted TSI of all charges.

NRC Evaluation of TSI's Answer to Violation A

TSI's brief *pro forma* answer on the facts provides no rebuttal or other information regarding the detailed allegations made in Violation A. The answer makes no attempt to explain why the allegations are incorrect. In the absence of new information, the NRC staff continues to believe that violations of NRC requirements occurred as alleged in Violation A, that these violations are properly classified as Severity Level 1, and that these violations carry a high degree of regulatory significance. Accordingly, the NRC staff finds that the proposed civil penalty of $100,000 should be imposed for Violation A.

Restatement of Violation B

B. Contrary to 10 CFR 50.5, during an October 17, 1991 meeting with the NRC Staff, Mr. Rubin Feldman, the President of TSI, deliberately made oral statements to the NRC that he knew

[1] 10 CFR 2.205 is the NRC regulation implementing the statutory authority of 42 U.S.C. 2282. The regulation was also issued under the authority, *inter alia*, of AEA sections 161 b, i, and o, 42 U.S.C. 2201 (b), (i), and (o). See preamble to 10 CFR Part 2.

[2] Section 234 thus stands in sharp contrast to the criminal provisions of the AEA, set forth in sections 221–223, 42 U.S.C. 2271–2273, which either refer to ''criminal violations,'' or specify terms of imprisonment as punishment.

[3] This answer responded to NRC Question I.A.5., ''What are ampacity deratings for 1-hour fire rated THERMO-LAG fire barrier systems[,]'' and NRC Question I.B.5., ''What are ampacity deratings for 3-hour fire rated THERMO-LAG fire barrier systems[,].'' *See* NRC letter to TSI dated September 10, 1991, Enclosure at 1.

contained inaccurate information material to the NRC. With respect to the participation of ITL in the fire barrier testing of Thermo-Lag, the following exchange took place:

Mr. West (NRC): You mentioned in your [October 5, 1991] letter—in fact, you provided us with an enclosure that identifies quite a few tests that had been sponsored, presumably, by TSI. It looks like the bulk of the tests were actually done at your facility, although there seemed to be some involvement of a testing outfit called ITL, Industrial Testing Laboratory. We are not familiar with it; it's not UL or Southwest. Could you fill us in on who ITL is and tell us what involvement they have in each test, in terms of planning, conduct and report writing and documentation base?

Mr. Feldman: Industrial Test Laboratories is a St. Louis-based laboratories. . . . We needed a third part (sic) *observing the various phases* of the testing. We have asked them if they would be willing to do that. They indicated that they would, so they *officiated during the phases of the testing.* That's how the reports were published.

Tr. at 167–8 (emphasis added). The discussion about ITL continued as follows:

Mr. West: . . . What I'm trying to find out is, I think we need to decide if their [ITL's] involvement in the test really would constitute the independence for the test.

Mr. Feldman: *They were very independent. They reviewed all the data. They analyzed all the data. It was as independent as you can make it.*

Tr. at 170 (emphasis added.)

Mr. Feldman's statements were inaccurate and misrepresented the respective roles of ITL and TSI in Thermo-Lag testing. Mr. Feldman knew that ITL did not function as an independent tester of Thermo-Lag, and that ITL's role was limited to having one of its representatives witness data acquisition on the date of the test, and verify furnace temperature readouts, without having any involvement in the construction or approval of the fire barrier/raceway test article.

Mr. Feldman's statements were material to the NRC because Mr. Feldman made them, on behalf of TSI: (1) in response to concerns the NRC had raised about the quality and adequacy of Thermo-Lag, including specific concerns about the nature of the relationship between TSI and ITL regarding the testing performed to qualify Thermo-Lag as 1-hour and 3-hour fire barrier material for use in nuclear power plants; (2) to influence the NRC's investigation into whether Thermo-Lag met NRC's fire protection requirements and guidelines; and (3) to persuade the NRC that, for those Thermo-Lag tests in which ITL had involvement, ITL had acted as an independent, third-party reviewer and analyzer of all the test data. (02011).

This is a Severity Level I violation (Supplement VII) Civil Penalty—$100,000

Summary of TSI's Answer to Violation B

In denying Violation B, TSI stated that at all times it acted and intended to act in accordance with all applicable requirements. TSI stated that no false statements were ever deliberately made by its representatives, and that its representatives ''never deliberately omitted to disclose any material information to the NRC.'' In support of its denial, TSI referenced the fact that based on the evidence presented at the criminal trial in 1995, the jury acquitted TSI of all charges.

NRC Evaluation of TSI's Answer to Violation B

TSI's brief *pro forma* answer on the facts provides no rebuttal or other information regarding the detailed allegations made in Violation B. The answer makes no attempt to explain why the allegations are incorrect. In the absence of new information, the NRC staff continues to believe that violations of NRC requirements occurred as alleged in Violation B, that these violations are properly classified as Severity Level 1, and that these violations carry a high degree of regulatory significance. Accordingly, the NRC staff finds that the proposed civil penalty of $100,000 should be imposed for Violation B.

Restatement of Violation C

C. Contrary to 10 CFR 50.5, TSI deliberately submitted inaccurate information material to the NRC on November 12, 1991, in response to NRC questions sent to TSI by letter dated October 31, 1991, as evidenced by the following examples:

1. The NRC asked TSI to ''provide copies of all TSI correspondence and documents related to UL Project Report 86–NK–23826, File R–6–802, dated January 27, 1987'' dealing with ampacity derating testing used to qualify Thermo-Lag as 1-hour and 3-hour rated fire barrier material. See NRC letter of October 31, 1991, Enclosure at 1, Question 7. In partial response, TSI submitted ITL Report 82–355–F–1 and ITL Report 84–10–5. See TSI's ''Partial Response To The United States Nuclear Regulatory Commission's Letter Dated 31 October 1991'' (attached to TSI's letter dated November 12, 1991), Answer 7–2 (2), at 9, and Attachment 4. This response was inaccurate in that TSI knew ITL Report 82–355–F–1 misrepresented the respective roles of TSI and ITL in the testing of Thermo-Lag. This report's cover sheet carries the ITL logo, indicating that the report was written by ITL. This report is TSI Technical Note 111782, with an ITL cover sheet attached to it. TSI Technical Note 111782 had been written and issued by TSI in November 1981. ITL had no involvement in creating or issuing ITL Report 82–355–F–1, did not witness the subject ampacity test, and had no role in documenting or analyzing the test results.

2. Regarding ITL Report 84–10–5, TSI's November 12, 1991 response was further inaccurate in that TSI knew that this ITL Report also misrepresented the respective roles of TSI and ITL in the testing of Thermo-Lag. The report's headings and titles indicate that the report was written by ITL. In fact, TSI wrote ITL Report 84–10–5, using ITL stationery that TSI had obtained from ITL. Section 2 of the report represents that ITL compared the test data to baseline data obtained in an October 1981 test (a reference to the test reported in ITL Report 82–355–F–1). In fact, no such data comparison was performed by ITL.

The inaccurate information TSI submitted to the NRC on November 12, 1991, in the form of the ''ITL'' reports, was material to the NRC because TSI's submittal was made: (1) In response to concerns the NRC had raised about the quality and adequacy of Thermo-Lag, including specific concerns about the ampacity derating testing used to qualify Thermo-Lag as 1-hour and 3-hour rated fire barrier material for use in nuclear power plants; and (2) to influence the NRC's investigation into whether Thermo-Lag met NRC's fire protection requirements. (03011)

This is a Severity Level I violation (Supplement VII) Civil Penalty—$100,000

Summary of TSI's Answer to Violation C

In denying Violation C, TSI stated that at all times it acted and intended to act in accordance with all applicable requirements. TSI stated that no false statements were ever deliberately made by its representatives, and that its representatives ''never deliberately omitted to disclose any material information to the NRC.'' In support of its denial, TSI referenced the fact that based on the evidence presented at the criminal trial in 1995, the jury acquitted TSI of all charges.

NRC Evaluation of TSI's Answer to Violation C

TSI's brief *pro forma* answer on the facts provides no rebuttal or other information regarding the detailed allegations made in Violation C. The answer makes no attempt to explain why the allegations are incorrect. In the absence of new information, the NRC staff continues to believe that violations of NRC requirements occurred as alleged in Violation C, that these violations are properly classified as Severity Level 1, and that these violations carry a high degree of regulatory significance. Accordingly, the NRC staff finds that the proposed civil penalty of $100,000 should be imposed for Violation C.

Restatement of Violation D

D. Contrary to 10 CFR 50.5, TSI deliberately submitted inaccurate information material to the NRC on December 3, 1991, in further response to NRC questions sent to TSI by letter dated October 31, 1991, as evidenced by the following examples:

1. The NRC asked TSI to ''provide full copies of ITL fire test reports 82–11–80 and 82–11–81, including daily work sheets, quality assurance documentation, and thermocouple temperature records.'' NRC letter of October 31, 1991, Enclosure at 3, Question 19. This request was generated by Mr. Feldman's offer to provide the quality control records attached to ITL reports 82–11–80 and 82–11–81, which were needed to answer a question concerning test article construction. *See* October 17, 1991 transcript, at 89–90; 190–91. In response, TSI submitted complete copies of ITL Report 82–11–80 and ITL Report 82–11–81, which were the generic 1-hour and 3-hour test reports used to qualify Thermo-Lag as 1-hour and 3-hour fire barrier material for use in nuclear power plants. *See* TSI's ''Supplemental Response To The Remaining Questions Contained In The United States Nuclear Regulatory Commission's Letter Dated 31 October 1991'' (attached to TSI's letter dated December 3, 1991), Answer 19, at 9, and Enclosures 8 and 9. This response was inaccurate in that TSI knew ITL Report 82–11–80 misrepresented the respective roles of TSI and ITL in the testing of Thermo-Lag. The Proprietary Rights statement of TSI, included as part of the report, stated that the report was prepared by ITL. In fact, the report was not prepared by ITL. TSI wrote ITL Report 82–11–80, using ITL stationery that TSI had obtained from ITL. Section 3 of ITL Report 82–11–80 states that the subject testing was performed ''under the supervision and total control of Industrial Testing Laboratories, of St. Louis, Missouri, an independent testing laboratory.'' In fact, the test was conducted under the supervision and control of TSI, with an ITL representative merely witnessing the test and verifying furnace temperature readouts.

2. Regarding ITL Report 82–11–81, TSI's December 3, 1991 response was further inaccurate in that TSI knew that this ITL Report also misrepresented the respective roles of TSI and ITL in the testing of Thermo-Lag. The Proprietary Rights statement of TSI, included as part of the report, stated that the report was prepared by ITL. In fact, the report was not prepared by ITL. TSI wrote ITL Report 82–11–81, using ITL stationery that TSI had obtained from ITL. Section 3 of ITL Report 82–11–81 stated that the subject testing was performed ''under the supervision and total control of Industrial Testing Laboratories, of St. Louis, Missouri, an independent testing laboratory.'' In fact, the test was conducted under the supervision and control of TSI, with ITL representative Donald Storment merely witnessing the tests and verifying furnace temperature readouts, which took place between September 10 and October 12, 1982. Moreover, several daily work sheet pages from Section 7 of the report are represented as having been signed by Mr. Storment. In fact, those pages contain replicated signatures of Mr. Storment, which TSI added to the report without the knowledge or consent of either ITL or Mr. Storment. For the daily work sheets that Mr. Storment did sign, TSI instructed Mr. Storment to backdate those sheets to make it appear that he had witnessed TSI work performed in August and early September of 1982, when, in fact, Mr. Storment had not witnessed that work.

The inaccurate information TSI submitted to the NRC on December 3, 1991 was material to the NRC because TSI's submittal was made: (1) In response to concerns the NRC had raised about the quality and adequacy of Thermo-Lag, including specific questions about the test articles discussed in ITL Reports 82–11–80 and 82–11–81, which were generic tests TSI had used to qualify Thermo-Lag as 1-hour and 3-hour rated fire barrier material for use in nuclear power plants; and (2) to influence the NRC's investigation into whether Thermo-Lag met NRC's fire protection requirements. (04011)

This is a Severity Level I violation (Supplement VII)

Civil Penalty—$100,000

Summary of TSI's Answer to Violation D

In denying Violation D, TSI stated that at all times it acted and intended to act in accordance with all applicable requirements. TSI stated that no false statements were ever deliberately made by its representatives, and that its representatives ''never deliberately omitted to disclose any material information to the NRC.'' In support of its denial, TSI referenced the fact that based on the evidence presented at the criminal trial in 1995, the jury acquitted TSI of all charges.

NRC Evaluation of TSI's Answer to Violation D

TSI's brief *pro forma* answer on the facts provides no rebuttal or other information regarding the detailed allegations made in Violation D. The answer makes no attempt to explain why the allegations are incorrect. In the absence of new information, the NRC staff continues to believe that violations of NRC requirements occurred as alleged in Violation D, that these violations are properly classified as Severity Level 1, and that these violations carry a high degree of regulatory significance. Accordingly, the NRC staff finds that the proposed civil penalty of $100,000 should be imposed for Violation D.

Restatement of Violation E

E. Contrary to 10 CFR 50.5, TSI deliberately made a statement in a May 8, 1992 letter to the NRC which it knew contained inaccurate information material to the NRC. In this letter, TSI stated that its ongoing test program at Omega Point Laboratories was ''under the total control of Omega Point.'' *See* TSI Letter of May 8, 1992, at 2. This statement was inaccurate in that this test program was not under the total control of Omega Point Laboratories. For example, the construction of the test articles and placement of the test thermocouples was under TSI's control.

This statement was material to the NRC because TSI submitted it: (1) In response to concerns the NRC had raised about the quality and adequacy of Thermo-Lag, including specific concerns about the misleading nature of the ''ITL'' reports; and (2) to persuade the NRC that TSI was now subjecting Thermo-Lag to truly independent testing. (05011)

This is a Severity Level I violation (Supplement VII) Civil Penalty—$100,000

Summary of TSI's Answer to Violation E

In denying Violation E, TSI stated that at all times it acted and intended to act in accordance with all applicable requirements. TSI stated that no false statements were ever deliberately made by its representatives, and that its representatives ''never deliberately omitted to disclose any material information to the NRC.'' In support of its denial, TSI referenced the fact that based on the evidence presented at the criminal trial in 1995, the jury acquitted TSI of all charges.

NRC Evaluation of TSI's Answer to Violation E

TSI's brief *pro forma* answer on the facts provides no rebuttal or other information regarding the allegations made in Violation E. The answer makes no attempt to explain why the allegations are incorrect. In the absence of new information, the NRC staff continues to believe that violations of NRC requirements occurred as alleged in Violation E, that these violations are properly classified as Severity Level 1, and that these violations carry a high degree of regulatory significance. Accordingly, the NRC staff finds that the proposed civil penalty of $100,000 should be imposed for Violation E.

Restatement of Violation F

F. Contrary to 10 CFR 50.5, TSI deliberately made statements in a June 16, 1992 letter to the NRC which it knew contained inaccurate information material to the NRC, including but not limited to the following examples:

1. TSI stated that its continuing test program at Omega Point Laboratories was ''under the total control of Omega Point.'' *See* TSI Letter of June 16, 1992, at 2. This statement was inaccurate in that this test program was not under the total control of Omega Point. For example, the construction of the test articles and placement of the test thermocouples was under TSI's control.

2. TSI stated that the tests were being conducted in accordance with, among other criteria, the ''applicable prerequisites of'' NRC Generic Letter 86–10. *See* TSI Letter of June 16, 1992, at 3. This statement was inaccurate in that these tests were not being conducted in accordance with the guidance of NRC Generic Letter 86–10.

These statements were material to the NRC because TSI submitted them: (1) In response to concerns the NRC had raised about the quality and adequacy of Thermo-Lag, including specific concerns about the misleading nature of the ''ITL'' reports; and (2) to persuade the NRC that TSI was now subjecting Thermo-Lag to truly independent testing. (06011)

This is a Severity Level I violation (Supplement VII) Civil Penalty—$100,000

Summary of TSI's Answer to Violation F

In denying Violation F, TSI stated that at all times it acted and intended to act in accordance with all applicable requirements. TSI stated that no false statements were ever deliberately made by representatives, and that its representatives ''never deliberately omitted to disclose any material information to the NRC.'' In support of its denial, TSI referenced the fact that based on the evidence presented at the criminal trial in 1995, the jury acquitted TSI of all charges.

NRC Evaluation of TSI's Answer to Violation F

TSI's brief pro *forma answer* on the facts provides no rebuttal or other information regarding the detailed allegations made in Violation F. The answer makes no attempt to explain why the allegations are incorrect. In the absence of new information, the NRC staff continues to believe that violations of NRC requirements occurred as alleged in Violation F, that these violations are properly classified as Severity Level 1, and that these violations carry a high degree of regulatory significance. Accordingly, the NRC staff finds that the proposed civil penalty of $100,000 should be imposed for Violation F.

Restatement of Violation G

G. Contrary to 10 CFR 50.5, TSI deliberately made a statement in a June 22, 1992 letter to the NRC which it knew contained inaccurate information material to the NRC. In this letter, TSI stated that the TSI-sponsored tests conducted at Omega Point Laboratories were ''under their (Omega Point Laboratories') total control, which also included quality control during construction.'' *See* TSI Letter of June 22, 1992, at 2. This statement was inaccurate in that (1) TSI knew that the test program was not under the total control of Omega Point and that (2) TSI knew that quality control during construction of the test articles was not under the total control of Omega Point.

This statement was material to the NRC because TSI submitted it: (1) In response to concerns the NRC had raised about the quality and adequacy of Thermo-Lag, including specific concerns about the misleading nature of the ''ITL'' reports; and (2) to persuade the NRC that TSI was now subjecting Thermo-Lag to truly independent testing. (07011)

This is a Severity Level I violation (Supplement VII) Civil Penalty—$100,000

Summary of TSI's Answer to Violation G

In denying Violation G, TSI stated that at all times it acted and intended to act in accordance with all applicable requirements. TSI stated that no false statements were ever deliberately made by its representatives, and that its representatives ''never deliberately omitted to disclose any material information to the NRC.'' In support of its denial, TSI referenced the fact that based on the evidence presented at the criminal trial in 1995, the jury acquitted TSI of all charges.

NRC Evaluation of TSI's Answer to Violation G

TSI's brief *pro forma* answer on the facts provides no rebuttal or other information regarding the allegations made in Violation G. The answer makes no attempt to explain why the allegations are incorrect. In the absence of new information, the NRC staff continues to believe that violations of NRC requirements occurred as alleged in Violation G, that these violations are properly classified as Severity Level 1, and that these violations carry a high degree of regulatory significance. Accordingly, the NRC staff finds that the proposed civil penalty of $100,000 should be imposed for Violation G.

Restatement of Violation H

H. Contrary to 10 CFR 50.5, TSI deliberately made a statement in a July 29, 1992 letter to the NRC which it knew contained inaccurate information material to the NRC. In this letter, TSI stated that the 1986 ampacity testing ''was done by Underwriters Laboratories [sic] in Chicago under its [Underwriters Laboratory's] total control.'' TSI Letter of July 29, 1992, at 4. This statement was inaccurate in that TSI knew that the referenced ampacity testing was not under the total control of Underwriters Laboratory.

This statement was material to the NRC because TSI submitted it: (1) In response to concerns the NRC had raised about the quality and adequacy of Thermo-Lag, including specific concerns about the ampacity derating testing used to qualify Thermo-Lag as 1-hour and 3-hour rated fire barrier material for use in nuclear power plants; and (2) to influence how the NRC disseminated information to the nuclear

industry about the performance of Thermo-Lag products. (08011)

This is a Severity Level I violation (Supplement VII) Civil Penalty—$100,000

Summary of TSI's Answer to Violation H

In denying Violation H, TSI stated that at all times it acted and intended to act in accordance with all applicable requirements. TSI stated that no false statements were ever deliberately made by its representatives, and that its representatives ''never deliberately omitted to disclose any material information to the NRC.'' In support of its denial, TSI referenced the fact that based on the evidence presented at the criminal trial in 1995, the jury acquitted TSI of all charges.

NRC Evaluation of TSI's Answer to Violation H

TSI's brief *pro forma* answer on the facts provides no rebuttal or other information regarding the allegations made in Violation H. The answer makes no attempt to explain why the allegations are incorrect. In the absence of new information, the NRC staff continues to believe that violations of NRC requirements occurred as alleged in Violation H, that these violations are properly classified as Severity Level 1, and that these violations carry a high degree of regulatory significance. Accordingly, the NRC staff finds that the proposed civil penalty of $100,000 should be imposed for Violation H.

Restatement of Violation I

I. Contrary to 10 CFR 50.5, on or about August 31, 1992, TSI deliberately submitted to the NRC ITL Reports 85–6–283, 85–2–382, 85–5–314, 85–11–227, 86-7–472, 87–5–435, 87–6–350, 85–1–106, and 85–4–377. These reports misrepresented the respective roles of TSI and ITL in the testing of Thermo-Lag. TSI knew these reports contained inaccurate information material to the NRC, as evidenced by the following examples:

1. Regarding ITL Report 85–6–283, the report's headings and titles indicate that the report was prepared by ITL. This information was inaccurate in that TSI wrote this report, using ITL stationery that TSI had obtained from ITL. Section 3 of the report stated that the subject testing was conducted ''under the direct supervision and total control of Industrial Testing Laboratories, Inc.'' In fact, the test had been conducted under the supervision and control of TSI, with an ITL representative merely witnessing the test and verifying furnace temperature readouts. Page (i) of the report represents that the ITL representative witnessing the test (Dave Siegel) was a professional engineer. However, subsequent NRC review has determined that Dave Siegel was not a professional engineer, did not have a college degree, and that TSI was aware of his lack of qualifications. Page (i) of the report also represents that Allan Siegel reviewed, approved, and signed the report on behalf of ITL. However, subsequent NRC review has determined that page (i) contains the replicated signature of Allan Siegel, which TSI added to the report without the knowledge or consent of Allan Siegel. Daily work sheets contained in Section 6 of the report were altered by TSI to make it appear that Dave Siegel witnessed TSI's construction of the test article on May 17, 1985, when in fact Dave Siegel only witnessed the test itself, which was performed on June 19, 1985. Similarly, in Section 7 of the report, TSI forged the initials of Dave Siegel on work sheets to make it appear that Dave Siegel was present on May 17, 1985, when TSI constructed the test article.

2. Regarding ITL Report 85–2–382, the report's headings and titles indicate that the report was prepared by ITL. This information was inaccurate in that TSI wrote this report, using ITL stationery that TSI had obtained from ITL. Section 3 of the report stated that the subject testing was conducted ''under the direct supervision and total control of Industrial Testing Laboratories, Inc.'' In fact, the test had been conducted under the supervision and control of TSI, with an ITL representative merely witnessing the test and verifying furnace temperature readouts.

3. Regarding ITL Report 85–5–314, the report's headings and titles indicate that the report was prepared by ITL. This information was inaccurate in that TSI wrote this report, using ITL stationery that TSI had obtained from ITL. Section 3 of the report stated that the subject testing was conducted ''under the direct supervision and total control of Industrial Testing Laboratories, Inc.'' In fact, the test had been conducted under the supervision and control of TSI, with an ITL representative merely witnessing the test and verifying furnace temperature readouts. Page (i) of the report represents that the ITL representative witnessing the test (Mike White) was a professional engineer. This is inaccurate in that Mr. White was not a professional engineer, and at that time TSI knew that Mr. White was not a professional engineer. Among the daily work sheets contained in Section 6 of the report are ones signed by Mike White, regarding test article work performed by TSI on May 14, 1985. These work sheets are inaccurate in that Mr. White was present only during the test itself on May 21, 1985. In fact, TSI instructed Mr. White to backdate the work sheets he signed to make it appear that he had witnessed TSI May 14 work when, in fact, he had not witnessed that work.

4. Regarding ITL Report 85–11–227, the report's headings and titles indicate that the report was prepared by ITL. This information was inaccurate in that TSI wrote this report, using ITL stationery that TSI had obtained from ITL. Section 3 of the report stated that the subject testing was conducted ''under the direct supervision and total control of Industrial Testing Laboratories, Inc.'' In fact, the test had been conducted under the supervision and control of TSI, with an ITL representative merely witnessing the test and verifying furnace temperature readouts. Among the daily work sheets contained in Section 6 of the report are ones signed by Mike White, regarding test article work performed by TSI on November 8, 1985. Section 6 is inaccurate in that Mr. White was present only during the test itself on November 19, 1985. In fact, Mr. White was instructed by TSI to sign work sheets to make it appear that he had witnessed TSI's November 8 work when, in fact, he had not witnessed that work.

5. Regarding ITL Report 86–7–472, the report's headings and titles indicate that the report was prepared by ITL. This information was inaccurate in that TSI wrote this report, using ITL stationery that TSI had obtained from ITL. Section 3 of the report stated that the subject testing was conducted on August 1, 1986 ''under the direct supervision and total control of Industrial Testing Laboratories, Inc.'' In fact, the test had been conducted under the supervision and control of TSI, with an ITL representative merely witnessing the test and verifying furnace temperature readouts. Contained within this report is a ''Verification of Application'' document dated July 31, 1986 and signed by R. A. Lohman on behalf of TSI. This document refers to ITL Test Article No. 86–7–472. This information was inaccurate in that there were never any ITL test articles, as ITL neither built nor helped to assemble any of the articles tested by TSI.

6. Regarding ITL Report 87–5–435, the report's headings and titles indicate that the report was prepared by ITL. This information was inaccurate in that TSI wrote this report, using ITL stationery that TSI had obtained from ITL. Section 3 of the report stated that the subject

testing was conducted ''under the direct supervision and total control of Industrial Testing Laboratories, Inc.'' In fact, the test had been conducted under the supervision and control of TSI, with an ITL representative merely witnessing the test and verifying furnace temperature readouts.

7. Regarding ITL Report 87–6–350, the report's headings and titles indicate that the report was prepared by ITL. This information was inaccurate in that TSI wrote this report, using ITL stationery that TSI had obtained from ITL. Section 3 of the report stated that the subject testing was conducted ''under the direct supervision and total control of Industrial Testing Laboratories, Inc.'' In fact, the test had been conducted under the supervision and control of TSI, with an ITL representative merely witnessing the test and verifying furnace temperature readouts.

8. Regarding ITL Report 85–1–106, the report's headings and titles indicate that the report was prepared by ITL. This information was inaccurate in that TSI wrote this report, using ITL stationery that TSI had obtained from ITL. Section 3 of the report stated that the subject testing was conducted ''under the direct supervision and total control of Industrial Testing Laboratories, Inc.'' In fact, the test had been conducted under the supervision and control of TSI, with an ITL representative merely witnessing the test and verifying furnace temperature readouts.

9. Regarding ITL Report 85–4–377, the report's headings and titles indicate that the report was prepared by ITL. This information was inaccurate in that TSI wrote this report, using ITL stationery that TSI had obtained from ITL. Page (i) of the report represents that the ITL representative witnessing the test (Clarence Bester) was a professional engineer. This is inaccurate in that Mr. Bester was not a professional engineer. Section 3 of the report stated that the subject testing was conducted ''under the direct supervision and total control of Industrial Testing Laboratories, Inc.'' In fact, the test had been conducted under the supervision and control of TSI, with an ITL representative merely witnessing the test and verifying furnace temperature readouts.

The reports TSI submitted to the NRC on or about August 31, 1992 were material to the NRC because they were submitted by TSI: (1) In response to concerns the NRC had raised about the quality and adequacy of Thermo-Lag products; (2) in the context of an ongoing NRC investigation into concerns about the quality and performance of Thermo-Lag products; and (3) to influence the NRC's investigation into whether Thermo-Lag products met the fire barrier requirements of 10 CFR 50.48 and 10 CFR part 50, appendix R. (09011)

This is a Severity Level I violation (Supplement VII)

Civil Penalty—$100,000

Summary of TSI's Answer to Violation I

In denying Violation I, TSI stated that at all times it acted and intended to act in accordance with all applicable requirements. TSI stated that no false statements were ever deliberately made by its representatives, and that its representatives ''never deliberately omitted to disclose any material information to the NRC.'' In support of its denial, TSI referenced the fact that based on the evidence presented at the criminal trial in 1995, the jury acquitted TSI of all charges.

NRC Evaluation of TSI's Answer to Violation I

TSI's brief pro forma answer on the facts provides no rebuttal or other information regarding the detailed allegations made in Violation I. The answer makes no attempt to explain why the allegations are incorrect. In the absence of new information, the NRC staff continues to believe that violations of NRC requirements occurred as alleged in Violation I, that these violations are properly classified as Severity Level 1, and that these violations carry a high degree of regulatory significance. Accordingly, the NRC staff finds that the proposed civil penalty of $100,000 should be imposed for Violation I.

NRC Conclusion

The NRC has concluded that the violations alleged in the Notice occurred as stated. TSI did not provide any basis for reducing the severity level of the violations, and did not provide any basis for mitigation of the proposed civil penalties. Consequently, the proposed civil penalty in the amount of $900,000 should be imposed on TSI.

[FR Doc. 99–11818 Filed 5–10–99; 8:45 am]

BILLING CODE 7590–01–P

NUCLEAR REGULATORY COMMISSION

[Docket No. 50–482]

Wolf Creek Nuclear Operating Corporation (Wolf Creek Generating Station); Exemption

I

Wolf Creek Nuclear Operating Corporation (WCNOC or licensee) is the holder of Facility Operating License No. NPF–42, which authorizes operation of the Wolf Creek Generating Station (WCGS). The license provides, among other things, that the licensee is subject to all rules, regulations, and orders of the Commission now and hereafter in effect.

The facility is a pressurized water reactor located at the licensee's site in Coffey County, Kansas.

II

Section 50.60(a) to 10 CFR part 50 requires that except as provided in § 50.60(b), all light-water nuclear power reactors, other than reactor facilities for which the certifications required under section 50.82(a)(1) have been submitted, must meet the fracture toughness and material surveillance program requirements for the reactor coolant pressure boundary set forth in appendices G and H of 10 CFR part 50. Section 50.60(b) of 10 CFR part 50 states that proposed alternatives to the described requirements of appendices G and H of part 50 or portions thereof may be used when an exemption is granted by the Commission under 10 CFR 50.12.

III

By letter dated December 29, 1998, WCNOC requested that the NRC exempt WCGS from the application of specific requirements of 10 CFR 50.60 and appendix G to 10 CFR Part 50. Specifically, WCNOC proposes to use American Society for Mechanical Engineers (ASME) Code Case N–514 to permit setting the pressure setpoint of WCGS's cold overpressure mitigation system (COMS) such that the pressure-temperature (P–T) limits required by appendix G of 10 CFR part 50 could be exceeded by ten percent during a low temperature pressure transient.

The Commission has established requirements in 10 CFR part 50 to protect the integrity of the reactor coolant system pressure boundary. As a part of these, appendix G of 10 CFR part 50 requires that P–T limits be established for reactor pressure vessels (RPVs) during normal operation and vessel hydrostatic testing. As stated in appendix G, ''The appropriate requirements on . . . the pressure-temperature limits . . . must be met for all conditions.'' In order to avoid approaching these P–T limit curves and provide pressure relief during low temperature overpressurization events, pressurized water reactor licensees have installed protection systems (COMS) as part of the reactor coolant system pressure boundary. WCNOC is required as part of the WCGS Technical Specifications (TS) to develop, update,

and submit reactor vessel P–T limits and COMS setpoints for NRC review and approval.

WCNOC determined that the exemption request from the provisions of 10 CFR 50.60 and appendix G was necessary since these regulations require, as noted above, that reactor vessel conditions not exceed the P–T limits established by appendix G. In referring to 10 CFR 50.12 on specific exemptions, WCNOC cited special circumstances regarding achievement of the underlying purpose of the regulations as their basis for requesting this exemption (10 CFR 50.12(a)(2)(ii)).

WCNOC noted in support of the 10 CFR 50.12(a)(2)(ii) criteria that the underlying purpose of the subject regulation is to establish fracture toughness requirements for ferritic materials of pressure retaining components of the reactor coolant pressure boundary. To accomplish this, appendix G of Section XI of the ASME Code requires the P–T limits be calculated: (a) Using a safety factor of 2 on the principal membrane (pressure) stresses, (b) with margin added to the reactor vessel nil ductility reference temperature (RT_{NDT}) in accordance with Regulatory Guide 1.99, Rev. 2, ''Radiation Embrittlement of Reactor Vessel Materials,'' (c) assuming a flaw at the surface with a depth of ¼ of the vessel wall thickness and a length of 6 times its depth, and (d) using a conservative fracture toughness curve that is based on the lower bound of static, dynamic, and crack arrest fracture toughness tests on material similar to the reactor vessel material. Code Case N–514 provides for normal operation within the P–T limits determined in accordance with ASME Section XI, appendix G, but allows determination of setpoints for COMS events such that the maximum pressure in the vessel would not exceed 110 percent of the appendix G limits.

WCNOC proposed that establishing the COMS pressure setpoint in accordance with the N–514 provisions, such that the vessel pressure would not exceed 110 percent of the P–T limit allowances, would still provide an acceptable level of safety and mitigate the potential for an inadvertent actuation of the COMS. The safety margins provided by application of Code Case N–514 result in a safety factor of 1.8 on the principal membrane (pressure) stresses, with all other factors, including assumed flaw size and fracture toughness, remaining the same as ASME Section XI, appendix G, methodology. Due to the isothermal nature of the COMS events, the margin with respect to toughness for a COMS transient is within the range provided by ASME Section XI, appendix G, for normal heatup and cooldown in the low temperature range. Thus, applying Code Case N–514 will satisfy the intent of 10 CFR 50.60 for fracture toughness requirements. Further, application of Code Case N–514 will relieve operational restrictions for WCGS; it will reduce the potential for inadvertent RCS pressure relief events, thereby improving plant safety, and will reduce unnecessary burdens on operators during important plant evolutions.

The Commission has determined that application of 10 CFR 50.60 in these particular circumstances is not necessary to achieve the underlying purpose of that rule and that the use of Code Case N–514 would meet the underlying intent of the regulation. Based upon a consideration of the conservatisms which are explicitly defined in the appendix G methodology, it was concluded that permitting the COMS setpoint to be established such that the vessel pressure would not exceed 110 percent of the limit defined by P–T limit curves would provide an adequate margin of safety against brittle failure of the reactor vessel. This is also consistent with the determination that has been reached for other licensees under similar conditions based on the same considerations. Therefore, the exemption requested under the special circumstances of 10 CFR 50.12(a)(2)(ii) was found to be acceptable. The staff also agrees that limiting the potential for inadvertent COMS actuation may improve plant safety.

IV

The Commission has determined that, pursuant to 10 CFR 50.12, this exemption is authorized by law, will not present an undue risk to the public health and safety, is consistent with the common defense and security, and is otherwise in the public interest. Therefore, the Commission hereby grants Wolf Creek Nuclear Operating Corporation an exemption from the requirements of 10 CFR 50.60 in order to apply ASME Code Case N–514 for determining the WCGS cold overpressurization mitigation system pressure setpoint.

Pursuant to 10 CFR 51.32, the Commission has determined that the granting of this exemption will have no significant impact on the environment (64 FR 23136).

This exemption is effective upon issuance.

Dated at Rockville, Md., this 30th day of April 1999.

For the Nuclear Regulatory Commission.

John A. Zwolinski,

Director, Division of Licensing Project Management, Office of Nuclear Reactor Regulation.

[FR Doc. 99–11817 Filed 5–10–99; 8:45 am]

BILLING CODE 7590–01–P

NUCLEAR REGULATORY COMMISSION

Sunshine Act Meeting

AGENCY HOLDING THE MEETING: Nuclear Regulatory Commission.

DATE: Weeks of May 10, 17, 24, and 31, 1999.

PLACE: Commissioners' Conference Room, 11555 Rockville Pike, Rockville, Maryland.

STATUS: Public and Closed.

MATTERS TO BE CONSIDERED:

Week of May 10

Wednesday, May 12

9:00 a.m. Discussion of Management Issues (Closed-Ex. 2 and 6)

Week of May 17—Tentative

There are no meetings scheduled for the Week of May 17.

Week of May 24—Tentative

Thursday, May 27

11:30 a.m. Affirmation Session (Public Meeting) (if needed)

Week of May 31—Tentative

There are no meetings scheduled for the Week of May 31.

The schedule for Commission Meetings is subject to change on short notice. To verify the status of meetings call (recording)—(301) 415–1292. Contact person for more information: Bill Hill (301) 415–1661.

The NRC Commission Meeting Schedule can be found on the Internet at:

http://www.nrc.gov/SECY/smj/schedule.htm

This notice is distributed by mail to several hundred subscribers; if you no longer wish to receive it, or would like to be added to it, please contact the Office of the Secretary, Attn: Operations Branch, Washington, D.C. 20555 (301–415–1661). In addition, distribution of this meeting notice over the Internet system is available. If you are interested in receiving this Commission meeting schedule electronically, please send an electronic message to wmh@nrc.gov or *dkw@nrc.gov*.

Dated: May 7, 1999.

William M. Hill, Jr.,

Secy Tracking Officer, Office of the Secretary.

[FR Doc 99–12003 Filed 5–7–99; 3:03 pm]

BILLING CODE 7590–01–M

SECURITIES AND EXCHANGE COMMISSION

Proposed Collection; Comment Request

Upon Written Request, Copies Available From: Securities and Exchange Commission, Office of Filings and Information Services, Washington, DC 20549

Extension:

Rule 17a–22, SEC. File No. 270–202, OMB Control No. 3235–0196

Rule 17Ab2–1 and Form CA–1, SEC File No. 270–203, OMB Control No. 3235–0195

Rule 15c2–5, SEC File No. 270–195, OMB Control No. 3235–0198

Notice is hereby given that pursuant to the Paperwork Reduction Act of 1995 (44 USC 3501 *et seq.*), the Securities and Exchange Commission (''Commission'') is soliciting comments on the collections of information summarized below. The Commission plans to submit these existing collections of information to the Office of Management and Budget for extension and approval.

Rule 17a–22 under the Securities Exchange Act of 1934 (''Exchange Act'')[1] requires all registered clearing agencies to file with the Commission three copies of all materials they issue or make generally available to their participants or other entities with whom they have a significant relationship. The filings with the Commission must be made within ten days after the materials are issued, and when the Commission is not the appropriate regulatory agency, the clearing agency must file one copy of the material with its appropriate regulatory agency. The Commission is responsible for overseeing clearing agencies and uses the information filed pursuant to Rule 17a–22 to determine whether a clearing agency is implementing procedural or policy changes. The information filed aides the Commission in determining whether such changes are consistent with the purposes of Section 17A of the Exchange Act. Also, the Commission uses the information to determine whether a clearing agency has changed its rules without reporting the actual or prospective change to the Commission as required under Section 19(b) of the Exchange Act.

The respondents to Rule 17a–22 generally are registered clearing agencies.[2] The frequency of filings made by clearing agencies pursuant to Rule 17a–22 varies, but on a average there are approximately 200 filings per year clearing agency. Because the filings consist of materials that have prepared for widespread distribution, the additional cost to the clearing agencies associated with submitting copies to the Commission is relatively small. The Commission staff estimates that the cost of compliance with Rule 17a–22 to all registered clearing agencies is approximately $4,930. This represents one dollar per filing in postage, or a total of $3,400. The remaining $1,530 (or approximately 31% of the total cost of compliance) is the estimated cost of additional printing, envelopes, and other administrative expenses. (The estimated total cost per response is $1.45 per page representing $1.00 per page in postage plus $0.45 for printing, envelopes, and other administrative expenses.)

Rule 17Ab2–1 and Form CA–1 require clearing agencies to register with the Commission and to meet certain requirements with regard to, among other things, a clearing agency's organization, capacities, and rules. The information is collected from the clearing agency upon the initial application for registration on Form CA–1. Therefore, information is collected by amendment to the initial Form CA–1 when material changes in circumstances necessitates modification of the information previously provided to the Commission.

The Commission uses the information disclosed on Form CA–1 to (i) Determine whether an applicant meets the standards for registration set forth in Section 17A of the Exchange Act, (ii) enforce compliance with the Exchange Act's registration requirement, and (iii) provide information about specific registered clearing agencies for compliance and investigatory purposes. Without Rule 17Ab2–1, the Commission could not perform these duties as statutorily required.

There are currently 15 registered clearing agencies, three clearing agencies that have been granted an exemption from registration, and two entities with pending applications for an exemption from clearing agency registration. The Commission staff estimates that each initial Form CA–1 requires approximately 130 hours to complete and submit for approval. Hours required for amendments to Form CA–1 that must be submitted to the Commission in connection with material changes to the initial Form CA–1 can vary, depending upon the nature and extent of the amendment. Since the Commission only receives an average of one submission per year, the aggregate annual burden associated with compliance with Rule 17Ab2–1 and Form CA–1 is 130 hours. Based upon the staff's experience, the average cost to clearing agencies of preparing and filing the initial Form CA–1 is estimated to be $16,391.

Rule 15c2–5 prohibits a broker-dealer from arranging or extending a loan to customers not subject to Regulation T (12 CFR 220), in connection with the offer or sale of securities unless, before entering the transaction, the broker-dealer: (i) Delivers to the customer a written statement containing specific information concerning the terms, obligations, risks and charges of the loan; (ii) obtains from the customer sufficient financial information to determine that the entire transaction is suitable for the customer; and (iii) retains on file and makes available to the customer a written statement setting forth the broker-dealer's basis for determining that the transaction was suitable. The collection of information required by the Rule is necessary to execute the Commission's mandate under the Exchange Act to prevent fraudulent, manipulative, and deceptive acts and practices by broker-dealers.

There are approximately 50 respondents that require an aggregate total of 600 hours to comply with the Rule. Each of these approximately 50 registered broker-dealers makes an estimated 6 annual responses, for an aggregate total of 300 responses per year. Each response takes approximately 2 hours to complete. Thus, the total compliance burden per year is 600 burden hours. The approximate cost per hour is $25.00 (based on an annual salary of $52,000 for clerical labor), resulting in a total compliance cost of $15,000 (600 hours @ $25.00 per hour).

Written comments are invited on: (i) Whether the proposed collection of information is necessary for the proper performance of the functions of the agency, including whether the information shall have practical utility; (ii) the accuracy of the agency's estimates of the burden of the proposed collection of information; (iii) ways to enhance the quality, utility, and clarity of the information to be collected; and (iv) ways to minimize the burden of the

[1] 15 USC § 78a *et seq.*

[2] Respondents include temporarily registered clearing agencies. Respondents also may include clearing agencies granted exemptions from the registration requirements of Section 17A, conditioned upon compliance with Rule 17a–22.

collection of information on respondents, including through the use of automated collection techniques or other forms of information technology. Consideration will be given to comments and suggestions submitted in writing within 60 days of this publication.

Please direct your written comments to Michael E. Bartell, Associate Executive Director, Office of Information Technology, Securities and Exchange Commission, 450 5th Street, N.W., Washington, D.C. 20549.

Dated: May 3, 1999.

Margaret H. McFarland,

Deputy Secretary.

[FR Doc. 99–11811 Filed 5–10–99; 8:45 am]

BILLING CODE 8010–01–M

SECURITIES AND EXCHANGE COMMISSION

Proposed Collection; Comment Request

Upon Written Request, Copies Available From: Securities and Exchange Commission, Office of Filings and Information Services, Washington, DC 20549

Extension:

Rule 17Ac3–1(a) and Form TA–W, SEC File No. 270–96, OMB Control No. 3235–0151

Notice is hereby given that pursuant to the Paperwork Reduction Act of 1995 (44 U.S.C. 3501 *et seq.*) the Securities and Exchange Commission (''Commission'') is soliciting comments on the collection of information summarized below. The Commission plans to submit this existing collection of information to the Office of Management and Budget for extension and approval.

Subsection (c)(3)(C) of Section 17A of the Securities Exchange Act of 1934 (''Exchange Act'') authorizes transfer agents registered with an appropriate regulatory agency (''ARA'') to withdraw from registration by filing with the ARA a written notice of withdrawal and by agreeing to such terms and conditions are the ARA deems necessary or appropriate in the public interest, for the protection of investors, or in the furtherance of the purposes of Section 17A.

In order to implement Section 17A(c)(3)(C) of the Exchange Act the Commission, on September 1, 1977, promulgated Rule 17Ac3–1(a) and accompanying Form TA–W. Rule 17Ac3–1(a) provides that notice of withdrawal from registration as a transfer agent with the Commission shall be filed on Form TA–W. Form TA–W requires the withdrawing transfer agent to provide the Commission with certain information, including (1) The locations where transfer agent activities are or were performed; (2) the reasons for ceasing the performance of such activities; (3) disclosure of unsatisfied judgments or liens; and (4) information regarding successor transfer agents.

The Commission uses the information disclosed on Form TA–W to determine whether the registered transfer agent applying for withdrawal from registration as a transfer agent should be allowed to deregister and, if so, whether the Commission should attach to the granting of the application any terms or conditions necessary or appropriate in the public interest, for the protection of investors, or in furtherance of the purposes of Section 17A of the Exchange Act. Without Rule 17Ac3–1(a) and Form TA–W, transfer agents registered with the Commission would not have a means for voluntary deregistration when necessary or appropriate to do so.

Respondents file approximately thirty Form TA–Ws with the Commission annually. The filing of a Form TA–W occurs only once, when a transfer agent is seeking deregistration. In view of the ready availability of the information requested by Form TA–W, its short and simple presentation, and the Commission's experience with the Form, we estimate that approximately one half hour is required to complete Form TA–W, including clerical time. Thus, the total burden of fifteen hours of preparation for all transfer agents seeking deregistration in any one year is negligible.

The Commission estimates a cost of approximately $35 for each half hour required to complete a Form TA–W. Therefore, based upon a total of fifteen hours, transfer agents spend approximately $1,050 each year to complete thirty Form TA–Ws.

Written comments are invited on: (a) Whether the proposed collection of information is necessary for the proper performance of the functions of the agency, including whether the information will have practical utility; (b) the accuracy of the agency's estimate of the burden of the collection of information; (c) ways to enhance the quality, utility, and clarity of the information collected; and (d) ways to minimize the burden of the collection of information on respondents, including through the use of automated collection techniques or other forms of information technology. Consideration will be given to comments and suggestions submitted in writing within 60 days of this publication.

Please direct your written comments to Michael E. Bartell, Associate Executive Director, Office of Information Technology, Securities and Exchange Commission, 450 5th Street, NW, Washington, DC 20549.

Dated: April 29, 1999.

Margaret H. McFarland,

Deputy Secretary.

[FR Doc. 99–11812 Filed 5–10–99; 8:45 am]

BILLING CODE 8010–01–M

SECURITIES AND EXCHANGE COMMISSION

[Release No. 34–40379A; File No. SR–NASD–98–58]

Self-Regulatory Organizations; Notice of Filing of Proposed Rule Change by National Association of Securities Dealers, Inc. Relating to the Elimination of the Requirement for Personal Service of Decisions in Cases Involving Bars and Expulsions; Correction

May 4, 1999.

In notice document 98–23762, beginning on page 47058, in the issue of Thursday, September 3, 1998, make the following correction:

On page 47058, in the third column, the proposed new language to Rule 9269(d) is corrected to read as set forth below.

The Association shall serve the decision on a Respondent by overnight courier, facsimile or other means reasonably likely to obtain prompt service when the sanction is a bar or an expulsion.

For the Commission, by the Division of Market Regulation, pursuant to delegated authority.

Margaret H. McFarland,

Deputy Secretary.

[FR Doc. 99–11815 Filed 5–10–99; 8:45 am]

BILLING CODE 8010–01–M

SECURITIES AND EXCHANGE COMMISSION

[Release No. 34–41359; File No. SR–NYSE–98–41]

Self-regulatory Organizations; Notice of Filing of Proposed Rule Change and Amendment No. 1 to the Proposed Rule Change by the New York Stock Exchange, Inc. Amending Opening Imbalance Publication Procedures for Expiration Days

May 3, 1999.

Pursuant to Section 19(b)(1) of the Securities Exchange Act of 1934 (''Act''),[1] and Rule 19b-4 thereunder,[2] notice is hereby given that on November 25, 1998, the New York Stock Exchange, Inc. (''NYSE'' or ''Exchange'') filed with the Securities and Exchange Commission (''SEC'' or ''Commission'') the proposed rule change as described in Items I and II below, which Items have been prepared by the Exchange. On March 22, 1999, the Exchange filed Amendment No. 1 to the proposed rule change.[3] The Commission is publishing this notice to solicit comments on the proposed rule change from interested persons.

I. Self-Regulatory Organization's Statement of the Terms of Substance of the Proposed Rule Change

The proposed rule change consists of amendments to expiration day opening imbalance publication procedures. The text of the proposed rule change is available at the Office of the Secretary, the NYSE, and at the Commission.

II. Self-Regulatory Organization's Statement of the Purpose of, and Statutory Basis for, the Proposed Rule Change

In its filing with the Commission, the Exchange included statements concerning the purpose of, and basis for, the proposed rule change and discussed any comments it received on the proposed rule change. The text of these statements may be examined at the places specified in Item IV below. The Exchange has prepared summaries, set forth in Sections A, B, and C below, of the most significant aspects of such statements.

[1] 15 U.S.C. 78s(b)(10.

[2] 17 CFR 240.19b-4.

[3] Letter from Donald Siemer, Director, Market Surveillance, NYSE, to Richard Strasser, Assistant Director, Division of Market Regulation (''Division''), SEC, dated March 18, 1999 (''Amendment No. 1''). Amendment No. 1 clarified the Exchange's opening procedures for stocks underlying derivative index related products on expiration days.

A. Self-Regulatory Organization's Statement of the Purpose of, and Statutory Basis for, the Proposed Rule Change

1. Purpose

The Exchange currently has auxiliary opening procedures for expiration days.[4] These auxiliary procedures require, among other things, that market order imbalances of 50,000 shares or more in stocks on the Exchange's ''special stock'' list be published as soon as practicable after 9:00 a.m. on expiration days.[5] The special stock list consists of the 50 most highly capitalized stocks in the S&P 500 Stock Price Index, any stocks in the Major Market Index (XMI) that are not among the 50, and the 10 most highly capitalized stocks in the S&P 400 MidCap Index.[6]

The Exchange also required the use of the special stock list for imbalance publications at the close. In June 1998, however, the Exchange eliminated the use of special stock lists for publishing imbalances at the close and mandated that market-at-the-close (''MOC'') imbalances of 50,000 shares or more be published in *all* stocks on any trading day.[7] As part of these revisions, the exchange also added a provision permitting the publication of MOC imbalances of *less than* 50,000 shares, with the approval of a Floor Official. These changes were implemented as part of a group of revisions to MOC and LOC procedures recommended by a subcommittee of the Market Performance Committee which reviewed closing procedures.[8]

The Exchange believes it would also be appropriate to revise expiration day opening procedures by terminating the use of the special stock list and requiring order imbalance publication for all stocks with imbalances of 50,000 shares or more and to permit the publication of imbalances of less than 50,000 shares with Floor Official approval. The Exchange believes the proposed changes will provide more complete information to market participants. According to the Exchange, the increase of information should attract additional liquidity which could minimize volatility and lead to more orderly openings on expiration days.[9] All other aspects of expiration day opening procedures would remain the same, *e.g.*, publication of market order imbalances at 9:00 a.m. and requirements for identification of orders relating to expiring derivatives that settle on the opening.

The exchange intends to issue an Information Memo to inform its members of the revised expiration day opening procedures.

2. Statutory Basis

The Exchange believes the basis under the Act for the proposed rule change is the requirement under Section 6(b)(5)[10] that an Exchange have rules that are designed to promote just and equitable principles of trade, to remove impediments to, and perfect the mechanism of a free and open market and, in general, to protect investors and the public interest.

B. Self-Regulatory Organization's Statement on Burden on Competition

The Exchange does not believe that the proposed rule change will impose any burden on competition that is not necessary or appropriate in furtherance of the purposes of the Act.

C. Self-Regulatory Organization's Statement on Comments on the Proposed Rule Change Received From Members, Participants or Others

The Exchange has neither solicited nor received written comments on the proposed rule change.

[4] Modified opening procedures were first used on a pilot basis for the quarterly expiration on June 19, 1987, *See* Securities Exchange Act Release No. 24596 (June 16, 1987), 52 FR 23618 (June 23, 1987)(File No. SR–NYSE–87–17). They were approved permanently in Securities Exchange Act Release No. 25804 (June 15, 1988), 53 FR 23474 (June 22, 1988)(File Nos. SR–NYSE–87–11 and SR–NYSE–88–04).

[5] Other procedures include: 1. a 9:00 a.m. deadline for the entry of orders relating to expiring derivatives for which the settlement pricing is based on the opening prices of the underlying securities; 2. the use of the identifier ''OPG'' to identify such orders (firms unable to use the ''OPG'' identifier through SuperDOT must identify such orders by other means and inform Market Surveillance in writing by the business day following the expiration trade date); and 3. the publication of a ''no imbalance'' status for each stock on the special stock list for which there is no market order imbalance. *See* Securities Exchange Act Release No. 37894 (October 30, 1996), 61 FR 56987 (November 5, 1996)(File No. SR–NYSE–96–31) and NYSE Information Memo No. 96–34 (November 8, 1996).

[6] *See* Securities Exchange Act Release No. 31732 (January 14, 1993), 58 FR 6036 (January 25, 1993)(File No. SR–NYSE–92–38).

[7] *See* Securities Exchange Act Release No. 40094 (June 15, 1998), 63 FR 38230 (July 15, 1998)(File No. SR–NYSE–97–36) and NYSE Information Memo No. 98–20 (June 22, 1998).

[8] *Id.*

[9] Letter from Donald Siemer, Director, Market Surveillance, NYSE to Richard Strasser, Assistant Director, Division, SEC, dated March 31, 1999. This letter clarified the Exchange's purpose for the proposed rule change.

[10] 15 U.S.C. 78f(b)(5).

III. Date of Effectiveness of the Proposed Rule Change and Timing for Commission Action

Within 35 days of the date of publication of this notice in the **Federal Register** or within such longer period (i) as the Commission may designate up to 90 days of such date if it finds such longer period to be appropriate and publishes its reasons for so finding or (ii) as to which the self-regulatory organization consents, the Commission will:

A. By order approve the proposed rule change, or

B. Institute proceedings to determine whether the proposed rule change should be disapproved.

IV. Solicitation of Comments

Interested persons are invited to submit written data, views and arguments concerning the foregoing, including whether the proposed rule change is consistent with the Act. Persons making written submissions should file six copies thereof with the Secretary, Securities and Exchange Commission, 450 Fifth Street NW., Washington, DC 20549–0609. Copies of the submission, all subsequent amendments, all written statements with respect to the proposed rule change that are filed with the Commission, and all written communications relating to the proposed rule change between the Commission and any person, other than those that may be withheld from the public in accordance with the provisions of 5 U.S.C. 552, will be available for inspection and copying in the Commission's Public Reference Room. Copies of such filing will also be available for inspection and copying at the principal office of the NYSE. All submissions should refer to File No. SR–NYSE–98–41 and should be submitted by June 1, 1999.

For the Commission, by the Division of Market Regulation, pursuant to delegated authority.[11]

Margaret H. McFarland,

Deputy Secretary.

[FR Doc. 99–11813 Filed 5–10–99; 8:45 am]

BILLING CODE 8010–01–M

[11] 17 CFR 200.30–3(a)(12).

SECURITIES AND EXCHANGE COMMISSION

[Release No. 34–41361; File No. SR–Phlx–99–08]

Self-Regulatory Organizations; Notice of Filing and Immediate Effectiveness of Proposed Rule Change by the Philadelphia Stock Exchange, Inc., Establishing a $200 Registration Fee and a $200 Annual fee for Off-Floor Traders for which the Exchange is the Designated Examining Authority

May 3, 1999.

Pursuant to section 19(b)(1) of the Securities Exchange Act of 1934 (''Act''),[1] and Rule 19b–4 thereunder,[2] notice is hereby given that on April 22, 1999, the Philadelphia Stock Exchange, Inc. (''Phix'' or ''Exchange''), filed with the Securities and Exchange Commission (''SEC'' or ''Commission'') the proposed rule change as described in Items I, II, and III below, which Items have been prepared by the Exchange. The Commission is publishing this notice to solicit comments on the proposed rule change from interested persons.

I. Self-Regulatory Organization's Statement of the Terms of Substance of the Proposed Rule Change

The Exchange proposes to amend its schedule of dues, fees, and charges to require all current and future off-floor traders to pay an initial $200 registration fee and an annual fee of $200 for all off-floor traders registered as of April 1 of each year. The fees would apply to all associated persons of member organizations for which the Exchange is the designated examining authority (''DEA''), but who are not themselves Exchange members, who engage in proprietary trading of equities and options, including, but not limited to, persons who execute such trades or make trading decisions with respect to such trades. The proposed rule would apply to those persons who are not Exchange members registered in a trading capacity on the floor of the Exchange.

II. Self-Regulatory Organization's Statement of the Purpose of, and Statutory Basis for, the Proposed Rule Change

In its filing with the Commission, the Exchange included statements concerning the purpose of and basis for the proposed rule change and discussed any comments it received on the proposed rule change. The text of these statements may be examined at the places specified in Item IV below. The Exchange has prepared summaries, set forth in sections A, B, and C below, of the most significant aspects of such statements.

A. Self-Regulatory Organization's Statement of the Purpose of, and Statutory Basis for, the Proposed Rule Change

1. Purpose

Currently, persons who are associated with member organizations for which the Exchange is the DEA, but who are not themselves Exchange members, who engage in proprietary trading of equities and options from off the floor of the Exchange, are required under Rule 604 to register with the Exchange by filing a Form U–4 and a fingerprint card.[3] Separately, the Exchange has filed a proposed rule change to impose a Series 7 testing requirement on such traders.[4] At this time, the Exchange proposes that such traders pay an initial registration fee of $200. This initial registration fee applies to persons currently trading from off the floor and to persons who register to trade from off the floor in the future. The payment of the $200 initial registration fee will be a prerequisite to engaging in trading from off the floor of the Exchange. Secondly, all such persons who are registered with the Exchange as of April 1 of each year will be assessed an annual fee of $200.

The fees are proposed in recognition of the increased costs of administration that the Exchange has been and will be incurring. Specifically, the Exchange anticipates increased administration costs to be incurred in conducting background checks on the individuals to whom the rule applies; processing of forms; fingerprint charges; requests for disciplinary history of all current and future off-floor traders to the Central Registration Depository; and conducting on-site examinations of the main and branch offices of the various member firms with which off-floor traders associate.

2. Statutory Basis

The Exchange believes the proposed rule change is consistent with section 6 of the Act,[5] in general, and with section 6(b)(4),[6] in particular, in that it provides for the equitable allocation of reasonable

[1] 15 U.S.C. 78s(b)(1).

[2] CFR 240.19b–4.

[3] *See* Securities Exchange Act Release No. 36395 (October 20, 1995), 60 FR 54904 (October 26, 1995) (File No. SR-Phlx–95–58) (order approving amendment of Phlx Rule 604).

[4] *See* Securities Exchange Act Release No. 41306 (April 16, 1999), 64 FR 22665 (April 27, 1999) (File No. SR–Phlx–99–07).

[5] 15 U.S.C. 78f.

[6] 15 U.S.C. 78f(b)(4).

dues, fees, and other charges among its members and other persons using its facilities.

B. Self-Regulatory Organization's Statement on Burden on Competition

The Exchange does not believe that the proposed rule change will impose any inappropriate burden on competition.

C. Self-Regulatory Organization's Statement on Comments on the Proposed Rule Change Received From Members, Participants, or Others

No written comments were either solicited or received.

III. Date of Effectiveness of the Proposed Rule Change and Timing for Commission Action

The foregoing rule change has become effective pursuant to Section 19(b)(3)(A) of the Act[7] and subparagraph (f) of Rule 19b-4 thereunder[8] because it establishes or changes a due, fee, or other charge. At any time within 60 days of the filing of the proposed rule change, the Commission may summarily abrogate such rule change if it appears to the Commission that such action is necessary or appropriate in the public interest, for the protection of investors, or otherwise in furtherance of the purposes of the Act.

IV. Solicitation of Comments

Interested persons are invited to submit written data, views, and arguments concerning the foregoing, including whether the proposed rule change is consistent with the Act.[9] Persons making written submissions should file six copies thereof with the Secretary, Securities and Exchange Commission, 450 Fifth Street, NW, Washington, DC 20540–0609. Copies of the submission, all subsequent amendments, all written statements with respect to the proposed rule change that are filed with the Commission, and all written communications relating to the proposed rule change between the Commission and any person, other than those that may be withheld from the public in accordance with the provisions of 5 U.S.C. 552, will be available for inspection and copying in the Commission's Public Reference Room. Copies of such filings also will be available for inspection and copying at the principal office of the the Exchange. All submissions should refer to File No. SR–Phlx–99–08 and should be submitted by June 1, 1999.

For the Commission, by the Division of Market Regulation, pursuant to delegated authority.[10]

Margaret H. McFarland,

Deputy Secretary.

[FR Doc. 99–11814 Filed 5–10–99; 8:45 am]

BILLING CODE 8010–01–M

[7] 15 U.S.C. 78s(b)(3)(A),

[8] 17 CFR 240.19b-4(f)(2).

[9] In reviewing the proposed rule change, the Commission considered its potential impact on efficiency, competition, and capital formation. 15 U.S.C. 78c(f).

[10] 17 CFR 200.30–3(a)(12).

DEPARTMENT OF STATE

M/OPAP; Public Notice 3047

AGENCY: Department of State.

ACTION: Notice of Information Collection Under Emergency Review: Presence Customer Satisfaction Survey.

SUMMARY: The Department of State has submitted the following information collection request to the Office of Management and Budget (OMB) for review and approval in accordance with the emergency review procedures of the Paperwork Reduction Act of 1995.

Type of Request: Public Survey Request.

Originating Office: M/OPAP.

Title of Information Collection: U.S. Presence Customer Survey.

Frequency: Once.

Form Number: n/a.

Respondents: Select people from media, NOG, private companies and government agencies with representation abroad.

Estimated Number of Respondents: 350.

Average Hours Per Response: .17 an hour (10 min).

Total Estimated Burden: n/a.

The proposed information collection is published to obtain comments from the public and affected agencies. Emergency review and approval of this collection has been requested from OMB by May 7,1999. If granted, the emergency approval is only valid for 180 days. Comments should be directed to the State Department Desk Officer, Office of Information and Regulatory Affairs, Office of Management and Budget (OMB), Washington, DC 20530, (202) 395–5871.

During the first 60 days of this same period a regular review of this information collection is also being undertaken. Comments are encouraged and will be accepted until July 5, 1999. The agency requests written comments and suggestions from the public and affected agencies concerning the proposed collection of information. Your comments are being solicited to permit the agency to:

- Evaluate whether the proposed collection of information is necessary for the proper performance of the functions of the agency, including whether the information will have practical utility.
- Evaluate the accuracy of the agency's estimate of the burden of the proposed collection, including the validity of the methodology and assumptions used.
- Enhance the quality, utility, and clarity of the information to be collected.
- Minimize the reporting burden on those who are to respond, including through the use of automated collection techniques or other forms of technology.

FOR ADDITIONAL INFORMATION: Public comments, or requests for additional information, regarding the collection listed in this notice should be directed to Gregory Davis at the U.S. Department of State, Washington, DC 20520, 202–647–4085.

Dated: May 5, 1999.

Donald S. Hays,

Management Policy and Planning, Director.

[FR Doc. 99–11863 Filed 5–10–99; 8:45 am]

BILLING CODE 4710–10–P

DEPARTMENT OF STATE

[Public Notice 3046]

Office of Defense Trade Contols; Statutory Debarment Under the International Traffic in Arms Regulations

AGENCY: Department of State.

ACTION: Notice.

SUMMARY: Notice is hereby given that the Department of State has imposed statutory debarment pursuant to § 127.7(c) of the International Traffic in Arms Regulations (ITAR) (22 CFR parts 120–130) on persons convicted of violating or conspiring to violate section 38 of the Arms Export Control Act (AECA) (22 U.S.C. 2778).

EFFECTIVE DATE: Date of conviction as specified for each person.

FOR FURTHER INFORMATION CONTACT: Philip S. Rhoads, Chief, Compliance and Enforcement Branch, Office of Defense Trade Controls, Department of State (703–875–6644).

SUPPLEMENTARY INFORMATION: Section 38(g)(4) of the AECA prohibits licenses and other approvals for the export of defense articles and the furnishing of defense services to be issued to a person, or any party to the export, convicted of violating or conspiring to violate the AECA. Pursuant to § 127.7(c)

of the ITAR, statutory debarment is imposed upon persons convicted of violating or conspiring to violate the AECA. Statutory debarment is based solely upon a conviction in a criminal proceeding, conducted by a United States court, and as such the administrative proceedings outlined in part 128 of the ITAR are not applicable.

This notice is provided in order to make the public aware that the persons listed below are prohibited from participating directly or indirectly in any brokering activities and in any export from or temporary import into the United States of defense articles, related technical data, or defense services in all situations covered by the ITAR (name/offense/date/court):

1. Robert Cassidy, 18 U.S.C. 371 (Conspiracy to violate 22 U.S.C. 2778), 09/23/98, Eastern District of Virginia, Docket No: 2;98 CR–60.
2. George K. Cheng, 22 U.S.C. 2778, July 17, 1998, District of Oregon, Docket No: 97–CR–412–ALL.
3. Robert S. Fairchild, 22 U.S.C. 2778, March 12, 1999, Southern District of Florida, Docket No: 97–CR–6104–1.
4. Donn R. Proven, 22 U.S.C. 2778, March 8, 1999, Southern District of Florida, Docket No: 97–6104–CR.
5. Parviz Lavi, 18 U.S.C.371 (Conspiracy to violate 22 U.S.C. 2778), July 13, 1998, Eastern District of Virginia, Docket No: 2;98 CR–60.

Specific case information may be obtained from the Office of the Clerk for each respective U.S. District Court, citing the court docket number where provided.

This notice involves a foreign affairs function of the United States encompassed within the meaning of the military and foreign affairs exclusion of the Administrative Procedure Act. Because the exercise of this foreign affairs function is discretionary, it is excluded from review under the Administrative Procedure Act.

Dated: April 18, 1999.

William J. Lowell,

Director, Office of Defense Trade Controls, Bureau of Political-Military Affairs, Department of State.

[FR Doc. 99–11862 Filed 5–10–99; 8:45 am]

BILLING CODE 4710–25–P

DEPARTMENT OF TRANSPORTATION

Office of the Secretary

Aviation Proceedings, Agreements Filed During the Week Ending April 30, 1999

The following Agreements were filed with the Department of Transportation under the provisions of 49 U.S.C. sections 412 and 414. Answers may be filed within 21 days of date of filing.

Docket Number: OST–99–5608
Date Filed: April 29, 1999
Parties: Members of the International Air Transport Association
Subject:
PTC3 0331 dated 30 April 1999
Mail Vote 999 Resolution 010f
TC3 Special Passenger Amending Resolution Within SWP
Fares between Australia and Papua New Guinea; from
Solomon Islands to Papua New Guinea
Intended effective date: 12 May 1999.

Dorothy W. Walker,

Federal Register Liaison.

[FR Doc. 99–11787 Filed 5–10–99; 8:45 am]

BILLING CODE 4910–62–P

DEPARTMENT OF TRANSPORTATION

Office of the Secretary

Notice of Applications for Certificates of Public Convenience and Necessity and Foreign Air Carrier Permits Filed Under Subpart Q During the Week Ending April 30, 1999

The following Applications for Certificates of Public Convenience and Necessity and Foreign Air Carrier Permits were filed under subpart Q of the Department of Transportation's Procedural Regulations (See 14 CFR 302.1701 et. seq.). The due date for Answers, Conforming Applications, or Motions to Modify Scope are set forth below for each application. Following the Answer period DOT may process the application by expedited procedures. Such procedures may consist of the adoption of a show-cause order, a tentative order, or in appropriate cases a final order without further proceedings.

Docket Number: OST–99–5605.
Date Filed: April 29, 1999.
Due Date for Answers, Conforming Applications, or Motions to Modify Scope: May 27, 1999.
Description: Application of East Line Airlines pursuant to 49 U.S.C. section 41302 and subpart Q, applies for a foreign air carrier permit to engage in all-cargo and combination charter service between the Russian Federation and the United States.

Docket Number: OST–99–5616.
Date Filed: April 30, 1999.
Due Date for Answers, Conforming Applications, or Motions to Modify Scope: May 28, 1999.
Description: Application of New Air Corporation pursuant to 49 U.S.C. section 41102 and subpart Q, applies for a certificate of public convenience and necessity to engage in interstate scheduled air transportation of persons, property and mail to commence scheduled service in the winter of 1999–2000; between any point in any State of the United States or the District of Columbia, or any territory or possession of the United States, and any other point in any State of the United States or the District of Columbia, or any territory or possession of the United States.

Dorothy W. Walker,

Federal Register Liaison.

[FR Doc. 99–11786 Filed 5–10–99; 8:45 am]

BILLING CODE 4910–62–P

DEPARTMENT OF TRANSPORTATION

Federal Aviation Administration

Advisory Circular (AC) No. 00–59, Integrating Helicopter and Tiltrotor Assets into Disaster Relief Planning

AGENCY: Federal Aviation Administration, DOT.

ACTION: Notice of availability of an advisory circular.

SUMMARY: This notice announces the availability of an AC that provides general guidance on integrating helicopters and tiltrotor aircraft into disaster relief planning efforts. This document is advisory in nature and is intended to provide a planning tool to assist State and local emergency planners. These guidelines are based on accepted planning concepts and ''lessons learned'' through the study of disaster case histories where helicopters were used.

During the last four decades, helicopters have proven their value to communities when disasters strike. And yet, all too often, people simply assume that these aircraft will arrive when needed. However, without careful planning, helicopters and tiltrotors may not appear, or if they do, they may not be used to their best advantage. This AC identifies issues that need to be addressed, provides general guidance on how they may be addressed, and lists various contacts and references that may be helpful during the planning and execution of disaster relief plans.

ADDRESSES: You can find this document on the Internet at either of the following addresses: http://www.faa.gov/and/andhome.htm (click on Advisory Circulars). http://www.faa.gov/and/circulars.htm (look for AC 00–59).

To obtain a paper copy of this document, write to U.S. Department of Transportation, Subsequent Distribution Office, SVC–121.23, Ardmore East Business Center, 3341 Q 75th Avenue, Landover MD 20785 or FAX your order to (301) 386–5394. The Help Line telephone number is (301) 322–4961. In ordering the AC, please provide your name and full mailing address.

FOR FURTHER INFORMATION CONTACT: Technical questions should be addressed to Robert D. Smith, General Aviation and Vertical Flight Program Office (AND–710), Federal Aviation Administration, 800 Independence Avenue SW, Washington DC 20591, telephone (202) 493–4691.

Issued in Washington DC on May 5, 1999.

Steve Fisher,

Manager, General Aviation and Vertical Flight Program Office.

[FR Doc. 99–11874 Filed 5–10–99; 8:45 am]

BILLING CODE 4910–13–M

DEPARTMENT OF TRANSPORTATION

Federal Aviation Administration

Notice of Charter Renewal, RTCA, Inc. (utilized as an advisory committee)

SUMMARY: Notice is hereby given of the renewal of the charter for RTCA, Inc. (utilized as an advisory committee) for 2 years, effective March 13, 1999. The Administrator is the sponsor of the committee. The objective of the advisory committee is to seek solutions to problems involving the application of technology (e.g., electronics, computers, and telecommunications) to aeronautical operations that impact the future air traffic management system. The solutions are frequently in the nature of recommended minimum operational performance standards and technical guidance documents that are acceptable to Government, industry, and users. Standards ensure equivalent performance of the same generic equipment built by different manufacturers. RTCA Standards are generally reference or used (with or without modification) in Government regulatory and procurement activities.

The Secretary of Transportation has determined that the information and use of the committee are necessary in the public interest in connection with the performance of duties imposed on the FAA by law. Meetings of the committee will by open to the public except as authorized by Section 10(d) of the Federal Advisory Committee Act.

FOR FURTHER INFORMATION CONTACT: Janice Peters, Office of System Architecture and Investment Analysis (ASD–3), 800 Independence Avenue, SW., Washington, DC 20591, Telephone: 202/358–5243.

Issued in Washington, DC, on May 6, 1999.

Janice L. Peters,

Designated Official.

[FR Doc 99–11872 Filed 5–10–99; 8:45 am]

BILLING CODE 4910–13–M

DEPARTMENT OF TRANSPORTATION

Federal Aviation Administration

RTCA Special Committee 188; Minimum Aviation System Performance Standards for High Frequency Data Link

Pursuant to section 10(A) (2) of the Federal Advisory Committee Act (P.L. 92–463, 5 U.S.C., Appendix 2), notice is hereby given for Special Committee 188 meeting to be held May 24–27, 1999, starting at 9:00 a.m. each day. The meeting will be held at RTCA, 1140 Connecticut Avenue, NW., Suite 1020, Washington, DC, 20036.

The agenda will include: May 24–25, (1) Working Group 2, Minimum Operational Performance Standards; May 25–26, (2) WG–1, Minimum Aviation System Performance Standards (starting at 1:00 p.m. on May 25); May 27, Plenary Session: (3) Review summary of February 1999 Meeting; (4) Review of WG–1 status; (5) Review of WG–2 status; (6) Review activities of other Standards Groups; (7) Open Discussion; (8) Confirm dates for future meetings; (9) Closing.

Attendance is open to the interested public but limited to space availability. With the approval of the chairman, members of the public may present oral statements at the meeting. Persons wishing to present statements or obtain information should contact the RTCA Secretariat, 1140 Connecticut Avenue, NW., Suite 1020, Washington, DC, 20036; (202) 833–9339 (phone); (202) 833–9434 (fax); or http://www.rtca.org (web site). Members of the public may present a written statement to the committee at any time.

Issued in Washington, DC, on April 28, 1999.

Janice L. Peters,

Designated Official.

[FR Doc. 99–11873 Filed 5–10–99; 8:45 am]

BILLING CODE 4910–13–M

DEPARTMENT OF TRANSPORTATION

Maritime Administration

[DOCKET NO. MARAD–99–5661]

Information Collection Available for Public Comments and Recommendations

ACTION: Notice and request for comments.

SUMMARY: In accordance with the Paperwork Reduction Act of 1995, this notice announces the Maritime Administration's (MARAD's) intentions to request extension of approval for three years of a currently approved information collection.

DATES: Comments should be submitted on or before July 12, 1999.

FOR FURTHER INFORMATION CONTACT: William W. Dean, Office of Ports and Domestic Shipping, Maritime Administration, 400 7th Street, S.W., Room 7201, Washington, D.C. 20590 telephone 202-366–5477 and FAX 202–366–6988.

Copies of this collection can also be obtained from that office.

SUPPLEMENTARY INFORMATION:

Title of Collection: Port Facilities Inventory.

Type of Request: Extension of currently approved information collection.

OMB Control Number: 2133–0023.

Form Numbers: MA–400

Expiration Date of Approval: January 31, 2000.

Summary of Collection of Information: The collection of port facility data from terminal owners allows MARAD to maintain information, at the proper level of accuracy and currency, on those essential port facilities that are required for emergency use. The surveys would be used only in the event the data contained on these facilities fell below a level of currency deemed adequate for emergency planning purposes.

Need and Use of the Information: This information collection is necessary to fulfill the agency's responsibilities contained in Executive Order 12656 (emergency preparedness functions) relating to emergency utilization and control of U.S. port facilities during national emergencies.

Description of Respondents: Port terminal owners.

Annual Responses: 40.

Annual Burden: 40 hours.

Comments: Signed written comments should refer to the docket number that appears at the top of this document and must be submitted to the Docket Clerk,

U.S. DOT Dockets, Room PL–401, 400 7th Street, SW, Washington, D.C. 20590. Specifically, address whether this information collection is necessary for proper performance of the function of the agency and will have practical utility, accuracy of the burden estimates, ways to minimize this burden and ways to enhance quality, utility, and clarity of the information to be collected. All comments received will be available for examination at the above address between 10 a.m. and 5 p.m., EST., Monday through Friday, except Federal Holidays. An electronic version of this document is available on the World Wide Web at *http://dms.dot.gov*.

By order of the Maritime Administrator.

Dated: May 6, 1999.

Joel C. Richard,

Secretary.

[FR Doc. 99–11861 Filed 5–10–99; 8:45 am]

BILLING CODE 4910–81–P

DEPARTMENT OF TRANSPORTATION

National Highway Traffic Safety Administration

Safety Performance Standards Program Meeting

AGENCY: National Highway Traffic Safety Administration.

ACTION: Notice of NHTSA Rulemaking Status Meeting.

SUMMARY: This notice announces a public meeting at which NHTSA will answer questions from the public and the automobile industry regarding the agency's vehicle regulatory program.

DATES: The Agency's regular, quarterly public meeting relating to its vehicle regulatory program will be held on Wednesday, June 16, 1999, beginning at 9:45 a.m. and ending at approximately 12:00 p.m., at the Clarion Hotel, Romulus, MI. Questions relating to the vehicle regulatory program must be submitted in writing with a diskette (Wordperfect) by Friday, May 28, 1999, to the address shown below or by e-mail. If sufficient time is available, questions received after May 28 may be answered at the meeting. The individual, group or company submitting a question(s) does not have to be present for the question(s) to be answered. A consolidated list of the questions submitted by May 28, 1999, and the issues to be discussed, will be posted on NHTSA's web site (www.nhtsa.dot.gov) by Monday, June 11, 1999, and also will be available at the meeting. The next NHTSA vehicle regulatory program meeting will take place in Washington on Thursday, September 16, 1999. The location of the September meeting will be announced in a subsequent notice.

ADDRESSES: Questions for the June 16, NHTSA Rulemaking Status Meeting, relating to the agency's vehicle regulatory program, should be submitted to Delia Lopez, NPS–01, National Highway Traffic Safety Administration, Room 5401, 400 Seventh Street, SW, Washington, DC 20590, Fax Number 202–366–4329, e-mail dlopez@nhtsa.dot.gov. The meeting will be held at the Clarion Hotel, 9191 Wickham Road, Romulus, MI.

FOR FURTHER INFORMATION CONTACT: Delia Lopez, (202) 366–1810.

SUPPLEMENTARY INFORMATION: NHTSA holds a regular, quarterly meeting to answer questions from the public and the regulated industries regarding the agency's vehicle regulatory program. Questions on aspects of the agency's research and development activities that relate directly to ongoing regulatory actions should be submitted, as in the past, to the agency's Safety Performance Standards Office. The purpose of this meeting is to focus on those phases of NHTSA activities which are technical, interpretative or procedural in nature. Transcripts of these meetings will be available for public inspection in the DOT Docket in Washington, DC, within four weeks after the meeting. Copies of the transcript will then be available at ten cents a page, (length has varied from 80 to 150 pages) upon request to DOT Docket, Room PL–401, 400 Seventh Street, SW, Washington, DC 20590. The DOT Docket is open to the public from 10:00 a.m. to 5:00 p.m. The transcript may also accessed electronically at http://dms.dot.gov. at docket NHTSA–1999–5087. Questions to be answered at the quarterly meeting should be organized by categories to help us process the questions into an agenda form more efficiently. Sample format:

I. Rulemaking
  A. Crash avoidance
  B. Crashworthiness
  C. Other Rulemakings
II. Consumer Information
III. Miscellaneous

NHTSA will provide auxiliary aids to participants as necessary. Any person desiring assistance of ''auxiliary aids'' (e.g., sign-language interpreter, telecommunications devices for deaf persons (TDDs), readers, taped texts, brailled materials, or large print materials and/or a magnifying device), please contact Delia Lopez on (202) 366–1810, by COB June 11, 1999.

Issued: May 6, 1999.

L. Robert Shelton,

Associate Administrator for Safety Performance Standards.

[FR Doc. 99–11789 Filed 5–10–99; 8:45 am]

BILLING CODE 4910–59–M

DEPARTMENT OF TRANSPORTATION

National Highway Traffic Safety Administration

[Docket No. NHTSA–99–5403]

Notice of Receipt of Petition for Decision That Nonconforming 1998 and 1999 Lexus RX300 Multi-Purpose Passenger Vehicles Are Eligible for Importation; Correction

AGENCY: National Highway Traffic Safety Administration (NHTSA), DOT.

ACTION: Correction to notice of receipt of petition for decision that nonconforming 1998 and 1999 Lexus RX300 multi-purpose passenger vehicles (MPVs) are eligible for importation.

SUMMARY: This document corrects a notice published, April 19, 1999 (64 FR 19212) announcing receipt by NHTSA of a petition for a decision that 1998 and 1999 Lexus RX300 MPVs that were not originally manufactured to comply with all applicable Federal motor vehicle safety standards are eligible for importation into the United States. The notice incorrectly identified the docket number for this petition as ''Docket No. NHTSA–99–5403.'' The docket number should have been properly identified as ''Docket No. NHTSA–99–5503.'' Those intending to comment on the petition should ensure that they reference the correct docket number in their comments.

Authority: 49 U.S.C. 30141(a)(1)(B) and (b)(1); 49 CFR 593.8; delegations of authority at 49 CFR 1.50 and 501.8.

Issued on May 6, 1999.

Marilynne Jacobs,

Director, Office of Vehicle Safety Compliance.

[FR Doc. 99–11788 Filed 5–10–99; 8:45 am]

BILLING CODE 4910–59–M

DEPARTMENT OF TRANSPORTATION

Surface Transportation Board

[STB Finance Docket No. 33685]

Coach USA, Inc.—Petition for Exemption—Intra-Corporate Family Merger and Consolidation Transactions

AGENCY: Surface Transportation Board, DOT.

ACTION: Request for comments.

SUMMARY: The Surface Transportation Board (Board) is seeking comments on a petition by Coach USA, Inc. (Coach) to be exempted from 49 U.S.C. 14303 and the regulations at 49 CFR part 1182 concerning the merger or consolidation of motor carriers of passengers controlled by Coach.

DATES: Comments are due on June 10, 1999.

FOR FURTHER INFORMATION CONTACT: Beryl Gordon, (202) 565–1600. [TDD for the hearing impaired: (202) 565–1695.]

SUPPLEMENTARY INFORMATION: Coach has filed a petition for exemption requesting that it be exempted from the prior approval requirements of section 14303 for mergers or consolidations of motor carriers of passengers Coach already controls. Under its proposal, Coach would file a notice similar to the one applicable for class exemptions for railroad intra-corporate family transactions that do not result in significant operational changes, adverse changes in service levels, or a change in the competitive balance with carriers outside the corporate family. *See* 49 CFR 1180.2(d)(3) and 1180.4(g).

When the petition was filed, Coach, a noncarrier holding company, stated that it controlled, inter alia, 73 motor carriers of passengers subject to federal regulation (Operating Carriers). Coach states its plans to transfer direct control of the Operating Carriers to several new, wholly owned, primarily regionally-based subsidiaries (Management Companies), which would manage closely the Operating Carriers assigned to them.[1] As relevant here, each Management Company evidently would examine the Operating Carriers it controls to determine whether consolidations, mergers or other intra-family corporate transactions involving these carriers are warranted.

Coach asserts that there are currently two procedures available for seeking Board approval for mergers/consolidations. First, Coach can file an application under 49 CFR part 1182 for merger authority. Under this procedure, an accepted application will be published in the **Federal Register** within 30 days of filing as a tentative grant of authority, with comments due within 45 days.[2] If no adverse comments are timely filed, the tentative grant becomes effective automatically. If opposing comments are filed, the applicant can reply within 60 days of the filing of the application. The Board will then determine whether to issue a decision on the record developed or to receive more evidence before issuing a decision.[3]

In the alternative, a party can file a petition for exemption under 49 U.S.C. 13541 seeking an individual exemption from the prior approval requirements of 49 U.S.C. 14303 for the merger or consolidation. Coach argues that these proceedings take 3 or 4 months from the filing of the petition to complete. We have indicated that we would normally process exemptions as we do applications: we would publish the exemption request within 30 days of filing, and, after the comment period had expired, we would issue a decision on the merits of the petition. *See Revision to Regulations Governing Finance Applications Involving Motor Passenger Carriers,* STB Ex Parte No. 559 (STB served July 8, 1997) at 6.[4]

Coach contends that, under present procedures, it takes a minimum of two and one half months to be approved or exempted: ''During this hiatus, the transaction could not be consummated and the benefits that would have accrued from the merger or consolidation would not be available to the traveling public or the merged/consolidated entity.'' Petition at 2.

Coach proposes that the exemption for Coach intra-corporate family transactions would be similar to the rail exemption for intra-corporate family transactions. Coach and/or one of its subsidiaries would file a verified notice of exemption with the Board for the merger or consolidation of at least two Coach-controlled carriers, which could be consummated no sooner than 7 days after the filing of the notice. Included in the notice would be a summary of the transaction and the purpose of the transaction, of any contracts being entered into concerning the transaction, and of the effects, if any, on employees. A copy of the notice would be sent simultaneously to the Federal Highway Administration (FHWA)[5] and, when the carriers provide intrastate service, to the applicable state regulatory body. Coach proposes that the Board would publish the notice of exemption in the **Federal Register** within 30 days of filing. Coach also proposes that, if the notice contains false or misleading information that is brought to our attention, we could revoke the exemption and order divestiture. Coach also submits that petitions for revocation could be filed at any time pursuant to 49 U.S.C. 13541(d).[6]

Coach notes that, under 49 U.S.C. 13541(a), the Board must exempt a transaction or service from regulation when we find that: (1) Regulation is not necessary to carry out the transportation policy of 49 U.S.C. 13101; (2) either (a) regulation is not necessary to protect shippers from the abuse of market power, or (b) the transaction or service is of limited scope; and (3) exemption is in the public interest.

Transportation Policy. Coach claims that the operational and efficiency advantages of its intra-corporate merger/consolidation transactions will further the transportation policy goals of 49 U.S.C. 13101(a)(2). The benefits of these transactions ''include consolidated management, streamlined operational procedures, elimination of redundancies and better coordinated planning, safety and other management services that will enable the companies to operate more economically and efficiently * * *'' *Id.* at 10. Coach also maintains that granting an exemption will produce expeditious decisions, enhancing the efficiency of regulation, and is thus consistent with 49 U.S.C. 13101(a)(2)(B).

Abuse of Market Power. Coach argues that there will be no risk of an abuse of market power from the intra-corporate family transactions, because they will not reduce competition: ''None of the Operating Carriers today competes to any significant degree, if at all, with any of the other Operating Carriers.'' *Id.* at

[1] Tentative approval has been given to these applications. *See Coach USA, Inc., and Coach USA North Central, Inc.—Control—Nine Motor Passenger Carriers,* STB Docket No. MC-F–20931; *Coach USA, Inc., and Coach USA Northeast, Inc.—Control—30 Motor Passenger Carriers,* STB Docket No. MC-F–20932; *Coach USA, Inc., and Coach USA South Central, Inc.—Control—Eight Motor Passenger Carriers,* STB Docket No. MC-F–20933; *Coach USA, Inc., and Coach USA Southeast, Inc.—Control—Seven Motor Passenger Carriers,* STB Docket No. MC-F–20934; *Coach USA, Inc., and Coach USA West, Inc.—Control—14 Motor Passenger Carriers* STB Docket No. MC-F–20935; *Coach USA, Inc., and Yellow Cab Service Corporation—Control—Four Motor Passenger Carriers,* STB Docket No. MC-F–20936 (STB served Nov. 19, 1998); and *Coach USA, Inc. and Coach Canada, Inc.—Control and Continuance in Control—Autocar Connaisseur, Inc., Erie Coach Lines Company, and Trentway-Wagar, Inc.,* STB Docket No. MC-F-20938 (STB served Dec. 17, 1998).

[2] A tentative grant does not give the applicant the right to consummate the transaction before the end of the comment period. 49 CFR 1182.5(a).

[3] Under the statute, evidentiary proceedings are to be concluded within 240 days of publication of the application. The Board must issue a decision within 180 days after the close of the evidence. Time periods may be extended, in total, for up to 90 days. 49 U.S.C. 14303(e).

[4] This option is made possible by the ICC Termination Act of 1995, Pub. L. 104–88, 109 Stat. 803 (1995) (ICCTA). Under former 49 U.S.C. 11343(e), the Interstate Commerce Commission could only grant exemptions for finance transactions involving motor carriers of property. *Id.* at 6, n.10.

[5] Also, approval from FHWA, if needed, for any transfer of operating authorities, would be sought.

[6] This provision states that the Board ''may revoke an exemption . . . on finding that the application of a provision . . . is necessary to carry out the transportation policy of section 13101.''

11. These companies allegedly face significant competition from other bus carriers, private cars, and other modes of transportation. Coach contends that the Board has already approved Coach mergers in connection with control transactions.[7] Finally, Coach submits that competitive issues are more appropriately considered in a control proceeding because carriers under common control will be unlikely to compete with each other, than in a situation where the controlled carriers are seeking to merge for, according to Coach, ''there should be no loss of competitive options available to the traveling public.'' *Id.* at 13 (citations omitted).

Limited Scope. Coach contends that the proposed exemption is of limited scope because it involves carriers already under common control. Because, allegedly, the carriers share centralized management, the merger/consolidation ''transactions will accordingly be more focused on corporate form than on substantive operational changes.'' *Id.* at 14.

Coach submits that most of the Operating Carriers it controls are relatively small. More than half of them have annual revenues of less than $8 million, few have annual revenues of more than $20 million, and most of the Operating Carriers have fleets of less than 75 buses. Coach argues that, consistent with the standards for rail intra-corporate family transactions at 49 CFR 1180.2(d)(3), in the merger or consolidation of its Operating Carriers ''there will be no adverse change in service levels, no significant operational changes that would adversely impact the traveling public and no diminution in the level of competitive service available to the public.'' *Id.* at 15.

Public Interest. The exemption is in the public interest, according to Coach, because it will increase regulatory efficiency by reducing potentially burdensome regulatory practices. Such efficiency, Coach alleges, would save the resources of both petitioners and the Board.

In addition to these stated regulatory benefits, Coach claims that there are also commercial reasons for determining that an exemption is in the public interest. By reducing from two and a half months to 7 days the period for consummating a transaction after a filing, the period that the two merged companies are in limbo would be significantly reduced, lowering the danger that the petitioner will miss out on commercial opportunities for improving service. Coach also claims that, under an exemption, the public and the Operating Carriers would sooner enjoy the benefits of the intra-corporate family transaction. Finally, Coach asserts that reducing the regulatory waiting period will lessen uncertainty in vendors and passengers.

Discussion

As Coach's petition raises issues of first impression, we are seeking comment on Coach's petition. Commenters should address whether an exemption for intra-corporate family transactions is warranted and, if so, whether it should be available solely to Coach.

As a preliminary matter, we do not see how a class exemption could apply only to one party. If the exemption criteria are satisfied for Coach, they would also presumably apply to other parties, if any are similarly situated. Parties should address this issue.

We also question whether the concerns raised by Coach cannot be addressed under our current rules at least in those cases where there is a demonstrated need for quick action by the Board. Under 49 U.S.C. 14303(i), pending the Board's consideration of an application, we may grant interim approval to the operation of properties sought to be acquired for not more than 180 days ''when it appears that failure to do so may result in the destruction of or injury to those properties or substantially interfere with their future usefulness in providing adequate and continuous service to the public.'' *See also* 49 CFR 1182.7. If the interim approval request is submitted when the application is filed, the Board will issue its decision with the notice accepting the application, i.e., within 30 days. Section 1182.7(d)(1). This is quicker than the two and one half months that Coach claims is too long and only 23 days longer than the effective date under Coach's proposal.

Accordingly, commenters should address these issues, as well as the general issue of whether the exemption Coach proposes is in the public interest. Also, a copy of this request for comments will be served on the Department of Justice, Antitrust Division, 10th Street & Pennsylvania Avenue, NW., Washington, DC 20530.

This action will not significantly affect either the quality of the human environment or the conservation of energy resources.

Decided: May 4, 1999.

By the Board, Chairman Morgan, Vice Chairman Clyburn, and Commissioner Burkes.

Vernon A. Williams,

Secretary.

[FR Doc. 99–11877 Filed 5–10–99; 8:45 am]

BILLING CODE 4910–00–P

[7] *See Coach USA, Inc. and Leisure Time Tours-Control and Merger Exemption-Van Nortwick Bros., Inc, et al.,* STB Docket No. 33428 (STB served Nov. 3, 1997) and *Coach U.S.A., Inc. and K–T Contract Services, Inc.—Control and Merger Exemption—Gray Line Tours of Southern Nevada,* STB Docket No. 33421 (STB served Dec. 4, 1997).

DEPARTMENT OF THE TREASURY

Bureau of Alcohol, Tobacco and Firearms

Proposed Collection; Comment Request

ACTION: Notice and request for comments.

SUMMARY: The Department of the Treasury, as part of its continuing effort to reduce paperwork and respondent burden, invites the general public to comment on proposed and/or continuing information collections, as required by the Paperwork Reduction Act of 1995, Public Law 104–13 (44 U.S.C. 3506(c)(2)(A)). Currently, the Bureau of Alcohol, Tobacco and Firearms within the Department of the Treasury is soliciting comments concerning the Claim for Drawback of Tax on Cigars, Cigarettes, Cigarette Papers and Cigarette Tubes.

DATES: Written comments should be received on or before July 12, 1999 to be assured of consideration.

ADDRESSES: Direct all written comments to Linda Barnes, Bureau of Alcohol, Tobacco and Firearms, 650 Massachusetts Avenue, NW., Washington, DC 20226, (202) 927–8930.

FOR FURTHER INFORMATION CONTACT: Requests for additional information or copies of the form(s) and instructions should be directed to Nancy Kern, Regulations Division, 650 Massachusetts Avenue NW., Washington, DC 20226, (202) 927–8210.

SUPPLEMENTARY INFORMATION:

Title: Title for Drawback of Tax on Cigars, Cigarettes, Cigarette Papers and Cigarette Tubes.

OMB Number: 1512–0117.

Form Number: ATF F 5620.7 (2147).

Abstract: ATF F 5620.7 (2147) documents that cigars, cigarettes, cigarette papers and tubes were shipped to a foreign country, Puerto Rico, the Virgin Islands or a possession of the United States and that the tax was already paid on these tobacco articles. AFT F 5620.7 (2147) is the claim form that a person who paid the tax on the articles uses to file for a drawback or refund for the tax that has already been paid.

Current Actions: There are no changes to this information collection and it is being submitted for extension purposes only.

Type of Review: Extension.

Affected Public: Business or other for-profit.

Estimated Number of Respondents: 288.

Estimated Time Per Respondent: 30 minutes.

Estimated Total Annual Burden Hours: 144.

REQUEST FOR COMMENTS: Comments submitted in response to this notice will be summarized and/or included in the request for OMB approval. All comments will become a matter of public record. Comments are invited on: (a) whether the collection of information is necessary for the proper performance of the functions of the agency, including whether the information shall have practical utility; (b) the accuracy of the agency's estimate of the burden of the collection of information; (c) ways to enhance the quality, utility, and clarity of the information to be collected; (d) ways to minimize the burden of the collection of information on respondents, including through the use of automated collection techniques or other forms of information technology; and (e) estimates of capital or start-up costs and costs of operation, maintenance, and purchase of services to provide information.

Dated: May 4, 1999.

William T. Earle,

Assistant Director (Management) CFO.

[FR Doc. 99–11798 Filed 5–10–99; 8:45 am]

BILLING CODE 4810–31–M

DEPARTMENT OF THE TREASURY

Bureau of Alcohol, Tobacco and Firearms

Proposed Collection; Comment Request

ACTION: Notice and request for comments.

SUMMARY: The Department of the Treasury, as part of its continuing effort to reduce paperwork and respondent burden, invites the general public and other Federal agencies to take this opportunity to comment on proposed and/or continuing information collections, as required by the Paperwork Reduction Act of 1995, Public Law 104–13 (44 U.S.C. 3506(c)(2)(A)). Currently, the Bureau of Alcohol, Tobacco and Firearms within the Department of the Treasury is soliciting comments concerning the Withdrawal of Spirits, Specially Denatured Spirits, or Wines for Exportation.

DATES: Written comments should be received on or before July 12, 1999 to be assured of consideration.

ADDRESSES: Direct all written comments to Linda Barnes, Bureau of Alcohol, Tobacco and Firearms, 650 Massachusetts Avenue, NW., Washington, DC 20226, (202) 927–8930.

FOR FURTHER INFORMATION CONTACT: Requests for additional information or copies of the form(s) and instructions should be directed to Nancy Kern, Regulations Division, 650 Massachusetts Avenue, NW., Washington, DC 20226 (202) 927–8210.

SUPPLEMENTARY INFORMATION:

Title: Withdrawal of Spirits, Specially Denatured Spirits, or Wines for Exportation.

OMB Number: 1512–0190.

Form Number: ATF F 5100.11.

Abstract: ATF F 5100.11 is completed by exporters to report the withdrawal of spirits, denatured spirits, and wines from internal revenue bonded premises, without payment of tax for direct exportation, transfer to a foreign trade zone, customs manufacturer's bonded warehouse or customs bonded warehouse or for use as supplies on vessels or aircraft.

Current Actions: There are no changes to this information collection and it is being submitted for extension purposes only.

Type of Review: Extension.

Affected Public: Business or other for-profit.

Estimated Number of Respondents: 300.

Estimated Time Per Respondent: 1 hour.

Estimated Total Annual Burden Hours: 6,000.

REQUEST FOR COMMENTS: Comments submitted in response to this notice will be summarized and/or included in the request for OMB approval. All comments will become a matter of public record. Comments are invited on: (a) whether the collection of information is necessary for the proper performance of the functions of the agency, including whether the information shall have practical utility; (b) the accuracy of the agency's estimate of the burden of the collection of information; (c) ways to enhance the quality, utility, and clarity of the information to be collected; (d) ways to minimize the burden of the collection of information on respondents, including through the use of automated collection techniques or other forms of information technology; and (e) estimates of capital or start-up costs and costs of operation, maintenance, and purchase of services to provide information.

Dated: May 4, 1999.

William T. Earle,

Assistant Director (Management) CFO.

[FR Doc. 99–11799 Filed 5–10–99; 8:45 am]

BILLING CODE 4810–31–P

DEPARTMENT OF THE TREASURY

Bureau of Alcohol, Tobacco and Firearms

Proposed Collection; Comment Request

ACTION: Notice and request for comments.

SUMMARY: The Department of the Treasury, as part of its continuing effort to reduce paperwork and respondent burden, invites the general public and other Federal agencies to take this opportunity to comment on proposed and/or continuing information collections, as required by the Paperwork Reduction Act of 1995, Public Law 104–13 (44 U.S.C. 3506(c)(2)(A)). Currently, the Bureau of Alcohol, Tobacco and Firearms within the Department of the Treasury is soliciting comments concerning the Inventory—Export Warehouse Proprietor.

DATES: Written comments should be received on or before July 12, 1999 to be assured of consideration.

ADDRESSES: Direct all written comments to Linda Barnes, Bureau of Alcohol, Tobacco and Firearms, 650 Massachusetts Avenue, NW., Washington, DC 20226, (202) 927–8930.

FOR FURTHER INFORMATION CONTACT: Requests for additional information or copies of the form(s) and instructions should be directed to Shawn Hart, Regulations Division, 650 Massachusetts Avenue, NW., Washington, DC 20226, (202) 927–8930.

SUPPLEMENTARY INFORMATION:

Title: Inventory—Export Warehouse Proprietor.

OMB Number: 1512–0171.

Form Number: ATF F 5220.3.

Abstract: ATF F 5220.3 is used by export warehouse proprietors to record inventories that are required by law and regulations. The form provides a uniform format for recording inventories and establishes a contingent tax liability on tobacco products.

Current Actions: There are no changes to this information collection and it is being submitted for extension purposes only.

Type of Review: Extension.

Affected Public: Business or other for-profit.

Estimated Number of Respondents: 10.

Estimated Time Per Respondent: 5 hours.

Estimated Total Annual Burden Hours: 50.

REQUEST FOR COMMENTS: Comments submitted in response to this notice will be summarized and/or included in the request for OMB approval. All comments will become a matter of public record. Comments are invited on: (a) whether the collection of information is necessary for the proper performance of the functions of the agency, including whether the information shall have practical utility; (b) the accuracy of the agency's estimate of the burden of the collection of information; (c) ways to enhance the quality, utility, and clarity of the information to be collected; (d) ways to minimize the burden of the collection of information on respondents, including through the use of automated collection techniques or other forms of information technology; and (e) estimates of capital or start-up costs and costs of operation, maintenance, and purchase of services to provide information.

Dated: May 4, 1999.

William T. Earle,

Assistant Director (Management) CFO.

[FR Doc. 99–11800 Filed 5–10–99; 8:45 am]

BILLING CODE 4810–31–P

DEPARTMENT OF THE TREASURY

Bureau of Alcohol, Tobacco and Firearms

Proposed Collection; Comment Request

ACTION: Notice and request for comments.

SUMMARY: The Department of the Treasury, as part of its continuing effort to reduce paperwork and respondent burden, invites the general public and other Federal agencies to take this opportunity to comment on proposed and/or continuing information collections, as required by the Paperwork Reduction Act of 1995, Public Law 104–13 (44 U.S.C. 3506(c)(2)(A)). Currently, the Bureau of Alcohol, Tobacco and Firearms within the Department of the Treasury is soliciting comments concerning the Application and Permit to Ship Liquors and Articles of Puerto Rican Manufacture Taxpaid to the United States.

DATES: Written comments should be received on or before July 12, 1999 to be assured of consideration.

ADDRESSES: Direct all written comments to Linda Barnes, Bureau of Alcohol, Tobacco and Firearms, 650 Massachusetts Avenue, NW., Washington, DC 20226, (202) 927–8930.

FOR FURTHER INFORMATION CONTACT: Requests for additional information or copies of the form(s) and instructions should be directed to Shawn Hart, Regulations Division, 650 Massachusetts Avenue, NW., Washington, DC 20226, (202) 927–8522.

SUPPLEMENTARY INFORMATION:

Title: Application and Permit to Ship Liquors and Articles of Puerto Rican Manufacture Taxpaid to the United States.

OMB Number: 1512–0057.

Form Number: ATF F 487–B (5170.7).

Abstract: ATF F 487–B (5170.7) is used to document the shipment of taxpaid Puerto Rican articles into the U.S. The form is verified by Puerto Rican and U.S. Treasury officials to certify that products are either taxpaid or deferred under the appropriate bond and serves as a method of protection of the revenue.

Current Actions: There are no changes to this information collection and it is being submitted for extension purposes only.

Type of Review: Extension.

Affected Public: Business or other for-profit.

Estimated Number of Respondents: 20.

Estimated Time Per Respondent: 30 minutes.

Estimated Total Annual Burden Hours: 100.

REQUEST FOR COMMENTS: Comments submitted in response to this notice will be summarized and/or included in the request for OMB approval. All comments will become a matter of public record. Comments are invited on: (a) whether the collection of information is necessary for the proper performance of the functions of the agency, including whether the information shall have practical utility; (b) the accuracy of the agency's estimate of the burden of the collection of information; (c) ways to enhance the quality, utility, and clarity of the information to be collected; (d) ways to minimize the burden of the collection of information on respondents, including through the use of automated collection techniques or other forms of information technology; and (e) estimates of capital or start-up costs and costs of operation, maintenance, and purchase of services to provide information.

Dated: May 4, 1999.

William T. Earle,

Assistant Director (Management) CFO.

[FR Doc. 99–11801 Filed 5–10–99; 8:45 am]

BILLING CODE 4810–31–P

DEPARTMENT OF THE TREASURY

Bureau of Alcohol, Tobacco and Firearms

Proposed Collection; Comment Request

ACTION: Notice and request for comments.

SUMMARY: The Department of the Treasury, as part of its continuing effort to reduce paperwork and respondent burden, invites the general public and other Federal agencies to take this opportunity to comment on proposed and/or continuing information collections, as required by the Paperwork Reduction Act of 1995, Public Law 104–13 (44 U.S.C. 3506(c)(2)(A)). Currently, the Bureau of Alcohol, Tobacco and Firearms within the Department of the Treasury is soliciting comments concerning the Letterhead Request For Information in Regard to Federal Firearms Dealer's Records (Dealer's Records of Aquisition, Disposition and Supporting Data).

DATES: Written comments should be received on or before July 12, 1999 to be assured of consideration.

ADDRESSES: Direct all written comments to Linda Barnes, Bureau of Alcohol, Tobacco and Firearms, 650 Massachusetts Avenue, NW., Washington, DC 20226, (202) 927–8930.

FOR FURTHER INFORMATION CONTACT: Requests for additional information or copies of the form(s) and instructions should be directed to Dottie Morales, Public Safety Branch, 650 Massachusetts Avenue, NW., Washington, DC 20226, (202) 927–7572.

SUPPLEMENTARY INFORMATION:

Title: Letterhead Request For Information in Regard to Federal Firearms Dealer's Records (Dealer's Records of Aquisition, Disposition and Supporting Data).

OMB Number: 1512–0493.

Form Number: ATF F 5300.3.

Abstract: ATF F 5300.3 gives the user a simplified format to list the required information ATF needs to perform its functions in regard to the law. The respondent saves time because the questions are simple and a return address is supplied. The form is used to maintain a current status of firearms licensees.

Current Actions: There are no changes to this information collection and it is being submitted for extension purposes only.

Type of Review: Extension.

Affected Public: Business or other for-profit, Individuals or households.

Estimated Number of Respondents: 28,000.

Estimated Time Per Respondent: 5 minutes.

Estimated Total Annual Burden Hours: 2,380.

REQUEST FOR COMMENTS: Comments submitted in response to this notice will be summarized and/or included in the request for OMB approval. All comments will become a matter of public record. Comments are invited on: (a) whether the collection of information is necessary for the proper performance of the functions of the agency, including whether the information shall have practical utility; (b) the accuracy of the agency's estimate of the burden of the collection of information; (c) ways to enhance the quality, utility, and clarity of the information to be collected; (d) ways to minimize the burden of the collection of information on respondents, including through the use of automated collection techniques or other forms of information technology; and (e) estimates of capital or start-up costs and costs of operation, maintenance, and purchase of services to provide information.

Dated: May 4, 1999.

William T. Earle,

Assistant Director (Management) CFO.

[FR Doc. 99–11802 Filed 5–10–99; 8:45 am]

BILLING CODE 4810–31–P

DEPARTMENT OF THE TREASURY

Bureau of Alcohol, Tobacco and Firearms

Proposed Collection; Comment Request

ACTION: Notice and request for comments.

SUMMARY: The Department of the Treasury, as part of its continuing effort to reduce paperwork and respondent burden, invites the general public and other Federal agencies to take this opportunity to comment on proposed and/or continuing information collections, as required by the Paperwork Reduction Act of 1995, Public Law 104–13 (44 U.S.C. 3506(c)(2)(A)). Currently, the Bureau of Alcohol, Tobacco and Firearms within the Department of the Treasury is soliciting comments concerning the Marks on Wine Containers.

DATES: Written comments should be received on or before July 12, 1999 to be assured of consideration.

ADDRESSES: Direct all written comments to Linda Barnes, Bureau of Alcohol, Tobacco and Firearms, 650 Massachusetts Avenue NW., Washington, DC 20226, (202) 927–8930.

FOR FURTHER INFORMATION CONTACT: Requests for additional information or copies of the form(s) and instructions should be directed to Nancy Kern, Regulations Division, 650 Massachusetts Avenue, NW., Washington, DC 20226, (202) 927–8210.

SUPPLEMENTARY INFORMATION:

Title: Marks on Wine Containers.

OMB Number: 1512–0503.

Recordkeeping Requirement ID Number: ATF REC 5120/3.

Abstract: ATF requires that wine on wine premises be identified by statements of information on labels or contained in marks. ATF uses this information to validate the receipts of excise tax revenue by the Federal government. All of the required information is drawn from cost accounting records maintained to establish the price of each product. These records are maintained by manufacturers on all products even in the absence of marking requirements. Therefore, ATF does not impose any burden on the respondent. The record retension period is only required as long as the container is used for storing wine. There is no retension period beyond the time the wine is stored in the container.

Current Actions: There are no changes to this information collection and it is being submitted for extension purposes only.

Type of Review: Extension.

Affected Public: Business or other for-profit.

Estimated Number of Respondents: 1,560.

Estimated Time Per Respondent: 0.

Estimated Total Annual Burden Hours: 1.

REQUEST FOR COMMENTS: Comments submitted in response to this notice will be summarized and/or included in the request for OMB approval. All comments will become a matter of public record. Comments are invited on: (a) whether the collection of information is necessary for the proper performance of the functions of the agency, including whether the information shall have practical utility; (b) the accuracy of the agency's estimate of the burden of the collection of information; (c) ways to enhance the quality, utility, and clarity of the information to be collected; (d) ways to minimize the burden of the collection of information on respondents, including through the use of automated collection techniques or other forms of information technology; and (e) estimates of capital or start-up costs and costs of operation, maintenance, and purchase of services to provide information.

Dated: May 4, 1999.

William T. Earle,

Assistant Director (Management) CFO.

[FR Doc. 99–11803 Filed 5–10–99; 8:45 am]

BILLING CODE 4810–31–P

DEPARTMENT OF THE TREASURY

Bureau of Alcohol, Tobacco and Firearms

Proposed Collection; Comment Request

ACTION: Notice and request for comments.

SUMMARY: The Department of the Treasury, as part of its continuing effort to reduce paperwork and respondent burden, invites the general public and other Federal agencies to take this opportunity to comment on proposed and/or continuing information collections, as required by the Paperwork Reduction Act of 1995, Public Law 104–13 (44 U.S.C. 3506(c)(2)(A)). Currently, the Bureau of Alcohol, Tobacco and Firearms within the Department of the Treasury is soliciting comments concerning the Report of Theft or Loss of Explosives.

DATES: Written comments should be received on or before July 12, 1999 to be assured of consideration.

ADDRESSES: Direct all written comments to Linda Barnes, Bureau of Alcohol, Tobacco and Firearms, 650 Massachusetts Avenue, NW., Washington, DC 20226, (202) 927–8930.

FOR FURTHER INFORMATION CONTACT: Requests for additional information or copies of the form(s) and instructions should be directed to Joe Bradley, Public Safety Branch, 650 Massachusetts Avenue, NW., Washington, DC 20226, (202) 927–8053.

SUPPLEMENTARY INFORMATION:

Title: Report of Theft or Loss of Explosives.

OMB Number: 1512–0185.

Form Number: ATF F 5400.5.

Abstract: Losses or theft of explosives must, by statute, be reported within 24 hours of the discovery of the loss of theft. This form contains the minimum information necessary for ATF to initiate criminal investigations.

Current Actions: The only change to this information collection is an update of the Address Listing of ATF Offices.

Type of Review: Extension.

Affected Public: Business or other for-profit.

Estimated Number of Respondents: 250.

Estimated Time Per Respondent: 1 hour and 48 minutes.

Estimated Total Annual Burden Hours: 450.

REQUEST FOR COMMENTS: Comments submitted in response to this notice will be summarized and/or included in the request for OMB approval. All comments will become a matter of public record. Comments are invited on: (a) whether the collection of information is necessary for the proper performance of the functions of the agency, including whether the information shall have practical utility; (b) the accuracy of the agency's estimate of the burden of the collection of information; (c) ways to enhance the quality, utility, and clarity of the information to be collected; (d) ways to minimize the burden of the collection of information on respondents, including through the use of automated collection techniques or other forms of information technology; and (e) estimates of capital or start-up costs and costs of operation, maintenance, and purchase of services to provide information.

Dated: May 4, 1999.

William T. Earle,

Assistant Director (Management) CFO.

[FR Doc. 99–11804 Filed 5–10–99; 8:45 am]

BILLING CODE 4810–31–P

DEPARTMENT OF THE TREASURY

Bureau of Alcohol, Tobacco and Firearms

Proposed Collection; Comment Request

ACTION: Notice and request for comments.

SUMMARY: The Department of the Treasury, as part of its continuing effort to reduce paperwork and respondent burden, invites the general public and other Federal agencies to take this opportunity to comment on proposed and/or continuing information collections, as required by the Paperwork Reduction Act of 1995, Public Law 104–13 (44 U.S.C. 3506(c)(2)(A)). Currently, the Bureau of Alcohol, Tobacco and Firearms within the Department of the Treasury is soliciting comments concerning the Special Tax Registration and Return (Alcohol and Tobacco) and the Special Tax Registration and Return (National Firearms Act).

DATES: Written comments should be received on or before July 12, 1999 to be assured of consideration.

ADDRESSES: Direct all written comments to Linda Barnes, Bureau of Alcohol, Tobacco and Firearms, 650 Massachusetts Avenue, NW., Washington, DC 20226, (202) 927–8930.

FOR FURTHER INFORMATION CONTACT: Requests for additional information or copies of the form(s) and instructions should be directed to Timothy DeVanney, Revenue Operations Branch, 650 Massachusetts Avenue, NW., Washington, DC 20226, (202) 927–8220.

SUPPLEMENTARY INFORMATION:

Title: Special Tax Registration and Return (Alcohol and Tobacco) and Special Tax Registration and Return (National Firearms Act).

OMB Number: 1512–0472.

Form Number: ATF F 5630.5 and ATF F 5630.7.

Abstract: ATF F 5630.5 and ATF F 5630.7 are completed by persons engaged in certain alcohol, tobacco and firearms related businesses, respectively. Both forms are used to register and/or pay a special occupational tax, as required by statute. Upon receipt of the tax, a special tax stamp is issued.

Current Actions: As a result of an employee suggestion, the instructions for TAXPAYER IDENTIFYING INFORMATION Section I, have been clarified on both forms. In addition, both forms have been updated to reflect current office names and phone numbers.

Type of Review: Extension.

Affected Public: Business or other for-profit, individuals or households, and not-for-profit institutions.

Estimated Number of Respondents: 90,700.

Estimated Time Per Respondent: 48 minutes.

Estimated Total Annual Burden Hours: 72,778.

REQUEST FOR COMMENTS: Comments submitted in response to this notice will be summarized and/or included in the request for OMB approval. All comments will become a matter of public record. Comments are invited on: (a) whether the collection of information is necessary for the proper performance of the functions of the agency, including whether the information shall have practical utility; (b) the accuracy of the agency's estimate of the burden of the collection of information; (c) ways to enhance the quality, utility, and clarity of the information to be collected; (d) ways to minimize the burden of the collection of information on respondents, including through the use of automated collection techniques or other forms of information technology; and (e) estimates of capital or start-up costs and costs of operation, maintenance, and purchase of services to provide information.

Dated: May 4, 1999.

William T. Earle,

Assistant Director (Management) CFO.

[FR Doc. 99–11805 Filed 5–10–99; 8:45 am]

BILLING CODE 4810–31–P

DEPARTMENT OF THE TREASURY

Bureau of Alcohol, Tobacco and Firearms

Proposed Collection; Comment Request

ACTION: Notice and request for comments.

SUMMARY: The Department of the Treasury, as part of its continuing effort to reduce paperwork and respondent burden, invites the general public and other Federal agencies to take this opportunity to comment on proposed and/or continuing information collections, as required by the Paperwork Reduction Act of 1995, Public Law 104–13 (44 U.S.C. 3506(c)(2)(A)). Currently, the Bureau of Alcohol, Tobacco and Firearms within the Department of the Treasury is soliciting comments concerning the Personnel Questionnaire—Alcohol and Tobacco Products.

DATES: Written comments should be received on or before July 12, 1999 to be assured of consideration.

ADDRESSES: Direct all written comments to Linda Barnes, Bureau of Alcohol, Tobacco and Firearms, 650 Massachusetts Avenue, NW., Washington, DC 20226, (202) 927–8930.

FOR FURTHER INFORMATION CONTACT: Requests for additional information or copies of the form(s) and instructions should be directed to David Brokaw, Regulations Division, 650 Massachusetts Avenue, NW., Washington, DC 20226, (202) 927–8210.

SUPPLEMENTARY INFORMATION:

Title: Personnel Questionnaire—Alcohol and Tobacco Products.

OMB Number: 1512–0034.

Form Number: ATF F 5000.9.

Abstract: The information on ATF F 5000.9 enables ATF to determine whether or not an applicant for an alcohol or tobacco permit meets the minium qualifications. The form identifies the individual, residence, business background and financial sources for business and criminal

records. If the applicant is found not qualified, the permit may be denied.

Current Actions: There are no changes to this information collection and it is being submitted for extension purposes only.

Type of Review: Extension.

Affected Public: Business or other for-profit.

Estimated Number of Respondents: 5,000.

Estimated Time Per Respondent: 2 hours.

Estimated Total Annual Burden Hours: 10,000.

REQUEST FOR COMMENTS: Comments submitted in response to this notice will be summarized and/or included in the request for OMB approval. All comments will become a matter of public record.

Comments are invited on: (a) whether the collection of information is necessary for the proper performance of the functions of the agency, including whether the information shall have practical utility; (b) the accuracy of the agency's estimate of the burden of the collection of information; (c) ways to enhance the quality, utility, and clarity of the information to be collected; (d) ways to minimize the burden of the collection of information on respondents, including through the use of automated collection techniques or other forms of information technology; and (e) estimates of capital or start-up costs and costs of operation, maintenance, and purchase of services to provide information.

Dated: May 5, 1999.

William T. Earle,

Assistant Director (Management) CFO.

[FR Doc. 99–11806 Filed 5–10–99; 8:45 am]

BILLING CODE 4810–31–P

DEPARTMENT OF THE TREASURY

Bureau of Acohol, Tobacco and Firearms

Proposed Collection; Comment Request

ACTION: Notice and request for comments.

SUMMARY: The Department of the Treasury, as part of its continuing effort to reduce paperwork and respondent burden, invites the general public and other Federal agencies to take this opportunity to comment on proposed and/or continuing information collections, as required by the Paperwork Reduction Act of 1995, Public Law 104–13 (44 U.S.C. 3506(c)(2)(A)). Currently, the Bureau of Alcohol, Tobacco and Firearms within the Department of the Treasury is soliciting comments concerning the Requisition For Forms or Publications, ATF F 1370.3 and Requisition For Firearms/Explosives Forms, ATF F 1370.2.

DATES: Written comments should be received on or before July 12, 1999 to be assured of consideration.

ADDRESSES: Direct all written comments to Linda Barnes, Bureau of Alcohol, Tobacco and Firearms, 650 Massachusetts Avenue, NW., Washington, DC 20226, (202) 927–8930.

FOR FURTHER INFORMATION CONTACT: Requests for additional information or copies of the form(s) and instructions should be directed to Linda Barnes, Document Services Branch, 650 Massachusetts Avenue, NW., Washington, DC 20226, (202) 927–8930.

SUPPLEMENTARY INFORMATION:

Title: Requisition For Forms or Publications and Requisition For Firearms/Explosives Forms.

OMB Number: 1512–0001.

Form Number: ATF F 1370.3 and ATF F 1370.2.

Abstract: These forms are used by the general public to request or order forms or publications from the ATF Distribution Center. The forms notify ATF of the quantity required by the respondent and provide a guide as to annual usage of ATF forms or publications by the general public.

Current Actions: The form numbers have changed as a result of a reorganization of ATF's subject classification system.

Type of Review: Extension.

Affected Public: Business or other for-profit, individuals or households.

Estimated Number of Respondents: 30,000.

Estimated Time Per Respondent: 3 minutes.

Estimated Total Annual Burden Hours: 1,725.

REQUEST FOR COMMENTS: Comments submitted in response to this notice will be summarized and/or included in the request for OMB approval. All comments will become a matter of public record. Comments are invited on: (a) whether the collection of information is necessary for the proper performance of the functions of the agency, including whether the information shall have practical utility; (b) the accuracy of the agency's estimate of the burden of the collection of information; (c) ways to enhance the quality, utility, and clarity of the information to be collected; (d) ways to minimize the burden of the collection of information on respondents, including through the use of automated collection techniques or other forms of information technology; and (e) estimates of capital or start-up costs and costs of operation, maintenance, and purchase of services to provide information.

Dated: May 5, 1999.

William T. Earle,

Assistant Director (Management) CFO.

[FR Doc. 99–11807 Filed 5–10–99; 8:45 am]

BILLING CODE 4810–31–P

DEPARTMENT OF THE TREASURY

Bureau of Alcohol, Tobacco and Firearms

Proposed Collection; Comment Request

ACTION: Notice and request for comments.

SUMMARY: The Department of the Treasury, as part of its continuing effort to reduce paperwork and respondent burden, invites the general public and other Federal agencies to take this opportunity to comment on proposed and/or continuing information collections, as required by the Paperwork Reduction Act of 1995, Public Law 104–13 (44 U.S.C. 3506(c)(2)(A)). Currently, the Bureau of Alcohol, Tobacco and Firearms within the Department of the Treasury is soliciting comments concerning the Application for Operating Permit Under 26 U.S.C. 5171(d).

DATES: Written comments should be received on or before July 12, 1999 to be assured of consideration.

ADDRESSES: Direct all written comments to Linda Barnes, Bureau of Alcohol, Tobacco and Firearms, 650 Massachusetts Avenue, NW., Washington, DC 20226, (202) 927–8930.

FOR FURTHER INFORMATION CONTACT: Requests for additional information or copies of the form(s) and instructions should be directed to Shawn Hart, Regulations Division, 650 Massachusetts Avenue NW., Washington, DC 20226, (202) 927–8522.

SUPPLEMENTARY INFORMATION:

Title: Application for Operating Permit Under 26 U.S.C. 5171(d).

OMB Number: 1512–0195.

Form Number: ATF F 5110.25.

Abstract: ATF F 5110.25 is completed by proprietors of distilled spirits plants who engage in certain specified types of activities. ATF personnel use the information on the form to identify the applicant, the location of the business and the types of activities to be conducted.

Current Actions: There are no changes to this information collection and it is being submitted for extension purposes only.

Type of Review: Extension.

Affected Public: Business or other for-profit.

Estimated Number of Respondents: 80.

Estimated Time Per Respondent: 15 minutes.

Estimated Total Annual Burden Hours: 20.

REQUEST FOR COMMENTS: Comments submitted in response to this notice will be summarized and/or included in the request for OMB approval. All comments will become a matter of public record. Comments are invited on: (a) whether the collection of information is necessary for the proper performance of the functions of the agency, including whether the information shall have practical utility; (b) the accuracy of the agency's estimate of the burden of the collection of information; (c) ways to enhance the quality, utility, and clarity of the information to be collected; (d) ways to minimize the burden of the collection of information on respondents, including through the use of automated collection techniques or other forms of information technology; and (e) estimates of capital or start-up costs and costs of operation, maintenance, and purchase of services to provide information.

Dated: May 5, 1999.

William T. Earle,

Assistant Director (Management) CFO.

[FR Doc. 99–11808 Filed 5–10–99; 8:45 am]

BILLING CODE 4810–31–P

DEPARTMENT OF THE TREASURY

Bureau of Alcohol, Tobacco and Firearms

Proposed Collection; Comment Request

ACTION: Notice and request for comments.

SUMMARY: The Department of the Treasury, as part of its continuing effort to reduce paperwork and respondent burden, invites the general public and other Federal agencies to take this opportunity to comment on proposed and/or continuing information collections, as required by the Paperwork Reduction Act of 1995, Public Law 104–13 (44 U.S.C. 3506(c)(2)(A)). Currently, the Bureau of Alcohol, Tobacco and Firearms within the Department of the Treasury is soliciting comments concerning the Application for National Firearm Examiner Academy.

DATES: Written comments should be received on or before July 12, 1999 to be assured of consideration.

ADDRESSES: Direct all written comments to Linda Barnes, Bureau of Alcohol, Tobacco and Firearms, 650 Massachusetts Avenue, NW., Washington, DC 20226, (202) 927–8930.

FOR FURTHER INFORMATION CONTACT: Requests for additional information or copies of the form(s) and instructions should be directed to Thomas Cannon, Career Development Division, 650 Massachusetts Avenue, NW., Washington, DC 20226, (202) 565–4570.

SUPPLEMENTARY INFORMATION:

Title: Application for National Firearm Examiner Academy.

OMB Number: 1512–0549.

Form Number: ATF F 6330.1.

Abstract: The Office of Training and Professional Development at ATF has developed a new training program for entry level firearm and toolmark examiners. The application form will allow ATF to process eligible candidates.

Current Actions: There are no changes to this information collection and it is being submitted for entension purposes only.

Type of Review: Extension.

Affected Public: Federal Government, State, Local or Tribal Government.

Estimated Number of Respondents: 75.

Estimated Time Per Respondent: 10 minutes.

Estimated Total Annual Burden Hours: 13.

REQUEST FOR COMMENTS: Comments submitted in response to this notice will be summarized and/or included in the request for OMB approval. All comments will become a matter of public record. Comments are invited on: (a) whether the collection of information is necessary for the proper performance of the functions of the agency, including whether the information shall have practical utility; (b) the accuracy of the agency's estimate of the burden of the collection of information; (c) ways to enhance the quality, utility, and clarity of the information to be collected; (d) ways to minimize the burden of the collection of information on respondents, including through the use of automated collection techniques or other forms of information technology; and (e) estimates of capital or start-up costs and costs of operation, maintenance, and purchase of services to provide information.

Dated: May 5, 1999.

William T. Earle,

Assistant Director (Management) CFO.

[FR Doc. 99–11809 Filed 5–10–99; 8:45 am]

BILLING CODE 4810–31–P

DEPARTMENT OF THE TREASURY

Internal Revenue Service

Proposed Collection; Comment Request for Form W–4V

AGENCY: Internal Revenue Service (IRS), Treasury.

ACTION: Notice and request for comments.

SUMMARY: The Department of the Treasury, as part of its continuing effort to reduce paperwork and respondent burden, invites the general public and other Federal agencies to take this opportunity to comment on proposed and/or continuing information collections, as required by the Paperwork Reduction Act of 1995, Public Law 104–13 (44 U.S.C. 3506(c)(2)(A)). Currently, the IRS is soliciting comments concerning Form W–4V, Voluntary Withholding Request.

DATES: Written comments should be received on or before July 12, 1999, to be assured of consideration.

ADDRESSES: Direct all written comments to Garrick R. Shear, Internal Revenue Service, room 5571, 1111 Constitution Avenue NW., Washington, DC 20224.

FOR FURTHER INFORMATION CONTACT: Requests for additional information or copies of the form and instructions should be directed to Carol Savage, (202) 622–3945, Internal Revenue Service, room 5569, 1111 Constitution Avenue NW., Washington, DC 20224.

SUPPLEMENTARY INFORMATION:

Title: Voluntary Withholding Request.

OMB Number: 1545–1501.

Form Number: W–4V.

Abstract: If an individual receives any of the following government payments, he/she may voluntarily complete Form W–4V to request that the payer withhold Federal income tax. Those payments are unemployment compensation, social security benefits, tier I railroad retirement benefits, Commodity Credit Corporation loans, or certain crop disaster payments under the Agricultural Act of 1949 or title II of the Disaster Assistance Act of 1988.

Current Actions: There are no changes being made to the form at this time.

Type of Review: Extension of a currently approved collection.

Affected Public: Individuals or households, and farms.

Estimated Number of Respondents: 19,700,000.

Estimated Time Per Respondent: 29 minutes.

Estimated Total Annual Burden Hours: 9,653,000.

The following paragraph applies to all of the collections of information covered by this notice:

An agency may not conduct or sponsor, and a person is not required to respond to, a collection of information unless the collection of information displays a valid OMB control number. Books or records relating to a collection of information must be retained as long as their contents may become material in the administration of any internal revenue law. Generally, tax returns and tax return information are confidential, as required by 26 U.S.C. 6103.

REQUEST FOR COMMENTS: Comments submitted in response to this notice will be summarized and/or included in the request for OMB approval. All comments will become a matter of public record. Comments are invited on: (a) whether the collection of information is necessary for the proper performance of the functions of the agency, including whether the information shall have practical utility; (b) the accuracy of the agency's estimate of the burden of the collection of information; (c) ways to enhance the quality, utility, and clarity of the information to be collected; (d) ways to minimize the burden of the collection of information on respondents, including through the use of automated collection techniques or other forms of information technology; and (e) estimates of capital or start-up costs and costs of operation, maintenance, and purchase of services to provide information.

Approved: May 3, 1999.

Garrick R. Shear,

IRS Reports Clearance Officer.

[FR Doc. 99–11748 Filed 5–10–99; 8:45 am]

BILLING CODE 4830–01–U

DEPARTMENT OF THE TREASURY

Internal Revenue Service

Proposed Collection; Comment Request for Form 990–BL; Schedule A (Form 990–BL), Form 6069

AGENCY: Internal Revenue Service (IRS), Treasury.

ACTION: Notice and request for comments.

SUMMARY: The Department of the Treasury, as part of its continuing effort to reduce paperwork and respondent burden, invites the general public and other Federal agencies to take this opportunity to comment on proposed and/or continuing information collections, as required by the Paperwork Reduction Act of 1995, Public Law 104–13 (44 U.S.C. 3506(c)(2)(A)). Currently, the IRS is soliciting comments concerning Form 990-BL, Information and Initial Excise Tax Return for Black Lung Benefit Trusts and Certain Related Persons, and Form 6069, Return of Excise Tax on Excess Contributions to Black Lung Benefit Trust Under Section 4953 and Computation of Section 192 Deduction.

DATES: Written comments should be received on or before July 12, 1999, to be assured of consideration.

ADDRESSES: Direct all written comments to Garrick R. Shear, Internal Revenue Service, room 5571, 1111 Constitution Avenue NW., Washington, DC 20224.

FOR FURTHER INFORMATION CONTACT: Requests for additional information or copies of the forms and instructions should be directed to Carol Savage, (202) 622–3945, Internal Revenue Service, room 5569, 1111 Constitution Avenue NW., Washington, DC 20224.

SUPPLEMENTARY INFORMATION:

Title: Form 990–BL, Information and Initial Excise Tax Return for Black Lung Benefit Trusts and Certain Related Persons, and Form 6069, Return of Excise Tax on Excess Contributions to Black Lung Benefit Trust Under Section 4953 and Computation of Section 192 Deduction.

OMB Number: 1545–0049.

Form Number: Form 990–BL; Schedule A (Form 990–BL), and Form 6069.

Abstract: IRS uses Form 990–BL to monitor activities of black lung benefit trusts, and to collect excise taxes on these trusts and certain related persons if they engage in proscribed activities. The tax is figured on Schedule A and attached to Form 990–BL. Form 6069 is used by coal mine operators to figure the maximum deduction to a black lung benefit trust. If excess contributions are made, IRS uses the form to figure and collect the tax on excess contributions.

Current Actions: There are no changes being made to the forms at this time.

Type of Review: Extension of a currently approved collection.

Affected Public: Business or other for-profit organizations, individuals, and not-for-profit institutions.

Estimated Number of Respondents: 22.

Estimated Time Per Respondent: 26 hours, 3 minutes.

Estimated Total Annual Burden Hours: 573.

The following paragraph applies to all of the collections of information covered by this notice:

An agency may not conduct or sponsor, and a person is not required to respond to, a collection of information unless the collection of information displays a valid OMB control number. Books or records relating to a collection of information must be retained as long as their contents may become material in the administration of any internal revenue law. Generally, tax returns and tax return information are confidential, as required by 26 U.S.C. 6103.

REQUEST FOR COMMENTS: Comments submitted in response to this notice will be summarized and/or included in the request for OMB approval. All comments will become a matter of public record. Comments are invited on: (a) whether the collection of information is necessary for the proper performance of the functions of the agency, including whether the information shall have practical utility; (b) the accuracy of the agency's estimate of the burden of the collection of information; (c) ways to enhance the quality, utility, and clarity of the information to be collected; (d) ways to minimize the burden of the collection of information on respondents, including through the use of automated collection techniques or other forms of information technology; and (e) estimates of capital or start-up costs and costs of operation, maintenance, and purchase of services to provide information.

Approved: April 29, 1999.

Garrick R. Shear,

IRS Reports Clearance Officer.

[FR Doc. 99–11749 Filed 5–10–99; 8:45 am]

BILLING CODE 4830–01–U

DEPARTMENT OF THE TREASURY

Internal Revenue Service

Proposed Collection; Comment Request for Form 9620

AGENCY: Internal Revenue Service (IRS), Treasury.

ACTION: Notice and request for comments.

SUMMARY: The Department of the Treasury, as part of its continuing effort to reduce paperwork and respondent burden, invites the general public and other Federal agencies to take this opportunity to comment on proposed and/or continuing information collections, as required by the Paperwork Reduction Act of 1995, Public Law 104–13 (44 U.S.C. 3506(c)(2)(A)). Currently, the IRS is

soliciting comments concerning Form 9620, Race and National Origin Identification.

DATES: Written comments should be received on or before July 12, 1999, to be assured of consideration.

ADDRESSES: Direct all written comments to Garrick R. Shear, Internal Revenue Service, room 5571, 1111 Constitution Avenue NW., Washington, DC 20224.

FOR FURTHER INFORMATION CONTACT: Requests for additional information or copies of the form and instructions should be directed to Carol Savage, (202) 622–3945, Internal Revenue Service, room 5569, 1111 Constitution Avenue NW., Washington, DC 20224.

SUPPLEMENTARY INFORMATION:

Title: Race and National Origin Identification.

OMB Number: 1545–1398.

Form Number: 9620.

Abstract: Form 9620 is an optically scannable form that is used to collect race and national origin data on all IRS employees and new hires. The form is a valuable tool in allowing the IRS to meet its diversity/EEO goals and as a component of its referral and tracking system and recruitment program.

Current Actions: There are no changes being made to the form at this time.

Type of Review: Extension of a currently approved collection.

Affected Public: Individuals or households, and the Federal Government.

Estimated Number of Respondents: 50,000.

Estimated Time Per Respondent: 3 minutes.

Estimated Total Annual Burden Hours: 2,500.

The following paragraph applies to all of the collections of information covered by this notice:

An agency may not conduct or sponsor, and a person is not required to respond to, a collection of information unless the collection of information displays a valid OMB control number. Books or records relating to a collection of information must be retained as long as their contents may become material in the administration of any internal revenue law. Generally, tax returns and tax return information are confidential, as required by 26 U.S.C. 6103.

REQUEST FOR COMMENTS: Comments submitted in response to this notice will be summarized and/or included in the request for OMB approval. All comments will become a matter of public record. Comments are invited on: (a) whether the collection of information is necessary for the proper performance of the functions of the agency, including whether the information shall have practical utility; (b) the accuracy of the agency's estimate of the burden of the collection of information; (c) ways to enhance the quality, utility, and clarity of the information to be collected; (d) ways to minimize the burden of the collection of information on respondents, including through the use of automated collection techniques or other forms of information technology; and (e) estimates of capital or start-up costs and costs of operation, maintenance, and purchase of services to provide information.

Approved: May 3, 1999.

Garrick R. Shear,

IRS Reports Clearance Officer.

[FR Doc. 99–11751 Filed 5–10–99; 8:45 am]

BILLING CODE 4830–01–U

DEPARTMENT OF THE TREASURY

Internal Revenue Service

Open Meeting of Citizen Advocacy Panel, Brooklyn District

AGENCY: Internal Revenue Service (IRS), Treasury.

ACTION: Notice.

SUMMARY: An open meeting of the Brooklyn District Citizen Advocacy Panel will be held in Brooklyn, New York.

DATES: The meeting will be held Friday, May 14, 1999.

FOR FURTHER INFORMATION CONTACT: Kevin McKeon at 1–888–912–1227 or 718–488–3555.

SUPPLEMENTARY INFORMATION: Notice is hereby given pursuant to section 10(a)(2) of the Federal Advisory Committee Act, 5 U.S.C. App. (1988) that an operational meeting of the Citizen Advocacy Panel will be held Friday, May 14, 1999, 6:00 p.m. to 9:00 p.m. at 10 MetroTech Center, 6th Floor, 625 Fulton Street, Brooklyn, N.Y. 11201. Due to limited conference space, notification of intent to attend the meeting must be made with Kevin McKeon. Mr. McKeon can be reached at 1–888–912–1227 or 718–488–3555. The public is invited to make oral comments from 7:00 p.m. to 8:00 p.m. on Friday, May 14, 1999. Individual comments will be limited to 5 minutes.

If you would like to have the CAP consider a written statement, please call 1–888–912–1227 or 718–488–3555, or write Kevin McKeon, CAP Office, P.O. Box R, Brooklyn, N.Y., 11202. The Agenda will include the following: reports of the sub-committees and various IRS issues.

Note: Last minute changes to the agenda are possible and could prevent effective advance notice.

Dated: May 3, 1999.

Jack Mannion,

Chief, Special Projects.

[FR Doc. 99–11752 Filed 5–11–99; 8:45 am]

BILLING CODE 4830–01–P

DEPARTMENT OF THE TREASURY

Internal Revenue Service

Open Meeting of the Citizen Advocacy Panel, Pacific-Northwest District

AGENCY: Internal Revenue Service (IRS), Treasury.

ACTION: Notice.

SUMMARY: An open meeting of the Pacific-Northwest District Citizen Advocacy Panel will be held in Seattle, Washington.

DATES: The meeting will be held Saturday, May 22, 1999.

FOR FURTHER INFORMATION CONTACT: Deborah A. Diamond at 1–888–912–1227 or 206–220–6099.

SUPPLEMENTARY INFORMATION: Notice is hereby given pursuant to section 10(a)(2) of the Federal Advisory Committee Act, 5 U.S.C. App. (1988) that an operational meeting of the Citizen Advocacy Panel will be held Saturday, May 22, 1999, 9:00 a.m. to 5:00 p.m. at the Edmond Meany Hotel, Chancellor Room, 4507 Brooklyn Avenue NE, Seattle, WA. Due to limited conference space, notification of intent to attend the meeting must be made with Deborah Diamond.

Ms. Diamond can be reached at 1–888–912–1227 or 206–220–6099. The public is invited to make oral comments from 10:00 a.m. to 11:00 a.m. on Saturday, May 22, 1999. Individual comments will be limited to 5 minutes. If you would like to have the CAP consider a written statement, please call 1-888–912–1227 or 206–220–6099, or write Deborah Diamond, CAP Office, 915 2nd Avenue; M/S W-406, Seattle, WA 98174.

The Agenda will include the following: subcommittee reports and various IRS issues.

Note: Last minute changes to the agenda are possible and could prevent effective advance notice.

Dated: May 3, 1999.

Jack Mannion,

Chief, Special Projects.

[FR Doc. 99–11753 Filed 5–10–99; 8:45 am]

BILLING CODE 4830–01–P

DEPARTMENT OF VETERANS AFFAIRS

[OMB Control No. 2900–0085]

Agency Information Collection Activities Under OMB Review

AGENCY: Board of Veterans' Appeals, Department of Veterans Affairs.

ACTION: Notice.

SUMMARY: In compliance with the Paperwork Reduction Act (PRA) of 1995 (44 U.S.C., 3501 *et seq.*), this notice announces that the Board of Veterans' Appeals (BVA), Department of Veterans Affairs, has submitted the collection of information abstracted below to the Office of Management and Budget (OMB) for review and comment. The PRA submission describes the nature of the information collection and its expected cost and burden; it includes the actual data collection instrument.

DATES: Comments must be submitted on or before June 10, 1999.

FOR FURTHER INFORMATION OR A COPY OF THE SUBMISSION CONTACT: Denise McLamb, Information Management Service (045A4), Department of Veterans Affairs, 810 Vermont Avenue, NW, Washington, DC 20420, (202) 273–8030 or FAX (202) 273–5981. Please refer to ''OMB Control No. 2900–0085.''

SUPPLEMENTARY INFORMATION:

Titles:

a. Appeal to Board of Veterans' Appeals, VA Form 9.

b. Withdrawal of Services by a Representative.

c. Filing of Representative's Fee Agreements and Motions for Review of Such Agreements.

d. Motion for Review of Representative's Charges for Expenses.

e. Request for Changes in Hearing Date.

f. Motion for Reconsideration.

OMB Control Number: 2900–0085.

Type of Review: Extension of a currently approved collection.

Abstract

a. VA Form 9 is furnished to an appellant so that he or she has the information necessary to perfect an appeal from a denial of VA benefits.

b. When the appellant's representative withdraws from a case, information must be obtained in order to afford protection to the appellant and in order for BVA to be able to know who is providing representational services in each individual case.

c. Agreements for fees charged by individuals or organizations for representing claimants and appellants before VA are filed with, and reviewed by, the Board of Veterans' Appeals. The information is used to afford protection to VA claimants by ensuring that the VA benefits are not diverted from their intended purpose through overreaching by unscrupulous representatives and in processing payment of fees from VA benefits when provided by the agreement.

d. Expense reimbursements claimed by individuals and organizations for representing claimants and appellants before VA have been monitored for fairness for many years. The information is used to monitor representatives' fees for reasonableness and ensure that unreasonable fees are not charged by claiming such fees under the guise of ''expenses.''

e. VA provides hearings to appellants and their representatives, as required by basic Constitutional due-process and by Title 38 U.S.C. 7107(b). From time to time, hearing dates and/or times are changed, hearing requests withdrawn and new hearings requested after failure to appear at a scheduled hearing. The information is used to comply with the appellants' or their representatives' requests.

f. Decisions by BVA are final unless the Chairman orders reconsideration of the decision. The information provided is unique in each case and must be provided in order for BVA to be aware that reconsideration is being sought and to inform BVA of the basis of the request. Failure to obtain the information would result in depriving appellants of this potential form of relief.

An agency may not conduct or sponsor, and a person is not required to respond to a collection of information unless it displays a currently valid OMB control number. The **Federal Register** Notice with a 60-day comment period soliciting comments on this collection of information was published on July 21, 1998 at page 39119.

Affected Public: Individuals or households, Business or other for-profit, and Not-for-profit institutions.

Estimated Total Annual Burden: 36,837 hours.

a. Appeal to Board of Veterans' Appeals '' 32,500 hours.

b. Withdrawal of Services by a Representative—183 hours.

c. Filing and Motions for Review of fee Agreements—225 hours.

d. Motion for Review of Expenses—4 hours.

e. Request for Changes in Hearing Date—2,374 hours.

f. Motion for Reconsideration—1,550 hours.

Estimated Average Burden Per Respondent

a. Appeal to Board of Veterans' Appeals—1 hour.

b. Withdrawal of Services by a Representative—20 minutes.

c. Fee Agreement—30 minutes (contract modifications), 10 minutes (basic filing)—2 hours (filing motion or response).

d. Motion for Review of Expenses—2 hours (motion or response to motion).

e. Request for Changes in Hearing Date—15 minutes (basic request)—1 hour (requests requiring preparation of a motion).

f. Motion for Reconsideration—1 hour.

Frequency of Response: On occasion.

Estimated Total Number of Respondents: 41,644.

a. Appeal to Board of Veterans' Appeals—32,500.

b. Withdrawal of Services by a Representative—550.

c. Fee Agreement—875.

d. Motion for Review of Expenses—2.

e. Request for Changes in Hearing Date—6,167.

f. Motion for Reconsideration—1,550.

Send comments and recommendations concerning any aspect of the information collection to VA's OMB Desk Officer, Allison Eydt, OMB Human Resources and Housing Branch, New Executive Office Building, Room 10235, Washington, DC 20503 (202) 395–4650. Please refer to ''OMB Control No. 2900–0390'' in any correspondence.

Dated: April 29, 1999.

By direction of the Secretary.

Donald L. Neilson,

Director, Information Management Service.

[FR Doc. 99–11769 Filed 5–10–99; 8:45 am]

BILLING CODE 8320–01–P

DEPARTMENT OF VETERANS AFFAIRS

[OMB Control No. 2900–0390]

Agency Information Collection Activities Under OMB Review

AGENCY: Veterans Benefits Administration, Department of Veterans Affairs.

ACTION: Notice.

SUMMARY: In compliance with the Paperwork Reduction Act (PRA) of 1995 (44 U.S.C., 3501 *et seq.*), this notice announces that the Veterans Benefits Administration (VBA), Department of Veterans Affairs, has submitted the collection of information abstracted below to the Office of Management and

Budget (OMB) for review and comment. The PRA submission describes the nature of the information collection and its expected cost and burden; it includes the actual data collection instrument.

DATES: Comments must be submitted on or before June 10, 1999.

FOR FURTHER INFORMATION OR A COPY OF THE SUBMISSION CONTACT: Ron Taylor, Information Management Service (045A4), Department of Veterans Affairs, 810 Vermont Avenue, NW, Washington, DC 20420, (202) 273–8015 or FAX (202) 273–5981. Please refer to ''OMB Control No. 2900–0390.''

SUPPLEMENTARY INFORMATION:

Title: Application of Surviving Spouse or Child for REPS Benefits (Restored Entitlement Program for Survivors), VA Form 21–8924.

OMB Control Number: 2900–0390.

Type of Review: Reinstatement, without change, for a previously approved collection for which approval has expired.

Abstract: VA administers the REPS program. The program pays VA benefits to certain surviving spouses and children of veterans who died in service prior to August 13, 1981 or who died as a result of a service-connected disability incurred or aggravated prior to August 13, 1981. VA Form 21–8924 is used by survivors of deceased veterans to claim REPS benefits. The information is used by VBA to determine if the applicant meets REPS eligibility criteria.

An agency may not conduct or sponsor, and a person is not required to respond to a collection of information unless it displays a currently valid OMB control number. The **Federal Register** Notice with a 60-day comment period soliciting comments on this collection of information was published on December 23, 1998 at pages 71190–71191.

Affected Public: Individuals or households.

Estimated Annual Burden: 2,500 hours.

Estimated Average Burden Per Respondent: 20 minutes.

Frequency of Response: One time for most beneficiaries.

Estimated Number of Respondents: 7,500.

Send comments and recommendations concerning any aspect of the information collection to VA's OMB Desk Officer, Allison Eydt, OMB Human Resources and Housing Branch, New Executive Office Building, Room 10235, Washington, DC 20503 (202) 395–4650. Please refer to ''OMB Control No. 2900–0390'' in any correspondence.

Dated: April 9, 1999.

By direction of the Secretary.

Donald L. Neilson,

Director, Information Management Service.

[FR Doc. 99–11770 Filed 5–10–99; 8:45 am]

BILLING CODE 8320–01–P

Corrections

Federal Register

Vol. 64, No. 90

Tuesday, May 11, 1999

This section of the FEDERAL REGISTER contains editorial corrections of previously published Presidential, Rule, Proposed Rule, and Notice documents. These corrections are prepared by the Office of the Federal Register. Agency prepared corrections are issued as signed documents and appear in the appropriate document categories elsewhere in the issue.

AGENCY FOR INTERNATIONAL DEVELOPMENT

48 CFR Part 715

[AIDAR Notice 98–1]

Miscellaneous Amendments to Acquisition Regulations

Correction

In rule document 99–6609 beginning on page 16647 in the issue of Tuesday, April 6, 1999, make the following corrections:

PART 715 [CORRECTED]

1. On page 16648, in the third column, in amendatory instruction 5, in the 10th line, ''716.613–70'' should read ''715.613–70''.

715.305 [Corrected]

2. On the same page, in the same column, in 715.305(c), in the first line, ''Office'' should read ''Officer''; and in the second line, ''authorized'' should read ''authorize''.

715.602 [Corrected]

3. On page 16649, in the first column, in 715.602, paragraph designation ''(B)'' should read ''(b)''.

[FR Doc. C9–6609 Filed 05–10–99; 8:45 am]

BILLING CODE 1505–01–D

DEPARTMENT OF DEFENSE

Office of the Secretary

32 CFR Part 290

[DCAA Reg. 5410.8]

Defense Contract Audit Agency (DCAA) Freedom of Information Act Program

Correction

In rule document 99–274, beginning on page 1130 in the issue of Friday, January 8, 1999, make the following correction:

Appendix B to Part 290 [Corrected]

On page 1131, in the first column, in amendatory instruction 7, in the second line, ''zing'' should read ''amended by capitalizing''.

[FR Doc. C9–274 Filed 5–10–99; 8:45 am]

BILLING CODE 1505–01–D

DEPARTMENT OF HEALTH AND HUMAN SERVICES

Food and Drug Administration

[Docket No. 99N-1010]

Agency Information Collection Activities: Proposed Collection; Comment Request; Investigational New Drug Regulations

Correction

In notice document 99–11310 beginning on page 24402 in the issue of Thursday, May 6, 1999, make the following correction(s):

On page 24402, in the first column, in the **DATES** section, ''July 6, 1998'' should read ''July 6, 1999''.

[FR Doc. C9–11310 Filed 5–10–99; 8:45 am]

BILLING CODE 1505–01–D

DEPARTMENT OF JUSTICE

Drug Enforcement Administration

[DEA–182P]

21 CFR Part 1308

Schedules of Controlled Substances: Proposed Placement of Zaleplon into Schedule IV

Correction

In proposed rule document 99–11289, beginning on page 24094 in the issue of Wednesday May 5, 1999, make the following corrections:

1. On page 24094, in the third column, beginning in the eighth line from the bottom, the sentence ''Zaleplon–related overdoes were also noted during the clinical trials'' is removed.

2. On the same page, in the same column, in the fifth line from the bottom, ''overdoes'' should read ''overdoses''.

[FR Doc. C9–11289 Filed 5–10–99; 8:45 am]

BILLING CODE 1505–01–D

DEPARTMENT OF TRANSPORTATION

Coast Guard

46 CFR Part 16

[USCG–1998–4469]

RIN 2115–AF67

Management Information System (MIS) Requirements

Correction

In rule document 99–10553 beginning on page 22555, in the issue of Tuesday, April 27, 1999, make the following corrections:

1. On page 22557, in the first column, in the third paragraph, in the fourth line, ''43'' should read ''+''.

2. On the same page, in the same column, in the same paragraph, in the fifth line, ''43'' should read ''+''.

3. On the same page, in the second column, in the second full paragraph, in the fourth line from the bottom, ''43'' should read ''+''.

4. On the same page, in the same column, in the same paragraph, in the second line from the bottom, ''43'' should read ''+''.

[FR Doc. C9–10553 Filed 5–10–99; 8:45 am]

BILLING CODE 1505–01–D

federal register

Tuesday
May 11, 1999

Part II

Environmental Protection Agency

40 CFR Part 261 et al.

Land Disposal Restrictions Phase IV: Treatment Standards for Wood Preserving Wastes, Treatment Standards for Metal Wastes, Zinc Micronutrient Fertilizers, Carbamate Treatment Standards, and K088 Treatment Standards; Final Rule

ENVIRONMENTAL PROTECTION AGENCY

40 CFR Parts 261, 262, and 268

RIN 2050–AE05

[EPA # F–98–P3F4–FFFFF; FRL–6335–7]

Land Disposal Restrictions Phase IV: Treatment Standards for Wood Preserving Wastes, and Treatment Standards for Metal Wastes, and Zinc Micronutrient Fertilizers, and Carbamate Treatment Standards, and K088 Treatment Standards, Final Rule

AGENCY: Environmental Protection Agency (EPA).

ACTION: Final rule; technical correction.

SUMMARY: This rule corrects and clarifies five related rules the EPA published on May 12, 1997, May 26, 1998, August 31, 1998, September 4, 1998, and September 24, 1998. On May 12, 1997, EPA published regulations promulgating Land Disposal Restrictions (LDR) treatment standards for wood preserving wastes, as well as reducing the paperwork burden for complying with LDRs. On May 26, 1998, EPA published regulations promulgating LDR treatment standards for metal-bearing wastes, as well as amending the LDR treatment standards for soil contaminated with hazardous waste, and amending the definition of which secondary materials from mineral processing are considered to be wastes subject to the LDRs. On August 31, 1998, EPA published an administrative stay of the metal-bearing waste treatment standards as they apply to zinc micronutrient fertilizers. On September 4, 1998, EPA published an emergency revision of the LDR treatment standards for hazardous wastes from the production of carbamate wastes. On September 24, 1998, EPA published revised treatment standards for spent aluminum potliners from primary aluminum production. Today's rule makes technical corrections and clarifications to these final regulations.

EFFECTIVE DATE: This rule is effective on May 11, 1999.

ADDRESSES: The public may obtain a copy of this technical correction at the RCRA Information Center (RIC), located at Crystal Gateway One, 1235 Jefferson Davis Highway, First Floor, Arlington, Virginia.

FOR FURTHER INFORMATION CONTACT: For general information contact the RCRA Hotline at (800) 424–9346 (toll free) or (703) 920–9810 in the Washington, DC metropolitan area. For information on this rule contact Peggy Vyas (5302W), Office of Solid Waste, 401 M Street, SW, Washington, DC 20460, (703) 308–5477, e-mail address is ''vyas.peggy@epamail.epa.gov''.

SUPPLEMENTARY INFORMATION:

I. Reasons and Basis for Today's Amendments

The Agency has received several comments from the regulated community requesting clarification and correction of certain aspects of five rules all promulgating and revising Phase IV of the LDRs. These are: the May 12, 1997 LDR Phase IV final rule (the so-called ''Mini'' Rule, 62 FR 25998), the May 26, 1998 LDR Phase IV final rule (63 FR 28556), the August 31, 1998 administrative stay of the May 26, 1998 rule's applicability to certain zinc micronutrient fertilizers (63 FR 46332), the September 4, 1998 emergency revisions to the treatment standards for carbamate production wastes (63 FR 172), and the September 24, 1998 revisions to the treatment standards for spent aluminum potliners (63 FR 51254). Today's preamble discussion amendments make clarifications and technical corrections where appropriate in light of the comments received.

II. Clarification of the May 12, 1997 LDR Phase IV ''Mini Rule''

On May 12, 1997, EPA published regulations promulgating certain aspects of the original LDR Phase IV proposal (60 FR 11702, March 2, 1995), including a discussion clarifying point of generation of hazardous wastes (see 60 FR 26006–7, May 12, 1997). That discussion may have been confusing with regard to the status of sludge from high-TOC ignitable waste treated in entirely tank-based NPDES or POTW discharge systems. To clarify, EPA's position is that where wastes are managed in NPDES or POTW discharge systems that are entirely tank-based, the wastes are not destined for land disposal and, therefore, neither the LDR disposal prohibitions nor the treatment standards (or attendant dilution prohibition) apply. Conversely, where an NPDES or POTW discharge system includes a land-based unit (i.e., a surface impoundment), wastes managed in the system are considered to be destined for land disposal, and the LDR regulations do apply. See 61 FR 15566 at 15570 (April 8, 1996), 53 FR 31136 at 31149 (August 17, 1988).

Accordingly, the management of a high-TOC ignitable waste in an entirely tank-based NPDES or POTW discharge system—whether inadvertent or not—would trigger no LDR requirements. Sludge subsequently removed from the tanks would be considered newly-generated waste (for LDR purposes) regardless of any changes in treatability group, and LDR requirements would apply with respect to its management only if the sludge itself is hazardous waste when removed. If the sludge is a hazardous waste, the LDR treatment standard that would apply would depend on the hazardous waste code and treatability group (or subcategory) of the sludge itself.

III. Amendments to and Clarifications of the May 26, 1998 LDR Phase IV Final Rule

Several errors exist in the regulatory language of the LDR Phase IV final rule, which we are correcting with today's rule. We are also making several clarifications to the preamble of the LDR Phase IV final rule.

A. Corrections to the LDR Phase IV Final Rule

1. Section 261.2(e)(1)(iii)

Section 261.2(e) identifies materials that are not solid wastes when recycled. The rule added an amendment to § 261.2(e)(1)(iii), which amendment applies only to secondary materials generated and reclaimed by the primary mineral processing industry. The rule inadvertently deleted language in § 261.2(e)(1)(iii) that applies to other industrial sectors recycling secondary materials. The Agency did not intend to eliminate the long-standing regulatory exclusions for other industrial sectors, and indeed effectively stated that the provision was not being amended for other industry sectors, see 63 FR at 28583–584. We are therefore restoring the omitted text in this section.

2. Section 261.4

The Hazardous Waste Combustion Revised Standards published on June 19, 1998 (63 FR 33782) added a paragraph to § 261.4(a)(16), which inadvertently changed what was promulgated in the LDR Phase IV final rule. To avoid confusion, we are redesignating the language promulgated in § 261.4(a)(16) in the LDR Phase IV final rule as § 261.4(a)(17).

Section 261.4(a)(17) (as renumbered in this rule) identifies certain mineral processing secondary materials as subject to a conditional exclusion from subtitle C regulation as follows:

> Secondary materials * * * generated within the primary mineral processing industry from which minerals, acids, cyanide, water or other values are recovered by mineral processing.

As noted throughout the preamble, however, the same mineral processing secondary materials are also recovered

in beneficiation operations. See, e.g., 63 FR at 28578. EPA did not intend to restrict the scope of the conditional exclusion to recovery only in mineral processing operations. Id. Consequently, EPA is amending § 261.4(a)(17) to indicate that recovery of these secondary materials may occur in either mineral processing or beneficiation operations.

This same amendment is being made to § 261.4(b)(7)(iii), which sets out the conditions under which wastes from the co-processing of normal feedstock with mineral processing secondary materials remains exempt from subtitle C regulation under the Bevill Amendment. In relevant part, the rule states:

> A residue derived from co-processing mineral processing secondary materials with normal beneficiation raw materials remains excluded under paragraph (b) * * * if the owner or operator:
>
> (A) Processes at least 50 percent by weight normal beneficiation raw materials;

The regulation inadvertently neglected to address the comparable situation when Bevill residues come from mineral processing rather than beneficiation operations. EPA clearly indicates in the preamble that the provisions of paragraph (b)(7)(ii) also apply to co-processing mineral processing secondary materials in beneficiation units. See 63 FR at 28595; see also 54 FR at 36614, 16619–620, 36629 (Sept. 1, 1989); 54 FR at 15324–325, 15341 (April 17, 1989) (prior rulemakings where EPA indicated that these conditions apply). Consequently, EPA is adding clarifying language to § 261.4(b)(7)(iii) to affirm that both beneficiation and mineral processing operations are included.

3. Section 268.7

The tables in § 268.7(a) and (b), entitled ''Generator Paperwork Requirements Table'' and ''Treatment Facility Paperwork Requirements Table,'' are now erroneously missing certain checkmarks, which we are reinstating in today's rule. The LDR Phase IV final rule also added a line eight to the ''Generator Paperwork Requirements Table,'' and a line five to the ''Treatment Facility Paperwork Requirements Table,'' both for contaminated soil, which inadvertently erased the previous lines eight and five. We are correcting this oversight by reinstating the missing lines as nine and six, respectively.

4. Section 268.9

The language in § 268.9(d)(2) currently refers to language in § 268.7(b)(5), which has been renumbered as § 268.7(b)(4). Today's rule amends the language in § 268.9 to correct this miscitation. For more clarification of LDR certifications and how they apply to soil, see the discussion in section B.6.c. below.

5. Section 268.40

Today's rule also amends the treatment standard table found in § 268.40. The entry for P015 incorrectly describes this waste as ''beryllium dust''; the proper term is ''beryllium powder.'' Also, the entry for U408 gave the incorrect CAS number for 2,4,6-Tribromophenol. We are correcting these errors in today's rule. For other errors in the § 268.40 table, see sections V. and VI. below.

B. Clarifications to the LDR Phase IV Final Rule

1. Effective Dates

The Agency has received a number of questions about the dates when various provisions of the LDR Phase IV final rule become effective. A memorandum explaining in further detail the effective dates of the LDR Phase IV final rule is available in the RCRA docket for the rule, and is also available on the internet at: http://www.epa.gov/epaoswer/hazwaste/ldr/ldrmetal/memos/effectiv.pdf.

Part of the confusion over the compliance dates for the LDR Phase IV final rule resulted from EPA incorrectly referring to effective dates as ''compliance dates''. In the ''Effective Dates'' section in the preamble (see page 28556, middle column), the Agency lists four exceptions to the August 24, 1998 effective date for the rule. These exceptions are referred to as ''compliance dates'', when, in fact, they are effective dates.

Another point of clarification relates to the LDR Phase IV final rule amendments of the treatment standards for carbamate wastes, which were originally promulgated in the LDR Phase III final rule on April 8, 1996 (61 FR 15566). The LDR Phase IV amendments went into effect August 24, 1998. However, on September 4, 1998, the Agency changed the compliance dates for the LDR Phase IV carbamate treatment standards. If you have any questions related to compliance with the carbamate treatment standards, we direct you to the Emergency Revision of the Land Disposal Restrictions Treatment Standards for Listed Hazardous Wastes from Carbamate Production, which was published on September 4, 1998 (63 FR 172).

2. Waste as Fill

In the May 12, 1997 second supplemental proposed rule, EPA raised the issue of prohibiting the use of hazardous waste as fill material unless it was demonstrated to the Agency (or authorized State) that the use of the waste minimized threats to human health and the environment (see 62 FR 26061). The Agency did not finalize this issue in the LDR Phase IV final rule, but the proposal remains pending and awaiting EPA further action.

3. Cement Kiln Dust

EPA states at 63 FR at 28600/3 that:

> The Agency is aware that both cement kiln[s] and aggregate kilns may both burn hazardous wast[e] fuels and that the dusts from air pollution control devices are often blended into final products. Under existing regulations, if these dusts resulting from burning listed hazardous waste fuels are blended into products that are used on the land, the product would be subject to RCRA's 'derived from' rules. * * *''

The second sentence refers to a situation where the Bevill amendment does not apply to the residue from burning the hazardous waste derived fuel. The overall sense and intent of this section of the preamble remains that EPA wishes to consider cement kiln dust and dust from lightweight aggregate kilns (including dusts from kilns burning hazardous waste as fuels) in the same fashion because they are similar materials managed in similar manners.

4. D004 Treatment Standards

Some confusion also apparently exists as to whether the Universal Treatment Standards (UTS) apply to D004 arsenic wastes. In the preamble to the LDR Phase IV final rule, we state that the UTS apply to both wastewater and nonwastewater forms of the TC metal wastes. But a parenthetical then states that, for TC arsenic wastes, the UTS applies to the wastewater form only. The Agency unfortunately has caused confusion by this parenthetical language. The parenthetical only meant to explain that we were revising or replacing the standard solely for the nonwastewater form of arsenic in LDR Phase IV. We did not intend by the parenthetical to suggest that the wastewater form of arsenic had changed or been eliminated, or that the UTS do not apply. The existing standard for the wastewater form of arsenic was and remains the UTS. Therefore, the UTS have and will continue to apply to D004 arsenic wastes in both forms.

5. TC Metal Standards and Mixed Wastes

In the preamble to the final rule, EPA refers to characteristic metal mixed wastes that were previously stabilized to meet the then-existing LDR

requirements and that are now being stored prior to disposal. We indicate that these mixed wastes do not have to be re-treated to meet the revised treatment standards prior to disposal (63 FR 28575–28576). Mixed wastes are those that are both radioactive and hazardous. Although we believe that the preamble is clear, EPA has received a number of inquiries on this point. The Agency wishes to reiterate that, for the reasons explained in the LDR Phase IV preamble, if mixed wastes that are characteristically hazardous for metals were treated via stabilization to the old treatment standards before the effective date of the LDR Phase IV rule, these wastes do not need to be re-treated to meet the new treatment standards even if land disposal of the waste occurs after the effective date of the LDR Phase IV rule. Wastes previously treated by methods other than stabilization will have to be re-treated, as indicated clearly in the LDR Phase IV preamble, unless a site-specific variance is granted. Please note that the preamble further indicates EPA's amenability to grant such variances where, for example, there is risk of re-exposure to radiation. See 63 FR at 28576.

6. Soil Issues

EPA has received numerous questions about the alternative soil treatment standards. Two important questions and their answers appear below. Other questions will be handled through regular information channels, such as the RCRA Hotline at 1–800–424–9346. We also wish to remind readers generally that before receiving authorization for the soil treatment standards, states authorized for other portions of the LDR program may, for contaminated soil, use state waivers or other state authorities to waive the duty to comply with the LDR treatment standards for pure hazardous waste and allow, instead, compliance with the soil treatment standards. This is discussed more fully in the guidance memorandum mentioned above on LDR Phase IV rule effective dates.

a. What are the certification requirements for decharacterized soil? The certification requirements for decharacterized soil are similar to the requirements for decharacterized wastes. The certification language found in § 268.7(b)(4) is to be used if underlying hazardous constituents in decharacterized soil have been treated, either to meet the 90% reduction or the ten times UTS provisions in the soil treatment standards. If underlying hazardous constituents in decharacterized soil have not been treated and are above the 10 X UTS soil standard, the soil still requires treatment. In this case, the revised certification language found in § 268.7(b)(4)(iv) must be used instead. See 63 FR at 28620.

b. If constituents of concern in a hazardous contaminated soil have a specified method of treatment, can a facility still use the alternative soil treatment standards? In interpreting the alternative soil treatment standards found at § 268.49(c)(3), questions have arisen, particularly with respect to: (1) use of soil treatment standards where the only constituents of concern are nonanalyzable, and (2) situations in which both analyzable and non-analyzable constituents are present. The table below details the appropriate implementation of the language in § 268.49(c)(3), based on language from the preamble to the proposed and final rules with respect to contaminated soils containing both analyzable and nonanalyzable constituents. Readers should note that the following information only applies to constituents of concern present in a hazardous contaminated soil that must meet LDRs before land disposal.

If these constituents are * * *	And if these constituents * * *	Then soils contaminated with these constituents meet LDR treatment requirements when you * * *
Nonanalyzable only	Have a method of treatment specified in § 268.40	Treat all of these constituents using the treatment method[s] specified in § 268.40.
Analyzable and nonanalyzable.	Are organic compounds	Treat analyzable constituents to numerical soil treatment levels; no need to separately treat nonanalyzable constituents using method specified in § 268.40.
analyzable only	Have a method of treatment specified in § 268.40 AND ALSO a concentration-based limit in the § 268.48 UTS table.	Treat each constituent to numerical soil treatment levels.
	Have only concentration based limits in § 268.40 and § 268.48.	Treat each constituent to numerical soil treatment levels.

The preambles to both the final and proposed rules on contaminated soils make clear that EPA intended to allow treatment of analyzable constituents to serve as a surrogate for treating unanalyzable constituents only when the analyzable and unanalyzable constituents are both organics. The Phase IV preamble thus states that ''[i]n situations where contaminated soil contains both analyzable and nonanalyzable organic constituents, treating the analyzable constituents to meet the soil treatment standards is also reasonably expected to provide adequate treatment of nonanalyzable constituents.'' 63 FR at 28609 (emphasis added). This sentence indicates that it is reasonable to expect that treatment for analyzable organic constituents will be sufficiently effective for other organic, but nonanalyzable, constituents. See also, Phase II proposal, 58 FR at 48124 (col. 2) (Sept. 14, 1993) (likewise stating that the principle of treating only analyzable constituents applies only where analyzable and nonanalyzable constituents are both organics). We are accordingly amending the language of the rule so that it matches these preamble explanations.

This leaves unaddressed in the rule situations (which may or may not actually exist) where analyzable and unanalyzable hazardous constituents are not both organics. If the situation exists, it would not be reasonable to assume in all situations that organic treatment would serve as a surrogate for inorganic or metal treatment, or vice versa. Should the situation arise, EPA believes it should be addressed on a site-specific basis. The relevant factors to be considered include the types of hazardous constituents, their concentrations (for the analyzable constituents), and their amenability to common treatment.

c. What are nonanalyzable constituents? A nonanalyzable constituent is any constituent that does not have appropriate test methods or chemical standards to properly measure compliance with LDR concentration-based standards. A constituent is nonanalyzable under LDR regulation when (1) the appropriate § 268.40 listing

specifies a treatment technology, and (2) there is no concentration-based limit in the § 268.48 UTS table. We note, simply for technical accuracy, that the Phase IV preamble (63 FR 28609, col. 2) refers in a parenthetical statement to nonanalyzable constituents as belonging only to P and U waste codes. That preamble parenthetical is not entirely correct. A limited number of organic nonanalyzable constituents are also regulated under K and F waste codes. This clarification does not affect implementation of § 268.49(c)(3) in any way.

7. Intentional Mixing of Hazardous Waste With Soil or Debris

It is illegal to add soil or debris to a hazardous waste to change the waste's treatment classification to soil or debris and thereby to falsely claim eligibility for the alternative treatment standards for soil or debris. Put another way, addition of soil or debris to a hazardous waste does not change that waste into soil or debris for purposes of LDR treatment. As the Agency stated in the May 26, 1998 preamble, ''[A]ny deliberate mixing of prohibited hazardous waste with soil in order to change its treatment classification (i.e. from waste to contaminated soil) is illegal. Existing regulations concerning impermissible dilution already make this point.'' 63 FR at 28621. The conduct is impermissible dilution because it adds a diluting medium—the soil—that neither contributes to effective treatment nor represents a bona fide substitute for adequate treatment. Id.

EPA further made clear that this conduct subjects generators to civil and criminal penalties. 63 FR at 28621. In addition, the impermissibly diluted waste remains subject to the original treatment standard, ''so no benefit in terms of reduced treatment would occur.'' Id.

EPA had earlier established the same principle for debris: ''[a]lthough EPA is classifying mixtures that are predominantly debris as debris, this does not mean that debris can be deliberately mixed with other wastes in order to change their treatment classification. Such mixing is impermissible dilution under § 268.3 since it is a substitute for adequate treatment.'' 57 FR at 37224 (Aug. 18, 1992); see also 57 FR at 37243 (''if debris is intentionally mixed with contaminated soil or hazardous waste (e.g. after excavation), and the mixture is regulated as debris by the application of the mixture principle and subsequently immobilized, prohibited sham mixing has occurred'').

To ensure that there is no possibility of misunderstanding current law, EPA has decided to amend the definitions in § 268.2 to reflect more directly the preamble language stating that intentional addition of soil or debris to hazardous waste is impermissible. Currently, the definitions of ''soil'' and ''debris'', respectively state that soil or debris is ''made up primarily of soil'' or ''primarily of debris.'' 40 CFR § 268.2 (k) and (g). To remove any possible (albeit unfounded, given the existence of the dilution prohibition in § 268.3 and the preamble language quoted above) confusion regarding the term ''primarily'' in the rules, EPA is incorporating language directly into the respective definitions that states that deliberate mixing of process waste to soil or debris that changes a treatment classification is impermissible dilution. These additions merely incorporate existing preamble text into regulations and do not establish any new principles. Thus, today's correction is at most an interpretive rule because EPA's existing interpretations are being codified as clarifications to the definitions of soil and debris and to the existing dilution prohibition in § 268.3. Moreover, no new obligations are created because existing regulations—viz., the dilution prohibition in § 268.3—already make the conduct illegal. Whether the change is a technical correction or an interpretive rule, no opportunity for notice and comment is required. 5 U.S.C. § 553(b).

8. Treatment Residuals and Point of Generation of a New Hazardous Waste for LDR Purposes

The Agency has received several inquiries concerning treating TC metal wastes and the potential for finding underlying hazardous constituents at levels above the UTS in the treatment residuals that were either not present in the waste prior to treatment or may have been present but only at levels below the UTS. This would occur, for example, if the treatment process is such that certain underlying hazardous constituents (UHCs) might be more concentrated in treatment residuals than in the original waste.

Two illustrative scenarios are useful. The first involves a D007 chromium waste that is incinerated. Trace quantities of lead are present in the original waste, but at levels below the UTS (thus, lead is not a UHC under 40 CFR § 268.2(i)). The resulting ash is no longer characteristic for chromium, but lead is now present at levels above the UTS. The second involves a D008 lead wastewater that contains no underlying hazardous constituents as generated, but that is treated with dithiocarbamate, a metal precipitating agent. Dithiocarbamate is also a hazardous constituent that appears on the list of potential UHCs in § 268.48. The dithiocarbamate assists the stabilization of the lead but, after treatment, is present at levels above the UTS in the treatment residuals.

In both of these cases, the treatment residuals (ash and sludge) demonstrate that the original waste is decharacterized. Under § 268.2(i), the only UHCs that must be treated and that must meet the Universal Treatment Standards (UTS) are those determined to be present above UTS levels in the original waste—either via testing or generator knowledge. Because the treatment process results in non-hazardous residuals, the treatment facility is not responsible for additional testing to determine if any different underlying hazardous constituents are added or created during the treatment process itself. Furthermore, only the original UHCs must meet the UTS.

However, if in either case the treatment residual is also characteristic by having constituents that are not only above the UTS level but also above the TC level, then the residual is a newly-generated hazardous waste for LDR purposes. This result is consistent with the definition of generator at § 260.10: ''Generator means any person, by site, whose act or process produces hazardous waste identified or listed in part 261 * * * '' The result is also consistent with the key LDR principle that hazardous wastes must meet LDR treatment standards to minimize threats before the wastes are land disposed. See, e.g., *Chemical Waste Management* v. *EPA*, 976 F. 2d 2, 16–18 (D.C. Cir. 1992) (treatment must include treatment for both characteristic property and for underlying hazardous constituents). For these reasons, the Agency regards generation of a new characteristic treatment residual as being a new point of generation for LDR purposes. This newly-formed hazardous waste would have to be treated to below the characteristic, and any underlying hazardous constituents would have to be treated to below their UTS levels.[1]

[1] This analysis is consistent with the so-called change of treatability group principle first stated at 55 FR at 22661, col. 2 (June 1, 1990). That principle states that LDR prohibitions remain attached to the initial waste as long as the waste remains within the same treatability group (normally wastewater or nonwastewater). Thus, if a characteristic wastewater is treated and a non-wastewater sludge is generated from the treatment process, the prohibition for the wastewater does not automatically apply to the sludge. Id. The situation discussed in the text above, however, involves the

Continued

Thus, in the first scenario above regarding a decharacterized waste with lead in the ash, if the lead is present in the ash at or above TC levels (i.e., a new D008 waste has been generated), the lead must be treated to UTS levels. Furthermore, the treater has generated the new hazardous waste for LDR purposes and is responsible for a new determination of UHCs that are present and that require treatment to UTS levels. The same is true in the second example if the dithiocarbamate treatment sludge is characteristic.

EPA notes further, however, that in determining whether a treatment process has generated a new hazardous waste for LDR purposes, the Agency looks to the entire treatment process, not to each component part. In general, as explained below, the determination of whether a new hazardous waste is generated—i.e., whether a new point of generation for LDR purposes is created—is made at the completion of the treatment process. Thus:

(i) For residuals that are the end product of a one-step treatment process or the end product of a treatment train, the treater has the obligation to ensure only that the original UHCs meet UTS standards and that the treatment residuals are not themselves characteristic. If a treatment residual in this scenario does not meet the treatment standards for the original characteristic (i.e., when treatment is ineffective or incomplete) and requires further treatment, EPA does not consider the treatment residue to be newly generated for LDR purposes. Such a treatment residue, however, cannot be land disposed until it meets the treatment standard applicable to the original waste. This situation would normally involve re-treating the waste residuals on-site. Any UHCs added or created by the treatment process are not required to be treated because there is no new point of generation for LDR purposes. However, as noted above, if the treatment residuals are themselves characteristic due to a new property (for example, the formerly characteristic chromium D007 waste is now characteristic only for D008 lead), then the treater must make a new determination of the UHCs present—either through knowledge or additional testing. This is the same obligation that attaches to any generator of a hazardous waste.

(ii) For treatment residuals that appear only at intermediate steps of a treatment train, there is no obligation to determine UHCs or to determine whether the residual is itself characteristic. Intermediate-step treatment residuals are not newly generated hazardous wastes for LDR purposes. Thus, even when an intermediate treatment residual is sent off-site for further treatment (such as incinerator ash going offsite for stabilization and landfilling), our current regulations at § 268.7(b)(5) require only that the UHCs identified at the LDR point of generation be identified. There is no such requirement for any new UHCs that may be added or created during the preceding steps of the treatment process.

9. Clarification of Footnote 7 in Preamble

LDR Phase IV, as mentioned earlier, deals with the status of mineral processing materials under the RCRA definition of solid waste at § 261.2. Footnote seven of the preamble to the LDR Phase IV final rule, as printed in the **Federal Register**, reads: ''EPA does note the potential anomaly that non-mineral processing secondary materials, at least for the moment, will be regulated in some cases stringently than those generated and reclaimed within the mineral processing industry.'' 63 FR at 28583 n. 7. This language reflects a printing error by the Office of Federal Register which erroneously omitted the word ''less'' before the word ''stringently'' in this sentence. The footnote thus should read: ''EPA does note the potential anomaly that non-mineral processing secondary materials, at least for the moment, will be regulated in some cases less stringently than those generated and reclaimed within the mineral processing industry.''

Of course, as EPA noted elsewhere in the rule, secondary materials within the mineral processing industry will be regulated in other instances less stringently than those from outside the industry (the principal example being characteristic spent materials being reclaimed). The main point, as expressed in the footnote, is that the new rules establish a separate solid waste classification scheme for the mineral processing industry that differs from the generic classification scheme set out in the remainder of § 261.2.

IV. Amendment to the August 31, 1998 Stay for Certain Zinc Micronutrient Fertilizers

On August 31, 1998, EPA issued an administrative stay of the Phase IV rule as it applies to zinc micronutrient fertilizers that are produced from hazardous wastes exhibiting the toxicity characteristic. 63 FR 46332. Although EPA clearly stated throughout the rule that the administrative stay applied to ''zinc micronutrient fertilizers,'' the regulatory language codifying the stay mistakenly refers instead to ''zinc-containing fertilizers.'' See 63 FR 46334, to be codified at 40 CFR § 268.40(i). There exists a remote possibility that there are fertilizers produced from toxicity characteristic hazardous wastes that do not utilize zinc as a micronutrient but otherwise contain zinc (possibly as a trace element without nutritive value). Since the administrative stay was not meant to apply to such (hypothetical) fertilizers, EPA is amending the regulatory language to cover only zinc micronutrient fertilizers, as intended.

V. Amendments to the September 4, 1998 Emergency Revision of the Treatment Standards for Listed Hazardous Wastes From Carbamate Production

The September 4, 1998 Emergency Revision of the LDR Treatment Standards for Listed Hazardous Wastes from Carbamate Production (63 FR 172) adds a paragraph (i) to § 268.40, which inadvertently replaced the existing paragraph (i) added by the Land Disposal Restrictions final rule published on August 31, 1998 (staying LDR metal standards for zinc micronutrient fertilizers). Today's rule redesignates the current paragraph (i) as paragraph (j), and reinserts the paragraph (i) from the August 31, 1998 rule (as additionally amended in this correction notice, see section IV above). The September 4, 1998 rule also inadvertently changes footnotes eight and 11 to the table of treatment standards found in § 268.40. The correct footnotes are reinstated in today's rule.

A more significant error in the September 4, 1998 Emergency Rule is the removal of footnote six for all constituents listed in the table of Universal Treatment Standards found in § 268.48. In doing so, the rule mistakenly changes the status of certain carbamate constituents, which should not be underlying hazardous constituents until their newly revised treatment standards go into effect on March 4, 1999. By removing the footnote, these carbamate constituents are considered underlying hazardous constituents as of September 4, 1998, the effective date of the Emergency Rule. This was and is not the Agency's intention, and we are therefore reinstating the footnote with the correct date of March 4, 1999.

status for this hypothetical sludge if it itself exhibits a characteristic of hazardous waste. EPA views such a characteristic sludge as being newly generated for LDR purposes.

The treatment standards for K159 in the Table of Treatment Standards for Hazardous Wastes in § 268.40 are currently incorrect. The standards were and should be those promulgated in the LDR Phase III final rule (61 FR 15566, April 8, 1996). However, those standards were inadvertently and mistakenly revised in a technical correction on February 19, 1997 (62 FR 7502). Today's rule reinstates the correct treatment standards for K159 in the § 268.40 table.

Finally, today's rule also corrects: (1) the nonwastewater standard for oxamyl, which was listed incorrectly in the entry for P194; and (2) the CAS numbers for acetophenone and triethylamine, which were listed incorrectly in the entries for K156 and U404, respectively.

VI. Amendment to the September 24, 1998 Revision of the Treatment Standards for Spent Potliners From Primary Aluminum Reduction (K088)

On September 24, 1998 EPA promulgated revised LDR treatment standards for waste code K088. The rule changes the nonwastewater standard for arsenic in K088 from 5.0 mg/l TCLP to 26.1 mg/kg total, and also changes the nonwastewater standard for fluoride in K088 from 48 mg/l TCLP to NA. The wastewater standard for fluoride is unaffected by the rule. (That standard also is not affected by the court's rationale in *Columbia Falls Aluminum Co.* v. *EPA*, 139 F. 3d 914, 922–23 (D.C. Cir. 1998) because the standard for fluoride wastewaters does not involve the use of the TCLP.) Unfortunately, the final rule inadvertently omitted fluoride, and its treatment standards, from the entry for K088 in the table of treatment standards in § 268.40. Because of this omission, the change to the nonwastewater standard for fluoride was not codified. Today we are restoring fluoride and its revised standards in the entry for K088 in the § 268.40 table.

VII. Analysis Under Executive Order 12866, Executive Order 12875, Executive Order 12898, Executive Order 13045, Executive Order 13084, the Unfunded Mandates Reform Act of 1995, the Regulatory Flexibility Act, and the Paperwork Reduction Act

Under Executive Order 12866 (58 FR 51735, October 4, 1993), this action is not a ''significant regulatory action'' and is therefore not subject to review by the Office of Management and Budget. In addition, this action does not impose any enforceable duty, contain any unfunded mandate, or impose any significant or unique impact on small governments as described in the Unfunded Mandates Reform Act of 1995 (Pub. L. 104–4). This rule also does not require prior consultation with State, local, and tribal government officials as specified by Executive Order 12875 (58 FR 58093, October 28, 1993) or Executive Order 13084 (63 FR 27655, May 10, 1998), or involve special consideration of environmental justice related issues as required by Executive Order 12898 (59 FR 7629, February 16, 1994). Because this action is not subject to notice-and-comment requirements under the Administrative Procedure Act or any other statute, it is not subject to the regulatory flexibility provisions of the Regulatory Flexibility Act (5 U.S.C. 601 *et seq.*). This rule also is not subject to Executive Order 13045 (62 FR 19885, April 23, 1997) because EPA interprets E.O. 13045 as applying only to those regulatory actions that are based on health or safety risks, such that the analysis required under section 5–501 of the Order has the potential to influence the regulation. This rule is not subject to E.O. 13045 because it does not establish an environmental standard intended to mitigate health or safety risks. EPA's compliance with these statutes and Executive Orders for the underlying rule is discussed in the May 12, 1997, the May 26, 1998, the August 31, 1998, the September 4, 1998, and the September 24, 1998 **Federal Register** notices.

VIII. Submission to Congress and the General Accounting Office

The Congressional Review Act, 5 U.S.C. 801 *et seq.*, as added by the Small Business Regulatory Enforcement Fairness Act of 1996, generally provides that before a rule may take effect, the agency promulgating the rule must submit a rule report, which includes a copy of the rule, to each House of the Congress and to the Comptroller General of the United States. Section 808 allows the issuing agency to make a good cause finding that notice and public procedure is impracticable, unnecessary or contrary to the public interest. This determination must be supported by a brief statement. 5 U.S.C. 808(2). As stated previously, EPA has made such a good cause finding, including the reasons therefor, and established an effective date of May 11, 1999. EPA will submit a report containing this rule and other required information to the U.S. Senate, the U.S. House of Representatives, and the Comptroller General of the United States prior to publication of the rule in the **Federal Register**. This action is not a ''major rule'' as defined by 5 U.S.C. 804(2).

IX. Immediate Effective Date

EPA is making this rule effective immediately. The rule adopts corrections which are purely technical in that they correct outright printing errors, or are manifestly inconsistent with the Agency's stated intent. Comment on such changes is unnecessary, within the meaning of 5 U.S.C. 553(b)(3)(B). For the same reasons, there is good cause to make the rule effective immediately pursuant to 5 U.S.C. 553(d)(3).

List of Subjects

40 CFR Part 261

Environmental protection, Hazardous waste, Recycling, Reporting and recordkeeping requirements.

40 CFR Part 262

Hazardous waste, Labeling, Manifest, Reporting and recordkeeping requirements.

40 CFR Part 268

Hazardous waste, Reporting and recordkeeping requirements.

Dated: April 20, 1999.

Timothy Fields, Jr.,

Acting Assistant Administrator.

For the reasons set forth in the preamble, title 40, chapter I of the Code of Federal Regulations is amended as follows:

PART 261—IDENTIFICATION AND LISTING OF HAZARDOUS WASTE

Subpart A—General

1. The authority citation for Part 261 continues to read as follows:

Authority: 42 U.S.C. 6905, 6912(a), 6921, 6922, 6924(y), and 6938.

2. Section 261.2 is amended by revising paragraph (c)(3), in Table 1 in paragraph (c)(4) by revising the reference ''261.4(a)(15)'' in the heading of column 3 to read ''261.4(a)(17)'', and paragraph (e)(1)(iii) is revised to read as follows:

§ 261.2 Definition of solid waste.

* * * * *

(c) * * *

(3) *Reclaimed.* Materials noted with a ''*'' in column 3 of Table 1 are solid wastes when reclaimed (except as provided under 40 CFR 261.4(a)(17)). Materials noted with a ''---'' in column 3 of Table 1 are not solid wastes when reclaimed (except as provided under 40 CFR 261.4(a)(17)).

* * * * *

(e) * * *

(1) * * *

(iii) Returned to the original process from which they are generated, without first being reclaimed or land disposed. The material must be returned as a substitute for feedstock materials. In cases where the original process to which the material is returned is a secondary process, the materials must be managed such that there is no placement on the land. In cases where the materials are generated and reclaimed within the primary mineral processing industry, the conditions of the exclusion found at § 261.4(a)(17) apply rather than this paragraph.

3. Section 261.4 is amended by redesignating the first paragraph (a)(16) as (a)(17), and by revising paragraphs (a)(17) introductory text, (a)(17)(v), and (b)(7)(iii) introductory text and (b)(7)(iii)(A) to read as follows:

§ 261.4 Exclusions.

(a) * * *

(17) Secondary materials (i.e., sludges, by-products, and spent materials as defined in § 261.1) (other than hazardous wastes listed in subpart D of this part) generated within the primary mineral processing industry from which minerals, acids, cyanide, water or other values are recovered by mineral processing or by beneficiation, provided that:

* * * * *

(v) The owner or operator provides a notice to the Regional Administrator or State Director, identifying the following information: the types of materials to be recycled; the type and location of the storage units and recycling processes; and the annual quantities expected to be placed in non land-based units. This notification must be updated when there is a change in the type of materials recycled or the location of the recycling process.

* * * * *

(b) * * *

(7) * * *

(iii) A residue derived from co-processing mineral processing secondary materials with normal beneficiation raw materials or with normal mineral processing raw materials remains excluded under paragraph (b) of this section if the owner or operator:

(A) Processes at least 50 percent by weight normal beneficiation raw materials or normal mineral processing raw materials; and,

* * * * *

PART 262—STANDARDS APPLICABLE TO GENERATORS OF HAZARDOUS WASTE

4. The authority citation for part 262 continues to read as follows:

Authority: 42 U.S.C. 6906, 6912, 6922–6925, 6937, and 6938.

Subpart C—Pre-Transport Requirements

5. Section 262.34 is amended by revising paragraph (d)(4) to read as follows:

§ 262.34 Accumulation time.

* * * * *

(d) * * *

(4) The generator complies with the requirements of paragraphs (a)(2) and (a)(3) of this section, the requirements of subpart C of part 265, the requirements of 40 CFR 268.7(a)(5); and

* * * * *

PART 268—LAND DISPOSAL RESTRICTIONS

6. The authority citation for part 268 continues to read as follows:

Authority: 42 U.S.C. 6905, 6912(a), 6921, and 6924.

Subpart A—General

7. Section 268.2 is amended by revising paragraphs (h) and (k) to read as follows:

§ 268.2 Definitions applicable in this part.

* * * * *

(h) Hazardous debris means debris that contains a hazardous waste listed in subpart D of part 261 of this chapter, or that exhibits a characteristic of hazardous waste identified in subpart C of part 261 of this chapter. Any deliberate mixing of prohibited hazardous waste with debris that changes its treatment classification (i.e., from waste to hazardous debris) is not allowed under the dilution prohibition in § 268.3.

* * * * *

(k) *Soil* means unconsolidated earth material composing the superficial geologic strata (material overlying bedrock), consisting of clay, silt, sand, or gravel size particles as classified by the U.S. Natural Resources Conservation Service, or a mixture of such materials with liquids, sludges or solids which is inseparable by simple mechanical removal processes and is made up primarily of soil by volume based on visual inspection. Any deliberate mixing of prohibited hazardous waste with soil that changes its treatment classification (i.e., from waste to contaminated soil) is not allowed under the dilution prohibition in § 268.3.

8. Section 268.7 is amended by revising entries 1, 3, and 8 to the table entitled ''Generator Paperwork Requirements Table'' in paragraph (a)(4), by revising entry 1 to the table entitled ''Treatment Facility Paperwork Requirements Table'' in paragraph (b)(3)(ii), and by revising paragraph (b)(4)(iv) to read as follows:

§ 268.7 Testing, tracking, and recordkeeping requirements for generators, treaters, and disposal facilities.

* * * * *

(a) * * *

(4) * * *

GENERATOR PAPERWORK REQUIREMENTS TABLE

Required information	§ 268.7(a)(2)	§ 268.7(a)(3)	§ 268.7(a)(4)	§ 268.7(a)(9)
1. EPA Hazardous Waste Numbers and Manifest Number of first shipment	✔	✔	✔	✔
* * * *	*	*	*	
3. The waste is subject to the LDRs. The constituents of concern for F001-F005, and F039, and underlying hazardous constituents in characteristic wastes, unless the waste will be treated and monitored for all constituents. If all constituents will be treated and monitored, there is no need to put them all on the LDR notice	✔	✔		

GENERATOR PAPERWORK REQUIREMENTS TABLE—Continued

Required information	§ 268.7(a)(2)	§ 268.7(a)(3)	§ 268.7(a)(4)	§ 268.7(a)(9)
* * * *	*	*	*	
8. For contaminated soil subject to LDRs as provided in § 268.49(a), the constituents subject to treatment as described in § 268.49(d), and the following statement: This contaminated soil [does/does not] contain listed hazardous waste and [does/does not] exhibit a characteristic of hazardous waste and [is subject to/complies with the soil treatment standards as provided by § 268.49(c) or the universal treatment standards	✔	✔		
9. A certification is needed (see applicable section for exact wording)		✔		✔

* * * * *

(b) * * *

(3) * * *

(ii) * * *

TREATMENT FACILITY PAPERWORK REQUIREMENTS TABLE

Required Information	§ 268.7(b)
1. EPA Hazardous Waste Numbers and Manifest Number of first shipment	✔
* * * * * * *	
6. A certification is needed (see applicable section for exact wording)	✔

* * * * *

(4) * * *

(iv) For characteristic wastes that are subject to the treatment standards in § 268.40 (other than those expressed as a method of treatment), or § 268.49, and that contain underlying hazardous constituents as defined in § 268.2(i); if these wastes are treated on-site to remove the hazardous characteristic; and are then sent off-site for treatment of underlying hazardous constituents, the certification must state the following:

I certify under penalty of law that the waste has been treated in accordance with the requirements of 40 CFR 268.40 or 268.49 to remove the hazardous characteristic. This decharacterized waste contains underlying hazardous constituents that require further treatment to meet treatment standards. I am aware that there are significant penalties for submitting a false certification, including the possibility of fine and imprisonment.

* * * * *

9. Section 268.9 is amended by revising paragraphs (d)(2) introductory text and (d)(2)(i) to read as follows:

§ 268.9 Special rules regarding wastes that exhibit a characteristic.

* * * * *

(d) * * *

(2) The certification must be signed by an authorized representative and must state the language found in § 268.7(b)(4).

(i) If treatment removes the characteristic but does not meet standards applicable to underlying hazardous constituents, then the certification found in § 268.7(b)(4)(iv) applies.

* * * * *

10. Section 268.40 is amended by redesignating the first paragraph (i) as paragraph (j), by revising paragraph (i), and the table at the end of the section is amended by revising the entries for K088, K156, K159, P194, U404 and U408, and footnotes 8 and 11 to read as follows:

§ 268.40 Applicability of treatment standards.

* * * * *

(i) Zinc micronutrient fertilizers that are produced for the general public's use and that are produced from or contain recycled characteristic hazardous wastes (D004–D011) are subject to the applicable treatment standards in § 268.41 contained in the 40 CFR, parts 260 to 299, edition revised as of July 1, 1990.

* * * * *

TREATMENT STANDARDS FOR HAZARDOUS WASTES

[Note: NA means not applicable.]

Waste code	Waste description and treatment/regulatory subcategory [1]	Regulated hazardous constituent		Wastewaters	Nonwastewaters
		Common name	CAS [2] No.	Concentration in mg/l [3]; or technology code [4]	Concentration in mg/kg [5] unless noted as "mg/l TCLP"; or technology code
K088	Spent potliners from primary aluminum reduction.	Acenaphthene	83–32–9	0.059	3.4
		Anthracene	120–12–7	0.059	3.4
		Benz(a)anthracene	56–55–3	0.059	3.4
		Benzo(a)pyrene	50–32–8	0.061	3.4
		Benzo(b)fluoranthene	205–99–2	0.11	6.8
		Benzo(k)fluoranthene	207–08–9	0.11	6.8
		Benzo(g,h,i)perylene	191–24–2	0.0055	1.8
		Chrysene	218–01–9	0.059	3.4
		Dibenz(a,h)anthracene	53–70–3	0.055	8.2
		Fluoranthene	206–44–0	0.068	3.4

TREATMENT STANDARDS FOR HAZARDOUS WASTES—Continued

[Note: NA means not applicable.]

Waste code	Waste description and treatment/regulatory subcategory [1]	Regulated hazardous constituent		Wastewaters	Nonwastewaters
		Common name	CAS [2] No.	Concentration in mg/l [3]; or technology code [4]	Concentration in mg/kg [5] unless noted as "mg/l TCLP"; or technology code
	.....	Indeno(1,2,3,-c,d)pyrene	193–39–5	0.0055	3.4
	.....	Phenanthrene	85–01–8	0.059	5.6
	.....	Pyrene	129–00–0	0.067	8.2
	.....	Antimony	7440–36–0	1.9	1.15 mg/l TCLP
	.....	Arsenic	7440–38–2	1.4	26.1 mg/l TCLP
	.....	Barium	7440–39–3	1.2	21 mg/l TCLP
	.....	Beryllium	7440–41–7	0.82	1.22 mg/l TCLP
	.....	Cadmium	7440–43–9	0.69	0.11 mg/l TCLP
	.....	Chromium (Total)	7440–47–3	2.77	0.60 mg/l TCLP
	.....	Lead	7439–92–1	0.69	0.75 mg/l TCLP
	.....	Mercury	7439–97–6	0.15	0.025 mg/l TCLP
	.....	Nickel	7440–02–0	3.98	11 mg/l TCLP
	.....	Selenium	7782–49–2	0.82	5.7 mg/l TCLP
	.....	Silver	7440–22–4	0.43	0.14 mg/l TCLP
	.....	Cyanide (Total) [7]	57–12–5	1.2	590
	.....	Cyanide (Amenable) [7]	57–12–5	0.86	30
	.....	Fluoride	16984–48–8	35	NA
*	*	* *	*	*	*
K156	Organic waste (including heavy ends, still bottoms, light ends, spent solvents, filtrates, and decantates) from the production of carbamates and carbamoyl oximes.[10].	Acetonitrile	75–05–8	5.6	1.8
	.....	Acetophenone	98–86–2	0.010	9.7
	.....	Aniline	62–53–3	0.81	14
	.....	Benomyl	17804–35–2	0.056	1.4
	.....	Benzene	71–43–2	0.14	10
	.....	Carbaryl	63–25–2	0.006	0.14
	.....	Carbenzadim	10605–21–7	0.056	1.4
	.....	Carbofuran	1563–66–2	0.006	0.14
	.....	Carbosulfan	55285–14–8	0.028	1.4
	.....	Chlorobenzene	108–90–7	0.057	6.0
	.....	Chloroform	67–66–3	0.046	6.0
	.....	o-Dichlorobenzene	95–50–1	0.088	6.0
	.....	Methomyl	16752–77–5	0.028	0.14
	.....	Methylene chloride	75–09–2	0.089	30
	.....	Methyl ethyl ketone	78–93–3	0.28	36
	.....	Naphthalene	91–20–3	0.059	5.6
	.....	Phenol	108–95–2	0.039	6.2
	.....	Pyridine	110–86–1	0.014	16
	.....	Toluene	108–88–3	0.080	10
	.....	Triethylamine	121–44–8	0.081	1.5
*	*	* *	*	*	*
K159	Organics from the treatment of thiocarbamate wastes.[10].	Benzene	71–43–2	0.14	10
	.....	Butylate	2008–41–5	0.042	1.4
	.....	EPTC (Eptam)	759–94–4	0.042	1.4
	.....	Molinate	2212–67–1	0.042	1.4
	.....	Pebulate	1114–71–2	0.042	1.4
	.....	Vernolate	1929–77–7	0.042	1.4
*	*	* *	*	*	*
P194	Oxamyl	Oxamyl	23135–22–0	0.056	0.28
*	*	* *	*	*	*
U404	Triethylamine	Triethylamine	121–44–8	0.081	1.5
*	*	* *	*	*	*
U408	2,4,6-Tribromophenol	2,4,6-Tribromophenol	118–79–6	0.035	7.4

TREATMENT STANDARDS FOR HAZARDOUS WASTES—Continued

[Note: NA means not applicable.]

Waste code	Waste description and treatment/regulatory subcategory [1]	Regulated hazardous constituent		Wastewaters	Nonwastewaters
		Common name	CAS [2] No.	Concentration in mg/l [3]; or technology code [4]	Concentration in mg/kg [5] unless noted as "mg/l TCLP"; or technology code
*	*	*	*	*	*	*

[1] The waste descriptions provided in this table do not replace waste descriptions in 40 CFR 261. Descriptions of Treatment/Regulatory Subcategories are provided, as needed, to distinguish between applicability of different standards.

[2] CAS means Chemical Abstract Services. When the waste code and/or regulated constituents are described as a combination of a chemical with its salts and/or esters, the CAS number is given for the parent compound only.

[3] Concentration standards for wastewaters are expressed in mg/l and are based on analysis of composite samples.

[4] All treatment standards expressed as a Technology Code or combination of Technology Codes are explained in detail in 40 CFR 268.42 Table 1—Technology Codes and Descriptions of Technology-Based Standards.

[5] Except for Metals (EP or TCLP) and Cyanides (Total and Amenable) the nonwastewater treatment standards expressed as a concentration were established, in part, based upon incineration in units operated in accordance with the technical requirements of 40 CFR Part 264 Subpart O or Part 265 Subpart O, or based upon combustion in fuel substitution units operating in accordance with applicable technical requirements. A facility may comply with these treatment standards according to provisions in 40 CFR 268.40(d). All concentration standards for nonwastewaters are based on analysis of grab samples.

* * * * * * *

[7] Both Cyanides (Total) and Cyanides (Amenable) for nonwastewaters are to be analyzed using Method 9010 or 9012, found in "Test Methods for Evaluating Solid Waste, Physical/Chemical Methods," EPA Publication SW–846, as incorporated by reference in 40 CFR 260.11, with a sample size of 10 grams and a distillation time of one hour and 15 minutes.

* * * * * * *

[8] These wastes, when rendered nonhazardous and then subsequently managed in CWA, or CWA-equivalent systems, are not subject to treatment standards. (See § 268.1(c)(3) and (4)).

* * * * * * *

[10] The treatment standard for this waste may be satisfied by either meeting the constituent concentrations in this table or by treating the waste by the specified technologies: combustion, as defined by the technology code CMBST at § 268.42 Table 1 of this Part, for nonwastewaters; and, biodegradation as defined by the technology code BIODG, carbon adsorption as defined by the technology code CARBN, chemical oxidation as defined by the technology code CHOXD, or combustion as defined as technology code CMBST at § 268.42 Table 1 of this Part, for wastewaters.

[11] For these wastes, the definition of CMBST is limited to: (1) combustion units operating under 40 CFR 266, (2) combustion units permitted under 40 CFR Part 264, Subpart O, or (3) combustion units operating under 40 CFR 265, Subpart O, which have obtained a determination of equivalent treatment under 268.42 (b).

11. In § 268.48, the table in paragraph (a) is amended by adding footnote number "6" in column one, under the heading *Regulated Constituents/Common Name,* after the following chemical names: "Aldicarb sulfone," "Barban," "Bendiocarb," "Benomyl," "Butylate," "Carbaryl," "Carbenzadim," "Carbofuran," "Carbofuran phenol," "Carbosulfan," "m-Cumenyl methylcarbamate," "Dithiocarbamates (total)," "EPTC," "Formetanate hydrochloride," "Methiocarb," "Methomyl," "Metolcarb," "Mexacarbate," "Molinate," "Oxamyl," "Pebulate," "Physostigmine," "Physostigmine salicylate," "Promecarb," "Propham," "Propoxur," "Prosulfocarb," "Thiodicarb," "Thiophanate-methyl," "Triallate," "Triethylamine," and "Vernolate;" and by adding footnote 6 to read as follows:

§ 268.48 Universal treatment standards.

(a) * * *

6. Between August 26, 1998 and March 4, 1999, these constituents are not "underlying hazardous constituents" as defined in § 268.2(i) of this part.

12. Section 268.49 is amended by revising paragraph (c)(3) as follows:

§ 268.49 Alternative LDR treatment standards for contaminated soil.

* * * * *

(c) * * *

(3) Soils that contain nonanalyzable constituents. In addition to the treatment requirements of paragraphs (c)(1) and (2) of this section, prior to land disposal, the following treatment is required for soils that contain nonanalyzable constituents:

(A) For soil that contains only analyzable and nonanalyzable organic constituents, treatment of the analyzable organic constituents to the levels specified in paragraphs (c)(1) and (2) of this section; or,

(B) For soil that contains only nonanalyzable constituents, treatment by the method(s) specified in § 268.42 for the waste contained in the soil.

[FR Doc. 99–11271 Filed 5–10–99; 8:45 am]

BILLING CODE 6560–50–P

Reader Aids

Federal Register

Vol. 64, No. 90

Tuesday, May 11, 1999

CUSTOMER SERVICE AND INFORMATION

Federal Register/Code of Federal Regulations

General Information, indexes and other finding aids	**202–523–5227**
Laws	**523–5227**
Presidential Documents	
Executive orders and proclamations	**523–5227**
The United States Government Manual	**523–5227**
Other Services	
Electronic and on-line services (voice)	**523–4534**
Privacy Act Compilation	**523–3187**
Public Laws Update Service (numbers, dates, etc.)	**523–6641**
TTY for the deaf-and-hard-of-hearing	**523–5229**

ELECTRONIC RESEARCH

World Wide Web

Full text of the daily Federal Register, CFR and other publications:

http://www.access.gpo.gov/nara

Federal Register information and research tools, including Public Inspection List, indexes, and links to GPO Access:

http://www.nara.gov/fedreg

E-mail

PENS (Public Law Electronic Notification Service) is an E-mail service that delivers information about recently enacted Public Laws. To subscribe, send E-mail to

listproc@lucky.fed.gov

with the text message:

subscribe publaws-l <firstname> <lastname>

Use listproc@lucky.fed.gov only to subscribe or unsubscribe to PENS. We cannot respond to specific inquiries at that address.

Reference questions. Send questions and comments about the Federal Register system to:

info@fedreg.nara.gov

The Federal Register staff cannot interpret specific documents or regulations.

FEDERAL REGISTER PAGES AND DATES, MAY

23531–23748 3
23749–24020 4
24021–24282 5
24283–24500 6
24501–24930 7
24931–25188 10
25189–25418 11

CFR PARTS AFFECTED DURING MAY

At the end of each month, the Office of the Federal Register publishes separately a List of CFR Sections Affected (LSA), which lists parts and sections affected by documents published since the revision date of each title.

3 CFR

Proclamations:
7189 24275
7190 24277
7191 24279
7192 24281
7193 25189
7194 25191

Executive Orders:
13088 (Amended by EO 13121) 24021
13121 24021
July 2, 1910 (Revoked in part by PLO 7388) 23856

Administration Orders:
Presidential Determination No. 99–22 of April 29, 1999 24501

5 CFR

330 24503
351 23531
532 23531

7 CFR

301 23749
457 24931
929 24023
979 23754
993 23759
1079 25193
1307 23532
1308 23532
1430 24933
1940 24476
1944 24476

Proposed Rules:
1412 24091

9 CFR

Proposed Rules:
Ch. I 23795

10 CFR

9 24936
50 23763

Proposed Rules:
1 24531
2 .....24092, 24531
7 24531
9 24531
19 24092
20 24092
21 24092
30 24092
32 23796
40 24092
50 24531
51 .....24092, 24531
52 24531
60 .....24092, 24531
61 24092
62 24531
63 24092
72 24531
75 24531
76 24531
100 24531
110 24531

12 CFR

960 24025

13 CFR

Proposed Rules:
121 23798

14 CFR

39 .....23763, 23766, 24028, 24029, 24031, 24033, 24034, 24505, 24507, 25194, 25197, 25198, 25200
71 .....23538, 23903, 24035, 24036, 24510, 24513
73 23768
97 .....24283, 24284

Proposed Rules:
39 .....23552, 24092, 24542, 24544, 24963, 24964, 25218
71 .....23805, 23806, 23807, 23808, 23809, 225220, 25221, 25222
108 23554

15 CFR

30 24942
746 24018

16 CFR

Proposed Rules:
453 24250

17 CFR

1 24038
17 24038
18 24038
150 24038
240 25144
249 25144
270 24488

Proposed Rules:
240 25153
249 25153
270 24489

21 CFR

178 24943
558 23539

Proposed Rules:
884 24967
1020 23811
1308 .....24094, 25407

24 CFR

Proposed Rules:
Ch. IX....24546
888....24866

25 CFR

Proposed Rules:
20....24296

26 CFR

Proposed Rules:
1....23554, 23811, 24096, 25223
20....23811
25....23811
31....23811
40....23811

27 CFR

Proposed Rules:
9....24308

28 CFR

Proposed Rules:
0....24972
16....24972
20....24972
50....24972
302....24547
551....24468

29 CFR

Proposed Rules:
2700....24547

30 CFR

943....23540
946....23542

Proposed Rules:
701....23811
724....23811
773....23811
774....23811
778....23811
842....23811
843....23811
846....23811

31 CFR

205....24242

Proposed Rules:
1....24454

32 CFR

290....25407

33 CFR

117....23545, 24944
165....24286, 24945, 24947
323....25120

Proposed Rules:
100....24979, 24980
165....23545, 24982, 24983, 24985, 24987

34 CFR

300....24862

37 CFR

251....25201

Proposed Rules:
1....25223
2....25223
3....25223
6....25223

38 CFR

4....25202
21....23769

Proposed Rules:
4....25246
17....23812

40 CFR

Ch. VII....25126
9....23906, 25126
35....23734
52....23774, 24949, 25210, 25214
60....24049, 24511
61....24288
63....24288, 24511
70....23777
81....24949
85....23906
86....23906
88....23906
180....24292
232....25120
261....25410
262....25410
268....25410
271....23780
300....24949
600....23906

Proposed Rules:
52....23813, 24117, 24119, 24549, 24988, 24989
70....23813
81....24123
271....23814, 25258
300....24990

42 CFR

498....24957

Proposed Rules:
405....24549
412....24716
413....24716
483....24716
485....24716

44 CFR

59....24256
61....24256
64....24512, 24957
65....24515, 24516
67....24517

Proposed Rules:
67....24550

45 CFR

Proposed Rules:
2505....25260

46 CFR

16....25407
500....23545
501....23545
502....23551
503....23545
504....23545
506....23545
507....23545
508....23545
514....23782
530....23782
535....23794
540....23545
545....23551
550....23551
551....23551
555....23551
560....23551
565....23551
571....23551
572....23794
582....23545
585....23551
586....23551
587....23551
588....23551

Proposed Rules:
356....24311

47 CFR

73....24522, 24523
74....24523

Proposed Rules:
1....23571
22....23571
24....23571
26....23571
27....23571
73....23571, 24565, 24566, 24567, 24996, 24997, 24998
74....23571
80....23571
87....23571
90....23571
95....23571
97....23571
101....23571

48 CFR

213....24528
225....24528, 24529
252....24528, 24529
715....25407
1815....25214
1816....25214
1819....25214
1852....25214

Proposed Rules:
16....24472
45....23982
48....24472
52....23982, 24472
215....23814

49 CFR

1....24959

Proposed Rules:
229....23816
231....23816
232....23816
360....24123
387....24123
390....24128
396....24128
605....23590

50 CFR

17....25216
226....24049
600....24062
648....24066
660....24062, 24078
679....24960, 25216

Proposed Rules:
17....25263
20....23742
226....24998

REMINDERS

The items in this list were editorially compiled as an aid to Federal Register users. Inclusion or exclusion from this list has no legal significance.

RULES GOING INTO EFFECT MAY 11, 1999

EDUCATION DEPARTMENT

Special education and rehabilitative services:

Children with disabilities and infants and toddlers with disabilities early intervention programs; published 3-12-99

ENVIRONMENTAL PROTECTION AGENCY

Hazardous waste:

Land disposal restrictions—

Wood preserving wastes, metal wastes, zinc micronutrient fertilizers et al.; published 5-11-99

FARM CREDIT ADMINISTRATION

Farm credit system:

Organization and disclosure to shareholders—

Bank director compensation limits; published 5-12-99

NATIONAL AERONAUTICS AND SPACE ADMINISTRATION

Acquisition regulations:

Contracting by negotiation; published 5-11-99

TRANSPORTATION DEPARTMENT

Federal Aviation Administration

Airworthiness directives:

Boeing; published 4-6-99

COMMENTS DUE NEXT WEEK

AGRICULTURE DEPARTMENT

Agricultural Marketing Service

Cotton research and promotion order:

Imported cotton and cotton content of imported products; supplemental assessment calculation; comments due by 5-19-99; published 4-19-99

Soybean promotion and research program; referendum; comments due by 5-17-99; published 4-16-99

AGRICULTURE DEPARTMENT

Animal and Plant Health Inspection Service

Interstate transportation of animals and animal products (quarantine):

Johne's disease in domestic animals; comments due by 5-21-99; published 3-22-99

Viruses, serums, toxins, etc.:

Packaging and labeling—

Veterinary biological products; comments due by 5-17-99; published 3-18-99

COMMERCE DEPARTMENT

National Oceanic and Atmospheric Administration

Fishery conservation and management:

West Coast States and Western Pacific fisheries—

Pacific Coast groundfish; comments due by 5-20-99; published 5-5-99

West Coast salmon; comments due by 5-17-99; published 5-5-99

COMMERCE DEPARTMENT

Patent and Trademark Office

Patent cases:

Interference proceedings; consideration of interlocutory rulings; comments due by 5-17-99; published 3-16-99

CONSUMER PRODUCT SAFETY COMMISSION

Bunk beds; safety standards; comments due by 5-17-99; published 3-3-99

ENVIRONMENTAL PROTECTION AGENCY

Air programs; approval and promulgation; State plans for designated facilities and pollutants:

Kentucky; comments due by 5-20-99; published 4-20-99

Air quality implementation plans; approval and promulgation; various States:

California; comments due by 5-17-99; published 4-16-99

Illinois; comments due by 5-17-99; published 4-16-99

Minnesota; comments due by 5-19-99; published 4-19-99

Ohio; comments due by 5-20-99; published 4-20-99

Pennsylvania; comments due by 5-17-99; published 4-16-99

Tennessee; comments due by 5-20-99; published 4-20-99

Texas; comments due by 5-20-99; published 4-20-99

Air quality planning purposes; designation of areas:

California; comments due by 5-19-99; published 5-5-99

Texas; comments due by 5-17-99; published 4-16-99

Pesticides; tolerances in food, animal feeds, and raw agricultural commodities:

Potato leaf roll virus resistance gene (orf1/orf2 gene); comments due by 5-17-99; published 3-17-99

Radiation protection programs:

Idaho National Engineering and Environmental Laboratory; waste characterization program; documents availability; comments due by 5-17-99; published 4-16-99

FEDERAL COMMUNICATIONS COMMISSION

Radio stations; table of assignments:

Iowa; comments due by 5-17-99; published 4-1-99

Louisiana; comments due by 5-17-99; published 4-1-99

Nevada; comments due by 5-17-99; published 4-1-99

New Mexico; comments due by 5-17-99; published 4-5-99

South Dakota; comments due by 5-17-99; published 4-1-99

Wyoming; comments due by 5-17-99; published 4-1-99

FEDERAL RETIREMENT THRIFT INVESTMENT BOARD

Thrift savings plan:

Funds withdrawal; methods; comments due by 5-21-99; published 3-22-99

FEDERAL TRADE COMMISSION

Industry guides:

Dog and cat food industry; comments due by 5-17-99; published 3-18-99

Dog and cat food industry; correction; comments due by 5-17-99; published 4-13-99

Law book industry; comments due by 5-17-99; published 3-18-99

Law book industry; correction; comments due by 5-17-99; published 4-13-99

HEALTH AND HUMAN SERVICES DEPARTMENT

Food and Drug Administration

Food for human consumption:

Irradiation in production, processing, and handling of food—

Foods treated with ionizing radiation; labeling requirements; comments due by 5-18-99; published 2-17-99

INTERIOR DEPARTMENT

Fish and Wildlife Service

Endangered and threatened species:

Findings on petitions, etc.—

San Diego ambrosia; comments due by 5-19-99; published 4-19-99

INTERIOR DEPARTMENT

Surface Mining Reclamation and Enforcement Office

Permanent program and abandoned mine land reclamation plan submissions:

North Dakota; comments due by 5-17-99; published 4-15-99

Ohio; comments due by 5-17-99; published 4-16-99

West Virginia; comments due by 5-20-99; published 4-20-99

NORTHEAST DAIRY COMPACT COMMISSION

Over-order price regulations:

Supply management program; hearing; comments due by 5-19-99; published 4-19-99

POSTAL SERVICE

International Mail Manual:

Priority Mail Global Guaranteed; enhanced expedited service from selected U.S. locations to selected European countries; comments due by 5-19-99; published 4-19-99

SECURITIES AND EXCHANGE COMMISSION

Securities:

Revised transfer agent form and related rule; comments due by 5-17-99; published 3-31-99

TRANSPORTATION DEPARTMENT

Air travel; nondiscrimination on basis of disability:

Wheelchairs and other assistive devices; compensation for damage; comments due by 5-18-99; published 2-17-99

TRANSPORTATION DEPARTMENT

Federal Aviation Administration

Airworthiness directives:

de Havilland; comments due by 5-21-99; published 4-23-99

Agusta S.p.A.; comments due by 5-18-99; published 3-19-99

AlliedSignal Inc.; comments due by 5-19-99; published 4-19-99

Boeing; comments due by 5-21-99; published 4-26-99

Fokker; comments due by 5-17-99; published 4-16-99

LET Aeronautical Works; comments due by 5-19-99; published 4-14-99

New Piper Aircraft, Inc.; comments due by 5-21-99; published 3-23-99

Pilatus Aircraft Ltd.; comments due by 5-19-99; published 4-14-99

Robinson Helicopter Co.; comments due by 5-21-99; published 3-22-99

Class E airspace; comments due by 5-17-99; published 4-1-99

Class E airspace; correction; comments due by 5-18-99; published 4-2-99

TRANSPORTATION DEPARTMENT

National Highway Traffic Safety Administration

Civil monetary penalties; inflation adjustment; comments due by 5-21-99; published 4-6-99

TREASURY DEPARTMENT

Customs Service

Financial and accounting procedures:

Duties, taxes, interest and fees; expanded methods of payment; comments due by 5-17-99; published 3-17-99

Vessels in foreign and domestic trades:

Vessel equipment temporarily landed for repair; comments due by 5-17-99; published 3-18-99

LIST OF PUBLIC LAWS

This is a continuing list of public bills from the current session of Congress which have become Federal laws. It may be used in conjunction with ''P L U S'' (Public Laws Update Service) on 202–523–6641. This list is also available online at http://www.nara.gov/fedreg.

The text of laws is not published in the **Federal Register** but may be ordered in ''slip law'' (individual pamphlet) form from the Superintendent of Documents, U.S. Government Printing Office, Washington, DC 20402 (phone, 202–512–1808). The text will also be made available on the Internet from GPO Access at http://www.access.gpo.gov/nara/index.html. Some laws may not yet be available.

S. 531/P.L. 106–26

To authorize the President to award a gold medal on behalf of the Congress to Rosa Parks in recognition of her contributions to the Nation. (May 4, 1999; 113 Stat. 50)

Last List May 4, 1999

Public Laws Electronic Notification Service (PENS)

PENS is a free electronic mail notification service of newly enacted public laws. To subscribe, send E-mail to **listproc@lucky.fed.gov** with the text message:

subscribe PUBLAWS-L Your Name.

Note: This service is strictly for E-mail notification of new public laws. The text of laws is not available through this service. **PENS** cannot respond to specific inquiries sent to this address.