3–8–99
Vol. 64 No. 44
Pages 10919–11372

federal register

Monday
March 8, 1999

Briefings on how to use the Federal Register
For information on briefings in Washington, DC, see announcement on the inside cover of this issue.

The **FEDERAL REGISTER** is published daily, Monday through Friday, except official holidays, by the Office of the Federal Register, National Archives and Records Administration, Washington, DC 20408, under the Federal Register Act (44 U.S.C. Ch. 15) and the regulations of the Administrative Committee of the Federal Register (1 CFR Ch. I). The Superintendent of Documents, U.S. Government Printing Office, Washington, DC 20402 is the exclusive distributor of the official edition.

The **Federal Register** provides a uniform system for making available to the public regulations and legal notices issued by Federal agencies. These include Presidential proclamations and Executive Orders, Federal agency documents having general applicability and legal effect, documents required to be published by act of Congress, and other Federal agency documents of public interest.

Documents are on file for public inspection in the Office of the Federal Register the day before they are published, unless the issuing agency requests earlier filing. For a list of documents currently on file for public inspection, see http://www.nara.gov/fedreg.

The seal of the National Archives and Records Administration authenticates the Federal Register as the official serial publication established under the Federal Register Act. Under 44 U.S.C. 1507, the contents of the **Federal Register** shall be judicially noticed.

The **Federal Register** is published in paper and on 24x microfiche. It is also available online at no charge as one of the databases on GPO Access, a service of the U.S. Government Printing Office.

The online edition of the **Federal Register** is issued under the authority of the Administrative Committee of the Federal Register as the official legal equivalent of the paper and microfiche editions (44 U.S.C. 4101 and 1 CFR 5.10). It is updated by 6 a.m. each day the **Federal Register** is published and it includes both text and graphics from Volume 59, Number 1 (January 2, 1994) forward.

GPO Access users can choose to retrieve online **Federal Register** documents as TEXT (ASCII text, graphics omitted), PDF (Adobe Portable Document Format, including full text and all graphics), or SUMMARY (abbreviated text) files. Users should carefully check retrieved material to ensure that documents were properly downloaded.

On the World Wide Web, connect to the **Federal Register** at http://www.access.gpo.gov/nara. Those without World Wide Web access can also connect with a local WAIS client, by Telnet to swais.access.gpo.gov, or by dialing (202) 512-1661 with a computer and modem. When using Telnet or modem, type swais, then log in as guest with no password.

For more information about GPO Access, contact the GPO Access User Support Team by E-mail at gpoaccess@gpo.gov; by fax at (202) 512–1262; or call (202) 512–1530 or 1–888–293–6498 (toll free) between 7 a.m. and 5 p.m. Eastern time, Monday–Friday, except Federal holidays.

The annual subscription price for the **Federal Register** paper edition is $555, or $607 for a combined **Federal Register,** Federal Register Index and List of CFR Sections Affected (LSA) subscription; the microfiche edition of the **Federal Register** including the Federal Register Index and LSA is $220. Six month subscriptions are available for one-half the annual rate. The charge for individual copies in paper form is $8.00 for each issue, or $8.00 for each group of pages as actually bound; or $1.50 for each issue in microfiche form. All prices include regular domestic postage and handling. International customers please add 25% for foreign handling. Remit check or money order, made payable to the Superintendent of Documents, or charge to your GPO Deposit Account, VISA, MasterCard or Discover. Mail to: New Orders, Superintendent of Documents, P.O. Box 371954, Pittsburgh, PA 15250–7954.

There are no restrictions on the republication of material appearing in the **Federal Register.**

How To Cite This Publication: Use the volume number and the page number. Example: 64 FR 12345.

SUBSCRIPTIONS AND COPIES

PUBLIC	
Subscriptions:	
Paper or fiche	**202–512–1800**
Assistance with public subscriptions	**512–1806**
General online information	**202–512–1530; 1–888–293–6498**
Single copies/back copies:	
Paper or fiche	**512–1800**
Assistance with public single copies	**512–1803**
FEDERAL AGENCIES	
Subscriptions:	
Paper or fiche	**523–5243**
Assistance with Federal agency subscriptions	**523–5243**

FEDERAL REGISTER WORKSHOP

THE FEDERAL REGISTER: WHAT IT IS AND HOW TO USE IT

FOR: Any person who uses the Federal Register and Code of Federal Regulations.

WHO: Sponsored by the Office of the Federal Register.

WHAT: Free public briefings (approximately 3 hours) to present:

1. The regulatory process, with a focus on the Federal Register system and the public's role in the development regulations.
2. The relationship between the Federal Register and Code of Federal Regulations.
3. The important elements of typical Federal Register documents.
4. An introduction to the finding aids of the FR/CFR system.

WHY: To provide the public with access to information necessary to research Federal agency regulations which directly affect them. There will be no discussion of specific agency regulations.

WASHINGTON, DC

WHEN: March 23, 1999 at 9:00 am.

WHERE: Office of the Federal Register
Conference Room
800 North Capitol Street, NW.
Washington, DC
(3 blocks north of Union Station Metro)

RESERVATIONS: 202–523–4538

Printed on recycled paper.

Contents

Federal Register

Vol. 64, No. 44

Monday, March 8, 1999

Agency for Health Care Policy and Research
NOTICES
Organization, functions, and authority delegations:
Policy Analysis Office abolished, etc., 11012–11015

Agricultural Marketing Service
RULES
Raisins produced from grapes grown in—
California, 10919–10922
PROPOSED RULES
Nectarines and peaches grown in—
California, 11345–11357

Agriculture Department
See Agricultural Marketing Service
See Commodity Credit Corporation
NOTICES
Agency information collection activities:
Proposed collection; comment request, 10978

Alcohol, Tobacco and Firearms Bureau
RULES
Alcoholic beverages:
Labeling proceedings—
Certificates of label approval, exemption from label approval, and distinctive liquor bottle approvals; correction, 10949–10950

Arts and Humanities, National Foundation
See National Foundation on the Arts and the Humanities

Centers for Disease Control and Prevention
NOTICES
Grants and cooperative agreements; availability, etc.:
Water intervention studies to determine fraction of gastrointestinal illness attributable to drinking water, 11025–11027

Children and Families Administration
NOTICES
Privacy Act:
Systems of records, 11015–11018

Civil Rights Commission
NOTICES
Meetings; State advisory committees:
Colorado, 10978
South Carolina, 10978–10979

Commerce Department
See Foreign-Trade Zones Board
See International Trade Administration
See National Oceanic and Atmospheric Administration

Commodity Credit Corporation
RULES
Loan and purchase programs:
Honey; recourse loan program, 10923–10929
Mohair; recourse loan program, 10929–10935

Consumer Product Safety Commission
PROPOSED RULES
Flammable Fabrics Act:
Children's sleepwear (0-6X and 7-14); flammability standards—
Amendments; possible revocation; hearing, 10963–10964

Defense Department
See Navy Department
NOTICES
Meetings:
Defense Intelligence Agency Science and Technology Advisory Board, 10996
Women in Services Advisory Committee, 10996–10997

Education Department
NOTICES
Agency information collection activities:
Submission for OMB review; comment request, 10997–10998
Grants and cooperative agreements; availability, etc.:
Postsecondary education—
Quality higher education for students with disabilities; demonstration projects, 10998
Special education and rehabilitative services—
Individuals with mental or physical disabilities receiving public support; employment opportunities, 10998–10999

Energy Department
See Energy Efficiency and Renewable Energy Office
See Federal Energy Regulatory Commission
NOTICES
Meetings:
Environmental Management Site-Specific Advisory Board—
Fernald Site, OH, 11000
Kirtland Area Office (Sandia), NM, 10999–11000
Nevada Test Site, NV, 11000–11001
Pantex Plant, TX, 10999

Energy Efficiency and Renewable Energy Office
NOTICES
Grants and cooperative agreements; availability, etc.:
National Industrial Competitiveness through Energy, Environment, and Economics (NICE 3) Program, 11001

Environmental Protection Agency
NOTICES
Air pollution control:
Clean Air Act grants—
California, 11004–11005
Superfund; response and remedial actions, proposed settlements, etc.:
David Chemical Site, IL, 11005
Toxic and hazardous substances control:
Premanufacture notices receipts, 11006–11010

Executive Office of the President
See Presidential Documents

Export-Import Bank
NOTICES
Meetings:
Advisory Committee, 11010

Farm Credit Administration
PROPOSED RULES
Freedom of Information Act; implementation, 10954–10959

Federal Aviation Administration
RULES
Airworthiness directives:
Boeing, 10935–10937
Class E airspace, 10938–10940
PROPOSED RULES
Airworthiness directives:
McDonnell Douglas, 10959–10962
VOR Federal airways, 10962–10963
NOTICES
Airport noise compatibility program:
Noise exposure map—
Oakland County International Airport, MI, 11080–11081
Environmental statements; notice of intent:
Hartsfield Atlanta International Airport, GA, 11081

Federal Energy Regulatory Commission
NOTICES
Environmental statements; availability, etc.:
S.R. Hydropower of Brockway Mills, 11003–11004
Hydroelectric applications, 11004
Applications, hearings, determinations, etc.:
Florida Gas Transmission Co., 11001–11002
Koch Gateway Pipeline Co., 11002
National Fuel Gas Supply Corp., 11003
Williston Basin Interstate Pipeline Co., 11003

Federal Maritime Commission
RULES
Ocean transportation intermediaries; licensing, financial responsibility requirements, and general duties, 11155–11183
Tariffs and service contracts:
Carrier automated tariff systems, 11217–11234
Shipping Act of 1984—
Agreements by ocean carriers and marine terminal operators, 11235–11244
Service contracts between shippers and ocean common carriers, 11185–11215
NOTICES
Agreements filed, etc., 11010
Freight forwarder licenses:
Cornerstone Logistics Inc., 11010–11011

Federal Reserve System
NOTICES
Banks and bank holding companies:
Change in bank control, 11011
Formations, acquisitions, and mergers, 11011

Fish and Wildlife Service
NOTICES
Endangered and threatened species:
Recovery plans—
Stebbin's morning-glory, etc. (Gabbro soil plants of Central Sierra Nevada Foothills), 11035–11036

Food and Drug Administration
RULES
Food additives:
Polymers—
Ethylene/propylene copolymers, 10943–10944
Human drugs:
Drug products discontinued from sale for reasons of safety or effectiveness; list, 10944–10947
Medical devices:
Ear, nose, and throat devices—
Nasal dilator, intranasal splint, and bone particle collector, 10947–10949
Protection of human subjects:
Emergency research activities in cases of life-threatening medical conditions; informed consent requirements, exceptions; technical amendment, 10942–10943
NOTICES
Agency information collection activities:
Reporting and recordkeeping requirements, 11018
Medical devices:
Warning letter pilot program, 11018–11023
Reports and guidance documents; availability, etc.:
Biological in vitro diagnostic product; chemistry, manufacturing and controls information, and establishment description information; content and format, 11023–11024

Foreign-Trade Zones Board
NOTICES
Applications, hearings, determinations, etc.:
Ohio; correction, 10979

Health and Human Services Department
See Agency for Health Care Policy and Research
See Centers for Disease Control and Prevention
See Children and Families Administration
See Food and Drug Administration
See National Institutes of Health
See Substance Abuse and Mental Health Services Administration
NOTICES
Meetings:
Health Promotion and Disease Prevention Objectives for 2010, Secretary's Council, 11011–11012

Housing and Urban Development Department
NOTICES
Grants and cooperative agreements; availability, etc.:
Housing assistance payments (Section 8)—
Family self-sufficiency program coordinators for rental certificate and rental voucher programs, 11277–11283
Mainstream housing opportunities for persons with disabilities, 11301–11308
Non-elderly persons with disabilities, 11293–11299
Non-elderly persons with disabilities not currently receiving housing assistance, 11309–11315
Welfare-to-work tenant-based assistance program, 11285–11292
Rural Housing and Economic Development Program, 11245–11275

Interior Department
See Fish and Wildlife Service
See Land Management Bureau
See National Park Service
See Reclamation Bureau

NOTICES
Grants and cooperative agreements; availability, etc.:
Tribal self-governance program—
Programs eligible for inclusion in 2000 FY annual funding agreements; non-BIA bureaus, 11032–11035

Internal Revenue Service
PROPOSED RULES
Estate and gift taxes:
Prior gifts valuation; adequate disclosure; correction, 10964
NOTICES
Agency information collection activities:
Proposed collection; comment request, 11086
Meetings:
Art Advisory Panel, 11086
Reports and guidance documents; availability, etc.:
Art Advisory Panel; closed meetings, 11087

International Trade Administration
NOTICES
Antidumping:
Carbon steel wire rope from—
Mexico, 10979–10982
Chloropicrin from—
China, 10982
Cold-rolled and corrosion-resistant carbon steel flat products from—
Korea, 10982–10983
Elemental sulphur from—
Canada, 10983
Furfuryl alcohol from—
South Africa, 10983–10985
Greige polyester cotton printcloth from—
China, 10985
Iron construction castings from—
Canada et al., 10985–10986
Manganese metal from—
China, 10986–10990
Potassium permanganate from—
Spain and China, 10991
Committees; establishment, renewal, termination, etc.:
U.S.-Turkey Business Development Council, 10991–10992
Countervailing duties:
Heavy iron construction castings from—
Brazil, 10992
Iron-metal castings from—
India, 10992–10993
Tillage tools from—
Argentina, 10993
Export trade certificates of review, 10993–10995
Overseas trade missions:
Oil, gas, and petrochemicals trade mission to Saudi Arabia, United Arab Emirates, and Kuwait, 10995
Applications, hearings, determinations, etc.:
North Carolina State University, 10991

International Trade Commission
NOTICES
Agency information collection activities:
Submission for OMB review; comment request, 11039
Import investigations:
Iron metal castings, etc., from—
India et al., 11039–11041
Potassium permanganate from—
China and Spain, 11041–11042

Justice Department
See Justice Programs Office
See Juvenile Justice and Delinquency Prevention Office

Justice Programs Office
NOTICES
Agency information collection activities:
Submission for OMB review; comment request, 11042

Juvenile Justice and Delinquency Prevention Office
NOTICES
Grants and cooperative agreements; availability, etc.:
Missing and Exploited Children's Program, 11365–11372
Parents Anonymous program, 11359–11363

Labor Department
See Pension and Welfare Benefits Administration

Land Management Bureau
NOTICES
Closure of public lands:
Oregon, 11036–11037
Coal leases, exploration licenses, etc.:
Montana, 11037
Meetings:
Resource Advisory Councils—
Arizona, 11037
Eastern Washington, 11037–11038

National Aeronautics and Space Administration
NOTICES
Meetings:
Advisory Council task forces, 11065

National Foundation on the Arts and the Humanities
NOTICES
Meetings:
Humanities National Council, 11065–11066

National Highway Traffic Safety Administration
PROPOSED RULES
Anthropomorphic test devices:
Occupant crash protection—
12-month-old infant crash test dummy, 10965–10977

National Institutes of Health
NOTICES
Meetings:
National Center for Research Resources, 11024
National Heart, Lung, and Blood Institute, 11024
National Institute of Diabetes and Digestive and Kidney Diseases, 11024–11025 , 11015

National Oceanic and Atmospheric Administration
RULES
Fishery conservation and management:
Alaska; fisheries of Exclusive Economic Zone—
Gulf of Alaska and Bering Sea and Aleutian Islands groundfish, 10952–10953
NOTICES
Agency information collection activities:
Proposed collection; comment request, 10995–10996

National Park Service
NOTICES
Environmental statements; availability, etc.:
Rock Creek Park, Washington, DC; wireless telecommunications facilities, 11038

Navy Department
NOTICES
Environmental statements; notice of intent:
Base realignment and closure—
Naval Weapons Industrial Reserve Plant Bethpage, NY, 10997

Nuclear Regulatory Commission
NOTICES
Agency information collection activities:
Submission for OMB review; comment request, 11066–11067
Environmental statements; availability, etc.:
Baltimore Gas & Electric Co., 11071
Meetings:
Nuclear Waste Advisory Committee, 11071–11072
Reactor Safeguards Advisory Committee, 11072–11073
Reports and guidance documents; availability, etc.:
Materials licenses, consolidated guidance—
Self-shielded irradiator licenses; program-specific guidance, 11073–11074
Applications, hearings, determinations, etc.:
Entergy Operations, Inc., 11067–11069
Kansas Gas & Electric Co. et al., 11069–11070
Texas Utilities Electric Co., 11070

Pension and Welfare Benefits Administration
NOTICES
Employee benefit plans; class exemptions:
Individual retirement accounts and Keogh plans, 11042–11045
Employee benefit plans; prohibited transaction exemptions:
Genito-Urinary Surgeons, Inc., et al., 11045–11051
VECO Corp. et al., 11052–11065

Personnel Management Office
NOTICES
Personnel management demonstration projects:
Army Department—
Aviation Research, Development, and Engineering Center, Federal Center, St. Louis, MO; correction, 11074

Postal Service
RULES
Domestic Mail Manual:
Breast cancer research semi-postal stamp; terms and conditions for use and determination of value, 10950–10952

Presidential Documents
ADMINISTRATIVE ORDERS
Narcotics; certification of major illicit drug producing and transit countries (Presidential Determination No. 99-15 of February 26, 1999), 11317–11343

Public Health Service
See Agency for Health Care Policy and Research
See Centers for Disease Control and Prevention
See Food and Drug Administration
See National Institutes of Health
See Substance Abuse and Mental Health Services Administration

Reclamation Bureau
NOTICES
Meetings:
Bay-Delta Advisory Council, 11038–11039

Research and Special Programs Administration
NOTICES
Hazardous materials:
Applications; exemptions, renewals, etc., 11081–11083

Securities and Exchange Commission
RULES
Securities:
Compensatory benefit arrangements; offers and sales exemption, 11095–11103
Form S-8; securities offer and sale to consultants and advisors, and exercise of stock options by family members of employee optionees, 11103–11117
Seed capital exemption, 11090–11094
PROPOSED RULES
Securities:
Form S-8; securities offer to consultants and advisors, etc.; abuse prevention, 11118–11124
Publication or submission of quotations without specified information, 11124–11153
NOTICES
Meetings; Sunshine Act, 11074–11075

Small Business Administration
NOTICES
Agency information collection activities:
Proposed collection; comment request, 11075
Meetings:
New Markets Lending Company pilot loan program, 11075–11076

Social Security Administration
NOTICES
Privacy Act:
Systems of records, 11076–11079

State Department
RULES
Privacy Act; implementation, 10949
NOTICES
Meetings:
Shipping Coordinating Committee, 11079–11080

Substance Abuse and Mental Health Services Administration
NOTICES
Grants and cooperative agreements; availability, etc.:
Center for Mental Health Services and Center for Substance Abuse Treatment activities, 11027–11031

Surface Transportation Board
NOTICES
Environmental statements; availability, etc.:
Illinois Central Corp. et al., 11083
Railroad operation, acquisition, construction, etc.:
Union Pacific Railroad Co., 11083–11084
Railroad services abandonment:
CSX Transportation, Inc., 11084
Rochelle Railroad Co., 11084–11085

Transportation Department
See Federal Aviation Administration
See National Highway Traffic Safety Administration
See Research and Special Programs Administration
See Surface Transportation Board

Treasury Department
See Alcohol, Tobacco and Firearms Bureau
See Internal Revenue Service

NOTICES
Boycotts, international:
Countries requiring cooperation; list, 11085–11086

United States Information Agency
NOTICES
Art objects; importation for exhibition:
Topkapi Palace: Jewels and Treasures of the Sultans, 11087

Separate Parts In This Issue

Part II
Securities and Exchange Commission, 11089–11153

Part III
Federal Maritime Commission, 11155–11183

Part IV
Federal Maritime Commission, 11185–11215

Part V
Federal Maritime Commission, 11217–11234

Part VI
Federal Maritime Commission, 11235–11244

Part VII
Department of Housing and Urban Development, 11245–11275

Part VIII
Department of Housing and Urban Development, 11277–11283

Part IX
Department of Housing and Urban Development, 11285–11292

Part X
Department of Housing and Urban Development, 11293–11299

Part XI
Department of Housing and Urban Development, 11301–11308

Part XII
Department of Housing and Urban Development, 11309–11315

Part XIII
The President, 11317–11343

Part XIV
Department of Agriculture, Agricultural Marketing Service, 11345–11357

Part XV
Department of Justice, Office of Juvenile Justice and Delinquency Prevention, 11359–11363

Part XVI
Department of Justice, Office of Juvenile Justice and Delinquency Prevention, 11365–11372

Reader Aids
Consult the Reader Aids section at the end of this issue for phone numbers, online resources, finding aids, reminders, and notice of recently enacted public laws.

CFR PARTS AFFECTED IN THIS ISSUE

A cumulative list of the parts affected this month can be found in the Reader Aids section at the end of this issue.

3 CFR

Administrative Orders:

Presidential Determinations:

No. 99-15 of February 26, 1999 11319

7 CFR

989 10919
1434 10923
1469 10929

Proposed Rules:

916 11346
917 11346

12 CFR

Proposed Rules:

602 10954

14 CFR

39 10935
71 (5 documents) 10937, 10938, 10939, 10940

Proposed Rules:

39 10959
71 10962

16 CFR

Proposed Rules:

1615 10963
1616 10963

17 CFR

228 11103
229 11103
230 (3 documents) 11090, 11095, 11103
239 (2 documents) 11103, 11118

Proposed Rules:

239 11118
240 11124

21 CFR

50 10942
177 10943
216 10944
812 10942
874 10947

22 CFR

171 10949

26 CFR

Proposed Rules:

20 10964

27 CFR

13 10949

39 CFR

111 10950

46 CFR

510 11156
514 11186
515 11156
520 11218
530 11186
535 11236
572 11236
583 11156

49 CFR

Proposed Rules:

572 10965

50 CFR

679 10952

Rules and Regulations

Federal Register
Vol. 64, No. 44
Monday, March 8, 1999

This section of the FEDERAL REGISTER contains regulatory documents having general applicability and legal effect, most of which are keyed to and codified in the Code of Federal Regulations, which is published under 50 titles pursuant to 44 U.S.C. 1510.

The Code of Federal Regulations is sold by the Superintendent of Documents. Prices of new books are listed in the first FEDERAL REGISTER issue of each week.

DEPARTMENT OF AGRICULTURE

Agricultural Marketing Service

7 CFR Part 989

[Docket No. FV99–989–3 IFR]

Raisins Produced From Grapes Grown in California; Final Free and Reserve Percentages for 1998–99 Zante Currant Raisins

AGENCY: Agricultural Marketing Service, USDA.

ACTION: Interim final rule with request for comments.

SUMMARY: This rule establishes final volume regulation percentages for 1998–99 Zante Currant raisins covered under the Federal marketing order for California raisins (order). The order regulates the handling of raisins produced from grapes grown in California and is administered locally by the Raisin Administrative Committee (Committee). The volume regulation percentages are 85 percent free and 15 percent reserve. Free tonnage raisins may be sold by handlers to any market. Reserve raisins must be held in a pool for the account of the Committee and are disposed of through various programs authorized under the order. The volume regulation percentages are intended to help the industry manage its supply of Zante Currant raisins and strengthen market conditions.

DATES: *Effective:* March 9, 1999. Comments received by May 7, 1999 will be considered prior to issuance of a final rule.

ADDRESSES: Interested persons are invited to submit written comments concerning this rule. Comments must be sent to the Docket Clerk, Fruit and Vegetable Programs, AMS, USDA, room 2525–S, P.O. Box 96456, Washington, DC 20090–6456; Fax: (202) 720–5698. All comments should reference the docket number and the date and page number of this issue of the **Federal Register** and will be made available for public inspection in the Office of the Docket Clerk during regular business hours.

FOR FURTHER INFORMATION CONTACT: Maureen T. Pello, Marketing Specialist, California Marketing Field Office, Fruit and Vegetable Programs, AMS, USDA, 2202 Monterey Street, suite 102B, Fresno, California 93721; telephone: (559) 487–5901, Fax: (559) 487–5906; or George Kelhart, Technical Advisor, Marketing Order Administration Branch, Fruit and Vegetable Programs, AMS, USDA, room 2525–S, P.O. Box 96456, Washington, DC 20090–6456; telephone: (202) 720–2491, or Fax: (202) 720–5698. Small businesses may request information on complying with this regulation, or obtain a guide on complying with fruit, vegetable, and specialty crop marketing agreements and orders by contacting Jay Guerber, Marketing Order Administration Branch, Fruit and Vegetable Programs, AMS, USDA, P.O. Box 96456, room 2525–S, Washington, DC 20090–6456; telephone (202) 720–2491, Fax: (202) 720–5698, or E-mail: Jay__N__Guerber@usda.gov. You may view the marketing agreement and order small business compliance guide at the following web site: http://www.ams.usda.gov/fv/moab.html.

SUPPLEMENTARY INFORMATION: This rule is issued under Marketing Agreement and Order No. 989 (7 CFR part 989), both as amended, regulating the handling of raisins produced from grapes grown in California, hereinafter referred to as the ''order.'' The order is effective under the Agricultural Marketing Agreement Act of 1937, as amended (7 U.S.C. 601–674), hereinafter referred to as the ''Act.''

The Department of Agriculture (Department) is issuing this rule in conformance with Executive Order 12866.

This rule has been reviewed under Executive Order 12988, Civil Justice Reform. Under the order provisions now in effect, final free and reserve percentages may be established for raisins acquired by handlers during the crop year. This rule establishes final free and reserve percentages for Zante Currant raisins for the 1998–99 crop year, which began August 1, 1998, and ends July 31, 1999. This rule will not preempt any State or local laws, regulations, or policies, unless they present an irreconcilable conflict with this rule.

The Act provides that administrative proceedings must be exhausted before parties may file suit in court. Under section 608c(15)(A) of the Act, any handler subject to an order may file with the Secretary a petition stating that the order, any provision of the order, or any obligation imposed in connection with the order is not in accordance with law and request a modification of the order or to be exempted therefrom. A handler is afforded the opportunity for a hearing on the petition. After the hearing, the Secretary would rule on the petition. The Act provides that the district court of the United States in any district in which the handler is an inhabitant, or has his or her principal place of business, has jurisdiction in equity to review the Secretary's ruling on the petition, provided an action is filed not later than 20 days after the date of the entry of the ruling.

This rule establishes final volume regulation percentages for 1998–99 crop Zante Currant raisins covered under the order. The volume regulation percentages are 85 percent free and 15 percent reserve. Free tonnage raisins may be sold by handlers to any market. Reserve raisins must be held in a pool for the account of the Committee and are disposed of through various programs authorized under the order. For example, reserve raisins may be sold by the Committee to handlers for free use or to replace part of the free tonnage raisins they exported; used in diversion programs; carried over as a hedge against a short crop the following year; or disposed of in other outlets not competitive with those for free tonnage raisins, such as government purchase, distilleries, or animal feed. The volume regulation percentages are intended to help the industry manage its supply of Zante Currant raisins and strengthen market conditions. Final percentages were recommended by the Committee at a meeting on February 11, 1999.

Section 989.54 of the order prescribes the procedures and time frames to be followed in establishing volume regulation. This includes methodology used to calculate percentages. Pursuant to § 989.54(a) of the order, the Committee met on August 13, 1998, to review shipment and inventory data, and other matters relating to the

supplies of raisins of all varietal types. The Committee computed a trade demand for each varietal type for which a free tonnage percentage might be recommended. Trade demand is computed using a formula specified in the order and, for each varietal type, is equal to 90 percent of the prior year's shipments of free tonnage and reserve tonnage raisins sold for free use into all market outlets, adjusted by subtracting the carryin on August 1 of the current crop year and by adding the desirable carryout at the end of that crop year. As specified in § 989.154, the desirable carryout for each varietal type is equal to the shipments of free tonnage raisins of the prior crop year during the months of August, September, and one-half of October. In accordance with these provisions, the Committee computed and announced a 1998–99 trade demand for Zante Currant raisins at 3,215 tons as shown below.

COMPUTED TRADE DEMAND

[Natural condition tons]

	Zante Currant raisins
Prior year's shipments	4,121
Multiplied by 90 percent	0.90
Equals adjusted base	3,709
Minus carryin inventory	1,188
Plus desirable carryout	694
Equals computed trade demand	3,215

Section 989.54(b) of the order requires that the Committee announce, on or before October 5, preliminary crop estimates and determine whether volume regulation is warranted for the varietal types for which it computed a trade demand. That section allows the Committee to extend the October 5 date up to 5 business days if warranted by a late crop.

The 1998–99 crop was unusually late because of the combined effect of adverse crop conditions during the spring of 1998 created by the weather phenomenon known as El Nino, scattered rain during the fall harvest, and a shortage of labor once the grapes were ready for harvest. The crop is normally harvested during late August and early September; this season's crop was harvested about 3–4 weeks later.

Because of the late crop, the Committee met on October 8, 1998, and announced preliminary crop estimates for all nine varietal types of raisins covered under the order. To guard against an underestimation of the crop, the Committee computed preliminary volume regulation percentages for five of the nine varietal types of raisins covered under the order—Dipped Seedless, Natural (sun-dried) Seedless (Naturals), Oleate and Related Seedless, Other Seedless, and Zante Currant raisins. The total crop was initially estimated at 321,486 tons.

As more information became available during the following months, the Committee determined that volume regulation was only warranted for Zante Currant raisins. The other varietal types of raisins for which preliminary percentages were computed are produced from grapes that mature later than Zante Currants, and thus the crop sizes for these varietal types were more adversely affected by the poor weather conditions and labor problems. The Committee ultimately determined that the supplies of these other varietal types would be less than or close to their computed trade demands, and that volume regulation percentages were not needed. Based on the most recent information available, the total crop estimate was reduced from 321,486 to 276,510 tons. This is the first time in 16 years that volume regulation was not implemented for Naturals, the major varietal type of California raisin (crop estimate reduced from 280,092 to 235,000 tons, about 35 percent lower than the 10-year average of 360,183 tons). As in past seasons, the Committee submitted its marketing policy to the Department for review.

Regarding Zante Currant raisins, the Committee announced its preliminary crop estimate at its October 1998 meeting at 3,684 tons. As indicated in the preceding paragraph, Zante Currants mature earlier than the other varietal types of raisins covered under the order. Thus, producers were able to harvest their Zante Currants before it rained in the production area and before labor was in short supply. With the preliminary crop estimate (3,684 tons), 1997–98 carryin inventory (1,188 tons), and reserve raisins released for free use through an export program (483 tons) totaling to a supply of 5,355 tons, about 66 percent higher than trade demand (3,215 tons), and the 1997–98 carryin inventory (1,188 tons) about 71 percent higher than the desirable inventory (694 tons), the Committee determined that volume regulation for Zante Currant raisins was warranted.

At the October meeting, the Committee also computed preliminary free and reserve percentages for Zante Currants which released 65 percent of the computed trade demand since the field price had not been established. The preliminary percentages were 57 percent free and 43 percent reserve. These percentages were modified to release 85 percent of the trade demand on October 16, 1998 when the Zante Currant field price was established. The Zante Currant preliminary percentages were thus modified to 74 percent free and 26 percent reserve. The Committee met on November 13, 1998, and announced interim percentages for Zante Currant raisins at 85 percent free and 15 percent reserve which, based on the 3,684 ton crop estimate, released less than the computed trade demand. On January 15, 1999, the Committee revised its crop estimate for Zante Currants from 3,684 to 3,801 tons.

Various programs to utilize reserve Zante Currant raisins were implemented when volume regulation was in effect during the 1994–95, 1995–96, and 1997–98 seasons to help reduce inventories, and help strengthen total producer prices (which includes proceeds from both free tonnage plus reserve pool Zante Currants) from $412.56 per ton in 1994–95 to an estimated high of $730 per ton in 1997–98. The Committee is implementing a reserve program this year which is expected to help the industry export more Zante Currants, thereby reducing the industry's oversupply, helping to build export markets, and ultimately improving producer returns.

Without such programs, the Committee estimates that its export shipments would be reduced, thereby reducing overall Zante Currant shipments for the crop year. Reduced shipments for the current year would create a high carryin inventory which would result in a lower computed trade demand for next year, a lower free tonnage percentage, should volume regulation be implemented, and likely reduced returns to 1999–2000 crop raisin producers. The implementation of volume regulation for 1998–99 Zante Currant raisins is expected to help manage supply and strengthen market conditions.

As required under § 989.54(d) of the order, the Committee recommended to the Secretary at its meeting on February 11, 1999, final free and reserve percentages for Zante Currant raisins which, when applied to the final production estimate, will tend to release the full trade demand for Zante Currants. With the increased crop estimate of 3,801 tons, final percentages computed to the same figures as the interim percentages—85 percent free and 15 percent reserve. The Committee's calculations to arrive at final percentages are shown in the table below.

FINAL VOLUME REGULATION PERCENTAGES

[Tonnage as natural condition weight]

	Zante Currant raisins
Trade demand	3,215
Divided by crop estimate	3,801
Equals free percentage	85
100 minus free percentage equals reserve percentage	15

In addition, the Department's ''Guidelines for Fruit, Vegetable, and Speciality Crop Marketing Orders'' (Guidelines) specify that 110 percent of recent years' sales should be made available to primary markets each season for marketing orders utilizing reserve pool authority. This goal will be met for Zante Currants by the establishment of final percentages which release 100 percent of the trade demand and the offer of additional reserve raisins for sale to handlers under the ''10 plus 10 offers.'' As specified in § 989.54(g), the 10 plus 10 offers are two offers of reserve pool raisins which are made available to handlers during each season. Handlers may sell their 10 plus 10 raisins to any market. For each such offer, a quantity of reserve raisins equal to 10 percent of the prior year's shipments is made available for free use.

About 824 tons of raisins will be made available in the 10 plus 10 offers (which includes 423 tons of remaining 1997 reserve Zante Currants), or 412 tons per offer. Both offers will be held simultaneously in March 1999. Adding the 824 tons of 10 plus 10 raisins to the 3,215 ton trade demand figure, plus 1,188 tons of 1997–98 carryin inventory equates to about 5,227 tons natural condition raisins or 4,645 tons packed raisins that will be made available for free use, or to the primary market. This is 127 percent of the quantity of Zante Currants shipped in 1997 (4,121 tons natural condition tons or 3,662 packed tons).

In addition to the 10 plus 10 offers, § 989.67(j) of the order provides authority for sales of reserve raisins to handlers under certain conditions such as a national emergency, crop failure, change in economic or marketing conditions, or if free tonnage shipments in the current crop year exceed shipments of a comparable period of the prior crop year. Such reserve raisins may be sold by handlers to any market. These additional offers of reserve raisins would thus make even more raisins available to primary markets which is consistent with the Department's Guidelines.

Pursuant to requirements set forth in the Regulatory Flexibility Act (RFA), the Agricultural Marketing Service (AMS) has considered the economic impact of this action on small entities. Accordingly, AMS has prepared this initial regulatory flexibility analysis.

The purpose of the RFA is to fit regulatory actions to the scale of business subject to such actions in order that small businesses will not be unduly or disproportionately burdened. Marketing orders issued pursuant to the Act, and rules issued thereunder, are unique in that they are brought about through group action of essentially small entities acting on their own behalf. Thus, both statutes have small entity orientation and compatibility.

There are approximately 20 handlers of California raisins who are subject to regulation under the order and approximately 4,500 raisin producers in the regulated area. Almost all of the 20 handlers handled, and about 130 of the 4,500 raisin producers produced Zante Currants during the 1998–99 crop year. Small agricultural service firms have been defined by the Small Business Administration (13 CFR 121.601) as those having annual receipts of less than $5,000,000, and small agricultural producers are defined as those having annual receipts of less than $500,000. No more than 7 handlers, and a majority of producers, of California raisins may be classified as small entities. Thirteen of the 20 handlers subject to regulation have annual sales estimated to be at least $5,000,000, and the remaining 7 handlers have sales less than $5,000,000, excluding receipts from any other sources.

Pursuant to § 989.54(d) of the order, this rule establishes final volume regulation percentages for 1998–99 crop Zante Currant raisins. The volume regulation percentages are 85 percent free and 15 percent reserve. Free tonnage raisins may be sold by handlers to any market. Reserve raisins must be held in a pool for the account of the Committee and are disposed of through certain programs authorized under the order. Volume regulation is warranted for Zante Currants this season because the crop estimate of 3,801 tons combined with the 1997–98 carryin inventory of 1,188 tons, plus 483 tons of reserve raisins released for free use through an export program, results in a supply of 5,472 tons which exceeds the trade demand of 3,215 tons by about 70 percent. The volume regulation percentages are intended to help the industry manage its supply of Zante Currant raisins and strengthen market conditions.

Many years of marketing experience led to the development of the current volume regulation procedures. These procedures have helped the industry address its marketing problems by keeping supplies in balance with domestic and export market needs, and strengthening market conditions. The current volume regulation procedures fully supply the domestic and export markets, provide for market expansion, and help prevent oversupplies in the domestic market.

The free and reserve percentages established by this rule release the full trade demand and apply uniformly to all handlers in the industry, regardless of size. With the exception of the 1996–97 season, small and large Zante Currant raisin producers and handlers have been operating under volume regulation percentages every year since 1994–95. There are no known additional costs incurred by small handlers that are not incurred by large handlers. All handlers are regulated based on the quantity of raisins which they acquire from producers. While the level of benefits of this rulemaking are difficult to quantify, the stabilizing effects of volume regulation impact both small and large handlers positively by helping them maintain orderly marketing conditions by managing supply.

Various programs to utilize reserve Zante Currant raisins were implemented when volume regulation was in effect during the 1994–95, 1995–96, and 1997–98 seasons. As shown in the table following this paragraph, although production varied during those years, volume regulation helped to reduce inventories, and helped to strengthen total producer prices (which includes proceeds from both free tonnage plus reserve pool Zante Currants) from $412.56 per ton in 1994–95 to an estimated high of $730 per ton in 1997–98. The Committee is implementing a reserve program this year which is expected to help the industry export more Zante Currants, thereby reducing the industry's oversupply, helping to build export markets, and ultimately improving producer returns.

ZANTE CURRANT INVENTORIES AND PRODUCER PRICES DURING YEARS OF VOLUME REGULATION

[*Natural condition tons]

Crop Year	Production*	Inventory*		Total season average producer prices (per ton)
		Desirable	Physical	
1994–95	5,377	837	4,364	$412.56
1995–96	3,294	782	2,890	711.32
1996–97	4,491	987	549	[1] 1,150.00
1997–98	4,826	694	1,188	730.00

[1] No volume regulation.

Free and reserve percentages are established by variety, and only in years when the supply exceeds the trade demand by a large enough margin that the Committee believes volume regulation is necessary to maintain market stability. Accordingly, in assessing whether to apply volume regulation or, as an alternative, not to apply such regulation, the Committee recommended that volume regulation was only warranted for Zante Currant raisins this season. Preliminary volume regulation percentages were computed and announced in October 1998 for four other varietal types of California raisins. As more information became available in the following months, the Committee determined that the supplies of these other varietal types would be less than or close to their computed trade demands; thus, the Committee determined that volume regulation was not warranted.

There are some reporting, recordkeeping and other compliance requirements under the order. The reporting and recordkeeping burdens are necessary for compliance purposes and for developing statistical data for maintenance of the program. The requirements are the same as those applied last season. Thus, this action will not impose any additional reporting or recordkeeping burdens on either small or large handlers. The forms require information which is readily available from handler records and which can be provided without data processing equipment or trained statistical staff. The information and recordkeeping requirements have been previously approved by the Office of Management and Budget (OMB) under OMB Control No. 0581–0178. As with other, similar marketing order programs, reports and forms are periodically studied to reduce or eliminate duplicate information collection burdens by industry and public sector agencies.

In addition, the Department has not identified any relevant Federal rules that duplicate, overlap, or conflict with this rule. Finally, interested persons are invited to submit information on the regulatory and informational impacts of this action on small businesses.

Further, Committee and subcommittee meetings are widely publicized in advance and are held in a location central to the production area. The meetings are open to all industry members, including small business entities, and other interested persons who are encouraged to participate in the deliberations and voice their opinions on topics under discussion. Thus, Committee recommendations can be considered to represent the interests of small business entities in the industry.

After consideration of all relevant material presented, including the Committee's recommendation, and other information, it is found that this interim final rule, as hereinafter set forth, will tend to effectuate the declared policy of the Act.

This rule invites comments for a 60-day period on the establishment of final volume regulation percentages for 1998–99 crop Zante Currant raisins covered under the order. All comments received within the comment period will be considered prior to finalization of this rule.

Pursuant to 5 U.S.C. 553, it is also found and determined upon good cause that it is impracticable, unnecessary, and contrary to the public interest to give preliminary notice prior to putting this rule into effect, and that good cause exists for not postponing the effective date of this rule until 30 days after publication in the **Federal Register** because: (1) The relevant provisions of this part require that the percentages designated herein for the 1998–99 crop year apply to all Zante Currant raisins acquired from the beginning of that crop year; (2) handlers are currently marketing 1998–99 crop Zante Currant raisins and this action should be taken promptly to achieve the intended purpose of making the full trade demand available to handlers; (3) handlers are aware of this action, which the Committee unanimously recommended at an open meeting, and need no additional time to comply with these percentages; and (4) this interim final rule provides a 60-day comment period and any comments received will be considered prior to finalization of this rule.

List of Subjects in 7 CFR Part 989

Grapes, Marketing agreements, Raisins, Reporting and recordkeeping requirements.

For the reasons set forth in the preamble, 7 CFR part 989 is amended to read as follows:

PART 989—RAISINS PRODUCED FROM GRAPES GROWN IN CALIFORNIA

1. The authority citation for 7 CFR part 989 continues to read as follows:

Authority: 7 U.S.C. 601–674.

2. Section 989.252 is added to Subpart—Supplementary Regulations to read as follows:

Note: This section will not appear in the annual Code of Federal Regulations.

§ 989.252 Final free and reserve percentages for the 1998–99 crop year.

The final percentages for standard Zante Currant raisins acquired by handlers during the crop year beginning on August 1, 1998, which shall be free tonnage and reserve tonnage, respectively, are designated as follows:

Varietal type	Free percentage	Reserve percentage
Zante Currant	85	15

Dated: March 2, 1999.

Robert C. Keeney,

Deputy Administrator, Fruit and Vegetable Programs.

[FR Doc. 99–5551 Filed 3–5–99; 8:45 am]

BILLING CODE 3410–02–P

DEPARTMENT OF AGRICULTURE

Commodity Credit Corporation

7 CFR Part 1434

RIN 0560–AF62

Recourse Loan Regulations for Honey

AGENCY: Commodity Credit Corporation, USDA.

ACTION: Final rule.

SUMMARY: This final rule is issued pursuant to the provisions of the Omnibus Consolidated and Emergency Supplemental Appropriations Act, 1999 (the 1999 Act), which amended the Agricultural Market Transition Act, and provides for the availability of recourse loans to producers of 1998 crop honey. This rule sets forth the regulations for the administration of the honey recourse loan program.

DATES: Effective March 3, 1999.

FOR FURTHER INFORMATION CONTACT: Margaret Wright, Program Specialist, Farm Service Agency (FSA), USDA, STOP 0512, 1400 Independence Avenue, SW, Washington, D.C. 20250–0512; telephone: (202) 720–8481.

SUPPLEMENTARY INFORMATION:

Executive Order 12866

This rule is in conformance with Executive Order 12866 and has been determined to be significant and therefore has been reviewed by the Office of Management and Budget.

Federal Assistance Program

The title and number of the Federal Assistance Program, as found in the Catalog of Federal Domestic Assistance, to which this rule applies, are Commodity Loans and Purchases—10.051.

Environmental Evaluation

It has been determined by an environmental evaluation that this action will have no significant impact on the quality of the human environment. Therefore, neither an environmental assessment nor an environmental impact statement is needed.

Executive Order 12372

This activity is not subject to the provisions of Executive Order 12372, which requires intergovernmental consultation with State and local officials. See the notice related to 7 CFR part 3014, subpart V, published at 48 FR 29115 (June 24, 1983).

Executive Order 12988

This final rule has been reviewed in accordance with Executive Order 12988. The provisions of this final rule are not retroactive and preempt State laws to the extent that such laws are inconsistent with the provisions of the final rule. Before any legal action is brought regarding determinations made under provisions of 7 CFR part 723, the administrative appeal provisions set forth at 7 CFR part 780 must be exhausted.

Regulatory Flexibility Act

It has been determined that the Regulatory Flexibility Act is not applicable to this final rule since the Commodity Credit Corporation (CCC) is not required by 5 U.S.C. 553 or any other provision of law to publish a notice of proposed rule making with respect to the subject matter of this rule.

Unfunded Federal Mandates

This rule contains no Federal mandates under the regulatory provisions of Title II of the Unfunded Mandate Reform Act of 1995 (UMRA) for State, local, and tribal governments or the private sector. Thus, this rule is not subject to the requirements of sections 202 and 205 of the UMRA.

Paperwork Reduction Act and Notice and Comment

Section 1133 of the Omnibus Consolidated and Emergency Supplemental Appropriations Act, 1999 (the ''1999 Act'') provides that this rule-making shall be issued without regard to the public notice and comment provisions of 5 U.S.C. 553 or the Paperwork Reduction Act, and provides that the provisions of 5 U.S.C. 808 which allows exemption from layovers for Congressional review shall be applied. Accordingly, this rule and its information collection requirements are made effective immediately in accordance with these provisions. Because of the foregoing provisions and because this rule provides needed time-sensitive relief, delay in completing this rule would be contrary to the public interest.

Background

Section 1122 of the 1999 Act provides that in order to assist producers of honey to market their honey in an orderly manner during a period of disastrously low prices, the Secretary of Agriculture ''[S]hall make available recourse loans to producers of the 1998 crop of honey on fair and reasonable terms and conditions, as determined by the Secretary''. This final rule contains the terms and conditions that the Secretary has determined are necessary to implement Sec. 1122 of the 1999 Act. The terms and conditions focus on two critical issues: (1) eligibility and (2) program administration.

Eligibility

The regulation at 7 CFR § 1434.4 lists the eligibility requirements for both the persons applying for a recourse loan (loan) and for the honey being tendered as loan collateral. The essence of the eligibility requirements is that loan applicants must be ''producers'' of honey and not speculators who have purchased the honey. In general, a loan applicant must have a separate and identifiable interest in both the bees and the honey. This means, in part, that the loan applicant must have been responsible for the financial risk of keeping the bees and for producing and extracting the honey.

The loan applicant must also hold a beneficial interest in the honey collateral until the loan is repaid. Under the regulation, such an interest will require that the producer maintains title and control over the disposition of the honey, as well as the risk of loss of the honey.

Persons handling the marketing of the honey through a CCC-approved cooperative marketing association (CMA) are also eligible to participate in the loan program, provided the beneficial interest in the honey remains with the CMA member/loan applicant who shares in the marketing proceeds realized by the CMA. Two or more applicants may be eligible for a joint loan if, as individuals, they would fulfill the eligibility requirements and the commingled honey is not already under CCC loan.

Program Administration

The program will be administered through the Department's Farm Service Agency (FSA). Section 1122 of the 1999 Act provides that recourse loans will be made to producers of 1998 crop honey and will operate on a no-net-cost basis. To operate the program on a no-net-cost basis, a service fee will be assessed at time of loan making to cover administrative costs associated with the honey recourse loan program. These administrative costs include costs associated with the county office loan workload, for publishing and distributing program information and procedures, and salary expenses. The honey recourse loan program will operate similarly to the way the honey program was operated in the 1994 and 1995 crop years. CCC has determined that the final date to request a loan will be 60 calendar days after publication of the regulation in the **Federal Register**. The loans will mature 9 months after loan disbursement. Anyone interested

in applying for a loan or who has questions concerning eligibility or any other matter covered under this regulation will be able to obtain assistance from the local FSA county office.

Any producer seeking to sell the honey pledged as collateral to repay the loan will be required to obtain written authorization from the county office before moving the honey for sale. If the producer fails to obtain such authorization, provides incorrect certifications, or makes fraudulent representations, the producer will be in violation of the terms and conditions of the loan note and security agreement and will be subject to liquidated damages and other actions as provided in § 1434.13 of the regulations. If the loan is not repaid in full by the loan maturity date, CCC may foreclose on the pledged honey and sell the honey. CCC's security interest in the honey loan collateral is first and superior to all other security interests. Also, the Government may pursue other options open to it including remedies against persons handling honey in disregard of the security interest.

List of Subjects in 7 CFR Part 1434

Honey, Loan programs/agriculture, Reporting and record keeping requirements.

Accordingly, 7 CFR part 1434 is added to read as follows:

PART 1434—RECOURSE LOAN REGULATIONS FOR HONEY

Sec.
1434.1 Applicability.
1434.2 Administration.
1434.3 Definitions.
1434.4 Eligibility.
1434.5 Containers and drums.
1434.6 Application, availability, disbursement, and maturity.
1434.7 Eligible storage.
1434.8 Liens.
1434.9 Fees and interest.
1434.10 Determination of quantity.
1434.11 Transfer of producer's interest prohibited.
1434.12 Loss or damage.
1434.13 Personal liability of the producer.
1434.14 Release of the honey pledged as collateral for a loan.
1434.15 Liquidation of loans.
1434.16 Foreclosure.
1434.17 Handling payments and collections not exceeding $9.99.
1434.18 Death, incompetency, or disappearance; appeals; other loan provisions.

Authority: Section 1122, Pub. L. 105–277, 112 Stat. 2681.

§ 1434.1 Applicability.

The regulations of this part provide the terms and conditions under which the Commodity Credit Corporation (CCC) may issue recourse loans for the 1998 crop of honey that has remained continuously within the beneficial interest of the producer. Additional terms and conditions that must be followed to obtain a loan will be set forth in these regulations and the applicable note and security agreements. Forms needed to obtain a loan will be available in State and county Farm Service Agency (State and county) offices.

§ 1434.2 Administration.

(a) The regulations of this part shall be administered under the general supervision of the Executive Vice President, CCC, and shall be carried out in the field by State and county committees.

(b) State and county committees, representatives and employees thereof, do not have the authority to modify or waive any of the provisions of the regulations of this part.

(c) The State committee shall take any action required by these regulations that has not been taken by the county committee. The State committee shall also:

(1) Correct, or require a county committee to correct, any action taken by such county committee that is not in accordance with the regulations of this part; or

(2) Require a county committee to withhold taking any action that is not in accordance with the regulations of this part.

(d) No provision or delegation herein to a State or county committee shall preclude the Executive Vice President, CCC, or a designee, from determining any question arising under the program or from reversing or modifying any determination made by a State or county committee.

(e) The Deputy Administrator for Farm Programs, FSA, may authorize State and county committees to waive or modify deadlines and other program requirements in cases where timeliness or failure to meet such other requirements does not affect adversely the operation of the program.

(f) An approving official of CCC may execute loans and related documents only under the terms and conditions determined and announced by CCC. Any such document that is not executed in accordance with such terms and conditions, including any purported execution before the date authorized by CCC, shall be null and void unless affirmed by the Executive Vice President, CCC.

§ 1434.3 Definitions.

The definitions set forth in this section shall be applicable for all purposes of program administration. The terms defined in part 718 of this title shall also be applicable except where those definitions conflict with the definitions set forth in this section or in program instruments created under this part.

Administrator is the FSA Administrator.

Adulterated honey, is for the purpose of this part only, honey where any foreign substance including water has been substituted in whole or in part for honey whether or not such substance is poisonous or deleterious to render honey injurious to health or otherwise makes the honey unsound, unhealthy, unwholesome, or otherwise unfit for human or animal consumption.

Approving official is a representative of CCC who is authorized by the Executive Vice President, CCC, to approve loan documents prepared under this part.

Charge is a fee, cost, and expense (including foreclosure costs) incident to insuring, carrying, handling, storing, conditioning, and marketing the honey and otherwise protecting the honey.

CMA is a cooperative marketing association engaged in marketing honey.

County office is the local FSA office.

Crop year is the calendar year in which honey is extracted.

Executive Vice President, CCC, is the Administrator, FSA.

FSA is the Farm Service Agency, United States Department of Agriculture.

Ineligible honey is honey not eligible for a loan under this part for which ineligibility shall include, but is not limited to, honey from the following floral sources regardless of whether the honey meets other eligibility requirements: Andromeda, bitterweed, broomweed, cajeput (melaleuca), carrot, chinquapin, dog fennel, desert hollyhock, gumweed, mescal, onion, prickly pear, prune, queen's delight, rabbit brush, snowbrush (ceanothus), snow-on-the-mountain, spurge (leafy spurge), tarweed, and similar objectionably-flavored honey or blends of honey as determined by the Director, Price Support Division, FSA. If any blends of honey contain such ineligible honey, the lot as a whole shall be considered ineligibile for loan.

Loan is a recourse loan on honey.

Loan quantity is the quantity on which the loan was disbursed shown on the note and security agreement.

Nontable honey is honey having a predominant flavor of limited acceptability for table use even though

such honey may be considered suitable for table use in areas in which it is produced and includes honey with a predominant flavor of aster, athel, avocado, Brazilian pepper, buckwheat (except western wild buckwheat), cabbage palmetto, Christmas berry, cranberry, dandelion, eucalyptus, goldenrod, heartsease (smartweed), horsemint, kiawe, loosestrife, macadamia, mangrove, manzanita, mint, partridge pea, rattan vine, safflower, salt cedar (Tamarix Gallica) spanish needle, spikeweed, titi, toyon, tulip popular, wild cherry, yaupon, and similarly-flavored honey or blends of such honeys as determined by the Director, Price Support Division, Farm Service Agency.

Ownership is with respect to honey tendered for a loan, control, title, risk of loss, and the right to make all decisions regarding the tender of honey to CCC for a loan or for marketing.

Person is an individual, partnership, association, corporation, estate or trust, or other business enterprise or other legal entity and, whenever applicable a State, political subdivision of a State, or any agency thereof.

Program is the administration and issuance of a loan in accordance with the terms and conditions of this part and of any note and security agreement which must be executed by a loan recipient under this part.

Table honey is any honey having a good flavor of the predominant floral source which can be readily marketed for table use in all parts of the country including honey having the following sources: alfalfa, apple, basswood, bird's-foot trefoil, blackberry, blueberry, brazil brush, catsclaw, Chinese tallow, clover, cotton, fireweed, gallberry, huajillo, knapweed (American), lima bean, mesquite, orange, raspberry, sage, saw palmetto, snowberry, sourwood, soybean, star thistle (barnaby's thistle), sunflower, sweet clover, tupelo, vetch, western wild buckwheat, wild alfalfa, and similar mild flavors or blends of mild-flavored honeys as determined by the Director, Price Support Division, FSA.

Representative is a receiver, executor, administrator, guardian, or trustee representing the interests of a person or an estate.

State committee is the FSA committee so designated for the applicable State.

§ 1434.4 Eligibility.

(a) To be eligible to receive an individual or joint loan under this part, a person must:

(1) Own, other than through a security interest, mortgage, or lien, honey that:

(i) Is produced in the United States during the calendar year for which a loan is requested and extracted on or before December 31 of such calendar year;

(ii) Does not contain any ineligible honey floral sources;

(iii) Is not adulterated;

(iv) Has not been scorched, burned, or subjected to excessive heat resulting in objectionable flavor, color deterioration or carmelization;

(v) Does not contain excessive bees or bee parts, paint chips, wood chips, or other foreign matter; and

(vi) Is not fermenting.

(2) Share in the risk of producing honey;

(3) Comply with paragraph (h) of this section;

(4) Store the honey pledged as loan collateral in eligible storage and in eligible metal containers that meet the requirements of §§ 1434.7 and 1434.5, respectively;

(5) Adequately protect the interests of CCC by providing security for a loan in accordance with the requirements in § 1434.8 and by maintaining in good condition the honey pledged as security for a loan;

(6) Be accurate and truthful and not make any misrepresentations with respect to any information provided to CCC concerning any activity covered by this part; and

(7) Not have been convicted of a crime as would render the person not eligible for the loan because of the provisions of part 718 of this title.

(b) A person who complies with paragraph (a) of this section, who enters into a contract to sell the honey used as collateral for a loan but retains, at a minimum, a beneficial interest in the honey and who does not receive an advance payment from the purchaser to enter into the contract unless the purchaser is a cooperative marketing association (CMA) that is eligible under paragraph (g) of this section, remains eligible for a loan.

(c) Two or more applicants may be eligible for a joint loan if:

(1) The conditions in paragraphs (a) and (b) of this section are met with respect to the commingled honey collateral stored in the same eligible containers they are tendering for a loan; and

(2) The commingled honey is not used as collateral for an individual loan that has not been repaid.

(d) Heirs who succeed to a beneficial interest in the honey are eligible for a loan if they:

(1) Assume the decedent's obligation under a loan if such loan has already been obtained; and

(2) Assure continued safe storage of the honey if such honey has been pledged as collateral for a loan.

(e) A representative may be eligible to receive a loan on behalf of a person or estate who or which meets the requirements in paragraphs (a), (b), (c), and (d) of this section and that the honey tendered as collateral by the representative, in his capacity as a representative, shall be considered as tendered by the person or estate being represented.

(f) A minor who otherwise meets the requirements of this part for a loan shall be eligible to receive a loan only if the minor meets one of the following requirements:

(1) A court or statute has conferred the right of majority on the minor;

(2) A guardian has been appointed to manage the minor's property and the applicable loan documents are signed by the guardian;

(3) Any note signed by the minor is cosigned by a person determined by the county committee to be financially responsible; or

(4) A surety, by furnishing a bond, guarantees to protect CCC from any loss incurred for which the minor would be liable had the minor been an adult.

(g) A CMA which the Executive Vice President, CCC, determines meets the requirements for CMA's in part 1425 of this title may be eligible to obtain a loan on behalf of those members who themselves are eligible to obtain a loan provided that:

(1) The beneficial interest in the honey must always, until loan repayment or forfeiture, remain in the member who delivered the honey to the eligible CMA or its member CMA's, except as otherwise provided in this part; and

(2) The honey delivered to an eligible CMA shall not be eligible for a loan if the member who delivered the honey does not retain the right to share in the proceeds from the marketing of the honey as provided in part 1425 of this title.

(h)(1) To be eligible to receive loans under this part a producer must have the beneficial interest in the honey that is tendered to CCC for a loan. The producer must always have had the beneficial interest in the honey unless, before the honey was extracted, the producer and a former producer whom the producer tendering the honey to CCC has succeeded had such an interest in the honey. Honey obtained by gift or purchase shall not be eligible to be tendered to CCC for loans. Heirs who succeed to the beneficial interest of a deceased producer or who assume the decedent's obligations under an existing loan shall be eligible to receive loans whether succession to the honey occurs before or after extraction so long as the

heir otherwise complies with the provisions of this part.

(2) A producer shall not be considered to have divested the beneficial interest in the honey if the producer retains control, title, and risk of loss in the honey including the right to make all decisions regarding the tender of such honey to CCC for a loan, and the producer takes one of the following actions:

(i) Executes an option to purchase, whether or not a payment is made by the potential buyer for such option to purchase, with respect to such honey if all other eligibility requirements are met and the option to purchase contains the following provision:

Notwithstanding any other provision of this option to purchase, title, risk of loss, and beneficial interest in the honey, as specified in 7 CFR part 1434, shall remain with the producer until the buyer exercises this option to purchase the honey. This option to purchase shall expire, notwithstanding any action or inaction by either the producer or the buyer, at the earlier of: (1) the maturity of any CCC loan which is secured by such honey; (2) the date the CCC claims title to such honey; or (3) such other date as provided in this option.

(ii) Enters into a contract to sell the honey if the producer retains title, risk of loss, and beneficial interest in the honey and the purchaser does not pay to the producer any advance payment amount or any incentive payment amount to enter into such contract except as provided in part 1425 of this chapter.

(3) If loans are made available to producers through an approved CMA in accordance with part 1425 of this chapter, the beneficial interest in the honey must always have been in the producer-member who delivered the honey to the CMA or its member CMA's, except as otherwise provided in this section. Honey delivered to such a CMA shall not be eligible for loans if the producer-member who delivered the honey does not retain the right to share in the proceeds from the marketing of the honey as provided in part 1425 of this chapter.

(i) A producer may, before the final date for obtaining a loan for honey, re-offer as loan honey any honey that has been previously pledged as loan honey except that the loan on such re-offered honey shall have the same maturity date as the original loan.

§ 1434.5 Containers and drums.

(a)(1) The honey must be packed in metal containers of a capacity of not less than 5 gallons or greater than 70 gallons. The metal containers must meet the requirements of the Federal Food, Drug, and Cosmetic Act, as amended, and regulations issued thereunder and must be generally fit for the purpose for which they are to be used;

(2) The 5-gallon containers must hold approximately 60 pounds of honey, and must be new, clean, sound, uncased, and free from appreciable dents and rust. The handle of each container must be firm and strong enough to permit carrying the filled container. The cover and can opening must not be damaged in any way that will prevent a tight seal. Cans which are punctured or have been punctured and resealed by soldering will not be acceptable, and

(3) The steel drums must be an open-end type and filled no closer than 2 inches from the top of the drums. Such drums must be new or must be used drums which have been reconditioned inside and outside. The steel drums must be clean, treated inside and outside to prevent rusting, fitted with gaskets which provide a tight seal and have an inside coating suitable for honey storage.

(b) Honey shall not be eligible to be pledged as collateral for loans if such honey is stored in:

(1) 55-gallon steel drums having a tare weight less than 38 pounds, 30-gallon steel drums having a tare weight less than 26 pounds, or drums having removable liners of polyethylene or other materials;

(2) Bung-type drums;

(3) Bulk tanks;

(4) Plastic buckets and containers;

(5) Steel drums which are severely enough dented as to cause damage to their lining, improper seal, or stacking capabilities; and

(6) Rusted drums with corroded areas.

§ 1434.6 Application, availability, disbursement, and maturity.

(a) The deadline for requesting a loan offered under this part is May 7, 1999.

(b) Loans mature on demand but not later than the last day of the ninth calendar month following the month in which the note and security agreement was approved. When the final maturity date falls on a non-workday for county offices, CCC shall extend the final date to the next workday. Before the date determined in paragraph (a) of this section, a producer may re-offer as loan collateral any eligible honey that has been offered previously for a CCC loan and the loan has been repaid.

(c) A producer must request loans at the county office of the county where the honey is stored if the honey is stored at the producer's farm. A producer who requests a loan on honey stored in eligible storage other than the producer's farm, may request loans at either the county office of the county where the storage facility is located or at the county office of the county where the producer's main place of business is located. A CMA must request loans at the county office for the county in which the principal office of the CMA is located unless the State committee designates another county office. If the CMA has operations in two or more States, the CMA must file its loan applications at the county office for the county in which its principal office for each State is located.

(d) Subject to paragraph (a) of this section, loans for the 1998 crop of honey are available to producers as soon as announced by CCC.

(e) Loans will be made on the honey as declared and certified by the producer on Form CCC–633 (Honey), (Honey Loan Certification and Worksheet) at the time the honey is pledged as collateral for a loan. The producer is also required to declare and certify on Form CCC–633 (Honey) the class (table or nontable) and floral source of the honey at the time the honey is pledged as collateral for a loan.

(f) The request for a loan shall not be approved until all producers having an interest in the honey sign the note and security agreement and CCC approves such note and security agreement. The disbursement of loans will be made by county offices on behalf of CCC.

(g) The loan documents shall not be presented for disbursement unless the honey subject to the note and security agreement:

(1) Is eligible to be pledged as collateral for a loan;

(2) Is in existence;

(3) Has been extracted;

(4) Is in eligible storage; and

(5) Has not been blended or mixed with ineligible honey.

(h) If, after a loan is made, CCC determines that the producer or the honey collateral is not in compliance with any of the provisions of this part, the producer shall refund the total amount disbursed under loan and charges plus interest, including late payment interest as provided in part 1403 of this title.

§ 1434.7 Eligible storage.

(a) Loans will be made only on honey in eligible storage which shall consist of a storage structure located on or off the farm which is determined by CCC to be under the control of the producer and affords safe storage for honey pledged as collateral for a loan. If the honey located in a farm storage structure is pledged as collateral that secures more than one loan, the honey must be segregated so as to preserve the identity of the honey

securing such loan. Honey securing a loan must also be segregated from any honey not pledged as collateral for a loan which is stored in the same structure.

(b) Producers may also obtain loans on honey packed in eligible containers and stored in facilities owned by third parties in which the honey of more than one person is stored if the honey which is to be pledged as collateral for a loan and which is stored identity preserved or is segregated from all other honey. Each container of the segregated quantity of honey shall be marked with the producer's name, loan number, and lot number so as to identify the honey from other honey stored in the structure.

§ 1434.8 Liens.

(a) CCC's security interest in the honey pledged as collateral is first and superior to all other security interests.

(b) The county office shall file or record, as required by State law, all financing statements needed to perfect a security interest in honey pledged as collateral for a loan. The cost of filing and recording shall be for the account of CCC.

(c) If there are any other security interests, liens, or encumbrances on the honey, CCC shall obtain waivers that fully protect the interest of CCC even though the security interests, liens, or encumbrances are satisfied from the loan proceeds. No additional security interests, liens, or encumbrances shall be placed on the honey after the loan is approved.

§ 1434.9 Fees and interest.

(a) A producer shall pay a nonrefundable loan service fee to CCC at a rate determined by CCC to operate the program on a no-net-cost basis as determined by the Executive Vice President, CCC. The amount of such fees will be available in State and county offices and will be shown on the note and security agreement.

(b) Interest which accrues with respect to a loan shall be determined in accordance with part 1405 of this chapter.

§ 1434.10 Determination of quantity.

The amount of a loan shall be based on 100 per cent of the net weight in pounds of such quantity certified by the producer for honey on Form CCC–633 (Honey) which is pledged as security for the loan and covered by the note and security agreement. Estimates of the quantity of honey shall be made on the basis of 12 pounds for each gallon of rated capacity of the container.

§ 1434.11 Transfer of producer's interest prohibited.

Absent written approval from CCC, the producer shall not transfer either the remaining interest in, or right to redeem, the honey pledged as collateral for a loan on honey nor shall anyone acquire such interest or right. Subject to the provisions of § 1434.14, a producer who wishes to liquidate all or part of a loan by contracting for the sale of the honey must obtain written approval from the county office on a form prescribed by CCC to remove a specified quantity of the honey from storage. Any such approval shall be subject to the terms and conditions set forth in the applicable form, copies of which may be obtained by producers at the county office.

§ 1434.12 Loss or damage.

The producer is responsible for any loss in quantity or quality of the honey pledged as collateral for a loan. CCC shall not assume any loss in quantity or quality of the loan collateral.

§ 1434.13 Personal liability of the producer.

(a) When applying for an individual or joint loan, each producer agrees:

(1) When signing Form CCC–633 (Honey), Honey Loan Certification and Worksheet and Form CCC–677, Farm Storage Note and Security Agreement, that the producer will:

(i) Provide correct, accurate, and truthful certifications and representations of the loan quantity and all other matters of fact and interest; and

(ii) Not remove or dispose of any amount of the loan quantity without prior written approval from CCC in accordance with this section.

(2) That violation of the terms and conditions of this part and Form CCC–677 will cause harm or damage to CCC in that funds may be disbursed to the producer for a loan quantity which is not actually in existence or for a quantity for which the producer is not eligible.

(b) For the purposes of this section, violations include any failure to comply with this part or the loan agreement, including but not limited to any incorrect certification or:

(1) Unauthorized removal of honey which shall include but is not limited to the movement of any loan quantity of honey from the storage structure in which the commodity was stored when the loan was approved to any other storage structure whether or not such structure is located on the producer's farm without prior written authorization from the county committee in accordance with § 1434.14.

(2) Any unauthorized disposition which shall include, but is not limited to the conversion of any loan quantity pledged as collateral for a loan without prior written authorization from the county committee in accordance with § 1434.14.

(c) The producer and CCC agree that it will be difficult, if not impossible, to prove the amount of damages to CCC for conduct which is in violation of this section. Accordingly, if the county committee determines that the producer has engaged in any such violation, liquidated damages shall be assessed in addition to any loan refund and other charges that may be due. The amount of such damages shall be computed using the quantity of honey that is involved in the violation and the formula set out below. If CCC determines the producer:

(1) Acted in good faith when the violation occurred, liquidated damages will be assessed by multiplying the quantity involved in the violation by:

(i) 10 percent of the loan rate applicable to the loan note for the first offense; or

(ii) 25 percent of the loan rate applicable to the loan note for the second offense; or

(2) Did not act in good faith with regard to the violation, or for cases other than the first or second offense, liquidated damages will be assessed by multiplying the quantity involved in the violation by 25 percent of the loan rate applicable to the loan note.

(d) For liquidated damages assessed in accordance with paragraph (c)(1) of this section, the county committee shall:

(1) Require repayment of the loan principal applicable to the loan quantity involved in the violation plus charges and interest; and

(2) If the producer fails to pay such amount within 30 calendar days from the date of notification, call the applicable loan for all of the honey under loan, plus charges and interest.

(e) For liquidated damages assessed in accordance with paragraph (c)(2) of this section, the county committee shall call the loan involved in the violation, and charges plus interest.

(f) The county committee:

(1) May waive the administrative actions taken in accordance with paragraphs (c)(1) and (d) of this section if the county committee determines that:

(i) The violation occurred inadvertently, accidentally, or unintentionally; or

(ii) The producer acted to prevent spoilage of the commodity.

(2) Shall not consider the following acts as inadvertent, accidental, or unintentional:

(i) Movement of loan collateral off the farm;

(ii) Movement of loan collateral from one storage structure to another on the farm; and

(iii) Consumption of loan collateral.

(3) Shall furnish a copy of its determination to the State committee, and the Administrator. If the determination of the county committee is not disapproved by either the State committee or the Administrator or a designee, within 60 calendar days from the date the determination is received, such determination may be considered to have been approved unless the Administrator issues procedures that allow for more time or decides in an individual case that more time is needed.

(g) If there is any violation of the loan agreement or this part, the loan may be terminated in which case there must be a full refund of the loan plus interest and costs.

(h) If the county committee determines that the producer has violated this part or the loan agreement, the county committee shall notify the producer in writing that:

(1) The producer has 30 calendar days to provide evidence and information regarding the circumstances which caused the violation, to the county committee, and

(2) Administrative actions will be taken in accordance with paragraph (d) or (e) of this section.

(i)(1) If a producer:

(i) Makes any fraudulent or misleading representation in obtaining a loan, maintaining, or settling a loan; or

(ii) Disposes or moves the loan collateral without the approval of CCC, such loan shall become payable upon demand by CCC. The producer shall be liable for:

(A) The amount of the loan;

(B) Any additional amounts paid by CCC with respect to the loan;

(C) All other costs which CCC would not have incurred but for the fraudulent representation, the unauthorized disposition or movement of the loan collateral;

(D) Interest on such amounts;

(E) Late payment interest as may be provided for in part 1403 of this title; and

(F) Liquidated damages assessed under paragraph (c) of this section; and

(2) Notwithstanding any provisions of the note and security agreement, if a producer has made any such fraudulent or misleading representation to CCC or if the producer has disposed of, or moved, the loan collateral without prior written approval from CCC in accordance with § 1434.14, the value of the settlement for such collateral removed by CCC shall be determined by CCC according to § 1434.16.

(j) A producer shall be personally liable for any damages resulting from honey removed by CCC, containing mercurial compounds or other substances poisonous to humans, animals, or food commodities which are contaminated.

(k) If the amount disbursed under a loan or in settlement thereof exceeds the amount authorized under this part, the producer shall be personally liable for repayment of such excess and charges, plus interest, and for any other sanction as may be allowed by law.

(l) If the amount collected from the producer in satisfaction of the loan is less than the amount required in accordance with this part, the producer shall be personally liable for repayment of the amount of such deficiency and charges, plus interest.

(m) In the case of joint loans, the personal liability for the amounts specified in this section shall be joint and several on the part of each producer signing the loan note. Further, each producer who is a party to a joint loan will be jointly and severally liable for any violation of the terms and conditions of the note and security agreement, and the regulations set forth in this part. Each such producer shall also remain liable for repayment of the entire loan amount until the loan is fully repaid without regard to such producer's claimed share in the honey, or loan proceeds, after execution of the note and security agreement by CCC.

(n) Any or all of the liquidated damages assessed in accordance with the provisions of paragraph (c) of this section may be waived as determined by CCC.

(o) Remedies set out here are in addition to remedies the CCC will have through its security interest on honey which secures the repayment of the loan made on the honey.

(p) All remedies provided for in this section or part are in addition to any remedies as may otherwise be provided for in law.

§ 1434.14 Release of the honey pledged as collateral for a loan.

(a)(1) A producer shall not move or dispose of any honey pledged as collateral for a loan until prior written approval for such removal or disposition has been received from the county committee in accordance with this section.

(2) A producer may at any time obtain a release of all or part of the honey remaining as loan collateral by paying to CCC the amount of the loan and any charges which had been made by CCC to the producer with respect to the quantity of the honey released, plus interest.

(3) When the proceeds of a sale of honey are needed to repay all or part of a loan, the producer must request and obtain prior written approval of the county office on a form prescribed by CCC in order to remove a specified quantity of the honey from storage. Any such approval shall be subject to the terms and conditions set forth in the applicable form, copies of which may be obtained by producers at the county office. Any such approval shall not constitute a release of CCC's security interest in the commodity or release the producer from liability for any amounts due and owing to CCC with respect to any loan indebtedness if full payment of such amounts is not received by the county office.

(b) The note and security agreement shall not be released until all loan liability has been satisfied in full.

(c) After satisfaction of a loan, CCC shall release CCC's security interest in the honey at the producer's request. The producer shall be responsible for payment of any fee for such release if such fee can be determined.

§ 1434.15 Liquidation of loans.

(a) The producer is required to repay the loan on or before maturity by payment of the amount of loan, plus any charges, plus interest.

(b) If a producer fails to settle the loan in accordance with paragraph (a) of this section within 30 calendar days from the maturity date of such loan, or other reasonable time period as established by CCC, a claim for the loan amount, plus charges, plus interest shall be established. CCC shall inform the producer before the maturity date of the loan of the date by which the loan must be settled or a claim will be established in accordance with part 1403 of this title.

§ 1434.16 Foreclosure.

(a) Upon maturity and nonpayment of the loan, title to the unredeemed honey securing the loan shall vest in CCC.

(b) If the total amount due on a loan or the unpaid amount of the note and charges, plus interest is not satisfied upon maturity, CCC may remove the honey from storage and assign, transfer, and deliver the honey or documents evidencing title thereto at such time, in such manner, and upon such terms as CCC may determine at public or private sale. Any such disposition may also be effected without removing the honey from storage. The honey may be processed before sale and CCC may

become the purchaser of the whole or any part of the honey at either a public or private sale.

(c) If the honey is removed from storage by CCC and is sold, the value of the settlement shall be the proceeds from the sale of the honey minus costs associated with the disposition of the honey and shall be applied to the amount owed CCC by the producer; and

(1) If the value of the collateral computed at settlement is less than the amount due, the producer shall pay to CCC the amount of such deficiency and charges, plus interest on such deficiency and CCC may take any action against the producer to recover the deficiency; or

(2) If the proceeds received from the sale of the honey so computed are greater than the sum of the amount due plus any cost incurred by CCC in conducting the sale of the honey, such excess shall be paid to the producer or, if applicable, to any secured creditor of the producer.

§ 1434.17 Handling payments and collections not exceeding $9.99.

In order to avoid administrative costs of making small payments and handling small accounts, amounts of $9.99 or less which are due the producer will be paid only upon the producer's request. Deficiencies of $9.99 or less, including interest, may be disregarded unless demand for payment is made by CCC.

§ 1434.18 Death, incompetency, or disappearance; appeals; other loan provisions.

(a) In the case of death, incompetency, or disappearance of any producer who is entitled to the payment of any sum in settlement of a loan, payment shall, upon proper application to the county office which made the loan, be made to the persons who would be entitled to such producer's share under the regulations contained in part 707 of this title. Applications for loans may be made upon application of a representative of the producer as allowed under standard practice for farm programs.

(b) Appeals of adverse decisions made under this part shall be subject to the provisions of 7 CFR parts 11 and 780.

(c) The Executive Vice President, CCC, may impose such additional loan conditions as are determined to be necessary or appropriate to insure that the purposes and goals of the program provided for in this part are met.

Signed at Washington, D.C., on March 2, 1999.

Keith Kelly,

Executive Vice President, Commodity Credit Corporation.

[FR Doc. 99–5557 Filed 3–3–99; 12:57 pm]

BILLING CODE 3410–05–P

DEPARTMENT OF AGRICULTURE

Commodity Credit Corporation

7 CFR Part 1469

RIN 0560–AF63

Recourse Loan Regulations for Mohair

AGENCY: Commodity Credit Corporation, USDA.

ACTION: Final rule.

SUMMARY: In accordance with the Omnibus Consolidated and Emergency Supplemental Appropriations Act, 1999, this final rule sets forth the regulations for a recourse loan program for mohair. The program will be conducted during the 1999 fiscal year and applies to mohair produced during and before the 1999 fiscal year.

DATES: Effective March 3, 1999.

FOR FURTHER INFORMATION CONTACT: Margaret Wright, Program Specialist, Farm Service Agency (FSA), USDA, STOP 0512, 1400 Independence Avenue, SW, Washington, D.C. 20250–0512; telephone: (202) 720–8481.

SUPPLEMENTARY INFORMATION:

Executive Order 12866

This rule is in conformance with Executive Order 12866 and has been determined to be significant and therefore has been reviewed by the Office of Management and Budget.

Federal Assistance Program

The title and number of the Federal Assistance Program, as found in the Catalog of Federal Domestic Assistance, to which this rule applies, are Commodity Loans and Purchases—10.051.

Environmental Evaluation

It has been determined by an environmental evaluation that this action will have no significant impact on the quality of the human environment. Therefore, neither an environmental assessment nor an environmental impact statement is needed.

Executive Order 12372

This activity is not subject to the provisions of Executive Order 12372, which requires intergovernmental consultation with State and local officials. See the notice related to 7 CFR part 3014, subpart V, published at 48 FR 29115 (June 24, 1983).

Executive Order 12988

This final rule has been reviewed in accordance with Executive Order 12988. The provisions of this final rule are not retroactive and preempt State laws to the extent that such laws are inconsistent with the provisions of the final rule. Before any legal action is brought regarding determinations made under provisions of 7 CFR part 723, the administrative appeal provisions set forth at 7 CFR part 780 must be exhausted.

Regulatory Flexibility Act

It has been determined that the Regulatory Flexibility Act is not applicable to this final rule since the Commodity Credit Corporation (CCC) is not required by 5 U.S.C. 553 or any other provision of law to publish a notice of proposed rule making with respect to the subject matter of this rule.

Unfunded Federal Mandates

This rule contains no Federal mandates under the regulatory provisions of Title II of the Unfunded Mandate Reform Act of 1995 (UMRA) for State, local, and tribal governments or the private sector. Thus, this rule is not subject to the requirements of sections 202 and 205 of the UMRA.

Paperwork Reduction Act and Notice and Comment

Section 1133 of the Omnibus Consolidated and Emergency Supplemental Appropriations Act, 1999 (1999 Act) provides that this rule-making shall be issued without regard to the public notice and comment provisions of section 5 U.S.C. 553 or the Paperwork Reduction Act, and provides that the provisions of 5 U.S.C. 808 which allows exemption from layovers for Congressional review shall be applied. Accordingly this rule and its information collection requirements are made effective immediately in accordance with these provisions. Because of the foregoing provisions and because this rule provides needed time-sensitive relief, delay in completing this rule would be contrary to the public interest.

Background

Section 1126 of the 1999 Act provides that the Secretary of Agriculture (Secretary) shall make available recourse loans, as determined by the Secretary, to producers of mohair produced during or before that fiscal

year. This final rule contains the terms and conditions that the Secretary has determined are necessary to implement Sec. 1126 of the 1999 Act. The terms and conditions focus on three critical issues: (1) eligibility, (2) adequate loan collateralization, and (3) program administration.

Eligibility

Section 1469.4 lists the eligibility requirements for both the persons applying for a recourse loan (loan) and for the mohair being tendered as loan collateral. The essence of the eligibility requirements with respect to loan applicants is that they must be ''producers'' of mohair and not speculators who have purchased the mohair. In general, a loan applicant must have a separate and identifiable interest in both the goats and the mohair. This means, in part, as defined in the regulations, that the loan applicant must have been responsible for the financial risk of raising the animal(s) and of producing the mohair, and must have owned, at time of shearing and for the previous 180 calendar days (or less, if the kids are younger), in the United States, the goats from which the mohair was shorn. The 180 calendar day requirement begins to run for imported goats after their quarantine period ends. In any case, regardless of the period the goat is held, loan applicants will be ineligible for a loan if the goats that produced the mohair were imported to provide meat.

The loan applicant must also hold a beneficial interest in the mohair collateral until the loan is paid. Under the regulations, such an interest will require that the producer maintains title and control over the disposition of the mohair, as well as the risk of loss on the mohair.

Persons handling the marketing of the mohair through a CCC-approved cooperative marketing association (CMA) are also eligible to participate in the loan program, provided the beneficial interest in the mohair remains with the CMA member/loan applicant who shares in the marketing proceeds realized by the CMA. Two or more applicants may be eligible for a joint loan if, as individuals, they would fulfill the eligibility requirements and the commingled mohair is not already under a CCC loan.

With respect to the mohair itself, these regulations apply to mohair produced before and during the 1999 fiscal year. However, mohair that was used to qualify for an incentive payment under the previous mohair payment program, which was terminated by Pub. L. 103–130, is only eligible to be tendered as collateral for a loan under these regulations if the incentive payment has been repaid to CCC. In addition, the mohair pledged as loan collateral must be stored in a warehouse carrying adequate insurance to cover the mohair and must be contained in standard burlap mohair bags identified by signed and dated receipts and other warehouse records provided by the warehouse.

Collateralization

Section 1126(3) of the 1999 Act provides that the loan rate for mohair ''shall be equal to $2 per pound'' and requires that it be a recourse loan. Because certain mohair may not generate sufficient revenue to allow for full loan repayment, CCC shall retain (and the producer must agree that CCC may retain) a first and superior security interest on all of a loan recipient's existing and future production of mohair, until the loan and all related charges are paid; the security interest will not be restricted to the mohair actually used for calculating the loan amount but shall cover all mohair of the producer. Mohair used in calculating this amount is referred to as ''loan mohair'' and all other mohair of the producer is referred to as ''non-loan mohair'' although ''non-loan mohair'' may be subject to CCC's security interests. CCC will determine when to apply proceeds of sales of non-loan mohair which secures the loan against the loan amounts, but it is expected that the proceeds from the sale of non-loan mohair will not be required in advance of the maturity date of the loan and the county office will be authorized to sign a waiver of CCC's security interest for the sale of the non-loan mohair.

Also, producers will be required to make certain representations concerning loan repayment as may be needed to provide adequate security for the loans with the representations being enforceable by remedies that apply to false or misleading statements made to obtain federal benefits. While the loan is interest-free, as compelled by statute, interest charges and costs will accrue on amounts outstanding after maturity and may accrue from the date of loan disbursement if it is determined that the producer was ineligible for the loan, committed a loan violation, or obtained the loan on false or misleading pretenses.

In the event that the loan recipient's present production capability is such that a security interest on production is not deemed to be sufficient security, or if the loan is otherwise considered to be insufficiently secured, the CCC, as determined appropriate by the Executive Vice President, CCC, may require the loan recipient to agree that 75 cents per pound, or such other amount as may otherwise be deemed appropriate by the Executive Vice President (taking into consideration the market value of the mohair and other factors) may be deducted from the loan to provide additional security to CCC. Loan recipients, in lieu of such reduction, may provide an acceptable letter of credit, bond, or other form of security for the reduction amount, if approved by CCC.

CCC may foreclose on the collateralized mohair and other mohair subject to a security interest and sell it if the loan is not repaid. The government may also pursue other options open to it, including remedies against persons handling loan mohair in disregard of the security interest.

Program Administration

In accordance with the 1999 Act, loans will be made only during the 1999 fiscal year and will mature 12 months after they are made. CCC has determined that the final date to request a loan will be September 30, 1999. Anyone interested in applying for a loan and who has questions concerning eligibility or any other matter covered under this regulation will be able to obtain assistance from their local county FSA office.

Any loan recipient seeking to sell any mohair loan collateral to repay the loan will be required to obtain written authorization from the county office before moving the mohair for sale. If the loan recipient fails to obtain such authorization, or has also provided incorrect certifications or made fraudulent representations, that person will be in violation of the terms and conditions of the loan note and security agreement and will be subject to liquidated damages and other actions as provided in § 1469.11 of the regulations. These remedies are in addition to the obligation to repay the loan.

List of Subjects in 7 CFR Part 1469

Mohair, Loan programs/agriculture, Reporting and record keeping requirements, Warehouses.

Accordingly, 7 CFR part 1469 is added to chapter XIV, subchapter B, to read as follows:

PART 1469—RECOURSE LOAN REGULATIONS FOR MOHAIR

Sec.

1469.1 Applicability.
1469.2 Administration.
1469.3 Definitions.
1469.4 Eligibility.

1469.5 Application, availability, disbursement, and maturity.
1469.6 Security interests.
1469.7 Fees.
1469.8 Determination of quantity.
1469.9 Transfer of producer's interest prohibited.
1469.10 Loss or damage.
1469.11 Personal liability of the producer.
1469.12 Release of the mohair pledged as collateral for a loan.
1469.13 Liquidation of loans.
1469.14 Foreclosure.
1469.15 Handling payments and collections not exceeding $9.99.
1469.16 Death, incompetency, or disappearance; other regulations, additional loan provisions.

Authority: Section 1126, Pub. L. 105–277, 112 Stat. 2681.

§ 1469.1 Applicability.

The regulations of this part provide the terms and conditions under which the Commodity Credit Corporation (CCC) may issue recourse loans for mohair which was both produced during or before fiscal year 1999, and has remained continuously within the beneficial interest of the producer. Additional terms and conditions that must be followed to obtain a loan will be set forth in the applicable note and security agreements. All forms needed to obtain a loan will be available from State and county Farm Service Agency (State and county) offices.

§ 1469.2 Administration.

(a) The regulations of this part shall be administered under the general supervision of the Executive Vice President, CCC, and shall be carried out in the field by State and county committees.

(b) State and county committees, and representatives and employees thereof, do not have the authority to modify or waive any of the provisions of the regulations of this part.

(c) The State committee shall take any action required by these regulations that has not been taken by the county committee. The State committee shall also:

(1) Correct, or require a county committee to correct, any action taken by such county committee that is not in accordance with the regulations of this part; or

(2) Require a county committee to withhold taking any action that is not in accordance with the regulations of this part.

(d) No provision or delegation herein to a State or county committee shall preclude the Executive Vice President, CCC, or a designee, from determining any question arising under the program or from reversing or modifying any determination made by a State or county committee.

(e) The Deputy Administrator for Farm Programs, Farm Service Agency, may authorize State and county committees to waive or modify deadlines and other program requirements in cases where timeliness or failure to meet such other requirements does not adversely affect the operation of the program.

(f) An approving official may execute loans and related documents only under the terms and conditions determined and announced by CCC. Any such document that is not executed in accordance with such terms and conditions, including any purported execution before the date authorized by CCC, shall be null and void unless affirmed by the Executive Vice President, CCC.

§ 1469.3 Definitions.

The definitions set forth in this section shall be applicable for all purposes of program administration. The terms defined in part 718 of this title shall also be applicable except where those definitions conflict with the definitions set forth in this section or in program instruments created under this part.

Administrator is the FSA Administrator.

Approving official is a representative of CCC who is authorized by the Executive Vice President, CCC, to approve loan documents prepared under this part.

CMA is a cooperative marketing association engaged in marketing mohair.

County office is the local FSA office.

FSA is the Farm Service Agency, United States Department of Agriculture.

Goat is an adult Angora goat or the kid of an Angora goat.

Loan is a recourse loan on mohair.

Loan quantity is the quantity on which the loan was disbursed, as shown on the note and security agreement.

Loan mohair is the quantity of mohair tendered by an eligible producer that is used in calculating the amount the loan.

Mohair is the hair sheared from a live goat before applying any process that removes the natural oils or fats or produces a mohair product. Mohair does not include pelts or hides or grease mohair shorn from pelts or hides, scoured, carbonized, or dyed mohair or yarn, skeins or other mohair which is identified for marketing by terms which identify the mohair as being other than in its natural greasy state.

Non-loan mohair is mohair securing a loan made under this part that was not used in calculating the amount of a loan made under this part.

Ownership is control, title, risk of loss, and the right to make all decisions regarding the tender of mohair to CCC for a loan or for marketing.

Person is the individual, partnership, association, corporation, estate or trust, or other business enterprise or other legal entity and, whenever applicable a State, political subdivision of a State, or any agency thereof.

Program is the administration and issuance of a loan in accordance with the terms and conditions of this part and of any note and security agreement which must be executed by a loan recipient under this part.

Representative is a receiver, executor, administrator, guardian, or trustee representing the interests of a person or an estate.

State committee is the FSA committee so designated for the applicable state.

§ 1469.4 Eligibility.

(a) To be eligible to receive an individual or joint loan under this part, a person must:

(1) Own, other than through a security interest, mortgage, or lien, the goats that produced the mohair which is the basis for the loan sought under this part, which goats must be of domestic origin or imported for purposes other than for slaughter and which in all cases were located in the United States for a period of not less than 180 calendar days (excluding days in quarantine if imported) prior to shearing, except that kids younger than 180 calendar days must be located in the United States from birth to shearing;

(2) Share in the risk of raising and shearing the goats;

(3) Comply with subsection (h) of this section;

(4) Store the mohair pledged as loan collateral in a warehouse:

(i) In standard burlap wool and mohair bags identified by signed and dated receipts provided by the warehouse and other warehouse records, in which the warehouse certifies to CCC the name of the person requesting the loan, lot number, number of bags in storage, and net weight; and

(ii) Which has certified to CCC that it carries insurance to cover the stored mohair or can provide some other type of financial assurance;

(5) Adequately protect the interests of CCC by providing security for a loan in accordance with the requirements in §§ 1469.5 and 1469.6 which is superior to all other security interests and by maintaining in good condition the mohair pledged as security for a loan;

(6) Be accurate and truthful and not make any misrepresentations with

respect to any information provided to CCC concerning any activity covered by this part;

(7) Not have been convicted of a crime as provided in part 718 of this title; and

(8) Not have received an incentive payment under the previous mohair payment program for a quantity of mohair pledged as loan collateral covered by this part, unless the incentive payment is repaid to CCC.

(b) Loan mohair must be mohair of merchantable quality deemed by CCC to be suitable for a loan and must have been shorn in the United States and not shorn while the producing goat was in quarantine.

(c) Two or more applicants may be eligible for a joint loan if:

(1) The conditions in paragraphs (a) and (b) of this section are met with respect to the commingled mohair they are tendering for a loan; and

(2) The commingled mohair is not used as collateral for an individual loan that has not been repaid.

(d) Heirs who succeed to a beneficial interest in the mohair are eligible for a loan if they:

(1) Assume the decedent's obligation under a loan if such loan has already been obtained; and

(2) Assure continued safe storage of the loan mohair if such mohair has been pledged as collateral for a loan.

(e) A representative may be eligible to receive a loan on behalf of a person or estate who or which meets the requirements in paragraphs (a), (b), (c), and (d) of this section, and the mohair tendered as collateral by the representative, in his capacity as a representative, shall be considered as tendered by the person or estate being represented.

(f) A minor who otherwise meets the requirements of this part for a loan shall be eligible to receive a loan only if the minor meets one of the following requirements:

(1) A court or statute has conferred the right of majority on the minor;

(2) A guardian has been appointed to manage the minor's property, and the applicable loan documents are signed by the guardian;

(3) Any note signed by the minor is cosigned by a person determined by the county committee to be financially responsible; or

(4) A surety, by furnishing a bond, guarantees to protect CCC from any loss incurred for which the minor would be liable had the minor been an adult.

(g) A CMA which the Executive Vice President, CCC, determines meets the requirements for CMA's in part 1425 of this title may be eligible to obtain a loan on behalf of those members who themselves are eligible to obtain a loan provided that:

(1) The beneficial interest in the mohair must always, until loan repayment or forfeiture, remain in the member who delivered the mohair to the eligible CMA or its member CMA's, except as otherwise provided in this part; and

(2) The mohair delivered to an eligible CMA shall establish eligibility for a loan if the member who delivered the mohair does not retain the right to share in the proceeds from the marketing of the mohair as provided in part 1425 of this title.

(h)(1) To be eligible to receive loans under this part a producer must have the beneficial interest in the mohair that is tendered to CCC for a loan. The producer must always have had the beneficial interest in the mohair unless, before the mohair was sheared, the producer and a former producer whom the producer tendering the mohair to CCC has succeeded had such an interest in the mohair. Mohair obtained by gift or purchase shall not be eligible to be tendered to CCC for loans. Heirs who succeed to the beneficial interest of a deceased producer or who assume the decedent's obligations under an existing loan shall be eligible to receive loans whether succession to the mohair occurs before or after shearing so long as the heir otherwise complies with the provisions of this part.

(2) A producer shall not be considered to have divested the beneficial interest in the mohair if the producer retains control, title, and risk of loss in the mohair including the right to make all decisions regarding the tender of such mohair to CCC for a loan, and the producer takes one of the following actions:

(i) Executes an option to purchase, whether or not a payment is made by the potential buyer for such option to purchase, with respect to such mohair if all other eligibility requirements are met and the option to purchase contains the following provision:

> Not withstanding any other provision of this option to purchase, title, risk of loss, and beneficial interest in the mohair, as specified in 7 CFR part 1469, shall remain with the producer until the buyer exercises this option to purchase the mohair. This option to purchase shall expire, notwithstanding any action or inaction by either the producer or the buyer, at the earlier of: (1) the maturity of any CCC loan which is secured by such mohair; (2) the date the CCC claims title to such mohair; or (3) such other date as provided in this option.

(ii) Enters into a contract to sell the mohair if the producer retains title, risk of loss, and beneficial interest in the mohair and the purchaser does not pay to the producer any advance payment amount or any incentive payment amount to enter into such contract except as provided in part 1425 of this chapter.

(3) If loans are made available to producers through an approved CMA in accordance with part 1425 of this chapter, the beneficial interest in the mohair must always have been in the producer-member who delivered the mohair to the CMA or its member CMA's, except as otherwise provided in this section. Mohair delivered to such a CMA shall not be eligible for loans if the producer-member who delivered the mohair does not retain the right to share in the proceeds from the marketing of the mohair as provided in part 1425 of this chapter.

(i) A producer may, before the final date for obtaining a loan for mohair, re-offer as loan mohair any mohair that has been previously pledged as loan mohair except that the loan on such re-offered mohair shall have the same maturity date as the original loan.

§ 1469.5 Application, availability, disbursement, and maturity.

(a) The deadline for requesting a loan offered under this part is September 30, 1999.

(b) Loans mature on demand but not later than the last day of the twelfth calendar month following the month in which the note and security agreement was approved. When the final maturity date falls on a non-workday for county offices, CCC shall extend the final date to the next workday.

(c) A producer must request loans on mohair at the county office serving the county where the headquarters of the producer's farm, ranch, or feed lot is located. If the producer has more than one farm, ranch, or feed lot, with headquarters in more than one county, separate non-duplicative applications for loans may be filed with the county office serving each such headquarters covering only the mohair at each such location. A CMA must request loans at the county office for the county in which the principal office of the CMA is located unless the State committee designates another county office. If the CMA has operations in two or more States, the CMA must file its loan applications at the county office for the county in which its principal office for each State is located.

(d) Loans will be made on the mohair (i.e., adult, yearling, spring kid, fall kid) as declared and certified by the producer on Form CCC–633 (Mohair), (Mohair Loan Certification and

Worksheet) at the time the mohair is pledged as collateral for a loan.

(e) CCC shall not approve a loan application until the producer provides adequate assurance that the loan and all related charges will be paid to CCC in accordance with paragraph (f) of this section. The disbursement of loans will be made by county offices on behalf of CCC.

(f) The loan rate under this part shall be $2 per pound for all mohair eligible to be pledged as collateral under this part. Until the loan and all related charges have been paid, CCC shall retain (and the producer shall agree that CCC shall retain) a first and superior security interest on all of the producer's current and future production of mohair, the security interest shall not be restricted to the mohair used in calculating the amount of the loan but shall cover all mohair (current and future) owned by the producer. Proceeds from the sale of loan mohair will be applied to the loan. Proceeds from the sale of non-loan mohair in which CCC holds a security interest will be applied to the loan only if the proceeds from the sale of the loan mohair are inadequate to pay the loan in full. The security interest shall also apply to the current and future mohair production of affiliated producers as defined in this part. CCC may require such additional security as it deems needed to assure repayment of the loan. In the event that the producer's present capability for producing mohair is such that a security interest on the producer's current and future production of mohair is not deemed to be sufficient, or if the loan is otherwise considered to be insufficiently secured, the CCC, as determined by the Executive Vice President, CCC, may require that 75 cents per pound, or such other amount as may be deemed appropriate by the Executive Vice President (taking into consideration the market value of the mohair) be deducted from the loan to provide additional security. Producers, in lieu of such reduction, may provide a letter of credit, bond, or other form of security for the reduction amount, as approved by CCC. The Executive Vice President, CCC, may allow for releases from the security interest provided for in this section as needed to accomplish the goals of the program, and require the necessary assurances to determine the future production capability of a producer seeking a loan under this part.

(g) If, after a loan is made, CCC determines that the producer or the mohair collateral is not in compliance with any of the provisions of this part, the producer shall refund the total amount disbursed under loan together with interest and other charges as may apply, including late payment interest as provided in part 1403 of this title.

§ 1469.6 Security interests.

(a) CCC's security interest in the mohair pledged as collateral is first and superior to all other security interests.

(b) The county office may file or record, as required by State law, all financing statements needed to perfect a security interest in mohair pledged as collateral for loans. The cost of filing and recording shall be for the account of CCC.

(c) If there are any security interests or encumbrances on the mohair, waivers that fully protect the interest of CCC must be obtained. For non-loan mohair which is subject to the security interest provided for in this part, CCC may require waivers of pre-existing security interests.

§ 1469.7 Fees.

A producer shall pay a non-refundable loan service fee to CCC at a rate determined by CCC. The amount of such fees will be available in State and county offices.

§ 1469.8 Determination of quantity.

The amount of a loan on the quantity of eligible loan mohair shall be based on 100 percent of the net weight in pounds of such quantity certified by the producer and verified by the warehouse for mohair which is pledged as security for the loan and covered by the note and security agreement.

§ 1469.9 Transfer of producer's interest prohibited.

Absent written approval from CCC, the producer shall not transfer either the remaining interest in, or right to redeem, the mohair pledged as collateral for a loan nor shall anyone acquire such interest or right. Subject to the provisions of § 1469.12, a producer who wishes to liquidate all or part of a loan by contracting for the sale of the loan mohair must obtain written approval of the county office on a form prescribed by CCC to remove a specified quantity of the mohair from storage. Any such approval shall be subject to the terms and conditions set forth in the applicable form, copies of which may be obtained by producers at the county office.

§ 1469.10 Loss or damage.

The producer is responsible for any loss in quantity or quality of the mohair pledged as collateral for a loan. CCC shall not assume any loss in quantity or quality of the loan collateral.

§ 1469.11 Personal liability of the producer.

(a) When applying for an individual or joint loan, each producer agrees:

(1) When signing any document, including Form CCC–633 (Mohair), (Mohair Loan Certification and Worksheet) and Form CCC–677 (Farm Storage Note and Security Agreement), that the producer will:

(i) Provide correct, accurate, and truthful certifications and representations of the loan quantity and all other matters of fact and interest; and

(ii) Not remove or dispose of any amount of the loan quantity without prior written approval from CCC in accordance with this section; and

(2) That violation of the terms and conditions of this part and Form CCC–677 will cause harm or damage to CCC in that funds may be disbursed to the producer for a loan quantity which is not actually in existence or for an amount of mohair for which the producer is not eligible.

(b) For purposes of this section, a ''violation'' shall refer to any violation of the loan agreement and this part which shall include, but not be limited to, any incorrect certification made with respect to obtaining a loan, any misrepresentation with respect to a loan, or any mis-disposition of loan collateral.

(c) The producer and CCC agree that it will be difficult, if not impossible, to prove the amount of damages to CCC for conduct which is in violation of this part or the loan agreement. Accordingly, if the county committee determines that the producer has engaged in any such violation, liquidated damages shall be assessed and shall be due in addition to any loan refund that may be due plus interest and charges. The amount of such liquidated damages shall be computed using the quantity of mohair that is involved in the violation and the formula set out below. If CCC determines the producer:

(1) Acted in good faith when the violation occurred, liquidated damages will be assessed by multiplying the quantity of mohair involved in the violation by:

(i) 10 percent of the loan rate applicable to the loan note for the first offense; or

(ii) 25 percent of the loan rate applicable to the loan note for the second offense; or

(2) Did not act in good faith with regard to the violation, or for cases other than the first or second offense, liquidated damages will be assessed by multiplying the quantity involved in the violation by 25 percent of the loan rate applicable to the loan note.

(d) For liquidated damages assessed in accordance with paragraph (c)(1) of this section, the county committee shall:

(1) Require repayment of the loan principal applicable to the loan quantity which was the subject of the violation plus charges, plus interest applicable to the amount repaid; and

(2) If the producer fails to pay such amount within 30 calendar days from the date of notification, call the applicable loan in its entirety, plus charges, plus interest assessed from the date of the loan disbursement.

(e) For liquidated damages assessed in accordance with paragraph (c)(2) of this section, the county committee shall call the entirety of the loan, plus charges, plus interest assessed from the date of the loan disbursement.

(f) The county committee:

(1) May waive the administrative actions taken in accordance with paragraphs (c)(1) and (d) of this section if the county committee determines that the violation occurred inadvertently, accidentally, or unintentionally.

(2) Shall furnish a copy of its determination to the State committee, and the Administrator. If the determination of the county committee is not disapproved by either the State committee or the Administrator, or a designee, within 60 calendar days from the date the determination is received, such determination may be considered to have been approved unless the Administrator issues procedures that allow for more time, or decides in an individual case that more time is needed.

(g) If, there is any violation of the loan agreement or this part, the loan may be terminated in which case there must be a full refund of the loan plus interest, and costs.

(h) If the county committee determines that the producer has violated this part or the loan agreement, the county committee shall notify the producer in writing that:

(1) The producer has 30 calendar days to provide evidence and information regarding the circumstances which caused the violation, to the county committee, and

(2) Administrative actions will be taken in accordance with paragraph (d) or (e) of this section.

(i)(1) If a producer makes any fraudulent or misleading representation in obtaining, maintaining, or settling a loan, the producer shall be liable for:

(i) The amount of the loan;

(ii) Any additional amounts paid by CCC with respect to the loan;

(iii) All other costs which CCC would not have incurred but for the fraudulent representation;

(iv) Interest from the date of the loan disbursement;

(v) Late payment interest as may be provided for in part 1403 of this title; and

(vi) Liquidated damages assessed under paragraph (c) of this section; and

(2) Notwithstanding any provisions of the note and security agreement, if a producer has made any such fraudulent or misleading representation to CCC, the value of the settlement for such collateral removed by CCC shall be determined by CCC according to § 1469.14.

(j) If the amount disbursed under a loan or in settlement thereof, exceeds the amount authorized under this part, the producer shall be personally liable for repayment of such excess, plus charges, plus interest, and for any other sanction as may be allowed by law.

(k) If the amount collected from the producer in satisfaction of the loan is less than the amount required in accordance with this part, the producer shall be personally liable for repayment of the amount of such deficiency plus charges, plus interest.

(l) In the case of joint loans, the personal liability for the amounts specified in this section shall be joint and several on the part of each producer signing or responsible under the loan note. Further, each producer who is a party to a joint loan will be jointly and severally liable for any violation of the terms and conditions of the note, security agreement, and the regulations set forth in this part. Each such producer shall also remain liable for repayment of the entire loan amount until the loan is fully repaid without regard to such producer's claimed share in the mohair, or loan proceeds, after execution of the note and security agreement by CCC.

(m) Any or all of the liquidated damages assessed in accordance with the provisions of paragraph (c) of this section may be waived by CCC.

(n) Remedies set out here are in addition to remedies the CCC will have through its security interest on non-loan mohair which secures the repayment of the loan made on the loan mohair.

(o) All remedies provided for in this section or part are in addition to any remedies as may otherwise be provided for in law.

§ 1469.12 Release of the mohair pledged as collateral for a loan.

(a)(1) A producer shall not move or dispose of any loan mohair pledged as collateral for a loan until prior written approval for such removal or disposition has been received from the county committee in accordance with this section.

(2) A producer may at any time obtain a release of all or part of the mohair remaining as loan collateral by paying to CCC the amount of the loan and any charges which had been made by CCC to the producer with respect to the quantity of the loan mohair released.

(3) When the proceeds of a sale of loan mohair are needed to repay all or part of a loan, the producer must request and obtain prior written approval of the county office on a form prescribed by CCC in order to remove a specified quantity of the mohair from storage. Any such approval shall be subject to the terms and conditions set forth in the applicable form, copies of which may be obtained by producers at the county office. Any such approval shall not constitute a release of CCC's security interest in the commodity or release the producer from liability for any amounts due and owing to CCC with respect to any loan indebtedness. With respect to non-loan mohair securing the loan, CCC may, in its discretion, release its security interest in the mohair if there are no loan amounts overdue at the time of the release.

(b) The note and security agreement shall not be released until all loan liability has been satisfied in full.

(c) After satisfaction of a loan, CCC shall release CCC's security interest in the mohair at the producer's request. The producer shall be responsible for payment of any fee for such release if such fee can be determined.

§ 1469.13 Liquidation of loans.

(a) The producer is required to repay the loan on or before maturity by payment of the amount of loan, plus any charges.

(b) If a producer fails to settle the loan in accordance with paragraph (a) of this section within 30 calendar days from the maturity date of such loan, or other reasonable time period as established by CCC, a claim for the loan amount plus charges, plus interest shall be established. Interest shall accrue from the next calendar day after the maturity date. CCC shall inform the producer before the maturity date of the loan of the date by which the loan must be settled or a claim will be established in accordance with part 1403 of this title. A failure to pay timely will start the accrual of interest, late payment interest, and costs.

§ 1469.14 Foreclosure.

(a) Upon maturity and nonpayment of the loan, title to the unredeemed loan mohair securing the loan shall vest in CCC.

(b) If the total amount due on a loan or the unpaid amount of the note and charges is not satisfied upon maturity, CCC may remove the loan mohair from storage and assign, transfer, and deliver the mohair or documents evidencing title thereto at such time, in such manner, and upon such terms as CCC may determine at a public or private sale. Any such disposition may also be effected without removing the mohair from storage. CCC may become the purchaser of the whole or any part of the mohair at either a public or private sale.

(c) If the mohair is removed from storage by CCC and is sold, the value of the settlement shall be the proceeds from the sale of the mohair minus costs associated with the disposition of the mohair, and:

(1) If the value of the collateral computed at settlement is less than the amount due, the producer shall pay to CCC the amount of such deficiency plus charges, plus interest on such deficiency and CCC may take any action against the producer to recover the deficiency; or

(2) If the proceeds received from the sale of the loan mohair so computed are greater than the sum of the amount due, such excess shall be paid to the producer or, if applicable, to any secured creditor of the producer.

(d) In addition, CCC may take any action with respect to non-loan mohair as may be needed to assure collection of all loans including, if need be, possession of the mohair. Nothing in this section of this part shall constitute a waiver of its lien on such mohair except when an express waiver has been executed by CCC. Absent such a waiver, all proceeds from such mohair shall be the property of CCC until the producer's loans have been repaid in full.

§ 1469.15 Handling payments and collections not exceeding $9.99.

In order to avoid administrative costs of making small payments and handling small accounts, amounts of $9.99 or less which are due the producer will be paid only upon the producer's request. Deficiencies of $9.99 or less may be disregarded by CCC unless demand for payment is made by CCC.

§ 1469.16 Death, incompetency, or disappearance; other regulations, additional loan provisions.

(a) In the case of death, incompetency, or disappearance of any producer who is entitled to the payment of any sum in settlement of a loan, payment shall, upon proper application to the county office which made the loan, be made to the persons who would be entitled to such producer's share under the regulations contained in part 707 of this title. Applications for loans may be made upon application of a representative of the producer as allowed under standard practice for farm programs.

(b) Appeals of adverse decisions made under this part shall be subject to the provisions of 7 CFR parts 11 and 780.

(c) The Executive Vice President, CCC, may impose such additional loan conditions as are determined to be necessary or appropriate to insure that the purposes and goals of the program provided for in this part are met.

Signed at Washington, D.C., on March 2, 1999.

Keith Kelly,

Executive Vice President, Commodity Credit Corporation.

[FR Doc. 99–5558 Filed 3–3–99; 3:20 pm]

BILLING CODE 3410–05–P

DEPARTMENT OF TRANSPORTATION

Federal Aviation Administration

14 CFR Part 39

[Docket No. 99–NM–09–AD; Amendment 39–11063; AD 99–05–15]

RIN 2120–AA64

Airworthiness Directives; Boeing Model 737–100, –200, –200C, –300, –400, and –500 Series Airplanes

AGENCY: Federal Aviation Administration, DOT.

ACTION: Final rule; request for comments.

SUMMARY: This amendment adopts a new airworthiness directive (AD) that is applicable to certain Boeing Model 737–100, –200, –200C, –300, –400, and –500 series airplanes. This action requires a one-time inspection of the attachment nuts at each end attachment of the elevator tab push rods to measure run-on torque values, and corrective actions, if necessary. This amendment is prompted by reports of excessive high-frequency airframe vibration during flight, with consequent structural damage to the elevator tab, elevator, and stabilizer. The actions specified in this AD are intended to prevent detachment of an elevator tab push rod due to a detached nut at either end attachment of a push rod, which could result in excessive high-frequency airframe vibration during flight; consequent structural damage to the elevator tab, elevator, and horizontal stabilizer; and reduced controllability of the airplane.

DATES: Effective March 23, 1999.

The incorporation by reference of certain publications listed in the regulations is approved by the Director of the **Federal Register** as of March 23, 1999.

Comments for inclusion in the Rules Docket must be received on or before May 7, 1999.

ADDRESSES: Submit comments in triplicate to the Federal Aviation Administration (FAA), Transport Airplane Directorate, ANM–114, Attention: Rules Docket No. 99–NM–09–AD, 1601 Lind Avenue, SW., Renton, Washington 98055–4056.

The service information referenced in this AD may be obtained from Boeing Commercial Airplane Group, P.O. Box 3707, Seattle, Washington 98124–2207. This information may be examined at the FAA, Transport Airplane Directorate, 1601 Lind Avenue, SW., Renton, Washington; or at the Office of the Federal Register, 800 North Capitol Street, NW., suite 700, Washington, DC.

FOR FURTHER INFORMATION CONTACT: Greg Schneider, Aerospace Engineer, Airframe Branch, ANM–120S; FAA, Transport Airplane Directorate, Seattle Aircraft Certification Office, 1601 Lind Avenue, SW., Renton, Washington 98055–4056; telephone (425) 227–2028; fax (425) 227–1181.

SUPPLEMENTARY INFORMATION: The FAA has received two reports indicating that excessive high-frequency airframe vibration occurred during flight on Boeing Model 737–200 and 737–300 series airplanes, which resulted in severe damage to the elevator, elevator tab, and elevator tab control mechanism. One report indicated that the source of the vibration was due to a detached elevator tab push rod that resulted from a missing or detached end attachment nut. The other report indicated that the initial source of vibration was a missing end bearing on an elevator tab push rod.

The FAA also has reviewed the results of inspections that were accomplished in accordance with Boeing Alert Service Bulletin 737–27A1205, dated August 28, 1997, and Boeing All-Base Telex M–7272–97–0897, dated February 13, 1997. Findings revealed that after 478 airplanes were inspected, 3 loose end attachment nuts and 7.9 per cent of all end attachment nuts inspected (a total of 2,278 nuts) did not have adequate run-on torque. These findings indicate that the occurrence of inadequate run-on and seating torque values of the end attachment nuts of the elevator tab push rods is not an isolated event.

The FAA has determined from these reports that, if an end attachment nut of an elevator tab push rod is removed and

reinstalled during routine or non-routine maintenance, the self-locking capability (run-on torque) of the nut may become degraded. If an end attachment nut having inadequate run-on torque has been installed on an airplane, the likelihood of the nut becoming loose is increased significantly. The same is true for a nut having a seating torque with less than the minimum value specified in the alert service bulletin.

Inadequate run-on and/or seating torque values of an attachment nut at either end of an elevator tab push rod, if not corrected, could result in a nut becoming detached from an end attachment bolt of a push rod, which could cause excessive high-frequency vibration during flight. Such vibration could result in structural damage to the elevator tab, elevator, and horizontal stabilizer; and result in reduced controllability of the airplane.

Explanation of Relevant Service Information

The FAA has reviewed and approved the previously referenced alert service bulletin, which describes procedures for a one-time inspection of the attachment nuts at each end of each elevator tab push rod to measure run-on torque values, and corrective actions, if necessary. Corrective actions include the replacement of any end attachment nut that is outside the run-on torque values specified in the alert service bulletin with a new nut, and ensuring that the final seating torque of the nuts is within the limits specified in the alert service bulletin.

The FAA also has reviewed and approved Boeing Service Letter 737–SL–27–118–A, dated November 14, 1997, which describes procedures for the replacement of the existing bolts and nuts at each end of the push rods with new bolts and nuts that incorporate the installation of cotter pins as a secondary locking feature. This new bolt, nut, and cotter pin design provides an additional level of safety in preventing detachment of an end attachment nut, which could result in detachment of an elevator tab push rod.

Explanation of the Requirements of the Rule

Since an unsafe condition has been identified that is likely to exist or develop on other Boeing Model 737–100, –200, –200C, –300, –400, and –500 series airplanes of the same type design, this AD is being issued to prevent detachment of the elevator tab push rod due to a detached nut at either end attachment of a push rod, which could result in excessive high-frequency airframe vibration during flight; consequent structural damage to the elevator tab, elevator, and horizontal stabilizer; and reduced controllability of the airplane. This AD requires accomplishment of actions specified in the alert service bulletin and the service letter described previously, except as discussed below.

Differences Between the Alert Service Bulletin and This AD

Operators should note that, although the effectivity listing in the Summary of the alert service bulletin specifies ''all 737 airplanes line positions 1 through 2892,'' the applicability statement of this AD specifies ''Model 737–100, –200, –200C, –300, –400, and –500 series airplanes, line numbers 1 through 2939 inclusive.'' The FAA points out that, at the time of issuance of the alert service bulletin, ''all 737 airplanes'' only included Model 737–100 through –500 series airplanes. The FAA has determined that the use of ''line numbers'' rather than ''line positions'' is the more appropriate term. The FAA also has determined that it is necessary to include the line numbers 2893 through 2939 in the applicability of this AD because those additional airplanes are subject to the same unsafe condition as the airplanes specified in the alert service bulletin.

Operators also should note that the alert service bulletin specifies replacement of any end attachment nut that is outside the run-on torque values specified in the alert service bulletin with a new nut. However, if the run-on torque value of any end attachment nut is outside the limits specified in the alert service bulletin, paragraph (a)(2) of this AD requires replacement of all existing attachment nuts at each end of each elevator tab push rod with new bolts and self-locking castellated nuts that have cotter pins installed as a secondary locking feature. The FAA has determined that such a replacement provides an additional level of safety in preventing detachment of an end attachment nut, which could result in detachment of an elevator tab push rod.

Operators also should note that the alert service bulletin recommends that the one-time inspection to measure run-on torque values of the attachment nuts at each end attachment of the elevator tab push rods be accomplished at the next scheduled elevator tab maintenance work. However, this AD requires that the inspection be accomplished within 90 days after the effective date of this AD. In developing an appropriate compliance time for this AD, the FAA considered not only the degree of urgency associated with addressing the subject unsafe condition, but the average utilization of the affected fleet and the time necessary to perform the inspection (4 hours). In light of all of these factors, the FAA finds that a 90-day compliance time for initiating the required actions is warranted, in that it represents an appropriate interval of time allowable for affected airplanes to continue to operate without compromising safety.

Interim Action

This AD is considered to be interim action until final action is identified, at which time the FAA may consider further rulemaking, which could include replacement of the existing bolts and nuts at each end of the push rods with new bolts and self-locking castellated nuts that have cotter pins installed.

Determination of Rule's Effective Date

Since a situation exists that requires the immediate adoption of this regulation, it is found that notice and opportunity for prior public comment hereon are impracticable, and that good cause exists for making this amendment effective in less than 30 days.

Comments Invited

Although this action is in the form of a final rule that involves requirements affecting flight safety and, thus, was not preceded by notice and an opportunity for public comment, comments are invited on this rule. Interested persons are invited to comment on this rule by submitting such written data, views, or arguments as they may desire. Communications shall identify the Rules Docket number and be submitted in triplicate to the address specified under the caption **ADDRESSES**. All communications received on or before the closing date for comments will be considered, and this rule may be amended in light of the comments received. Factual information that supports the commenter's ideas and suggestions is extremely helpful in evaluating the effectiveness of the AD action and determining whether additional rulemaking action would be needed.

Comments are specifically invited on the overall regulatory, economic, environmental, and energy aspects of the rule that might suggest a need to modify the rule. All comments submitted will be available, both before and after the closing date for comments, in the Rules Docket for examination by interested persons. A report that summarizes each FAA-public contact concerned with the substance of this AD will be filed in the Rules Docket.

Commenters wishing the FAA to acknowledge receipt of their comments submitted in response to this rule must submit a self-addressed, stamped postcard on which the following statement is made: ''Comments to Docket Number 99–NM–09–AD.'' The postcard will be date stamped and returned to the commenter.

Regulatory Impact

The regulations adopted herein will not have substantial direct effects on the States, on the relationship between the national government and the States, or on the distribution of power and responsibilities among the various levels of government. Therefore, in accordance with Executive Order 12612, it is determined that this final rule does not have sufficient federalism implications to warrant the preparation of a Federalism Assessment.

The FAA has determined that this regulation is an emergency regulation that must be issued immediately to correct an unsafe condition in aircraft, and that it is not a ''significant regulatory action'' under Executive Order 12866. It has been determined further that this action involves an emergency regulation under DOT Regulatory Policies and Procedures (44 FR 11034, February 26, 1979). If it is determined that this emergency regulation otherwise would be significant under DOT Regulatory Policies and Procedures, a final regulatory evaluation will be prepared and placed in the Rules Docket. A copy of it, if filed, may be obtained from the Rules Docket at the location provided under the caption **ADDRESSES**.

List of Subjects in 14 CFR Part 39

Air transportation, Aircraft, Aviation safety, Incorporation by reference, Safety.

Adoption of the Amendment

Accordingly, pursuant to the authority delegated to me by the Administrator, the Federal Aviation Administration amends part 39 of the Federal Aviation Regulations (14 CFR part 39) as follows:

PART 39—AIRWORTHINESS DIRECTIVES

1. The authority citation for part 39 continues to read as follows:

Authority: 49 U.S.C. 106(g), 40113, 44701.

§ 39.13 [Amended]

2. Section 39.13 is amended by adding the following new airworthiness directive:

99–05–15 Boeing: Amendment 39–11063. Docket 99–NM–09–AD.

Applicability: Model 737–100, –200, –200C, –300, –400, and –500 series airplanes; line numbers 1 through 2939 inclusive; certificated in any category.

Note 1: This AD applies to each airplane identified in the preceding applicability provision, regardless of whether it has been modified, altered, or repaired in the area subject to the requirements of this AD. For airplanes that have been modified, altered, or repaired so that the performance of the requirements of this AD is affected, the owner/operator must request approval for an alternative method of compliance in accordance with paragraph (b) of this AD. The request should include an assessment of the effect of the modification, alteration, or repair on the unsafe condition addressed by this AD; and, if the unsafe condition has not been eliminated, the request should include specific proposed actions to address it.

Compliance: Required as indicated, unless accomplished previously.

To prevent detachment of an elevator tab push rod due to a detached nut at either end attachment of a push rod, which could result in excessive high-frequency airframe vibration during flight; consequent structural damage to the elevator tab, elevator, and horizontal stabilizer; and reduced controllability of the airplane; accomplish the following:

(a) Within 90 days after the effective date of this AD, perform a one-time inspection of all attachment nuts at each end of each elevator tab push rod to measure the run-on torque values of the nuts, in accordance with Boeing Alert Service Bulletin 737–27A1205, dated August 28, 1997.

(1) If the run-on torque value of any end attachment nut is within the limits specified in the alert service bulletin, prior to further flight, ensure that the final seating torque of the attachment nuts is within the torque values specified in the alert service bulletin.

(2) If the run-on torque value of any end attachment nut is outside the limits specified in the alert service bulletin, prior to further flight, replace all existing bolts and attachment nuts at each end of each elevator tab push rod with new bolts and self-locking castellated nuts that have cotter pins installed as a secondary locking feature in accordance with Boeing Service Letter 737–SL–27–118–A, dated November 14, 1997, and ensure that the final seating torque of the nuts is within the torque values specified in the service letter.

Note 2: Accomplishment of the inspection and ensuring adequate final seating torque values, prior to the effective date of this AD, in accordance with Boeing All-Base Telex M–7272–97–0897, dated February 13, 1997, are considered acceptable for compliance with the actions specified in paragraphs (a) and (a)(1) of this AD for only the forward attachment nuts.

(b) An alternative method of compliance or adjustment of the compliance time that provides an acceptable level of safety may be used if approved by the Manager, Seattle Aircraft Certification Office (ACO), FAA, Transport Airplane Directorate. Operators shall submit their requests through an appropriate FAA Principal Maintenance Inspector, who may add comments and then send it to the Manager, Seattle ACO.

Note 3: Information concerning the existence of approved alternative methods of compliance with this AD, if any, may be obtained from the Seattle ACO.

(c) Special flight permits may be issued in accordance with sections 21.197 and 21.199 of the Federal Aviation Regulations (14 CFR 21.197 and 21.199) to operate the airplane to a location where the requirements of this AD can be accomplished.

(d) The actions shall be done in accordance with Boeing Alert Service Bulletin 737–27A1205, dated August 28, 1997, and Boeing Service Letter 737–SL–27–118–A, dated November 14, 1997. This incorporation by reference was approved by the Director of the **Federal Register** in accordance with 5 U.S.C. 552(a) and 1 CFR part 51. Copies may be obtained from Boeing Commercial Airplane Group, P.O. Box 3707, Seattle, Washington 98124–2207. Copies may be inspected at the FAA, Transport Airplane Directorate, 1601 Lind Avenue, SW., Renton, Washington; or at the Office of the Federal Register, 800 North Capitol Street, NW., suite 700, Washington, DC.

(e) This amendment becomes effective on March 23, 1999.

Issued in Renton, Washington, on February 26, 1999.

Darrell M. Pederson,

Acting Manager, Transport Airplane Directorate, Aircraft Certification Service.

[FR Doc. 99–5432 Filed 3–5–99; 8:45 am]

BILLING CODE 4910–13–U

DEPARTMENT OF TRANSPORTATION

Federal Aviation Administration

14 CFR Part 71

[Airspace Docket No. 98–ACE–59]

Amendment to Class E Airspace; Garden City, KS

AGENCY: Federal Aviation Administration (FAA), DOT.

ACTION: Direct final rule; Confirmation of effective date.

SUMMARY: This document confirms the effective date of a direct final rule which revises Class E airspace at Garden City, KS.

DATES: The direct final rule published at 64 FR 2562 is effective on 0901 UTC, May 20, 1999.

FOR FURTHER INFORMATION CONTACT: Kathy Randolph, Air Traffic Division, Airspace Branch, ACE–520C, Federal Aviation Administration, 601 East 12th

Street, Kansas City, MO 64106; telephone: (816) 426–3408.

SUPPLEMENTARY INFORMATION: The FAA published this direct final rule with a request for comments in the **Federal Register** on January 15, 1999 (64 FR 2562). The FAA uses the direct final rulemaking procedure for a non-controversial rule where the FAA believes that there will be no adverse public comment. This direct final rule advised the public that no adverse comments were anticipated, and that unless a written adverse comment, or a written notice of intent to submit such an adverse comment, were received within the comment period, the regulation would become effective on May 20, 1999. No adverse comments were received, and thus this notice confirms that this direct final rule will become effective on that date.

Issued in Kansas City, MO on February 16, 1999.

Herman J. Lyons, Jr.,

Manager, Air Traffic Division, Central Region.

[FR Doc. 99–5607 Filed 3–5–99; 8:45 am]

BILLING CODE 4910–13–M

DEPARTMENT OF TRANSPORTATION

Federal Aviation Administration

14 CFR Part 71

[Airspace Docket No. 98–ACE–60]

Amendment to Class E Airspace; Liberal, KS

AGENCY: Federal Aviation Administration, DOT.

ACTION: Direct final rule; confirmation of effective date.

SUMMARY: This document confirms the effective date of a direct final rule which revises Class E airspace at Liberal, KS.

DATES: The direct final rule published at 64 FR 2563 is effective on 0901 UTC, May 20, 1999.

FOR FURTHER INFORMATION CONTACT: Kathy Randolph, Air Traffic Division, Airspace Branch, ACE–520C, Federal Aviation Administration, 601 East 12th Street, Kansas City, Missouri 64106; telephone: (816) 426–3408.

SUPPLEMENTARY INFORMATION: The FAA published this direct final rule with a request for comments in the **Federal Register** on January 15, 1999 (64 FR 2563). The FAA uses the direct final rulemaking procedure for a non-controversial rule where the FAA believes that there will be no adverse public comment. This direct final rule advised the public that no adverse comments were anticipated, and that unless a written adverse comment, or a written notice of intent to submit such an adverse comment, were received within the comment period, the regulation would become effective on May 20, 1999. No adverse comments were received, and thus this notice confirms that this direct final rule will become effective on that date.

Issued in Kansas City, MO, on February 16, 1999.

Herman J. Lyons, Jr.,

Manager, Air Traffic Division, Central Region.

[FR Doc. 99–5606 Filed 3–5–99; 8:45 am]

BILLING CODE 4910–13–M

DEPARTMENT OF TRANSPORTATION

Federal Aviation Administration

14 CFR Part 71

[Airspace Docket No. 99–ACE–10]

Amendment to Class E Airspace; Lebanon, MO

AGENCY: Federal Aviation Administration (FAA), DOT.

ACTION: Direct final rule; request for comments.

SUMMARY: This action amends Class E airspace area at Floyd W. Jones Airport, Lebanon, MO. A review of the Class E airspace area for Floyd W. Jones Airport indicates it does not comply with the criteria for 700 feet Above Ground Level (AGL) airspace required for diverse departures as specified in FAA Order 7400.2D. The Class E airspace has been enlarged to conform to the criteria of FAA Order 7400.2D. The intended effect of this rule is to provide additional controlled Class E airspace for aircraft operating under Instrument Flight Rules (IFR), and comply with the criteria of FAA Order 7400.2D.

DATES: Effective date: 0901 UTC, July 15, 1999.

Comments for inclusion in the Rules Docket must be received on or before April 15, 1999.

ADDRESSES: Send comments regarding the rule in triplicate to: Manager, Airspace Branch, Air Traffic Division, ACE–520, Federal Aviation Administration, Docket Number 99–ACE–10, 601 East 12th Street, Kansas City, MO 64106.

The Official docket may be examined in the Office of the Regional Counsel for the Central Region at the same address between 9:00 a.m. and 3:00 p.m., Monday through Friday, except Federal holidays.

An informal docket may also be examined during normal business hours in the Air Traffic Division at the same address listed above.

FOR FURTHER INFORMATION CONTACT: Kathy Randolph, Air Traffic Division, Airspace Branch, ACE–520C, Federal Aviation Administration, 601 East 12th Street, Kansas City, MO 64106; telephone: (816) 426–3408.

SUPPLEMENTARY INFORMATION: This amendment to 14 CFR 71 revises the Class E airspace at Lebanon, MO. A review of the Class E airspace for Floyd W. Jones airport, MO indicates it does not meet the criteria for 700 feet AGL airspace required for diverse departures as specified in FAA Order 7400.2D. The criteria in FAA Order 7400.2D for an aircraft to reach 1200 feet AGL is based on a standard climb gradient of 200 feet per mile plus the distance from the Airport Reference Point (ARP) to the end of the outermost runway. Any fractional part of a mile is converted to the next higher tenth of a mile. The amendment at Floyd W. Jones Airport, MO, will provide additional controlled airspace for aircraft operating under IFR, and comply with the criteria of FAA Order 7400.2D. The area will be depicted on appropriate aeronautical charts. Class E airspace areas extending upward from 700 feet or more above the surface of the earth are published in paragraph 6005 of FAA Order 7400.9F, dated September 10, 1998, and effective September 16, 1998, which is incorporated by reference in 14 CFR 71.1. The Class E airspace designation listed in this document will be published subsequently in the Order.

The Direct Final Rule Procedure

The FAA anticipates that this regulation will not result in adverse or negative comment and, therefore, is issuing it as a direct final rule. Previous actions of this nature have not been controversial and have not resulted in adverse comments or objections. The amendment will enhance safety for all flight operations by designating an area where VFR pilots may anticipate the presence of IFR aircraft at lower altitudes, especially during inclement weather conditions. A greater degree of safety is achieved by depicting the area on aeronautical charts. Unless a written adverse or negative comment, or a written notice of intent to submit an adverse or negative comment is received within the comment period, the regulation will become effective on the date specified above. After the close of the comment period, the FAA will publish a document in the **Federal Register** indicating that no adverse or negative comments were received and confirming the date on which the final

rule will become effective. If the FAA does receive, within the comment period, an adverse or negative comment, or written notice of intent to submit such a comment, a document withdrawing the direct the final rule will be published in the **Federal Register,** and a notice of proposed rulemaking may be published with a new comment period.

Comments Invited

Although this action is in the form of a final rule and was not preceded by a notice of proposed rulemaking, comments are invited on this rule. Interested persons are invited to comment on this rule by submitting such written data, views, or arguments as they may desire. Communications should identify the Rules Docket number and be submitted in triplicate to the addresses specified under the caption **ADDRESSES**. All communications received on or before the closing date for comments will be considered, and this rule may be amended or withdrawn in light of the comments received. Factual information that supports the commenter's ideas and suggestions is extremely helpful in evaluating the effectiveness of this action and determining whether additional rulemaking action would be needed.

Comments are specifically invited on the overall regulatory, economic environmental, and energy-related aspects of the rule that might suggest a need to modify the rule. All comments submitted will be available, both before and after the closing date for comments, in the Rules Docket for examination by interested persons. A report that summarizes each FAA-public contact concerned with the substance of this action will be filed in the Rules Docket.

Commenters wishing the FAA to acknowledge receipt of their comments submitted in response to this rule must submit a self-addressed, stamped postcard on which the following statement is made: ''Comments to Docket No. 99–ACE–10.'' The postcard will be date stamped and returned to the commenter.

Agency Findings

The regulations adopted herein will not have substantial direct effects on the States, on the relationship between the national government and the States, or on the distribution of power and responsibilities among the various levels of government. Therefore, in accordance with Executive Order 12612, it is determined that this final rule does not have sufficient federalism implications to warrant the preparation of a Federalism Assessment.

The FAA has determined that this regulation is noncontroversial and unlikely to result in adverse or negative comments. For the reasons discussed in the preamble, I certify that this regulation (1) is not a ''significant regulatory action'' under Executive Order 12866; (2) is not a ''significant rule'' under Department of Transportation (DOT) Regulatory Policies and Procedures (44 FR 11034, February 26, 1979); and (3) if promulgated, will not have a significant economic impact, positive or negative, on a substantial number of small entities under the criteria of the Regulatory Flexibility Act.

List of Subjects in 14 CFR Part 71

Airspace, Incorporation by reference, Navigation (air).

Adoption of the Amendment

Accordingly, the Federal Aviation Administration amends 14 CFR part 71 as follows:

PART 71—DESIGNATION OF CLASS A, CLASS B, CLASS C, CLASS D, AND CLASS E AIRSPACE AREAS; AIRWAYS; ROUTES; AND REPORTING POINTS

1. The authority citation for part 71 continues to read as follows:

Authority: 49 U.S.C. 106(g), 40103, 40113, 40120; E.O. 10854, 24 FR 9565, 3 CFR, 1959–1963 Comp., p. 389.

§ 71.1 [Amended]

2. The incorporation by reference in 14 CFR 71.1 of Federal Aviation Administration Order 7400.9F, Airspace Designations and Reporting Points, dated September 10, 1998, and effective September 16, 1998, is amended as follows:

Paragraph 6005 Class E airspace areas extending upward from 700 feet or more above the surface of the earth.

* * * * *

ACE MO E5 Lebanon, MO [Revised]

Lebanon, Floyd W. Jones Airport, MO
(lat. 37°38′50″N., long. 92°39′14″W.)
Lebanon NDB, MO
(lat. 37°34′17″N., long. 92°39′30″W.)

That airspace extending upward from 700 feet above the surface within a 6.5-mile radius of Floyd W. Jones Airport and within 2.6 miles each side of the 184° bearing from the Lebanon NDB extending from the 6.5-mile radius to 9.5 miles south of the airport.

Issued in Kansas City, MO, on February 16, 1999.

Herman J. Lyons, Jr.,

Manager, Air Traffic Division, Central Region.

[FR Doc. 99–5605 Filed 3–5–99; 8:45 am]

BILLING CODE 4910–13–M

DEPARTMENT OF TRANSPORTATION

Federal Aviation Administration

14 CFR Part 71

[Airspace Docket No. 99–ACE–7]

Amendment to Class E Airspace; Stockton, MO

AGENCY: Federal Aviation Administration (FAA), DOT.

ACTION: Direct final rule; request for comments.

SUMMARY: This action amends the Class E airspace area at Stockton Municipal Airport, Stockton, MO. The FAA has developed Global Positioning System (GPS) Runway (RWY) 1, GPS RWY 19, Standard Instrument Approach Procedures (SIAPs) to serve Stockton Municipal Airport, MO. Additional controlled airspace extending upward from 700 feet Above Ground Level (AGL) is needed to accommodate these SIAPs and for Instrument Flight Rules (IFR) operations at this airport. The enlarged area will contain the new GPS RWY 1 and GPS RWY 19 SIAPs in controlled airspace.

The intended effect of this rule is to provide controlled Class E airspace for aircraft executing the GPS RWY 1 and GPS RWY 19 and to segregate aircraft using instrument approach procedures in instrument conditions from aircraft operating in visual conditions.

DATES: This direct final rule is effective on 0901 UTC, July 15, 1999.

Comments for inclusion in the Rules Docket must be received on or before April 20, 1999.

ADDRESSES: Send comments regarding the rule in triplicate to: Manager, Airspace Branch, Air Traffic Division. ACE–520, Federal Aviation Administration, Docket Number 99–ACE–7, 601 East 12th Street, Kansas City, MO 64106.

The official docket may be examined in the Office of the Regional Counsel for the Central Region at the same address between 9:00 a.m. and 3:00 p.m., Monday through Friday, except Federal holidays.

An informal docket may also be examined during normal business hours in the Air Traffic Division at the same address listed above.

FOR FURTHER INFORMATION CONTACT: Kathy Randolph, Air Traffic Division, Airspace Branch, ACE–520C, Federal Aviation Administration, 601 East 12th Street, Kansas City, MO 64106; telephone: (816) 426–3408.

SUPPLEMENTARY INFORMATION: The FAA has developed GPS RWY 1 and GPS

RWY 19 SIAPs to serve the Stockton Municipal Airport, Stockton, MO.

The amendment to Class E airspace at Stockton, MO, will provide additional controlled airspace at and above 700 feet AGL in order to contain the new SIAPs within controlled airspace, and thereby facilitate separation of aircraft operating under Instrument Flight Rules. The area will be depicted on appropriate aeronautical charts. Class E airspace areas extending upward from 700 feet or more above the surface of the earth are published in paragraph 6005 of FAA Order 7400.9F, dated September 10, 1998, and effective September 16, 1998, which is incorporated by reference in 14 CFR 71.1. The Class E airspace designation listed in this document will be published subsequently in the Order.

The Direct Final Rule Procedure

The FAA anticipates that this regulation will not result in adverse or negative comment and, therefore, is issuing it as a direct final rule. Previous actions of this nature have not been controversial and have not resulted in adverse comments or objections. The amendment will enhance safety for all flight operations by designating an area where VFR pilots may anticipate the presence of IFR aircraft at lower altitudes, especially during inclement weather conditions. A greater degree of safety is achieved by depicting the area on aeronautical charts. Unless a written adverse or negative comment, or a written notice of intent to submit an adverse or negative comment is receive within the comment period, the regulation will become effective on the date specified above. After the close of the comment period, the FAA will publish a document in the **Federal Register** indicating that no adverse or negative comments were received and confirming the date on which the final rule will become effective. If the FAA does receive, within the comment period, an adverse or negative comment, or written notice of intent to submit such a comment, a document withdrawing the direct final rule will be published in the **Federal Register**, and a notice of proposed rulemaking may be published with a new comment period.

Comments Invited

Although this action is in the form of a final rule and was not preceded by a notice of proposed rulemaking, comments are invited on this rule. Interested persons are invited to comment on this rule by submitting such written data, views, or arguments as they may desire. Communications should identify the Rules Docket number and be submitted in triplicate to the address specified under the caption **ADDRESSES**. All communications received on or before the closing date for comments will be considered, and this rule may be amended or withdrawn in light of the comments received. Factual information that supports the commenter's ideas and suggestions is extremely helpful in evaluating the effectiveness of this action and determining whether additional rulemaking action would be needed.

Comments are specifically invited on the overall regulatory, economic, environmental, and energy-related aspects of the rule that might suggest a need to modify the rule. All comments submitted will be available, both before and after the closing date for comments, in the Rules Docket for examination by interested persons. A report that summarizes each FAA-public contact concerned with the substance of this action will be filed in the Rules Docket.

Commenters wishing the FAA to acknowledge receipt of their comments submitted in response to this rule must submit a self-addressed, stamped postcard on which the following statement is made: ''Comments to Docket No. 99–ACE–7.'' The postcard will be date stamped and returned to the commenter.

Agency Findings

The regulations adopted herein will not have substantial direct effects on the States, on the relationship between the national government and the States, or on the distribution of power and responsibilities among the various levels of government. Therefore, in accordance with Executive Order 12612, it is determined that this final rule does not have sufficient federalism implications to warrant the preparation of a Federalism Assessment.

The FAA has determined that this regulations is noncontroversial and unlikely to result in adverse or negative comments. For the reasons discussed in the preamble, I certify that this regulations (1) is not a ''significant regulatory action'' under Executive Order 12866; (2) is not a ''significant rule'' under Department of Transportation (DOT) Regulatory Policies and Procedures (44 FR 11034, February 26, 1979); and (3) if promulgated, will not have a significant economic impact, positive or negative, on a substantial number of small entities under the criteria of the Regulatory Flexibility Act.

List of Subjects in 14 CFR Part 71

Airspace, Incorporation by reference, Navigation (air).

Adoption of the Amendment

Accordingly, the Federal Aviation Administration amends 14 CFR part 71 as follows:

PART 71—DESIGNATION OF CLASS A, CLASS B, CLASS C, CLASS D, AND CLASS E AIRSPACE AREAS; AIRWAYS; ROUTES; AND REPORTING POINTS

1. The authority citation for part 71 continues to read as follows:

Authority: 49 U.S.C. 106(g), 40103, 40113, 40120; E.O. 10854, 24 FR 9565, 3 CFR, 1959–1963 Comp., p. 389.

§ 71.1 [Amended]

2. The incorporation by reference in 14 CFR 71.1 of Federal Aviation Administration Order 7400.9F, Airspace Designations and Reporting Points, dated September 10, 1998, and effective September 16, 1998, is amended as follows:

Paragraph 6005 Class E airspace areas extending upward from 700 feet or more above the surface of the earth.

* * * * *

ACE MO E5 Stockton, MO [Revised]

Stockton Municipal Airport, MO
(lat. 37°39′37″N., long. 93°49′01″W.)
That airspace extending upward from 700 feet above the surface within a 6.3-mile radius of Stockton Municipal Airport.

* * * * *

Issued in Kansas City, MO, on February 17, 1999.

Herman, J. Lyons, Jr.,

Manager, Air Traffic Division, Central Region.

[FR Doc. 99–5604 Filed 3–5–99; 8:45 am]

BILLING CODE 4910–13–M

DEPARTMENT OF TRANSPORTATION

Federal Aviation Administration

14 CFR Part 71

[Airspace Docket No. 99–ACE–11]

Amendment to Class E Airspace; Neosho, MO

AGENCY: Federal Aviation Administration (FAA), DOT.

ACTION: Direct final rule; request for comments.

SUMMARY: This action amends Class E airspace area at Hugh Robinson Airport, Neosho, MO. A review of the Class E airspace area for Hugh Robinson Airport indicates it does not comply with the criteria for 700 feet Above Ground Level (AGL) airspace required for diverse departures as specified in FAA Order 7400.2D. The Class E airspace has been

enlarged to confirm to the criteria of FAA Order 7400.2D.

In addition, the name of Neosho Municipal Airport has been changed to Neosho, Hugh Robinson Airport.

The intended effect of this rule is to provide additional controlled Class E airspace for aircraft operating under Instrument Flight Rules (IFR), change the airport name, and comply with the criteria of FAA Order 7400.2D.

DATES: Effective date: 0901 UTC, July 15, 1999.

Comments for inclusion in the Rules Docket must be received on or before April 15, 1999.

ADDRESSES: Send comments regarding the rule in triplicate to: Manager, Airspace Branch, Air Traffic Division, ACE–520, Federal Aviation Administration, Docket Number 99–ACE–11, 601 East 12th Street, Kansas City, MO 64106.

The official docket may be examined in the Office of the Regional Counsel for the Central Region at the same address between 9:00 a.m. and 3:00 p.m., Monday through Friday, except Federal holidays.

An informal docket may also be examined during normal business hours in the Air Traffic Division at the same address listed above.

FOR FURTHER INFORMATION CONTACT: Kathy Randolph, Air Traffic Division, Airspace Branch, ACE–520C, Federal Aviation Administration, 601 East 12th Street, Kansas City, MO 64106; telephone: (816) 426–3408.

SUPPLEMENTARY INFORMATION: This amendment to 14 CFR 71 revises the Class E airspace at Neosho, MO. A review of the Class E airspace for Hugh Robinson Airport, MO, indicates it does not meet the criteria for 700 feet AGL airspace required for diverse departures as specified in FAA Order 7400.2D. The criteria in FAA Order 7400.2D for an aircraft to reach 1200 feet AGL is based on a standard climb gradient of 200 feet per mile plus the distance from the ARP to the end of the outermost runway. Any fractional part of a mile is converted to the next higher tenth of a mile. The amendment at Neosho, Hugh Robinson Airport, MO, will provide additional controlled airspace for aircraft operating under IFR, change the airport name, and comply with the criteria of FAA Order 7400.2D. The area will be depicted on appropriate aeronautical charts. Class E airspace areas extending upward from 700 feet or more above the surface of the earth are published in paragraph 6005 of FAA Order 7400.9F, dated September 10, 1998, and effective September 16, 1998, which is incorporated by reference in 14 CFR 71.1. The Class E airspace designation listed in this document will be published subsequently in the Order.

The Direct Final Rule Procedure

The FAA anticipates that this regulation will not result in adverse or negative comment and, therefore, is issuing it as a direct final rule. Previous actions of this nature have not been controversial and have not resulted in adverse comments or objections. The amendment will enhance safety for all flight operations by designating an area where VFR pilots may anticipate the presence of IFR aircraft at lower altitudes, especially during inclement weather conditions. A greater degree of safety is achieved by depicting the area on aeronautical charts. Unless a written adverse or negative comment, or a written notice of intent to submit an adverse or negative comment is received within the comment period, the regulation will become effective on the date specified above. After the close of the comment period, the FAA will publish a document in the **Federal Register** indicating that no adverse or negative comments were received and confirming the date on which the final rule will become effective. If the FAA does receive, within the comment period, an adverse or negative comment, or written notice of intent to submit such a comment, a document withdrawing the direct final rule will be published in the **Federal Register**, and a notice of proposed rulemaking may be published with a new comment period.

Comments Invited

Although this action is in the form of a final rule and was not preceded by a notice of proposed rulemaking, comments are invited on this rule. Interested persons are invited to comment on this rule by submitting such written data, views, or arguments as they may desire. Communications should identify the Rules Docket number and are submitted in triplicate to the address specified under the caption **ADDRESSES**. All communications received on or before the closing date for comments will be considered, and this rule may be amended or withdrawn in light of the comments received. Factual information that supports the commenter's ideas and suggestions is extremely helpful in evaluating the effectiveness of this action and determining whether additional rulemaking action would be needed.

Comments are specifically invited on the overall regulatory, economic, environmental, and energy-related aspects of the rule that might suggest a need to modify the rule. All comments submitted will be available, both before and after the closing date for comments, in the Rules Docket for examination by interested persons. A report that summarizes each FAA-public contact concerned with the substance of this action will be filed in the Rules Docket.

Commenters wishing the FAA to acknowledge receipt of their comments submitted in response to this rule must submit a self-addressed, stamped postcard on which the following statement is made: ''Comments to Docket No. 99–ACE–11.'' The postcard will be date stamped and returned to the commenter.

Agency Findings

The regulations adopted herein will not have substantial direct on the States, on the relationship between the national government and the States, or on the distribution of power and responsibilities among the various levels of government. Therefore, in accordance with Executive Order 12612, it is determined that this final rule does not have sufficient federalism implications to warrant the preparation of a Federalism Assessment.

The FAA has determined that this regulation is noncontroversial and unlikely to result in adverse of negative comments. For the reasons discussed in the preamble, I certify that this regulation (1) is not a ''significant regulatory action'' under Executive Order 12866; (2) is not a ''significant rule'' under Department of Transportation (DOT) Regulatory Policies and Procedures (44 FR 11034, February 26, 1979); and (3) if promulgated, will not have a significant economic impact, positive or negative, on a substantial number of small entities under the criteria of the Regulatory Flexibility Act.

List of Subjects in 14 CFR Part 71

Airspace, Incorporation by reference, Navigation (air).

Adoption of the Amendment

Accordingly, the Federal Aviation Administration amends 14 CFR part 71 as follows:

PART 71—DESIGNATION OF CLASS A, CLASS B, CLASS C, CLASS D, AND CLASS E AIRSPACE AREAS; AIRWAYS; ROUTES; AND REPORTING POINTS

1. The authority citation for part 71 continues to read as follows:

Authority: 49 U.S.C. 106(g), 40103, 40113, 40120; E.O. 10854, 24 FR 9565, 3 CFR, 1959–1963 Comp., p. 389.

§ 71.1 [Amended]

2. The incorporation by reference in 14 CFR 71.1 of Federal Aviation Administration Order 7400.9F, Airspace Designations and Reporting Points, dated September 10, 1998, and effective September 16, 1998, is amended as follows:

Paragraph 6005 Class E airspace areas extending upward from 700 feet or more above the surface of the earth.

* * * * *

ACE MO E5 Neosho, MO [Revised]

Neosho, Hugh Robinson Airport, MO
(lat. 36°48′39″N., long. 94°23′30″W.)
Neosho VORTAC
(lat. 36°50′33″N., long. 94°26′08″W.)

That airspace extending upward from 700 feet above the surface within a 6.5-mile radius of Neosho, Hugh Robinson Airport and within 1.8 miles each side of the Neosho VORTAC 310° radial extending from the 6.5-mile radius to 7 miles northwest of the airport.

Issued in Kansas City, MO, on February 16, 1999.

Herman J. Lyons, Jr.,

Manager, Air Traffic Division, Central Region.

[FR Doc. 99–5603 Filed 3–5–99; 8:45 am]

BILLING CODE 4910–13–M

DEPARTMENT OF HEALTH AND HUMAN SERVICES

Food and Drug Administration

21 CFR Parts 50 and 812

[Docket No. 96N–0158]

RIN 0910–AA60

Protection of Human Subjects; Informed Consent; Technical Amendment

AGENCY: Food and Drug Administration, HHS.

ACTION: Final rule; technical amendment.

SUMMARY: The Food and Drug Administration (FDA) is amending a final rule that appeared in the **Federal Register** of October 2, 1996 (61 FR 51498) on informed consent. The document was published with some inadvertent errors in the codified section. This document corrects those errors to ensure the accuracy and consistency of the agency's regulations.

EFFECTIVE DATE: March 8, 1999.

FOR FURTHER INFORMATION CONTACT: Bonnie M. Lee, Office of the Executive Secretariat (HF–40), Food and Drug Administration, 5600 Fishers Lane, Rockville, MD 20852, 301–827–4450.

SUPPLEMENTARY INFORMATION: In the **Federal Register** of Wednesday, October 2, 1996 (61 FR 51498), an amendment for § 50.20 (21 CFR 50.20) was inadvertently omitted. Section 50.20 now provides for two exceptions to obtaining informed consent; one exception is contained in § 50.23 (21 CFR 50.23) and the other is contained § 50.24 (21 CFR 50.24). Accordingly this document conforms § 50.20 to the final regulations. Additionally, an amendment for § 812.47(b) (21 CFR 812.47(b)) inadvertently omitted commas which could cause confusion in understanding the meaning of the last sentence in that paragraph. Accordingly, FDA is amending the last sentence in § 812.47(b) to include two commas so that it will state ''The sponsor promptly shall provide this information in writing to FDA, investigators who are asked to participate in this or a substantially equivalent clinical investigation, and other IRB's that are asked to review this or a substantially equivalent investigation.'' Also, the final rule on informed consent amended the Investigational New Drug Application (IND) regulations and the Investigational Device Exemption (IDE) regulations. In the **Federal Register** of June 16, 1997, FDA amended its IND regulations to clarify that, within 30 days after receipt of an IND for any clinical investigation involving an exception from informed consent, FDA will provide a written determination as to whether the investigation may begin. The agency inadvertently omitted a conforming amendment for the IDE regulations in § 812.20 (21 CFR 812.20). Current IDE regulations at § 812.20(a)(4)(i) require sponsors to submit a separate IDE for any clinical investigation involving an exception from informed consent under § 50.24. This requirement is to ensure that FDA has an opportunity to review the protocol and supporting information before the investigation begins. Section 812.20(a)(4)(i) also provides that the clinical investigation may not proceed without prior written authorization from FDA. The statement in § 812.20(a)(4)(i) that ''FDA shall provide such written authorization 30 days after FDA receives the IDE or earlier'' might be misread as suggesting that the agency may only grant permission for investigations to begin. To clarify the agency's intent, FDA is amending the last sentence in § 812.20(a)(4)(i) to state that ''FDA shall provide a written determination 30 days after FDA receives the IDE or earlier.''

List of Subjects

21 CFR Part 50

Human research subjects, Prisoners, Reporting and recordkeeping requirements, Safety.

21 CFR Part 812

Health records, Medical devices, Medical research, Reporting and recordkeeping requirements.

Therefore, under the Federal Food, Drug, and Cosmetic Act and under authority delegated to the Commissioner of Food and Drugs, 21 CFR parts 50 and 812 are amended as follows:

PART 50—PROTECTION OF HUMAN SUBJECTS

1. The authority citation for 21 CFR part 50 is revised to read as follows:

Authority: 21 U.S.C. 321, 346, 346a, 348, 352, 353, 355, 360, 360c–360f, 360h–360j, 371, 379e, 381; 42 U.S.C. 216, 241, 262, 263b–263n.

2. Section 50.20 is amended by revising the first sentence to read as follows:

§ 50.20 General requirements for informed consent.

Except as provided in §§ 50.23 and 50.24, no investigator may involve a human being as a subject in research covered by these regulations unless the investigator has obtained the legally effective informed consent of the subject or the subject's legally authorized representative. * * *

PART 812—INVESTIGATIONAL DEVICE EXEMPTIONS

3. The authority citation for 21 CFR part 812 is revised to read as follows:

Authority: 21 U.S.C. 331, 351, 352, 353, 355, 360, 360c–360f, 360h–360j, 371, 372, 374, 379e, 381, 382, 383; 42 U.S.C. 216, 241, 262, 263b–263n.

4. Section 812.20 is amended by revising the last sentence of paragraph (a)(4)(i) to read as follows:

§ 812.20 Application.

(a) * * *

(4)(i) * * * FDA shall provide a written determination 30 days after FDA receives the IDE or earlier.

* * * * *

5. Section 812.47 is amended by revising the last sentence of paragraph (b) to read as follows:

§ 812.47 Emergency research under § 50.24 of this chapter.

* * * * *

(b) * * * The sponsor promptly shall provide this information in writing to FDA, investigators who are asked to participate in this or a substantially equivalent clinical investigation, and other IRB's that are asked to review this or a substantially equivalent investigation.

Dated: March 1, 1999.

William K. Hubbard,

Acting Deputy Commissioner for Policy.

[FR Doc. 99–5522 Filed 3–5–99; 8:45 am]

BILLING CODE 4160–01–F

DEPARTMENT OF HEALTH AND HUMAN SERVICES

Food and Drug Administration

21 CFR Part 177

[Docket No. 97F–0412]

Indirect Food Additives: Polymers

AGENCY: Food and Drug Administration, HHS.

ACTION: Final rule.

SUMMARY: The Food and Drug Administration (FDA) is amending the food additive regulations to provide for the safe use of ethylene/propylene copolymers that contain up to 20 mole-percent of polymer units derived from propylene, with the remainder of the polymer consisting of ethylene, and having a minimum viscosity-average molecular weight of 95,000 and a minimum Mooney viscosity of 13, at up to 30 percent in blends with regulated polyolefins intended for contact with foods. This action responds to a petition filed by Mitsui Petrochemical Industries, Ltd.

DATES: The regulation is effective March 8, 1999; written objections and requests for a hearing by April 7, 1999.

ADDRESSES: Submit written objections to the Dockets Management Branch (HFA–305), Food and Drug Administration, 5630 Fishers Lane, rm. 1061, Rockville, MD 20852.

FOR FURTHER INFORMATION CONTACT: Hortense S. Macon, Center for Food Safety and Applied Nutrition (HFS–216), Food and Drug Administration, 200 C St. SW., Washington, DC 20204, 202–418–3086.

SUPPLEMENTARY INFORMATION: In a notice published in the **Federal Register** of October 6, 1997 (62 FR 52136), FDA announced that a food additive petition (FAP 7B4549) had been filed by Mitsui Petrochemical Industries, Ltd., c/o Keller and Heckman LLP, 1001 G St. NW., suite 500 West, Washington, DC 20001. The petition proposed to amend the food additive regulations in § 177.1520 *Olefin polymers* (21 CFR 177.1520) to provide for the safe use of ethylene/propylene copolymers that contain up to 20 mole-percent of polymer units derived from propylene, with the remainder of the polymer consisting of ethylene, and having a minimum viscosity-average molecular weight of 95,000 and a minimum Mooney viscosity of 13, at up to 30 percent of other regulated polymer blends intended for contact with food.

FDA has evaluated data in the petition and other relevant material. Based on this information, the agency concludes that: (1) The proposed use of the additive is safe, (2) the additive will achieve its intended technical effect, and therefore, (3) the regulations in § 177.1520 should be amended as set forth below.

In accordance with § 171.1(h) (21 CFR 171.1(h)), the petition and the documents that FDA considered and relied upon in reaching its decision to approve the petition are available for inspection at the Center for Food Safety and Applied Nutrition by appointment with the information contact person listed above. As provided in § 171.1(h), the agency will delete from the documents any materials that are not available for public disclosure before making the documents available for inspection.

The agency has carefully considered the potential environmental effects of this action. FDA has concluded that the action will not have a significant impact on the human environment, and that an environmental impact statement is not required. The agency's finding of no significant impact and the evidence supporting that finding, contained in an environmental assessment, may be seen in the Dockets Management Branch (address above) between 9 a.m. and 4 p.m., Monday through Friday.

This final rule contains no collections of information. Therefore, clearance by the Office of Management and Budget under the Paperwork Reduction Act of 1995 is not required.

Any person who will be adversely affected by this regulation may at any time on or before April 7, 1999, file with the Dockets Management Branch (address above) written objections thereto. Each objection shall be separately numbered, and each numbered objection shall specify with particularity the provisions of the regulation to which objection is made and the grounds for the objection. Each numbered objection on which a hearing is requested shall specifically so state. Failure to request a hearing for any particular objection shall constitute a waiver of the right to a hearing on that objection. Each numbered objection for which a hearing is requested shall include a detailed description and analysis of the specific factual information intended to be presented in support of the objection in the event that a hearing is held. Failure to include such a description and analysis for any particular objection shall constitute a waiver of the right to a hearing on the objection. Three copies of all documents shall be submitted and shall be identified with the docket number found in brackets in the heading of this document. Any objections received in response to the regulation may be seen in the Dockets Management Branch between 9 a.m. and 4 p.m., Monday through Friday.

List of Subjects in 21 CFR Part 177

Food additives, Food packaging.

Therefore, under the Federal Food, Drug, and Cosmetic Act and under authority delegated to the Commissioner of Food and Drugs and redelegated to the Director, Center for Food Safety and Applied Nutrition, 21 CFR part 177 is amended as follows:

PART 177—INDIRECT FOOD ADDITIVES: POLYMERS

1. The authority citation for 21 CFR part 177 continues to read as follows:

Authority: 21 U.S.C. 321, 342, 348, 379e.

2. Section 177.1520 is amended in the table in paragraph (c) by adding an item 3.7 to read as follows:

§ 177.1520 Olefin polymers.

* * * * *

(c)* * *

Olefin polymers	Density	Melting Point (MP) or softening point (SP) (*Degrees Centigrade*)	Maximum extractable fraction (expressed as percent by weight of the polymer) in *N*-hexane at specified temperatures	Maximum soluble fraction (expressed as percent by weight of polymer) in xylene at specified temperatures
*	*	*	*	*
3.7 Ethylene/propylene copolymers, meeting the identity described in paragraph (a)(3)(i) of this section, containing not less than 80 mole-percent of polymer units derived from ethylene and having a minimum viscosity average molecular weight of 95,000 as determined by the method described in paragraph (d)(5) of this section, and a minimum Mooney viscosity of 13 as determined by the method described in paragraph (d)(6) of this section. Ethylene/propylene copolymers described in this item 3.7 are to be used only in blends with other olefin polymers complying with this section, at levels not to exceed 30 percent by weight of the total polymer blend, and in contact with food only of types identified in § 176.170(c) of this chapter, Table 1, under Types I, II, III, IV–B, VI, VII, VIII, and IX. Additionally, optional adjuvants permitted for use in olefin copolymers complying with item 3.4 of this table may be used in the production of this copolymer.	Not less than 0.86			
*	*	*	*	*

* * * * *

Dated: February 23, 1999.

Janice F. Oliver,

Deputy Director for Systems and Support, Center for Food Safety and Applied Nutrition.

[FR Doc. 99–5520 Filed 3–5–99; 8:45 am]

BILLING CODE 4160–01–F

DEPARTMENT OF HEALTH AND HUMAN SERVICES

Food and Drug Administration

21 CFR Part 216

[Docket No. 98N–0655]

List of Drug Products That Have Been Withdrawn or Removed From the Market for Reasons of Safety or Effectiveness

AGENCY: Food and Drug Administration, HHS.

ACTION: Final rule.

SUMMARY: The Food and Drug Administration (FDA) is amending its regulations to include a list of drug products that may not be used for pharmacy compounding under the exemptions under section 503A of the Federal Food, Drug, and Cosmetic Act (the act) because they have had their approval withdrawn or were removed from the market because the drug product or its components have been found to be unsafe or not effective. The list has been compiled under the new statutory requirements of the Food and Drug Administration Modernization Act of 1997 (Modernization Act).

DATES: This rule is effective on April 7, 1999.

FOR FURTHER INFORMATION CONTACT: Wayne H. Mitchell, Center for Drug Evaluation and Research (HFD–7), Food and Drug Administration, 5600 Fishers

Lane, Rockville, MD 20857, 301–594–2041.

SUPPLEMENTARY INFORMATION:

I. Background

Section 127 of the Modernization Act (Pub. L. 105–115), which added section 503A to the act (21 U.S.C. 353a), describes the circumstances under which compounded drugs qualify for exemptions from certain adulteration, misbranding, and new drug provisions of the act (i.e., 501(a)(2)(B), 502(f)(1), and 505 of the act (21 U.S.C. 351(a)(2)(B), 352(f)(1), and 355)).

Section 503A of the act contains several conditions that must be satisfied for pharmacy compounding to qualify for the exemptions. Section 503A(b)(1)(C) of the act provides that the licensed pharmacist or licensed physician does not ''compound a drug product that appears on a list published by the Secretary in the **Federal Register** of drug products that have been withdrawn or removed from the market because such drug products or components of such drug products have been found to be unsafe or not effective.'' Section 503A(d)(1) of the act requires that the list of drug products that have been withdrawn or removed from the market because they were unsafe or not effective be issued as a regulation and that an advisory committee be consulted in the rulemaking process.

In the **Federal Register** of October 8, 1998 (63 FR 54082), FDA proposed a rule to establish the list of drug products that have been withdrawn or removed from the market because they were unsafe or not effective. The primary focus of that initial proposed rule and this final rule is on drug products that have been withdrawn or removed from the market because they were found to be unsafe. FDA may initiate rulemaking to add other drug products to the list that have been withdrawn or removed from the market because they were found to be not effective or to update the list as new information becomes available to the agency regarding products that were removed from the market because they were unsafe. The proposed rule was presented to the Pharmacy Compounding Advisory Committee at a meeting held on October 14 and 15, 1998 (see the **Federal Register** of September 4, 1998 (63 FR 47301)). The committee did not have any adverse comments on the proposed rule and did not suggest any changes.

II. Comments on the Proposed Rule

FDA received comments from consumers, pharmacists, a medical doctor, a pharmaceutical manufacturer, a pharmaceutical manufacturers' organization, and a committee representing the plaintiffs in a drug product liability class action suit.

1. Two comments questioned FDA's shortening the comment period from 75 to 45 days.

As FDA stated in the preamble to the proposed rule (63 FR 54082 at 54087 to 54088), the agency believes that a shorter comment period was warranted to expedite this rulemaking proceeding because the compounding of many of the drug products on the list would present a serious threat to the public health. Many of the drug products have caused death or life-threatening conditions. Some of the drugs on the list are believed to cause cancer, while others were shown to be toxic to the liver and other organs.

2. One comment objected to the wording of the first sentence of proposed § 216.24, which says ''The following drug products were withdrawn or removed from the market because such drug products or components of such drug products were found to be unsafe or not effective.'' The comment expressed concerns that the finding that a drug was withdrawn from the market by the manufacturer because it was not safe or effective might be used in a product liability lawsuit against the manufacturer who voluntarily withdrew the drug product from the market. The comment also expressed concerns that fear of having the finding used against them might discourage manufacturers from voluntarily withdrawing drug products when concerns about the drug product's safety and effectiveness have developed.

The agency does not believe it is necessary to change the wording of § 216.24 in response to this comment. Compounding pharmacists and physicians are the intended audience for this rule. The purpose of § 216.24 is to provide these compounders a list of drugs that they may not compound under section 503A of the act. This list is not intended to be used as evidence in a product liability suit, and the addition of language designed to minimize the potential effect of the list in litigation is unnecessary to fulfill its intended purpose.

For the purposes of this rule, FDA has determined that it is not necessary to deviate from the statutory language found in section 503A(b)(1)(C) of the act, which prohibits compounders from compounding ''a drug product that appears on a list published by [FDA] in the **Federal Register** of drug products that have been withdrawn or removed from the market because such drug products or components of such drug products have been found to be unsafe or ineffective.''

The agency wishes to emphasize that the inclusion of a drug product on the list does not mean that the drug product was marketed negligently, was defective, or was marketed in breach of any warranty. Even after exhaustive clinical studies, safety problems may not become apparent until a drug product has been in commercial distribution for a significant amount of time, so the fact that a drug was removed or withdrawn from the market does not mean that the drug was improperly placed in commercial distribution.

3. A large number of comments objected to drug products containing adrenal cortex being placed on the list. One of the comments included a photocopy of an article from the November issue of the magazine *Nutrition & Healing.* This article apparently is the source of much of the content of many of the comments. None of the comments provided any information about the removal of adrenal cortex extract from the market, other than the unsupported statements that the removal of adrenal cortex extract was economically motivated. These comments included unsupported statements that adrenal cortex extract has never been associated with a death or serious adverse event (except for a series of adverse events in 1996 and 1997 associated with contaminated adrenal cortex extract) and that adrenal cortex extract is safer and more effective than the synthetic adrenocortical steroids that have replaced it in medical use. The comments also asserted, without presenting any scientific data or historical information to support the assertion, that FDA acted improperly in directing the removal of drugs containing adrenal cortex from the market because the low levels of corticosteroids found in the drugs presented a substantial risk of undertreatment of serious conditions.

FDA's concerns about the safety of adrenal cortex extract have grown stronger since the drug product was removed from the market in 1978. Adrenal cortex extract is derived from the cortex adrenal glands of domestic food animals, including cattle. In 1986 the disease bovine spongiform encephalopathy (BSE) was identified in cattle. BSE has been found to be epidemic in Great Britain and present in Western Europe and Oman. Hundreds of thousands of cattle have either died or been destroyed as a result of BSE infection. Since that time strong evidence has been developed associating ingestion of tissues from

BSE-infected cattle with the development of new variant Creutzfeldt–Jakob disease (nvCJD) in humans. A patient taking a drug derived from the adrenal cortex of a BSE-infected cow would be running an unacceptable risk of contracting nvCJD. Due to the destruction of BSE-infected cattle and other controls (see the **Federal Register** of August 29, 1994 (59 FR 44591)), the chances of a patient getting nvCJD from adrenal cortex extract are low. However, there is still a risk involved in taking adrenal cortex extract, and that risk must be taken very seriously in light of the fact that nvCJD appears to always be fatal.

Concerning the comments that FDA acted improperly in removing drugs containing adrenal cortex from the market because of a substantial risk of undertreatment of serious conditions, FDA's action was investigated by the General Accounting Office and found to be proper (see ''By the Comptroller General, Report to the Honorable Barry M. Goldwater, Jr., House of Representatives of the United States: Adrenal Cortical Extract Taken Off Drug Market'' (HRD–81–61, 1981)).

For the reasons stated previously, FDA is keeping drug products containing adrenal cortex on the list of drugs that may not be compounded under section 503A of the act.

4. One comment strongly supported the inclusion of drug products containing dexfenfluramine hydrochloride and fenfluramine hydrochloride on the list.

5. One comment pointed out that there is a hearing request pending before the agency regarding the withdrawal of approval of the applications for neomycin sulfate in sterile vials for injection (see the **Federal Register** of December 6, 1988 (53 FR 49232)) and another pending request for a hearing regarding the withdrawal of approval of the applications for neomycin sulfate for prescription compounding (see the **Federal Register** of December 6, 1988 (53 FR 49231)). A petition for stay of action regarding the two actions mentioned above and regarding a labeling guideline for neomycin sulfate for prescription compounding (see the **Federal Register** of April 15, 1988 (53 FR 12662)) is also pending before the agency.

Because of the complex administrative record on neomycin sulfate currently before the agency and because of the public health need to expedite implementation of this rule, FDA is postponing final action on listing all parenteral drug products containing neomycin sulfate. Parenteral drug products containing neomycin sulfate may be added to the list at a later date.

III. Environmental Impact

The agency has determined under 21 CFR 25.30(h) that this action is of a type that does not individually or cumulatively have a significant effect on the human environment. Therefore, neither an environmental assessment nor an environmental impact statement is required.

IV. Analysis of Impacts

FDA has examined the impacts of the final rule under Executive Order 12866, the Regulatory Flexibility Act (5 U.S.C. 601–612), and the Unfunded Mandates Reform Act of 1995 (Pub. L. 104–4). Executive Order 12866 directs agencies to assess all costs and benefits of available regulatory alternatives and, when regulation is necessary, to select regulatory approaches that maximize net benefits (including potential economic, environmental, public health and safety, and other advantages; distributive impacts; and equity). Executive Order 12866 classifies a rule as significant if it meets any one of a number of specified conditions, including having an annual effect on the economy of $100 million or adversely affecting in a material way a sector of the economy, competition, or jobs, or if it raises novel legal or policy issues. As discussed in the paragraphs below, the agency believes that this rule is consistent with the regulatory philosophy and principles identified in the Executive Order. In addition, the final rule is not a significant regulatory action as defined by the Executive Order and so is not subject to review under the Executive Order.

The agency has not estimated any compliance costs or loss of sales due to this final rule because it prohibits pharmacy compounding of only those drug products that have already been withdrawn or removed from the market. The agency is not aware of any routine use of these drug products in pharmacy compounding and received no significant data in response to the request in the preamble to the proposed rule for the submission of comments on this issue and current compounding usage data for these drug products. Additionally, FDA did not receive any comments on compliance costs and loss of sales due to this rule or current compounding usage data for the drug products listed in this rule at the Pharmacy Compounding Advisory Committee meeting held on October 14 and 15, 1998.

Unless an agency certifies that a rule will not have a significant economic impact on a substantial number of small entities, the Regulatory Flexibility Act requires agencies to analyze regulatory options to minimize any significant economic impact of a regulation on small entities. The agency is taking this action in order to comply with section 503A of the act. This provision specifically directs the FDA to develop a list of drug products that have been withdrawn or removed from the market because such products or components have been found to be unsafe or not effective. Any drug product on this list will not qualify for the pharmacy compounding exemptions under section 503A of the act. The drug products on this list were manufactured by many different pharmaceutical firms, some of which may have qualified under the Small Business Administration (SBA) regulations (those with less than 750 employees) as small businesses. However, since the list only includes those drug products that have already been withdrawn or removed from the market for safety or efficacy concerns, this final rule will not negatively impact these small businesses. Moreover, no compliance costs are estimated for any of these small pharmaceutical firms because they are not the subject of this rule and are not expected to realize any loss of sales due to this rule. Further, the SBA guidelines limit the definition of small drug stores or pharmacies to those that have less than $5.0 million in sales. Again, the pharmacies that qualify as small businesses are not expected to incur any compliance costs or loss of sales due to this regulation because the products have already been withdrawn or removed from the market, and the agency believes that these drugs would be compounded only very rarely, if ever. Therefore, FDA certifies that this rule will not have a significant economic impact on a substantial number of small entities.

Section 202 of the Unfunded Mandates Reform Act requires that agencies prepare an assessment of anticipated costs and benefits before it finalizes any rule requiring any expenditure by State, local, and tribal governments, in the aggregate, or by the private sector of $100 million (adjusted annually for inflation) in any 1 year. The publication of the list of products withdrawn or removed from the market because they were found to be unsafe or ineffective will not result in expenditures of funds by State, local, and tribal governments or the private sector in excess of $100 million annually. Because the agency does not estimate any annual expenditures due to the final rule, FDA is not required to

perform a cost/benefit analysis according to the Unfunded Mandates Reform Act.

V. Paperwork Reduction Act of 1995

This final rule contains no collection of information. Therefore, clearance by the Office of Management and Budget under the Paperwork Reduction Act of 1995 is not required.

List of Subjects in 21 CFR Part 216

Drugs, Pharmacy compounding, Prescription drugs.

Therefore, under the Federal Food, Drug, and Cosmetic Act and under authority delegated to the Commissioner of Food and Drugs, 21 CFR part 216 is added to read as follows:

PART 216—PHARMACY COMPOUNDING

Subpart A—General Provisions [Reserved]

Subpart B—Compounded Drug Products

Sec.
216.23 [Reserved]
216.24 Drug products withdrawn or removed from the market for reasons of safety or effectiveness.

Authority: 21 U.S.C. 351, 352, 353a, 355, and 371.

Subpart A—General Provisions [Reserved]

Subpart B—Compounded Drug Products

§ 216.23 [Reserved]

§ 216.24 Drug products withdrawn or removed from the market for reasons of safety or effectiveness.

The following drug products were withdrawn or removed from the market because such drug products or components of such drug products were found to be unsafe or not effective. The following drug products may not be compounded under the exemptions provided by section 503A(a) of the Federal Food, Drug, and Cosmetic Act:

Adenosine phosphate: All drug products containing adenosine phosphate.

Adrenal cortex: All drug products containing adrenal cortex.

Azaribine: All drug products containing azaribine.

Benoxaprofen: All drug products containing benoxaprofen.

Bithionol: All drug products containing bithionol.

Bromfenac sodium: All drug products containing bromfenac sodium.

Butamben: All parenteral drug products containing butamben.

Camphorated oil: All drug products containing camphorated oil.

Carbetapentane citrate: All oral gel drug products containing carbetapentane citrate.

Casein, iodinated: All drug products containing iodinated casein.

Chlorhexidine gluconate: All tinctures of chlorhexidine gluconate formulated for use as a patient preoperative skin preparation.

Chlormadinone acetate: All drug products containing chlormadinone acetate.

Chloroform: All drug products containing chloroform.

Cobalt: All drug products containing cobalt salts (except radioactive forms of cobalt and its salts and cobalamin and its derivatives).

Dexfenfluramine hydrochloride: All drug products containing dexfenfluramine hydrochloride.

Diamthazole dihydrochloride: All drug products containing diamthazole dihydrochloride.

Dibromsalan: All drug products containing dibromsalan.

Diethylstilbestrol: All oral and parenteral drug products containing 25 milligrams or more of diethylstilbestrol per unit dose.

Dihydrostreptomycin sulfate: All drug products containing dihydrostreptomycin sulfate.

Dipyrone: All drug products containing dipyrone.

Encainide hydrochloride: All drug products containing encainide hydrochloride.

Fenfluramine hydrochloride: All drug products containing fenfluramine hydrochloride.

Flosequinan: All drug products containing flosequinan.

Gelatin: All intravenous drug products containing gelatin.

Glycerol, iodinated: All drug products containing iodinated glycerol.

Gonadotropin, chorionic: All drug products containing chorionic gonadotropins of animal origin.

Mepazine: All drug products containing mepazine hydrochloride or mepazine acetate.

Metabromsalan: All drug products containing metabromsalan.

Methamphetamine hydrochloride: All parenteral drug products containing methamphetamine hydrochloride.

Methapyrilene: All drug products containing methapyrilene.

Methopholine: All drug products containing methopholine.

Mibefradil dihydrochloride: All drug products containing mibefradil dihydrochloride.

Nitrofurazone: All drug products containing nitrofurazone (except topical drug products formulated for dermatalogic application).

Nomifensine maleate: All drug products containing nomifensine maleate.

Oxyphenisatin: All drug products containing oxyphenisatin.

Oxyphenisatin acetate: All drug products containing oxyphenisatin acetate.

Phenacetin: All drug products containing phenacetin.

Phenformin hydrochloride: All drug products containing phenformin hydrochloride.

Pipamazine: All drug products containing pipamazine.

Potassium arsenite: All drug products containing potassium arsenite.

Potassium chloride: All solid oral dosage form drug products containing potassium chloride that supply 100 milligrams or more of potassium per dosage unit (except for controlled-release dosage forms and those products formulated for preparation of solution prior to ingestion).

Povidone: All intravenous drug products containing povidone.

Reserpine: All oral dosage form drug products containing more than 1 milligram of reserpine.

Sparteine sulfate: All drug products containing sparteine sulfate.

Sulfadimethoxine: All drug products containing sulfadimethoxine.

Sulfathiazole: All drug products containing sulfathiazole (except those formulated for vaginal use).

Suprofen: All drug products containing suprofen (except ophthalmic solutions).

Sweet spirits of nitre: All drug products containing sweet spirits of nitre.

Temafloxacin hydrochloride: All drug products containing temafloxacin.

Terfenadine: All drug products containing terfenadine.

3,3′,4′,5-tetrachlorosalicylanilide: All drug products containing 3,3′,4′,5-tetrachlorosalicylanilide.

Tetracycline: All liquid oral drug products formulated for pediatric use containing tetracycline in a concentration greater than 25 milligrams/milliliter.

Ticrynafen: All drug products containing ticrynafen.

Tribromsalan: All drug products containing tribromsalan.

Trichloroethane: All aerosol drug products intended for inhalation containing trichloroethane.

Urethane: All drug products containing urethane.

Vinyl chloride: All aerosol drug products containing vinyl chloride.

Zirconium: All aerosol drug products containing zirconium.

Zomepirac sodium: All drug products containing zomepirac sodium.

Dated: March 1, 1999.

William K. Hubbard,

Acting Deputy Commissioner for Policy.

[FR Doc. 99–5517 Filed 3–5–99; 8:45 am]

BILLING CODE 4160–01–F

DEPARTMENT OF HEALTH AND HUMAN SERVICES

Food and Drug Administration

21 CFR Part 874

[Docket No. 98N–0249]

Ear, Nose, and Throat Devices; Classification of the Nasal Dilator, the Intranasal Splint, and the Bone Particle Collector

AGENCY: Food and Drug Administration, HHS.

ACTION: Final rule.

SUMMARY: The Food and Drug Administration (FDA) is classifying the nasal dilator, intranasal splint, and the bone particle collector into class I (general controls). FDA is also exempting the devices from the requirements of premarket notification. This action is taken under the Federal Food, Drug, and Cosmetic Act (the act), as amended by the Medical Device Amendments of 1976 (the amendments), the Safe Medical Devices Act of 1990 (SMDA), and the Food and Drug Administration Modernization Act of 1997 (FDAMA).

EFFECTIVE DATE: April 7, 1999.

FOR FURTHER INFORMATION CONTACT: Harry R. Sauberman, Center for Devices and Radiological Health (HFZ–470), Food and Drug Administration, 9200 Corporate Blvd., Rockville, MD 20850, 301–594–2080.

SUPPLEMENTARY INFORMATION:

I. Background

In the **Federal Register** of May 11, 1998 (63 FR 25794), FDA issued a proposed rule to classify the nasal dilator, the intranasal splint, and the bone particle collector into class I (general controls) and to exempt them from premarket notification procedures based on new information regarding these devices.

Interested persons were given until August 10, 1998, to comment on the proposed rule. During the comment period, FDA received one comment that raised the following three issues about the nasal dilator:

(1) The comment suggested that the intended use of the external nasal dilator be expanded to also include transient causes for breathing difficulties in addition to structural abnormalities, such as nasal congestion due to colds, allergies or vasomotor rhinitis.

FDA agrees that the intended use should be expanded to include transient causes for breathing difficulties and has revised the final rule accordingly. FDA does not believe that it is necessary, for purposes of this rule, to include in the identification of the device specific disease states or conditions for transient causes for breathing difficulties.

(2) The comment also proposed the description of the external nasal dilator be changed to ''The external nasal dilator is constructed from one or more layers of material upon which a spring material is attached, with a skin adhesive applied to adhere to the skin of the nose.''

FDA agrees that this is an appropriate description of the external nasal dilator and has revised the final rule accordingly.

(3) The comment also proposed that the risks to health for the external nasal dilator be amended to state that ''the use of the external nasal dilator presents no plausible risk of ulceration and subsequent infection of the mucous membranes and such risk would be more accurately associated only with internal nasal dilators.''

FDA agrees that the risk of possible ulceration and subsequent infection of the mucous membrane would only apply to the internal nasal dilator. This does not affect the classification of the device or the final rule in any way.

II. Conclusion

FDA has concluded that the nasal dilator, the intranasal splint, and the bone particle collector do not present unreasonable risks to the public health and that general controls would provide reasonable assurance of the safety and effectiveness of the devices. FDA also concludes that in the final rule the identification of the nasal dilator be revised to ''A nasal dilator is a device intended to provide temporary relief from transient causes of breathing difficulties resulting from structural abnormalities and/or transient causes of nasal congestion associated with reduced nasal airflow.'' FDA notes that the external nasal dilator is constructed from one or more layers of material upon which a spring material is attached, with a skin adhesive applied to adhere to the skin of the nose and that the potential risk to health of ulceration and subsequent infection apply only to use of the internal nasal dilator and to use of the internal dilator.

On November 21, 1997, the President signed FDAMA into law. Section 206 of FDAMA, in part, added a new section 510(l) to the act (21 U.S.C. 360(l)). Under section 501 of FDAMA, new section 510(l) became effective on February 19, 1998. New section 510(l) of the act provides that a class I device is exempt from the premarket notification requirements under section 510(k) of the act, unless the device is intended for a use which is of substantial importance in preventing impairment of human health or it presents a potential unreasonable risk of illness or injury (hereafter referred to as ''reserved criteria''). FDA has determined that the devices do not meet the reserved criteria, and therefore, they are exempt from the premarket notification requirements. FDA is finalizing the classification of these devices and the exemption from premarket notification for these devices.

FDA also notes that § 874.9 *Limitations of exemptions from section 510(k) of the act* (21 CFR 874.9) requires manufacturers to submit a premarket notification of any nasal dilator, intranasal splint, or bone particle collector whose intended use is different from the intended use of any legally marketed nasal dilator, intranasal splint, or bone particle collector.

III. Environmental Impact

The agency has determined under 21 CFR 25.34(b) that this classification action is of a type that does not individually or cumulatively have a significant effect on the human environment. Therefore, neither an environmental assessment nor an environmental impact statement is required.

IV. Analysis of Impacts

FDA has examined the impacts of the final rule under Executive Order 12866 and the Regulatory Flexibility Act (5 U.S.C. 601–612). Executive Order 12866 directs agencies to assess all costs and benefits of available regulatory alternatives and, when regulation is necessary, to select regulatory approaches that maximize net benefits (including potential economic, environmental, public health and safety, and other advantages; distributive impacts; and equity). The agency believes that this final rule is consistent with the regulatory philosophy and principles identified in the Executive Order. In addition, the final rule is not a significant regulatory action as defined by the Executive Order and so is not subject to review under the Executive Order.

The Regulatory Flexibility Act requires agencies to analyze regulatory options that would minimize any significant impact of a rule on small entities. As noted previously, FDA may classify devices into one of three regulatory classes according to the degree of control needed to provide reasonable assurance of safety and effectiveness. FDA is classifying these three devices into class I, the lowest level of control allowed. As unclassified devices, the devices have already been subject to the general controls of the act. Under the final rule, they will now be exempt from premarket notification. Therefore, the agency certifies that this final rule will not have a significant economic impact on a substantial number of small entities. Therefore, under the Regulatory Flexibility Act, no further analysis is required.

V. Paperwork Reduction Act of 1995

FDA concludes that this final rule contains no collections of information. Therefore, clearance by the Office of Management and Budget under the Paperwork Reduction Act of 1995 is not required.

List of Subjects in 21 CFR Part 874

Medical devices.

Therefore, under the Federal Food, Drug, and Cosmetic Act and under authority delegated to the Commissioner of Food and Drugs, 21 CFR part 874 is amended as follows:

PART 874—EAR, NOSE, AND THROAT DEVICES

1. The authority citation for 21 CFR part 874 continues to read as follows:

Authority: 21 U.S.C. 351, 360, 360c, 360e, 360j, 371.

2. Section 874.3900 is added to subpart D to read as follows:

§ 874.3900 Nasal dilator.

(a) *Identification*. A nasal dilator is a device intended to provide temporary relief from transient causes of breathing difficulties resulting from structural abnormalities and/or transient causes of nasal congestion associated with reduced nasal airflow. The device decreases airway resistance and increases nasal airflow. The external nasal dilator is constructed from one or more layers of material upon which a spring material is attached, with a skin adhesive applied to adhere to the skin of the nose; it acts with a pulling action to open the nares. The internal nasal dilator is constructed from metal or plastic and is placed inside the nostrils; it acts by pushing the nostrils open or by gently pressing on the columella.

(b) *Classification*. Class I (general controls). The device is exempt from the premarket notification procedures in subpart E of part 807 of this chapter subject to the limitations in § 874.9.

3. Section 874.4780 is added to subpart E to read as follows:

§ 874.4780 Intranasal splint.

(a) *Identification*. An intranasal splint is intended to minimize bleeding and edema and to prevent adhesions between the septum and the nasal cavity. It is placed in the nasal cavity after surgery or trauma. The intranasal splint is constructed from plastic, silicone, or absorbent material.

(b) *Classification*. Class I (general controls). The device is exempt from the premarket notification procedures in subpart E of part 807 of this chapter subject to the limitations in § 874.9.

4. Section 874.4800 is added to subpart E to read as follows:

§ 874.4800 Bone particle collector.

(a) *Identification*. A bone particle collector is a filtering device intended to be inserted into a suction tube during the early stages of otologic surgery to collect bone particles for future use.

(b) *Classification*. Class I (general controls). The device is exempt from premarket notification procedures in subpart E of part 807 of this chapter subject to the limitations in § 874.9.

Dated: March 1, 1999.

William K. Hubbard,

Acting Deputy Commissioner for Policy.

[FR Doc. 99–5516 Filed 3–5–99; 8:45 am]

BILLING CODE 4160–01–F

DEPARTMENT OF STATE

22 CFR Part 171

[Public Notice 3001]

Privacy Act of 1974; Implementation

AGENCY: Department of State.

ACTION: Final rule.

SUMMARY: The Department of State is amending its regulations by exempting portions of a record system from certain provisions of the Privacy Act of 1974, as amended (5 U.S.C. 552a). Certain portions of the Records of the Office of White House Liaison (STATE–34) are exempted from 5 U.S.C. 552a (c)(3), (d), (e)(1), e(4)(G), (H) and (I), and (f).

EFFECTIVE DATE: April 7, 1999.

FOR FURTHER INFORMATION CONTACT: Margaret Peppe, 202–647–6338.

SUPPLEMENTARY INFORMATION: A notice of proposed rulemaking was published in the **Federal Register** (64 FR 922, January 6, 1999) inviting interested persons to submit comments concerning the proposed regulations. Since no comments were received, the amendment to the Privacy Provisions of the Department of State's Access to Information regulations was formally adopted as published.

List of Subjects in 22 CFR Part 171:

Privacy.

PART 171—[AMENDED]

1. The authority citation for part 171 continues to read as follows:

Authority: The Freedom of Information Act, 5 U.S.C. 552; the Privacy Act, 5 U.S.C. 552a; the Administrative Procedures Act, 5 U.S.C. 551, *et seq.*; the Ethics in Government Act, 5 U.S.C. App. 201; Executive Order 12958, 60 FR 19825; and Executive Order 12600, 52 FR 23781.

§ 171.32 [Amended]

2. In § 171.32, paragraph (j)(2) will be amended by adding ''Records of the Office of White House Liaison, STATE–34,'' after ''Records of the Inspector General and Automated Individual Cross-Reference System, STATE–53.''

Dated: March 1, 1999.

Patrick F. Kennedy,

Assistant Secretary for the Bureau of Administration.

[FR Doc. 99–5622 Filed 3–5–99; 8:45 am]

BILLING CODE 4710–05–P

DEPARTMENT OF THE TREASURY

Bureau of Alcohol, Tobacco and Firearms

27 CFR Part 13

[T.D. ATF–406a]

RIN 1512–AB34

Procedures for the issuance, Denial, and Revocation of Certificates of Label Approval, Certificates of Exemption From Label Approval, and Distinctive Liquor Bottle Approvals (93F–029P); Correction

AGENCY: Bureau of Alcohol, Tobacco and Firearms (ATF), Department of the Treasury.

ACTION: Final rule; correction.

SUMMARY: This document corrects the regulatory text of a final rule published in the **Federal Register** of January 13, 1999, regarding issuance, denial, and revocation of certificates of label approval, certificates of exemption from label approval, and distinctive liquor bottle approvals.

DATES: Effective March 15, 1999.

FOR FURTHER INFORMATION CONTACT: Edward A. Reisman, Product Compliance Branch, Bureau of Alcohol, Tobacco and Firearms, 650 Massachusetts Avenue, NW, Washington, DC 20226, Telephone (202) 927–8140.

SUPPLEMENTARY INFORMATION: The Bureau of Alcohol, Tobacco and Firearms published a document in the **Federal Register** of January 13, 1999, (64 FR 2122). Several words were omitted from the text of 27 CFR 13.27. This document corrects this error.

In rule FR Doc. 99–624, published on January 13, 1999, make the following correction:

§ 13.27 [Corrected]

On page 2131, in the center column, correct the first full sentence of § 13.27(a) to read: ''The decision of the Chief, Product Compliance Branch, may be appealed in writing to the Chief,

Alcohol and Tobacco Programs Division, within 45 days after the date of the decision of the Chief, Product Compliance Branch.''

Signed: February 23, 1999.

John W. Magaw,

Director, Bureau of Alcohol, Tobacco and Firearms.

[FR Doc. 99–5090 Filed 3–5–99; 8:45 am]

BILLING CODE 4810–31–U

POSTAL SERVICE

39 CFR Part 111

Use and Determination of Postage Value of Breast Cancer Research Semi-postal Stamp

AGENCY: Postal Service.

ACTION: Final rule; response to Comments.

SUMMARY: This rule responds to comments on the final rule published in the **Federal Register** on July 16, 1998 (63 FR 38309), on which the Postal Service had sought comments concerning the use and determination of postage value of the Breast Cancer Research Semi-postal Stamp. The Postal Service has made minor changes to the Domestic Mail Manual standards pertaining to the exchange value.

EFFECTIVE DATE: In accordance with the final rule published on July 16, 1998, the effective date for the final rule was July 29, 1998. Amendments to Domestic Mail Manual language published here as a response to comments were effective January 10, 1999.

FOR FURTHER INFORMATION CONTACT: Anne Emmerth, (202) 268–2363.

SUPPLEMENTARY INFORMATION: On July 16, 1998, the Postal Service published in the **Federal Register** a final rule (61 FR 38309) that established the standards in the Domestic Mail Manual (DMM) governing the use and determination of postage value of the Breast Cancer Research Semi-postal Stamp. The final rule took effect on July 29, 1998, the first date on which the Breast Cancer Research Semi-postal Stamp was made available for sale to the public in accordance with the Stamp Out Breast Cancer Act, Pub. L. 105–41, 111 Stat. 1119 (1997). The Stamp Out Breast Cancer Act provides that the Postal Service make a Breast Cancer Research Semi-postal Stamp available for sale to the public no later than August 13, 1998.

Although the Postal Service published the DMM standards pertaining to the Breast Cancer Research Semi-postal Stamp as a final rule, the Postal Service solicited public comment on the DMM standards implementing the Stamp Out Breast Cancer Act. The Postal Service received three comments, which are addressed below. The Postal Service has made minor changes to DMM standards pertaining to the exchange value of Breast Cancer Research Semi-postal Stamps. These revisions were effective January 10, 1999.

One concern raised by two commenters relates to the stamp's postage value. In particular, the commenters noted that the postage value of the stamp will be determined by the First-Class Mail single-piece first-ounce rate in effect at the time of purchase, in lieu of the First-Class Mail single-piece first-ounce rate effective at the time of usage. The commenters expressed concern that this measure may be confusing for customers, given that the Breast Cancer Research Semi-postal Stamp does not bear a numerical denomination.

The Postal Service is sensitive to the commenters' concerns; however, these standards are necessary to protect postal revenues. The Postal Service determines the amount of money available for breast cancer research based upon the First-Class Mail single-piece rate in effect at the time of purchase.

One commenter suggested that the Postal Service should issue semi-postal stamps bearing a numerical value equivalent to the First-Class Mail single-piece rate in effect at the time of purchase. The Postal Service appreciates this suggestion. In this case, however, the interests of administrative and operational simplicity are served by the absence of a numerical value on the stamp. It would have been difficult to adopt the commenter's suggestion in this case, because the Postal Service could not predict the quantity of stamps that should be printed at each rate, given that, at the time the stamps had to be produced, no final decisions on rate changes, or their effective date, had been made.

Two commenters asked why customers will be required to present a dated receipt in order to receive exchanges for 33 cents postage. In response to these comments, the Postal Service will not require customers to present a receipt in order to receive exchanges for Breast Cancer Research Semi-postal Stamps. Breast Cancer Research Semi-postal Stamps will be exchanged at the postage value in effect at the time of exchange. The Postal Service does not expect to exchange many Breast Cancer Research Semi-postal Stamps, as self-adhesive stamps may only be exchanged under limited circumstances (see Domestic Mail Manual P014.1.8).

One commenter questions why the conversion and exchange value of the Breast Cancer Research Semi-postal Stamp is limited to its postage value. This standard is required because, by operation of the Stamp Out Breast Cancer Act, the revenue that the Postal Service receives from the differential (net of the stamp selling price and the postage value) must be transferred to the Department of Defense and the National Institutes of Health for the purpose of breast cancer research. Consequently, once the differential revenue is transferred, the Postal Service will not have access to the differential revenue paid for the purpose of funding postage exchanges and conversions.

One commenter questions whether the amount of the differential applies toward the $100 exchange limit in DMM P014.1.2. The exchange limit per transaction of $100 in P014.1.2 is not affected by the amount of the differential.

One commenter believes that the Stamp Out Breast Cancer Act should be interpreted so that the differential amount varies depending upon the First-Class Mail postage rate applicable to pieces weighing more than one ounce. This interpretation has no support in the legislative history, and would, moreover, require the adoption of sales and usage practices that would be completely unworkable. Under this interpretation, the Postal Service could not set a uniform price for the stamp; rather, the amount of differential would have to be separately determined whenever customers intended to use Breast Cancer Research Semi-postal Stamps to pay for postage above the first-ounce rate. This would also have the adverse effect of limiting the stamp's marketability and utility, since the stamp's price would have to be separately determined for each mailing transaction.

One commenter asked what postage value Breast Cancer Research Semi-postal Stamps would have when such stamps are used in multiples. Each Breast Cancer Research Semi-postal Stamp purchased before January 10, 1999, will have a postage value of $0.32, regardless of whether such stamps are used in multiples.

One commenter questioned whether the Breast Cancer Research Semi-postal Stamp could be used to pay postage for classes of mail other than First-Class Mail, or for international mail. Breast Cancer Research Semi-postal Stamps are considered nondenominated stamps and may be used on domestic classes other than First-Class Mail to the extent

postage may be paid by stamps in accordance with the payment standards for the appropriate class of mail. Recently adopted amendments to DMM P022.2.1 and International Mail Manual (IMM) section 152.2 make clear that the Breast Cancer Research Semi-postal Stamp may be used on international mail. See Postal Bulletin 21978 (August 13, 1998).

Finally, one commenter was disappointed that funds raised through the sale of the stamp would be given to the Department of Defense. This comment exceeds the scope of the final rule. The Postal Service is not authorized to select the organizations that receive contributions to breast cancer research made by purchasers of the Breast Cancer Research Semi-postal Stamp. Rather, the Stamp Out Breast Cancer Act directs the Postal Service to pay prescribed percentages of the revenue from the differential to the National Institutes of Health and the Department of Defense.

Although exempt from the notice and comment requirements of the Administrative Procedure Act (5 U.S.C. 553(b), (c)) regarding rulemaking by 39 U.S.C. 410(a), the Postal Service hereby amends the following standards of the Domestic Mail Manual (DMM), incorporated by reference in the Code of Federal Regulations. See 39 CFR part 111.

List of Subjects in 39 CFR Part 111

Postal Service.

PART 111—[AMENDED]

1. The authority citation for 39 CFR part 111 continues to read as follows:

Authority: 5 U.S.C. 552(a); 39 U.S.C. 101, 401, 403, 414, 3001–3011, 3201–3219, 3403–3406, 3621, 3626, 5001.

2. Revise the following sections of the Domestic Mail Manual as set forth below:

P Postage and Payment Methods

* * * * *

P014 Refunds and Exchanges

1.0 STAMP EXCHANGES

1.1 USPS Fault

[Revise to read:]

The post office may correct mistakes in selling damaged, defective, or otherwise unserviceable stamps by exchanging stamps at full postage value.

1.2 Damaged in Customer's Possession

[Revise the last sentence to read as follows:]

* * * Each such transaction is limited to $100 worth of postage from each customer.

* * * * *

1.5 Purchase Error

[Revise the first sentence to read as follows:]

If a customer bought the wrong denomination stamps (or the wrong kind, size, or denomination envelope), they may be exchanged at full postage value. * * *

* * * * *

2.0 POSTAGE AND FEES REFUNDS

* * * * *

[Revise new 2.10 to read as follows:]

2.10 Breast Cancer Research Semi-postal Stamps

Customers may exchange or convert Breast Cancer Research Semi-postal Stamps for their postage value, i.e., the price of the stamps less the contribution amount, to the extent exchange or conversion of postage stamps is permitted under P014. The postage exchanged or converted is equivalent to the First-Class Mail single-piece rate in effect at the time of exchange. The contribution amount is not included in the exchange or conversion value.

* * * * *

P020 Postage Stamps and Stationery

P022 Adhesive Stamps

1.0 PURCHASE AND USE

* * * * *

[Revise 1.6 to read as follows:]

1.6 Breast Cancer Research Semi-postal Stamps

Breast Cancer Research Semi-postal Stamps are subject to special limitations and conditions:

a. Breast Cancer Research Semi-postal Stamps provide a means for customers to make contributions toward breast cancer research. Breast Cancer Research Semi-postal Stamps are offered for sale for a limited time as provided under 39 U.S.C. 414.

b. The price of the Breast Cancer Research Semi-postal Stamp is 40 cents. The postage value of the Breast Cancer Research Semi-postal Stamp is the First-Class Mail Nonautomation Single-Piece first-ounce letter rate in R100.1.2 that is in effect at the time of purchase. The difference between the purchase price and the First-Class Mail Nonautomation Single-Piece first-ounce letter rate in effect at the time of purchase constitutes a contribution to breast cancer research, and cannot be used to pay postage. Additional postage must be affixed to pieces weighing in excess of one ounce, pieces subject to the nonstandard surcharge, or pieces for which special services have been elected. The postage value of Breast Cancer Research Semi-postal Stamps is fixed according to the First-Class Mail Nonautomation Single-Piece first-ounce letter rate in effect at the time of purchase; the postage value of Breast Cancer Research Semi-postal Stamps purchased before any subsequent change in the First-Class Mail Nonautomation Single-Piece first-ounce letter rate is unaffected by any subsequent change in that rate.

c. Contributions to breast cancer research made through purchase of Breast Cancer Research stamps are not refundable. The postage value of Breast Cancer Research stamps for purposes of exchange or conversion under P014 is determined by the First-Class Mail Nonautomation Single-Piece rate in effect at the time of purchase, or as otherwise provided in P014.2.10.

* * * * *

R Rates and Fees

R000 Stamps and Stationery

* * * * *

[Amend the table in R000.4.0 to revise the following line item:]

Purpose	Form	Denomination
*	* *	* * * *
Breast Cancer Research	Panes of up to 20	Purchase Price of $0.40; Postage Value Equivalent to First-Class Mail Nonautomation Single-Piece Rate (currently $0.32); remainder is contribution to fund Breast Cancer Research.

* * * * *

An appropriate amendment to 39 CFR 111.3 will be published to reflect these changes.

Stanley F. Mires,

Chief Counsel, Legislative.

[FR Doc. 99–5319 Filed 3–5–99; 8:45 am]

BILLING CODE 7710–12–P

DEPARTMENT OF COMMERCE

National Oceanic and Atmospheric Administration

50 CFR Part 679

[I.D. 101498C]

RIN 0648–AJ50

Fisheries of the Exclusive Economic Zone Off Alaska; Amendment 56 to the Fishery Management Plan for Groundfish of the Gulf of Alaska and Amendment 56 to the Fishery Management Plan for the Groundfish Fishery of the Bering Sea and Aleutian Islands Area

AGENCY: National Marine Fisheries Service (NMFS), National Oceanic and Atmospheric Administration (NOAA), Commerce.

ACTION: Approval of fishery management plan amendments.

SUMMARY: NMFS announces the approval of Amendment 56 to the Fishery Management Plan for Groundfish of the Gulf of Alaska and Amendment 56 to the Fishery Management Plan for the Groundfish Fishery of the Bering Sea and Aleutian Islands Area. These amendments revise the definition of overfishing levels (OFL) for groundfish species or species groups in these fishery management plans (FMPs). This action is necessary to revise the definition of OFL for compliance with the Magnuson-Stevens Fishery Conservation and Management Act (Magnuson-Stevens Act) and is intended to advance the ability of the North Pacific Fishery Management Council (Council) to achieve, on a continuing basis, the optimum yield from fisheries within its geographical area of authority.

DATES: The amendments were approved January 27, 1999.

ADDRESSES: Copies of Amendments 56/56 and the Environmental Assessment (EA) and related analyses are available from the Council, 605 West 4th Avenue, Suite 306, Anchorage, AK 99501–2252; telephone 907–271–2809.

FOR FURTHER INFORMATION CONTACT: James Hale, 907–586–7228.

SUPPLEMENTARY INFORMATION:

Background

Section 301(a) of the Magnuson-Stevens Act establishes national standards for fishery conservation and management. All FMPs prepared under the authority of the Magnuson-Stevens Act must be consistent with those standards. National standard 1 requires conservation and management measures to ''prevent overfishing while achieving, on a continuing basis, the optimum yield'' from fisheries in Federal waters. National standard 2 requires that conservation and management measures be based on the best scientific information available.

Prior to its amendment in 1996, the Magnuson-Stevens Act did not define overfishing. Advisory national standard guidelines for the development of FMPs and amendments, pursuant to section 301(b) of the Magnuson-Stevens Act, required that each FMP specify an objective and measurable definition of overfishing for each managed stock or stock complex. The guidelines further required that an overfishing definition (1) have sufficient scientific merit; (2) be likely to protect the stock from closely approaching or reaching an overfished status; (3) provide a basis for objective measurement of the status of the stock against the definition; and (4) be operationally feasible. The Council developed such an objective and measurable definition of overfishing and, in 1991, implemented that definition under Amendments 16 and 21 to the Alaska groundfish FMPs (56 FR 2700, January 24, 1991).

In 1996, with increased understanding of the reference fishing mortality rates used to determine Acceptable Biological Catches (ABCs) and OFLs, the Council recommended, and NMFS approved, the existing definition of overfishing—a six-tiered system accommodating different levels of reliable information available to fishery scientists for determining OFLs. Fishery scientists use the equations from an appropriate tier to determine when a stock is overfished according to the reliability of information available. The six-tiered system accomplishes three basic functions: (1) It compensates for uncertainty in estimating fishing mortality rates at a level of maximum sustainable yield (MSY) by establishing fishing mortality rates more conservatively as biological parameters become more imprecise; (2) it relates fishing mortality rates directly to biomass for stocks below target abundance levels, so that fishing mortality rates fall to zero should a stock become critically depleted; and (3) it maintains a buffer between ABC and the overfishing level. Further information and background on the OFL definition contained in Amendments 44/44 may be found in the notice of availability published at 61 FR 54145 on October 17, 1996.

Revised definition of OFL

On October 11, 1996, the President signed into law the Sustainable Fisheries Act (Pub.L. 104–297), which made numerous amendments to the Magnuson-Stevens Act. The amended Magnuson-Stevens Act now defines the terms ''overfishing'' and ''overfished'' to mean a rate or level of fishing mortality that jeopardizes the capacity of a fishery to produce MSY on a continuing basis (section 3(29)), and requires that all FMPs:

> Specify objective and measurable criteria for identifying when the fishery to which the plan applies is overfished (with an analysis of how the criteria were determined and the relationship of the criteria to the reproductive potential of stocks of fish in that fishery) and, in the case of a fishery which the Council or the Secretary has determined is approaching an overfished condition or is overfished, contain conservation and management measures to prevent overfishing and rebuild the fishery (section 303 (a)(10)).

The Magnuson-Stevens Act required all regional fishery management councils to submit amendments, by October 11, 1998, that would bring their FMPs into compliance.

In April 1998, the Council and its Advisory Panel and Scientific and Statistical Committee (SSC) reviewed a draft analysis of alternatives for revising the existing OFL definitions and, in June 1998, the Council recommended the preferred alternative as Amendments 56/56 to the groundfish FMPs. These amendments revise the definition of overfishing for consistency with the requirements of the Magnuson-Stevens Act.

NMFS published a notice of availability for proposed Amendments 56/56, describing the proposed amendments and inviting public comments, in the **Federal Register** at 63 FR 57094 on October 26, 1998. NMFS received one written comment opposing the proposed definition of overfishing contained in Amendments 56/56. NMFS responds to the comment in the following paragraphs.

Comment: Amendments 56/56 should not be approved for two reasons. First, the overfishing definition does not contain a minimum stock size threshold (MSST) as called for by NMFS' national standard guidelines. The guidelines, published at 50 CFR 600.305, are not discretionary and, hence, the absence of

an MSST amounts to a violation of the Magnuson-Stevens Act. An MSST is necessary to provide for rebuilding overfished stocks within the statutory 10-year time frame established by the Magnuson-Stevens Act. Based on the preamble to the final rule implementing the guidelines (63 FR 24218; May 1, 1998), a maximum fishing mortality threshold and an MSST are required because the function of the former is to end overfishing, but the function of the latter is to provide for rebuilding. Without an MSST, an overfishing definition would thus only partially comply with the Magnuson-Stevens Act's requirements regarding overfished stocks.

Second, the amendments should not be approved because the procedure for developing the amendments failed to comply with National Environmental Policy Act (NEPA) requirements that the environmental assessment (EA) consider a range of alternatives.

Response: NMFS reexamined the proposed amendments in relation to the national standard guidelines, and the Director, Alaska Science Center, NMFS, certified that the overfishing definition contained in Amendments 56/56 comply with the 50 CFR part 600 guidelines.

The guidelines require that overfishing determination criteria specify ''a minimum stock size threshold or reasonable proxy thereof'' (50 CFR 600.310(d)(2)(ii)). Although the amendments do not specify an MSST, NMFS has concluded that the overfishing definition contained in Amendments 56/56 does contain a reasonable proxy for MSST. This proxy takes the form of the parameter α in the overfishing definition, which determines the relative stock size below which fishing is prohibited. Although the amendments set α at a default value that does not require fishing to cease until a stock falls below 5 percent of the level required to produce MSY, the amendments allow for the Council to set α on a case-by-case basis. Thus, in the event that a stock falls below the level that can produce MSY, and that an α value of 0.05 percent does not result in an expectation that the stock will rebuild to that level within 10 years when fished at the minimum fishing mortality threshold, it would be reasonable to consider such a stock overfished. Upon that determination, the SSC has the prerogative of adjusting α to achieve rebuilding within 10 years.

Furthermore, NMFS disagrees that the overfishing definition contained in Amendments 56/56 is insufficient to satisfy the Magnuson-Stevens Act's requirements for rebuilding overfished stocks. The comment assumes that, with the present policy and the proposed amendments, the Council would rely solely on a reduction of fishing mortality rates to rebuild an overfished stock and that an MSST criterion would necessarily require additional measures be taken to rebuild overfished stocks. The MSST criterion, like the proxy for MSST contained in the amendments, simply provides a mechanism for designating the point at which a rebuilding plan must be instituted.

The use of a fishing mortality rate criterion for designating when overfishing occurs—while it automatically institutes one measure for rebuilding (a reduction of the fishing effort)—does not preclude the implementation of additional measures as deemed necessary for rebuilding. The Council's biomass-based policy currently operative in management of the groundfish fisheries off Alaska provides that rebuilding automatically begins by a reduction in fishing rates when stocks decrease in size. Additional actions for rebuilding within the statutory timeframe of 10 years established by the Magnuson-Stevens Act may be implemented as necessary by the Council and NMFS.

Also, NMFS disagrees that NEPA requirements for review of reasonable alternatives were not met in the development of the EA for this action. The initial draft EA submitted to the SSC and Council in April 1998 contained two alternatives to the status quo, each of which contained the MSST criterion. Discussion of these alternatives, labeled Alternatives 2 and 3 in the April draft of the EA, led the SSC to request that, due to the complexity of the issue, the third alternative be dropped in the interest of facilitating ''more deliberative consideration'' of ''better alternatives'' (SSC Minutes, April 1998, p. 6). The SSC also requested that a revised draft EA present the second alternative without an MSST. The SSC further stated:

> The Council policy of using a biomass-based policy that reduces fishing mortality as stocks decrease in size was deliberately selected to provide for automatic rebuilding. In contrast, the NMFS' guideline does not require action until stocks approach the MSST. There is substantial literature to indicate that a biomass-based policy is comparable to or better than a threshold policy. The added complexity of a threshold policy on top of a biomass-based policy serves no useful purpose, is harder to implement, and will be harder for the public to understand. The current stock assessment approach is sufficient to assure that the harvest levels provide for sufficient rebuilding within the specified period of 10 years found in the Magnuson-Stevens Act. (SSC minutes, April 1998, p. 6)

The alternatives contained in the initial draft EA and those contained in the revised draft EA constitute a reasonable range of alternatives such as required those under NEPA. Furthermore, the analysis of those alternatives contained in the draft EAs is sufficient to determine that an environmental impact statement is not necessary for these amendments. In order to provide all reasonable alternatives in one document and to reflect more fully the decision-making process that led to the proposed action, NMFS combined the April 1998 and June 1998 drafts into a revised and final EA that exhibits all the alternatives reviewed and discussed by the SSC and Council and considered by NMFS.

NMFS determined that Amendments 56/56 are consistent with the Magnuson-Stevens Act and other applicable law and approved Amendments 56/56 on January 27, 1999. Additional information on this action is contained in the October 26, 1998, Notice of Availability (63 FR 57094).

No regulatory changes are necessary to implement these FMP amendments.

Authority: 16 U.S.C. 1801 *et seq.*

Dated: March 1, 1999.

Gary C. Matlock,

Director, Office of Sustainable Fisheries, National Marine Fisheries Service.

[FR Doc. 99–5501 Filed 3–5–99; 8:45 am]

BILLING CODE 3510–22–F

Proposed Rules

Federal Register
Vol. 64, No. 44
Monday, March 8, 1999

This section of the FEDERAL REGISTER contains notices to the public of the proposed issuance of rules and regulations. The purpose of these notices is to give interested persons an opportunity to participate in the rule making prior to the adoption of the final rules.

FARM CREDIT ADMINISTRATION

12 CFR Part 602

RIN 3052–AB84

Releasing Information

AGENCY: Farm Credit Administration (FCA).

ACTION: Proposed rule.

SUMMARY: This proposed rule would amend FCA regulations concerning the release of information under the Freedom of Information Act (FOIA) to:

- Reflect revised fees and make it easier for the public to obtain FCA records;
- Revise the procedures for requests for testimony by FCA employees on official matters and for the production of FCA documents in litigation when FCA is not a named party; and
- Add procedures for requesting records in public rulemaking files.

The proposed regulation is more concise and easier to understand.

DATES: Please submit comments on or before April 7, 1999.

ADDRESSES: You may send us your comments via E-mail to ''reg-comm@fca.gov'' through the Pending Regulations section of our interactive website at ''www.fca.gov.'' You may also mail or deliver your comments to Patricia W. DiMuzio, Director, Regulation and Policy Division, Office of Policy and Analysis, Farm Credit Administration, 1501 Farm Credit Drive, McLean, Virginia 22102–5090, or send them by facsimile transmission to FAX number (703) 734–5784. You may review copies of all comments we receive in the Office of Policy and Analysis, Farm Credit Administration.

FOR FURTHER INFORMATION CONTACT:

John Hays, Policy Analyst, Office of Policy and Analysis, Farm Credit Administration, 1501 Farm Credit Drive, McLean, VA 22102–5090, (703) 883–4498, TDD (703) 883–4444, or

Jane Virga, Senior Attorney, Office of General Counsel, Farm Credit Administration, 1501 Farm Credit Drive, McLean, VA 22102–5090, (703) 883–4020, TDD (703) 883–4444.

SUPPLEMENTARY INFORMATION: In addition to streamlining the regulation, we propose to add the following new provisions:

1. *§ 602.2(b)* expresses the FCA policy that permits a Farm Credit System institution to disclose its report of examination to its officers, directors, and agents, such as attorneys and accountants, if they agree to keep the report confidential.

2. *§ 602.2(d)* outlines when FCA may release documents to governmental entities without waiving any exemption.

3. *§ 602.3* includes definitions of common FOIA terms. They are recited as an aid to the public and are not intended to affect any individual's rights under the FOIA.

4. *§ 602.4(a)* provides addresses for forwarding requests by mail, facsimile, and E-mail.

5. *§ 602.4(f)* provides that the Office of Congressional and Public Affairs will make available copies of public documents.

6. *§ 602.5(c)* explains when FCA will refer a document request to another Federal agency.

7. *§ 602.8(a)* provides that the time for an appeal begins to run from the date of the FCA letter granting or denying the request and not from the date the requester receives it. This change ensures clarity in determining the appeal period. It also provides addresses for forwarding appeals by mail, facsimile, and E-mail.

8. *§ 602.12(b)* establishes that FCA will automatically waive FOIA fees when assessable fees are less than $15.00. Current § 602.268(b) does not establish a threshold level. This change ensures uniform treatment of minimal FOIA fees.

9. *§ 602.20(c)* adds that FCA counsel may represent FCA's interests at a deposition.

10. *§ 602.22* (currently § 602.287) makes the fee structure for obtaining privileged documents in litigation when the FCA is not a party the same as those assessed under the FOIA.

11. *§ 602.25* addresses public rulemaking files. It explains how to obtain documents in public rulemaking files and what FCA will charge for reproduction costs.

12. *General.* We have changed the language throughout the regulation to reflect that: (1) FCA examines entities other than Farm Credit System institutions; (2) privileges apply to all FCA reports of examination; and (3) computer records and other nonpaper records are FCA records.

Finally, we propose to delete the following sections from the current regulation:

1. *§ 602.205,* which distinguished between the consent required for the disclosure of regular and special FCA reports of examination. Proposed § 602.2 eliminates this distinction.

2. *§ 602.215,* which addresses the confidentiality of borrower and applicant data and prohibits FCA employees from releasing it. This section addresses internal FCA procedures and is redundant with portions of § 618.8320 of this chapter. Despite this deletion, we will continue to prohibit FCA employees from disclosing confidential information.

3. *§ 602.250(a)(8)* discusses exemption (b)(8) of the FOIA and certain reports filed with FCA. The portion that we propose to delete provides that, notwithstanding the application of exemption (b)(8) of the FOIA, reports to shareholders and items in reports of condition and performance filed with FCA that are essentially the same as those disclosed to shareholders are available to the public on request for a reasonable fee. We deleted this discussion because it merely illustrates how FCA typically applies, and makes an exception to, exemption (b)(8) of the FOIA. Despite this deletion, we will continue to release such information upon request in appropriate circumstances.

List of Subjects in 12 CFR Part 602

Administrative practice and procedure, Courts, Freedom of information, Government employees.

For the reasons stated in the preamble, part 602 of chapter VI, title 12 of the Code of Federal Regulations is proposed to be revised to read as follows:

PART 602—RELEASING INFORMATION

Subpart A—Information and Records Generally

Sec.
602.1 Purpose and scope.
602.2 Disclosing reports of examination.

Subpart B—Procedures for the Disclosure of Records Under the FOIA

602.3 Definitions.
602.4 Requirements for making a request.
602.5 FCA response to requests for records.
602.6 FOIA exemptions.
602.7 Confidential business information.
602.8 Appeals.
602.9 Current index.

Subpart C—FOIA Fees

602.10 Definitions.
602.11 Fees by type of requestor.
602.12 Fees.
602.13 Fee waiver.
602.14 Advance payments—notice.
602.15 Interest on unpaid fees.
602.16 Aggregating requests.

Subpart D—Testimony and Production of Documents in Legal Proceedings in Which FCA Is Not a Named Party

602.17 Policy.
602.18 Definitions.
602.19 Request for testimony or production of documents.
602.20 Testimony of FCA employees.
602.21 Production of FCA documents.
602.22 Fees.
602.23 Responses to demands served on FCA employees.
602.24 Responses to demands served on non-FCA employees or entities.

Subpart E—Release of Records in Public Rulemaking Files

602.25 General.

Authority: Secs. 5.9, 5.17; 12 U.S.C. 2243, 2252; 5 U.S.C. 301, 552; 52 FR 10012; E.O. 12600, 52 FR 23781, 3 CFR 1987, p. 235.

Subpart A—Information and Records Generally

§ 602.1 Purpose and scope.

This part contains FCA's rules for disclosing FCA records or information; processing requests for records under the Freedom of Information Act (5 U.S.C. 552, as amended)(FOIA); FOIA fees; disclosing otherwise exempt information in litigation when FCA is not a party; and disclosing documents in public rulemaking files. Consult part 603 of this chapter to request records about yourself under the Privacy Act of 1974, 5 U.S.C. 552a.

§ 602.2 Disclosing reports of examination.

(a) *Generally.* Reports of examination are FCA property. They are prepared for the confidential use of FCA and the institution examined. FCA does not provide reports of examination to the public. Only the FCA Chairman or the Chairman's designee may consent to disclosing reports of examination of Farm Credit System institutions and other institutions subject to FCA examination.

(b) *By Farm Credit System institutions.* An institution examined by FCA may disclose its report of examination to its officers, directors, and agents, such as its attorney or accountant, if they agree to keep the report confidential. In addition, banks may disclose their reports of examination to their affiliated associations, associations may disclose their reports to their supervisory bank, and service corporations may disclose their reports of examination to the institutions that own them. An institution may not disclose these institutions' reports of examination to any other person without FCA's written permission.

(c) *By FCA.* Only the FCA Chairman or the Chairman's designee can give permission. You may send a written request to FCA's General Counsel that explains why we should give permission.

(d) *Disclosure to governmental entities.* Without waiving any privilege, we will disclose reports of examination or portions of reports of examination to other Federal government entities:

(1) In response to a Federal court order;

(2) In response to a request of either House, a Committee or a Subcommittee of Congress; or

(3) To authorized representatives of other Federal agencies when requested for confidential use in an official investigation. For any other use, the FCA Chairman must approve the disclosure.

Subpart B—Procedures for the Disclosure of Records Under the FOIA

§ 602.3 Definitions.

(a) *Appeal* means a request under the FOIA asking for the reversal of a decision.

(b) *Business information* means trade secrets or other commercial or financial information that is privileged or confidential.

(c) *Business submitter* means any person or entity that provides business information to the government.

(d) *FOIA request* means a written request for FCA records, made by any natural person or entity that either explicitly or implicitly invokes the FOIA or this part.

(e) *Record* means all documentary materials, such as books, papers, maps, photographs, and machine readable materials, regardless of physical form or characteristics (e.g., electronic form or format) in FCA's possession and control at the time the FOIA request is made.

§ 602.4 Requirements for making a request.

(a) *How to make and address a request.* Your request for records must be in writing and addressed to the FOIA Officer, Farm Credit Administration, as follows:

(1) By mail to 1501 Farm Credit Drive, McLean, Virginia 22102–5090;

(2) By facsimile to (703) 790–0052; or 1. By E-mail to ''foiaofficer@fca.gov.''

(b) *Description of requested records.* You must describe the requested records in enough detail to enable us to locate them with a reasonable effort. If the description is inadequate, we will ask you to provide additional information and the 20-day response period under § 602.5(a) will not begin until we receive your reply.

(c) *Expedited processing.* You may ask for expedited processing of your FOIA request by providing a statement, certified to be true, that you have a ''compelling need.''

The FOIA Officer will notify you within 10 calendar days after receiving the request whether FCA has granted expedited processing. If so, we will process your request as soon as we can. For the purposes of this paragraph, ''compelling need'' means:

(1) Your or someone's life or physical safety may be in danger if processing is not expedited; or

(2) You urgently need to inform the public about actual or alleged Federal government activity as a representative of the news media.

(d) *Request for personal information.* If you or your representative requests your personal information, FCA may require you to submit a notarized request, identify yourself under penalty of perjury, or provide other proof of your identity.

(e) *Fees.* When making a request, you must specify the amount you are willing to pay. You may also want to state your identity and the purpose of your request so FCA can categorize your request for fee purposes.

(f) *Other requests.* To ensure that the public has timely information about FCA activities, the Office of Congressional and Public Affairs will make available copies of public documents, such as FCA's annual report and media advisories.

§ 602.5 FCA response to requests for records.

(a) *Response time.* The FOIA Officer will tell you within 20 business days of receiving your request whether it was granted or denied. If your request is addressed incorrectly, the 20-day response period will not begin until the FOIA Officer actually receives your request (or would have received it with the exercise of due diligence by FCA.)

(b) *Extension of response time.* In ''unusual circumstances,'' the FOIA

Officer may extend the 20-day response time for up to 10 more business days by telling you in writing why an extension is needed and the date a determination should be mailed. As used in this paragraph, ''unusual circumstances'' means the need to:

(1) Search for and collect the requested records from field offices or other separate establishments;

(2) Search for, collect, and review a voluminous amount of records identified in a single request;

(3) Consult with another Federal agency having a substantial interest in the request; or

(4) Consult with two or more FCA offices having a substantial interest in the request.

(c) *Referrals.* If you request records in FCA's possession originated by another Federal agency, we will refer the request to the originating agency and inform you of the referral. If your request should have been addressed to another Federal agency, FCA will refer the request to that agency and so advise you.

§ 602.6 FOIA exemptions.

The FOIA exempts from mandatory disclosure records in these categories:

(a) *Exemption 1.* Records properly and currently classified in the interest of national defense or foreign policy, as specifically authorized under criteria established by an Executive order of the President;

(b) *Exemption 2.* Records related solely to internal personnel rules and FCA practices, including matters that are for the guidance of FCA personnel;

(c) *Exemption 3.* Records that are specifically exempted from disclosure by a statute that permits no discretion on the issue;

(d) *Exemption 4.* Records containing trade secrets and commercial or financial information obtained from any person or organization that is privileged or confidential;

(e) *Exemption 5.* Records containing inter-agency or intra-agency memorandums or letters that would not be available by law to a party (other than a Federal agency) in litigation with FCA;

(f) *Exemption 6.* Personnel and similar files, the disclosure of which would constitute a clearly unwarranted invasion of personal privacy;

(g) *Exemption 7.* Records or information compiled for law enforcement purposes, but only to the extent that the production of such law enforcement records or information:

(1) Could reasonably be expected to interfere with enforcement proceedings;

(2) Would deprive a person of a right to a fair trial or an impartial adjudication;

(3) Could reasonably be expected to constitute an unwarranted invasion of personal privacy;

(4) Could reasonably be expected to disclose the identity of a confidential source, including a State, local, or foreign agency or authority or any private institution that furnished information on a confidential basis, and, in the case of a record or information compiled by a criminal law enforcement authority in the course of a criminal investigation or by a Federal agency conducting a lawful national security intelligence investigation, information furnished by a confidential source;

(5) Would disclose techniques and procedures for law enforcement investigations or prosecutions, or would disclose guidelines for law enforcement investigations or prosecutions if such disclosure could reasonably be expected to risk circumvention of the law; or

(6) Could reasonably be expected to endanger the life or physical safety of any individual;

(h) *Exemption 8.* Records of or related to examination, operation, reports of condition and performance, or reports of or related to Farm Credit System institutions or institutions that are regulated and/or examined by FCA that are prepared by, on behalf of, or for FCA's use; and

(i) *Exemption 9.* Records containing geological and geophysical information and data (including maps) concerning wells.

§ 602.7 Confidential business information.

(a) *In general.* FCA may disclose business information provided to FCA by a business submitter only under this section. This section will not apply if:

(1) FCA determines that the business submitter has no valid basis to object to disclosure;

(2) The information has been published lawfully or otherwise made available to the public; or

(3) Law (other than 5 U.S.C. 552) requires disclosure of the information.

(b) *Notification.* Upon receipt of a request for confidential business information, the FOIA Officer will promptly notify the requester and the business submitter in writing that the responsive records may be exempt from disclosure under 5 U.S.C. 552(b)(4). FCA will give the business submitter a reasonable time to object to the proposed disclosure of the responsive records and so inform the requester whenever:

(1) The business submitter has in good faith designated the information as a trade secret or commercial or financial information that is privileged or confidential. FCA will provide such notice for 10 years after receiving the information unless the business submitter justifies the need for a longer period; or

(2) FCA believes that disclosing the information may result in commercial or financial injury to the business submitter.

(c) *Objection to release.* A business submitter who objects to releasing the requested information should tell FCA in writing why the information is a trade secret or commercial or financial information that is privileged or confidential.

(d) *FCA response.* (1) We will consider carefully a business submitter's objections. If we decide to disclose business information over the submitter's objection, the FOIA Officer in writing will explain to the submitter why we disagreed with the submitter's objection and describe the business information to be disclosed.

(2) We will notify the requester and the submitter at the same time of the proposed disclosure date.

(3) If a submitter sues to prevent release, we will promptly notify the requester and not disclose the business information until after the court's decision.

(4) If a requester sues to compel disclosure, we will promptly notify the business submitter.

§ 602.8 Appeals.

(a) *How to appeal.* You may appeal a total or partial denial of your FOIA request within 30 calendar days of the date of the denial letter. Your appeal must be in writing and addressed to the Director, Office of Resources Management (ORM), Farm Credit Administration, as follows:

(1) By mail to 1501 Farm Credit Drive, McLean, Virginia 22102–5090;

(2) By facsimile to (703) 893–2608; or

(3) By E-mail to foiaappeal@fca.gov.

(b) *FCA action on appeal.* The ORM Director will act upon an appeal within 20 business days of receiving the appeal and will inform you of the determination in writing. If your appeal is improperly addressed, the 20-day time period will not begin until the appeal is received or would have been received with the exercise of due diligence in the Office of the Director, ORM.

(c) *Unusual circumstances.* In ''unusual circumstances,'' as defined in § 602.5(b), the ORM Director may extend the 20-day response time by telling you in writing why an extension is needed and the date a determination

should be mailed. The total of all extensions, including any extension of the response time for the initial request, may not exceed 10 business days.

§ 602.9 Current index.

FCA will make available for public inspection and copying a current index as required by 5 U.S.C. 552(a)(2)(C). Publication of the index in the **Federal Register** is unnecessary and impractical because we rarely receive requests for indexed material. However, we will provide a copy of the index upon request at a cost not to exceed the actual duplication cost.

Subpart C—FOIA Fees

§ 602.10 Definitions.

(a) *Commercial use request* means a request for information on behalf of an individual or entity seeking information for a use or purpose that furthers the commercial, trade, or profit interests of that individual or entity.

(b) *Direct costs* means the costs FCA incurs in searching for and reproducing documents to respond to a FOIA request. For a commercial use request, it also means the costs we incur in reviewing documents to respond to the request. Direct costs include the salary of the employees performing work (the basic rate of pay for the employee plus 16 percent of that rate to cover benefits) and the cost of operating reproduction equipment. They do not include overhead expenses.

(c) *Educational institution* means a preschool, a public or private elementary or secondary school, an institution of undergraduate or graduate higher education, an institution of professional education, or an institution of vocational education that operates a program of scholarly research.

(d) *Noncommercial scientific institution* means an institution operated solely to conduct scientific research that is not intended to promote any particular product or industry and not for a commercial, trade, or profit basis.

(e) *Pages* refers to paper copies sized 8½ x 11 inches or 11 x 14 inches.

(f) *Representative of the news media* means any person actively gathering news for an entity that is organized and operated to publish or broadcast news to the public. ''News'' means information that is about current events or that would be of current interest to the public.

(g) *Reproduce and reproduction* means making a copy of a record to respond to a FOIA request by paper copy, microfilm, audiovisual materials, or machine readable documentation, magnetic tape, or disk.

(h) *Review* means the process of examining documents located in response to a FOIA request to determine whether any portion should be withheld. It does not include the time spent resolving legal or policy issues.

(i) *Search* means all time spent looking for material responsive to a FOIA request, including page-by-page or line-by-line identification of material within documents.

§ 602.11 Fees by type of requestor.

Depending on your identity and the purpose of your request, the FCA may charge you the direct costs of searching for responsive records, reviewing the records, and reproducing them. If necessary, we will seek clarification before categorizing the request.

(a) *Educational institutions and noncommercial scientific institutions.* FCA charges fees for reproduction costs only. The first 100 pages are free. You must show that the request is authorized by an educational or noncommercial scientific institution and that the records are sought to further scholarly or scientific research and are not for a commercial use.

(b) *Representatives of the news media.* FCA charges fees for reproduction costs only. The first 100 pages are free. You must be a representative of the news media, and the request must not be made for a commercial use. A request for records supporting news dissemination is not a request for a commercial use.

(c) *Commercial use.* FCA charges the direct cost for search, review, and reproduction. Commercial use requesters are not entitled to free search time or free reproduction. You will be charged even if no records are disclosed.

(d) *All others.* The first 2 hours of search time and the first 100 pages of reproduction are free. Thereafter, FCA will charge you search and reproduction costs. You will be charged for a search even if no records are disclosed.

§ 602.12 Fees.

(a) FCA may charge:

(1) For manual searches for records and for review, the salary rate (i.e., basic pay plus 16 percent) of the employees.

(2) For computer searches for records, the direct costs of computer search time including the cost of special supplies or materials.

(3) For each page made by photocopy or similar process, fifteen cents per page and for other copy forms, the direct costs.

(4) The direct costs of elective services, such as certifying records as true copies or sending records by special methods.

(b) We will not charge fees when total assessed fees are less than $15.00.

(c) You must pay by personal check, bank draft drawn on a United States bank, or postal money order made payable to the Treasury of the United States.

(d) A request about yourself is treated under Privacy Act fee provisions.

§ 602.13 Fee waiver.

FCA may waive or reduce fees if we determine that disclosure is in the public interest because it will advance public understanding of the government's operations or activities, and it is not primarily in your commercial interest.

§ 602.14 Advance payments—notice.

(a) If fees will be more than $25.00 and you have not indicated in advance that you will pay estimated fees, FCA will notify you of the amount of estimated fees and ask that you agree to pay them. Except as noted in this section, we will begin processing the FOIA request upon receiving your agreement to pay.

(b) If estimated fees exceed $250.00 and you have a history of promptly paying fees charged for information requests, we may process your request based on your agreement to pay the estimated fees.

(c) If the estimated fees exceed $250.00 and you have no history of paying fees charged for information requests, FCA may require you to pay the estimated fees in advance.

(d) If you have previously failed to pay fees for information requests or paid them late, you must pay any fees still owed, plus interest, and the estimated fees before we will process a new or a pending request.

(e) If we require advance payment or your agreement in advance to pay fees, we will not consider the request to be received and will not process it until you meet the requirement.

§ 602.15 Interest on unpaid fees.

If you have failed to pay fees on time, FCA may charge you interest starting on the 31st calendar day following the date we bill you. Interest will accrue at the rate prescribed in section 3717 of title 31, United States Code, starting on the day the bill was sent.

§ 602.16 Aggregating requests.

You may not file multiple requests at the same time solely to avoid paying fees. When FCA reasonably believes that you, or a group acting together, is attempting to break a request down into a series of requests to avoid fees, we will

aggregate the requests and charge accordingly. We will assume that multiple requests of this type made within a 30-day period have been made to avoid fees. Where requests are separated by a longer period, we will aggregate the requests only when we determine there is a basis for aggregation.

Subpart D—Testimony and Production of Documents in Legal Proceedings in Which FCA Is Not a Named Party

§ 602.17 Policy.

(a) The rules in this subpart maintain the confidentiality of FCA's documents and information, conserve FCA employees' time for official duties, maintain FCA's impartiality in litigation, and authorize the FCA Chairman to determine when to permit testimony and to produce documents. This subpart does not affect access to documents under the FOIA or the Privacy Act. *See* subpart B of this part and part 603 of this chapter.

(b) Generally, FCA will not voluntarily produce documents and FCA employees will not appear voluntarily as witnesses in any legal proceeding. However, in limited circumstances, the FCA Chairman may permit the production of documents or testimony when the Chairman determines it would be in the best interest of FCA or the public. The Chairman may delegate this authority. All privileged documents made available under this subpart remain FCA property. Any employee in possession of information or privileged documents may disclose them only as authorized by the Chairman.

§ 602.18 Definitions.

(a) *Court* means any entity conducting a legal proceeding.

(b) *Demand* means any order, subpoena, or other legal process for testimony or documents.

(c) *Direct costs* means the costs FCA incurs in searching for, reviewing, and reproducing documents to respond to a request. Direct costs include the salary of employees performing work (the basic rate of pay for the employee plus 16 percent of that rate to cover benefits) and the cost of operating reproduction equipment.

(d) *Document* means any record or other documentary materials, such as books, papers, maps, photographs, and machine readable materials, regardless of physical form or characteristics (e.g., electronic form or format) in FCA's possession and control at the time of the request.

(e) *Employee* means any FCA employee or former employee, any FCA Board member or former Board member, any former Federal Farm Credit Board member, any present or former FCA-appointed receiver or conservator, or any agent or independent contractor presently or formerly acting on behalf of FCA even if the appointment or contract has terminated.

(f) *FCA Counsel* means the General Counsel, a Department of Justice attorney, or counsel authorized by FCA to act on behalf of FCA or an employee.

(g) *General Counsel* means the General Counsel of FCA or the General Counsel's designee.

(h) *Legal proceeding* means any administrative, civil, or criminal proceeding, including a discovery proceeding, before a court when FCA is not a named party or when FCA has not instituted the legal proceeding.

§ 602.19 Request for testimony or production of documents.

How to make and address a request. Your request for an FCA employee's testimony about official matters or the production of FCA documents must be in writing and addressed to the FCA General Counsel, 1501 Farm Credit Drive, McLean, Virginia 22102–5090.

(a) Your request must contain the following:

(1) Title of the case;

(2) Forum;

(3) Your interest in the case;

(4) Summary of the litigation issues;

(5) Reasons for the request;

(6) Why the confidential information is important; and

(7) An explanation of why the desired testimony or document is not reasonably available from another source. If testimony is requested, you must also state how you intend to use the testimony, provide a summary of the testimony requested, and explain why a document could not be used instead of testimony.

(b) The General Counsel may ask you to consider limiting your request to make it less burdensome or to provide information necessary to determine if providing documents or testimony would be in the public interest.

§ 602.20 Testimony of FCA employees.

(a) An FCA employee may testify only as permitted by the FCA Chairman's written authorization. Generally, an employee may testify only by deposition or written interrogatory. An employee may give only factual testimony and may not give opinion testimony.

(b) If, in response to your request, the Chairman determines that an employee may testify, you must serve the employee with a subpoena under applicable Federal or State rules of procedure and simultaneously send a copy of the subpoena by registered mail to the General Counsel.

(c) Normally, depositions will be taken at the employee's office, at a time convenient to the employee and the office. FCA counsel may represent FCA's interests at the deposition.

(d) If you request the deposition, you must provide the General Counsel a copy of the deposition transcript at no charge.

§ 602.21 Production of FCA documents.

(a) An FCA employee may produce FCA documents only as permitted by the FCA Chairman.

(b) Before FCA will release any documents, the requesting party must obtain an acceptable protective order from the court before which the action is pending that will preserve the confidentiality of the documents to be released.

(c) Upon request, we may provide certified or authenticated copies of FCA documents.

§ 602.22 Fees.

(a) For documents released under this subpart, FCA will charge:

(1) The direct costs of searching for responsive records, including the use of a computer, reviewing the records, and reproducing them. We will charge for the direct cost of other services and materials not identified in this section.

(2) Fifteen cents per copy for each page made by photocopy or similar process.

(3) The direct costs for each certification or authentication of documents.

(b) You must pay by personal check, bank draft drawn on a United States bank, or postal money order made payable to FCA. We will waive fees of $15.00 or less. We will forward the documents after we receive your payment.

§ 602.23 Responses to demands served on FCA employees.

(a) An FCA employee served with a demand or a subpoena in a legal proceeding must immediately notify the General Counsel of such service, of the desired testimony or documents, and of all relevant facts.

(b) When the FCA Chairman does not permit testimony or production of documents, FCA counsel will provide the regulations in this subpart to the party or court issuing the demand and explain that the employee may not testify or produce documents without the Chairman's prior approval.

(c) If the court rules that the employee must comply with the demand regardless of the Chairman's instructions not to do so, the employee must respectfully refuse to comply.

(d) FCA's determination under this subpart to comply or not to comply with any demand will not be a waiver or an assertion of privilege, or an objection based on relevance, technical deficiency, or any other ground. We may oppose any demand on any legal ground.

§ 602.24 Responses to demands served on non-FCA employees or entities.

If you are not an FCA employee as defined in § 602.18(e) and are served with a demand or a subpoena in a legal proceeding directing you to produce or testify about an FCA report of examination, other document generated or adopted by FCA, or any related document, you must object and immediately notify the General Counsel of such service, the testimony and documents described in the demand, and all relevant facts. You must also object to the production of the documents on the basis that the documents are FCA's property and cannot be released without FCA's consent. You should inform the requester that the production of documents or testimony must follow the procedures in this part.

Subpart E—Release of Records in Public Rulemaking Files

§ 602.25 General.

FCA compiles a public rulemaking file for each regulation. You may obtain documents in the public rulemaking file by sending a written request to the Director, Regulation and Policy Division, Office of Policy and Analysis, Farm Credit Administration, 1501 Farm Credit Drive, McLean, Virginia 22102–5090. We will charge fifteen cents per copy for each page made by photocopy or similar process. If the requested records are maintained in an electronic format, we will charge for the actual reproduction costs. We will waive fees of $15.00 or less.

Dated: March 2, 1999.

Vivian L. Portis,

Secretary, Farm Credit Administration Board.

[FR Doc. 99–5550 Filed 3–5–99; 8:45 am]

BILLING CODE 6705–01–P

DEPARTMENT OF TRANSPORTATION

Federal Aviation Administration

14 CFR Part 39

[Docket No. 98–NM–326–AD]

RIN 2120–AA64

Airworthiness Directives; McDonnell Douglas Model DC–9–80 Series Airplanes and Model MD–88 Airplanes

AGENCY: Federal Aviation Administration, DOT.

ACTION: Notice of proposed rulemaking (NPRM).

SUMMARY: This document proposes the supersedure of an existing airworthiness directive (AD), applicable to all McDonnell Douglas Model DC–9–80 series airplanes and Model MD–88 airplanes. That AD currently requires a revision to the Airplane Flight Manual (AFM) to specify restrictions on operations during icing conditions, and installation of tufts and triangular decals on the inboard side of the wing upper surfaces, and a revision to the AFM to specify restrictions on operations when such tufts or decals are missing. This action would require installation of an overwing heater blanket system or a primary wing ice detection system, and a new revision to the AFM to advise the flightcrew of the hazards associated with ice accumulation on wing surfaces. This proposal is prompted by incidents in which ice accumulation on the wing upper surfaces shed into the engines during takeoff. The actions specified by the proposed AD are intended to prevent such ice accumulation, which could result in ingestion of ice into one or both engines and consequent loss of thrust from one or both engines.

DATES: Comments must be received by April 22, 1999.

ADDRESSES: Submit comments in triplicate to the Federal Aviation Administration (FAA), Transport Airplane Directorate, ANM–114, Attention: Rules Docket No. 98-NM–326–AD, 1601 Lind Avenue, SW., Renton, Washington 98055–4056. Comments may be inspected at this location between 9:00 a.m. and 3:00 p.m., Monday through Friday, except Federal holidays.

The service information referenced in the proposed rule may be obtained from The Boeing Company, Douglas Products Division, 3855 Lakewood Boulevard, Long Beach, California 90846, Attention: Technical Publications Business Administration, Dept. C1–L51 (2–60). This information may be examined at the FAA, Transport Airplane Directorate, 1601 Lind Avenue, SW., Renton, Washington; or at the FAA, Transport Airplane Directorate, Los Angeles Aircraft Certification Office, 3960 Paramount Boulevard, Lakewood, California.

FOR FURTHER INFORMATION CONTACT: Albert Lam, Aerospace Engineer, Systems and Equipment Branch, ANM–130L, FAA, Transport Airplane Directorate, Los Angeles Aircraft Certification Office, 3960 Paramount Boulevard, Lakewood, California 90712–4137; telephone (562) 627–5346; fax (562) 627–5210.

SUPPLEMENTARY INFORMATION:

Comments Invited

Interested persons are invited to participate in the making of the proposed rule by submitting such written data, views, or arguments as they may desire. Communications shall identify the Rules Docket number and be submitted in triplicate to the address specified above. All communications received on or before the closing date for comments, specified above, will be considered before taking action on the proposed rule. The proposals contained in this notice may be changed in light of the comments received.

Comments are specifically invited on the overall regulatory, economic, environmental, and energy aspects of the proposed rule. All comments submitted will be available, both before and after the closing date for comments, in the Rules Docket for examination by interested persons. A report summarizing each FAA-public contact concerned with the substance of this proposal will be filed in the Rules Docket.

Commenters wishing the FAA to acknowledge receipt of their comments submitted in response to this notice must submit a self-addressed, stamped postcard on which the following statement is made: ''Comments to Docket Number 98–NM–326–AD.'' The postcard will be date stamped and returned to the commenter.

Availability of NPRMs

Any person may obtain a copy of this NPRM by submitting a request to the FAA, Transport Airplane Directorate, ANM–114, Attention: Rules Docket No. 98–NM–326–AD, 1601 Lind Avenue, SW., Renton, Washington 98055–4056.

Discussion

On January 3, 1992, the FAA issued AD 92–03–02, amendment 39–8156 (57 FR 2014, January 17, 1992), applicable to all McDonnell Douglas Model DC–9–80 series airplanes and Model MD–88 airplanes, to require a revision to the

FAA-approved Airplane Flight Manual (AFM) to specify that takeoff may not be initiated unless the flightcrew verifies that visual and physical checks of the wing upper surfaces have been accomplished, and that the wing is clear of ice accumulation. That AD also requires installation of tufts and triangular decals on the inboard side of wing upper surfaces. That action was prompted by several incidents in which ice build-up on wing upper surfaces may have shed into the engines during takeoff, causing damage to one or both engines. The requirements of that AD are intended to prevent such ice build-up, which, if not corrected, could result in loss of thrust from one or both engines.

Actions Since Issuance of Previous Rule

Since the issuance of that AD, several incidents occurred in which ice that had accumulated on the wing upper surfaces shed during takeoff and was ingested into an engine, which resulted in damage to the engine. In those incidents, the wings of the airplanes reportedly had been subjected to visual and physical checks to detect ice accumulation on the wing upper surfaces, in accordance with the AFM revision required by AD 92–03–02. Reportedly, no ice was detected during those inspections.

In the preamble to AD 92–03–02, the FAA indicated that the actions required by that AD were considered ''interim action'' and that further rulemaking action was being considered. The FAA finds that the physical and visual checks to detect ice accumulation, as specified by the AFM revision required by AD 92–03–02, may not be adequate to ensure the safety of the affected transport airplane fleet. Therefore, the FAA has determined that further rulemaking action is indeed necessary, and this proposed AD follows from that determination.

Explanation of Relevant Service Information

The FAA has reviewed and approved McDonnell Douglas Service Bulletins MD80–30–071, Revision 02, dated February 6, 1996; and MD80–30–078, Revision 01, dated April 8, 1997. Those service bulletins describe procedures for installation of an overwing heater blanket system. The procedures include installation of an overwing heater blanket assembly on each wing; a heater control unit in the mid cargo compartment; and associated system wiring, circuit breakers, and cockpit switches. For certain airplanes (Group 3), service bulletin MD80–30–071, Revision 02, also describes procedures for removal of the overwing ice detector system from the wing upper surfaces. Accomplishment of the actions specified in the applicable service bulletin is intended to adequately address the identified unsafe condition.

Explanation of Requirements of Proposed Rule

Since an unsafe condition has been identified that is likely to exist or develop on other products of this same type design, the proposed AD would supersede AD 92–03–02 to continue to require a revision to the AFM to specify that takeoff may not be initiated unless the flightcrew verifies that visual and physical checks of the wing upper surfaces have been accomplished, and that the wing is clear of ice accumulation. The proposed AD also would continue to require installation of tufts and triangular decals on the inboard side of the wing upper surfaces, and a revision to the Configuration Deviation List (CDL) appendix of the AFM to specify restrictions on operations when such tufts and decals are not present. In addition, the proposed AD would require installation of an overwing heater blanket system or a primary wing ice detection system, and a new revision to the AFM to advise the flightcrew of the hazards associated with ice accumulation on wing surfaces. After accomplishment of the installation and insertion of the new revision into the AFM, the AFM revision that specifies visual and physical inspections to detect ice accumulation on the wing may be removed from the AFM, and the tufts and triangular decals may be removed from the airplane.

Installation of an overwing heater blanket system, if accomplished, would be required to be accomplished in accordance with the applicable service bulletin described previously, except as discussed below; or in accordance with certain Supplemental Type Certificates identified in the proposed rule. Installation of a primary wing ice detection system, if accomplished, would be required to be accomplished in accordance with a method approved by the FAA.

Differences Between Proposed Rule and Service Bulletins

McDonnell Douglas Service Bulletins MD80–30–071, Revision 02, dated February 6, 1996, and MD80–30–078, Revision 01, dated April 8, 1997, describe procedures for installation of an overwing heater blanket system. Operators should note that this AD proposes to mandate, within 3 years, the installation of an overwing heater blanket system or a primary wing ice detection system. Installation of an overwing heater blanket system is classified as optional in the service bulletins.

The FAA has determined that long-term continued operational safety will be better assured by design changes to remove the source of the problem, rather than by repetitive inspections. Long-term inspections may not be providing the degree of safety assurance necessary for the transport airplane fleet. This, coupled with a better understanding of the human factors associated with numerous continual inspections, has led the FAA to consider placing less emphasis on inspections and more emphasis on design improvements. The proposed installation is in consonance with these conditions.

Cost Impact

There are approximately 1,153 airplanes of the affected design in the worldwide fleet. The FAA estimates that 643 airplanes of U.S. registry would be affected by this proposed AD.

The AFM revision that is currently required by AD 92–03–02 takes approximately 1 work hour per airplane to accomplish, at an average labor rate of $60 per work hour. Based on these figures, the cost impact of the currently required AFM revision on U.S. operators is estimated to be $38,580, or $60 per airplane.

The revision of the CDL that is currently required by AD 92–03–02 takes approximately 1 work hour per airplane to accomplish, at an average labor rate of $60 per work hour. Based on these figures, the cost impact of the CDL revision on U.S. operators is estimated to be $38,580, or $60 per airplane.

The installation of tufts and decals that is currently required by AD 92–03–02 takes approximately 3 work hours per airplane to accomplish, at an average labor rate of $60 per work hour. Required parts cost approximately $25 per airplane. Based on these figures, the cost impact of the currently required installation of tufts and decals on U.S. operators is estimated to be $131,815, or $205 per airplane.

The installation of the wing heater system that is proposed as one option for compliance with this AD action would take approximately 254 work hours per airplane to accomplish, at an average labor rate of $60 per work hour. Required parts would cost approximately $62,166 per airplane. Based on these figures, the cost impact of the installation proposed by this AD on U.S. operators is estimated to be $77,406 per airplane.

In lieu of installation of a wing heater system, this proposed AD provides for installation of a primary wing ice detector system. Because the manufacturer has not issued service information that describes the procedures for such an installation, the FAA is unable at this time to provide specific information as to the number of work hours or cost of parts that would be required to accomplish that proposed installation. However, based on estimated costs provided by the manufacturer, the FAA can reasonably estimate that the proposed installation would require 200 work hours to accomplish, at an average labor rate of $60 per work hour. The cost of required parts is estimated to be $31,341 per airplane. Based on these figures, the cost impact of the installation of a primary wing ice detector system proposed by this AD on U.S. operators is estimated to be $43,341 per airplane.

The new AFM revision that is proposed in this AD action would take approximately 1 work hour per airplane to accomplish, at an average labor rate of $60 per work hour. Based on these figures, the cost impact of the new AFM revision proposed by this AD on U.S. operators is estimated to be $38,580, or $60 per airplane.

The cost impact figures discussed above are based on assumptions that no operator has yet accomplished any of the current or proposed requirements of this AD action, and that no operator would accomplish those actions in the future if this AD were not adopted.

Regulatory Impact

The regulations proposed herein would not have substantial direct effects on the States, on the relationship between the national government and the States, or on the distribution of power and responsibilities among the various levels of government. Therefore, in accordance with Executive Order 12612, it is determined that this proposal would not have sufficient federalism implications to warrant the preparation of a Federalism Assessment.

For the reasons discussed above, I certify that this proposed regulation (1) is not a ''significant regulatory action'' under Executive Order 12866; (2) is not a ''significant rule'' under the DOT Regulatory Policies and Procedures (44 FR 11034, February 26, 1979); and (3) if promulgated, will not have a significant economic impact, positive or negative, on a substantial number of small entities under the criteria of the Regulatory Flexibility Act. A copy of the draft regulatory evaluation prepared for this action is contained in the Rules Docket. A copy of it may be obtained by contacting the Rules Docket at the location provided under the caption **ADDRESSES**.

List of Subjects in 14 CFR Part 39

Air transportation, Aircraft, Aviation safety, Safety.

The Proposed Amendment

Accordingly, pursuant to the authority delegated to me by the Administrator, the Federal Aviation Administration proposes to amend part 39 of the Federal Aviation Regulations (14 CFR part 39) as follows:

PART 39—AIRWORTHINESS DIRECTIVES

1. The authority citation for part 39 continues to read as follows:

Authority: 49 U.S.C. 106(g), 40113, 44701.

§ 39.13 [Amended]

2. Section 39.13 is amended by removing amendment 39–8156 (57 FR 2014, January 17, 1992), and by adding a new airworthiness directive (AD), to read as follows:

McDonnell Douglas: Docket 98–NM–326–AD. Supersedes AD 92–03–02, Amendment 39–8156.

Applicability: All Model DC–9–81, –82, –83, and –87 series airplanes; and Model MD–88 airplanes; certificated in any category.

Note 1: This AD applies to each airplane identified in the preceding applicability provision, regardless of whether it has been modified, altered, or repaired in the area subject to the requirements of this AD. For airplanes that have been modified, altered, or repaired so that the performance of the requirements of this AD is affected, the owner/operator must request approval for an alternative method of compliance in accordance with paragraph (f)(1) of this AD. The request should include an assessment of the effect of the modification, alteration, or repair on the unsafe condition addressed by this AD; and, if the unsafe condition has not been eliminated, the request should include specific proposed actions to address it.

Compliance: Required as indicated, unless accomplished previously.

To prevent ice accumulation on the wing upper surfaces, which could result in ingestion of ice into one or both engines and consequent loss of thrust from one or both engines, accomplish the following:

Restatement of Requirements of AD 92–03–02

(a) Within 10 days after January 17, 1992 (the effective date of AD 92–03–02, amendment 39–8156), revise the Limitations Section of the FAA-approved Airplane Flight Manual (AFM) to include the following. This may be accomplished by inserting a copy of this AD in the AFM.

''Ice on Wing Upper Surfaces

Caution

Ice shedding from the wing upper surface during takeoff can cause severe damage to one or both engines, leading to surge, vibration, and complete thrust loss. The formation of ice can occur on wing surfaces during exposure of the airplane to normal icing conditions. Clear ice can also occur on the wing upper surfaces when cold-soaked fuel is in the main wing fuel tanks, and the airplane is exposed to conditions of high humidity, rain, drizzle, or fog at ambient temperatures well above freezing. Often, the ice accumulation is clear and difficult to detect visually. The ice forms most frequently on the inboard, aft corner of the main wing tanks. [END OF CAUTIONARY NOTE]

The wing upper surfaces must be physically checked for ice when the airplane has been exposed to conditions conducive to ice formation. Takeoff may not be initiated unless the flight crew verifies that a visual check and a physical (hands-on) check of the wing upper surfaces have been accomplished, and that the wing is clear of ice accumulation when any of the following conditions occur:

(1) When the ambient temperature is less than 50 degrees F and high humidity or visible moisture (rain, drizzle, sleet, snow, fog, etc.) is present;

(2) When frost or ice is present on the lower surface of either wing;

(3) After completion of de-icing.

When tufts and triangular decals are installed in accordance with McDonnell Douglas MD–80 Service Bulletin 30–59, the physical check may be made by assuring that all installed tufts move freely.

Note

This limitation does not relieve the requirement that aircraft surfaces are free of frost, snow, and ice accumulation, as required by Federal Aviation Regulations Sections 91.527 and 121.629. [END OF NOTE]''

(b) Within 10 days after January 17, 1992, revise the Configuration Deviation List (CDL) Appendix of the FAA-approved AFM to include the following. This may be accomplished by inserting a copy of this AD in the AFM.

''30–80–01 Triangular Decal and Tuft Assemblies

Up to two (2) decals or tufts per side may be missing, provided:

(a) At least one decal and tuft on each side is located along the aft spar line; and

(b) The tufts are used for performing the physical check to determine that the upper wing is free of ice by observing that the tufts move freely.

Up to eight (8) decals and/or tufts may be missing, provided:

(a) Takeoff may not be initiated unless the flight crew verifies that a physical (hands-on) check is made of the upper wing in the location of the missing decals and/or tufts to assure that there is no ice on the wing when icing conditions exist; OR

(b) When the ambient temperature is more than 50 degrees F.''

(c) Within 30 days after January 17, 1992, install tufts and triangular decals on the inboard side of the wings' upper surfaces, in accordance with McDonnell Douglas Service Bulletin 30–59, dated September 18, 1989; Revision 1, dated January 5, 1990; or Revision 2, dated August 15, 1990.

New Requirements of This AD

Corrective Actions

(d) Within 3 years after the effective date of this AD, accomplish the requirements of either paragraph (d)(1) or (d)(2) of this AD.

(1) Install an overwing heater blanket system in accordance with McDonnell Douglas Service Bulletin MD80–30–071, Revision 02, dated February 6, 1996, or McDonnell Douglas Service Bulletin MD80–30–078, Revision 01, dated April 8, 1997, as applicable; or in accordance with Supplemental Type Certificate (STC) SA6042NM or STC SA6061NM.

(2) Install an FAA-approved primary wing ice detection system in accordance with a method approved by the Manager, Los Angeles Aircraft Certification Office (ACO), FAA, Transport Airplane Directorate.

Note 2: McDonnell Douglas has received FAA approval of an acceptable primary wing ice detection system. This modification has been assigned a McDonnell Douglas service bulletin number but, at this time, no service bulletin is available.

AFM Revision

(e) Prior to further flight after accomplishment of the installation required by paragraph (d)(1) or (d)(2) of this AD, revise the Limitations Section of the FAA-approved AFM to include the following. This may be accomplished by inserting a copy of this AD in the AFM. After accomplishment of the installation required by paragraph (d) of this AD and this AFM revision, the AFM revisions required by paragraphs (a) and (b) of this AD may be removed from the AFM, and the tufts and triangular decals required by paragraph (c) of this AD may be removed from the airplane.

"Ice on Wing Upper Surfaces

Caution

Ice shedding from the wing upper surface during takeoff can cause severe damage to one or both engines, leading to surge, vibration, and complete thrust loss. The formation of ice can occur on wing surfaces during exposure of the airplane to normal icing conditions. Clear ice can also occur on the wing upper surfaces when cold-soaked fuel is in the main wing fuel tanks, and the airplane is exposed to conditions of high humidity, rain, drizzle, or fog at ambient temperatures well above freezing. Often, the ice accumulation is clear and difficult to detect visually. The ice forms most frequently on the inboard, aft corner of the main wing tanks. [END OF CAUTIONARY NOTE]

Alternative Methods of Compliance

(f)(1) An alternative method of compliance or adjustment of the compliance time that provides an acceptable level of safety may be used if approved by the Manager, Los Angeles ACO. Operators shall submit their requests through an appropriate FAA Principal Maintenance Inspector, who may add comments and then send it to the Manager, Los Angeles ACO.

(2) Alternative methods of compliance, approved previously in accordance with AD 92–03–02, amendment 39–8156, are approved as alternative methods of compliance with this AD.

Note 3: Information concerning the existence of approved alternative methods of compliance with this AD, if any, may be obtained from the Los Angeles ACO.

Special Flight Permits

(g) Special flight permits may be issued in accordance with sections 21.197 and 21.199 of the Federal Aviation Regulations (14 CFR 21.197 and 21.199) to operate the airplane to a location where the requirements of this AD can be accomplished.

Issued in Renton, Washington, on March 1, 1999.

Darrell M. Pederson,

Acting Manager, Transport Airplane Directorate, Aircraft Certification Service.

[FR Doc. 99–5549 Filed 3–5–99; 8:45 am]

BILLING CODE 4910–13–U

DEPARTMENT OF TRANSPORTATION

Federal Aviation Administration

14 CFR Part 71

[Airspace Docket No. 97–ASO–18]

Proposed Realignment and Establishment of VOR Federal Airways; KY and TN

AGENCY: Federal Aviation Administration (FAA), DOT.

ACTION: Notice of proposed rulemaking.

SUMMARY: This notice proposes to realign Federal Airway V–517 in the vicinity of Snowbird, TN, and to establish two Federal airways, V–347 between London, KY, and Hinch Mountain, TN, and V–384 between Livingston, TN, and Volunteer, TN. This action would improve navigational routings and enhance service for users, and provide for the more efficient handling of air traffic between the Indianapolis and the Atlanta Air Route Traffic Control Centers' (ARTCC) airspace.

DATES: Comments must be received on or before April 22, 1999.

ADDRESSES: Send comments on the proposal in triplicate to: Manager, Air Traffic Division, ASO–500, Docket No. 97–ASO–18, Federal Aviation Administration, P.O. Box 20636, Atlanta, GA 30320. The official docket may be examined in the Rules Docket, Office of the Chief Counsel, Room 916, 800 Independence Avenue, SW., Washington, DC, weekdays, except Federal holidays, between 8:30 a.m. and 5:00 p.m.

An informal docket may also be examined during normal business hours at the office of the Regional Air Traffic Division.

FOR FURTHER INFORMATION CONTACT: Paul Gallant, Airspace and Rules Division, ATA–400, Office of Air Traffic Airspace Management, Federal Aviation Administration, 800 Independence Avenue, SW., Washington, DC 20591; telephone: (202) 267–8783.

SUPPLEMENTARY INFORMATION:

Comments Invited

Interested parties are invited to participate in this proposed rulemaking by submitting such written data, views, or arguments as they may desire. Comments that provide the factual basis supporting the views and suggestions presented are particularly helpful in developing reasoned regulatory decisions on the proposal. Comments are specifically invited on the overall regulatory, aeronautical, economic, environmental, and energy-related aspects of the proposal.

Communications should identify the airspace docket number and be submitted in triplicate to the address listed above. Commenters wishing the FAA to acknowledge receipt of their comments on this notice must submit with those comments a self-addressed, stamped postcard on which the following statement is made: "Comments to Airspace Docket No. 97–ASO–18." The postcard will be date/time stamped and returned to the commenter. All communications received on or before the specified closing date for comments will be considered before taking action on the proposed rule. The proposal contained in this notice may be changed in light of comments received. All comments submitted will be available for examination in the Rules Docket both before and after the closing date for comments. A report summarizing each substantive public contact with FAA personnel concerned with this rulemaking will be filed in the docket.

Availability of NPRM's

An electronic copy of this document may be downloaded, using a modem and suitable software, from the FAA regulations section of the Fedworld electronic bulletin board service (telephone: 703–321–3339) or the Federal Register's electronic bulletin board service (telephone: 202–512–1661). Internet users may reach the Federal Register's web page at http://www.access.gpo.gov/nara/index.html

for access to recently published rulemaking documents.

Any person may obtain a copy of this Notice of Proposed Rulemaking (NPRM) by submitting a request to the Federal Aviation Administration, Office of Air Traffic Airspace Management, ATA–400, 800 Independence Avenue, SW., Washington, DC 20591, or by calling (202) 267–8783. Communications must identify the notice number of this NPRM. Persons interested in being placed on a mailing list for future NPRM's should call the FAA's Office of Rulemaking, (202) 267–9677, for a copy of Advisory Circular No. 11–2A, Notice of Proposed Rulemaking Distribution System, which describes the application procedure.

The Proposal

The FAA is proposing an amendment to 14 CFR part 71 to realign V–517 in the vicinity of Snowbird, TN, by changing the origination point of the airway from the Volunteer, TN, Very High Frequency Omnidirectional Range/Tactical Air Navigation (VORTAC) station, to the Snowbird, TN, VORTAC. Currently, V–517 extends from Volunteer, through the Miami Intersection, to London, KY, which is not a direct route. However, a direct route between Volunteer and London does exist via V–97. On the other hand, there is currently no published direct route between Snowbird and London. This amendment would enhance the flow of air traffic by realigning V–517 so as to provide a direct route between Snowbird and London. This change would better accommodate northwest-southeast-bound traffic in that area.

The FAA further proposes to establish two Federal airways in the Kentucky-Tennessee area: V–347 between London, KY, and Hinch Mountain, TN; and V–384 between Livingston, TN, and Volunteer, TN. These new airways would provide direct routes between the affected navigation facilities which would match known traffic flows, simplify flight plan filing, and reduce ATC communications requirements, thus resulting in enhanced service for users. These additional airways would also provide air traffic controllers with more nonradar routes between Indianapolis ARTCC and Atlanta ARTCC airspace, thereby facilitating the efficient handling of nonradar-routed traffic between the two ARTCC's.

Domestic VOR Federal airways are published in paragraph 6010(a) of FAA Order 7400.9F dated September 10, 1998, and effective September 16, 1998, which is incorporated by reference in 14 CFR 71.1. The airways listed in this document would be published subsequently in the Order.

The FAA has determined that this proposed regulation only involves an established body of technical regulations for which frequent and routine amendments are necessary to keep them operationally current. Therefore, this proposed regulation: (1) is not a ''significant regulatory action'' under Executive Order 12866; (2) is not a ''significant rule'' under DOT Regulatory Policies and Procedures (44 FR 11034; February 26, 1979); and (3) does not warrant preparation of a Regulatory Evaluation as the anticipated impact is so minimal. Since this is a routine matter that will only affect air traffic procedures and air navigation, it is certified that this proposed rule, when promulgated, will not have a significant economic impact on a substantial number of small entities under the criteria of the Regulatory Flexibility Act.

List of Subjects in 14 CFR Part 71

Airspace, Incorporation by reference, Navigation (air).

The Proposed Amendment

In consideration of the foregoing, the Federal Aviation Administration proposes to amend part 71 of the Federal Aviation Regulations (14 CFR part 71) as follows:

PART 71—[AMENDED]

1. The authority citation for part 71 continues to read as follows:

Authority: 49 U.S.C. 106(g), 40103, 40113, 40120; E.O. 10854, 24 FR 9565, 3 CFR, 1959–1963 Comp., p. 389.

§ 71.1 [Amended]

2. The incorporation by reference in 14 CFR 71.1 of the Federal Aviation Administration Order 7400.9F, Airspace Designations and Reporting Points, dated September 10, 1998, and effective September 16, 1998, is amended as follows:

Paragraph 6010(a)—Domestic VOR Federal Airways

* * * * *

V–347 [New]

From London, KY; to Hinch Mountain, TN.

* * * * *

V–384 [New]

From Livingston, TN; INT Livingston 121°T(123°M) and Volunteer, TN, 307°T(310°M) radials; to Volunteer.

* * * * *

V–517 [Revised]

From Snowbird, TN; INT Snowbird 329°T(333°M) and London, KY, 141°T(144°M) radials; London; INT London 004° and Falmouth, KY, 164° radials; Falmouth; Cincinnati, OH; INT Cincinnati 336° and Richmond, IN, 190° radials; Richmond; to Dayton, OH.

* * * * *

Issued in Washington, DC, on February 26, 1999.

Reginald C. Matthews,

Acting Program Director for Air Traffic Airspace Management.

[FR Doc. 99–5609 Filed 3–5–99; 8:45 am]

BILLING CODE 4910–13–P

CONSUMER PRODUCT SAFETY COMMISSION

16 CFR Parts 1615 and 1616

Amendments of Children's Sleepwear Standards; Possible Revocation; Public Hearing

AGENCY: Consumer Product Safety Commission.

ACTION: Proposed revocation of amendments; public hearing.

SUMMARY: The Commission will conduct a public hearing to receive views from all interested parties about its proposed revocation of the amendments of the children's sleepwear flammability standards. Oral presentations concerning the Commission's proposed revocation will become part of the public record.

DATES: The hearing will begin at 10 a.m. on April 22, 1999. Requests from members of the public desiring to make oral presentations must be received by the Office of the Secretary no later than April 8, 1999. Persons desiring to make oral presentations at this hearing must submit a written text of their presentations no later than April 15, 1999.

ADDRESSES: The hearing will be in room 420 of the East-West Towers Building, 4330 East-West Highway, Bethesda, Maryland 20814. Requests to make oral presentations, and texts of oral presentations should be captioned ''Proposed Revocation of Children's Sleepwear Amendments'' and mailed to the Office of the Secretary, Consumer Product Safety Commission, Washington, DC 20207, or delivered to that office, room 502, 4330 East-West Highway, Bethesda, Maryland 20814. Requests and texts of oral presentations may also be filed by telefacsimile to (301) 504–0127 or by e-mail to cpsc-os@cpsc.gov.

FOR FURTHER INFORMATION CONTACT: For information about the hearing or to request an opportunity to make an oral presentation, call or write Rockelle Hammond, Office of the Secretary,

Consumer Product Safety Commission, Washington, DC 20207; telephone (301) 504–0800, extension 1232; telefax (301) 504–0127.

SUPPLEMENTARY INFORMATION: Section 429 of the bill providing fiscal year 1999 appropriations for the Commission (Pub. L. 105–276) requires the Commission to propose, for comment, to revoke the 1996 amendments to the sleepwear standards, along with any subsequent amendments, not later than January 19, 1999. The law also requires the General Accounting Office (''GAO'') to review burn incident data from the ignition of children's sleepwear from small open-flame sources for the period July 1, 1997 through January 1, 1999. The review must be completed by April 1, 1999 and be submitted to the Congress and the Commission.

Based on the GAO findings and other available information, the Commission is required to issue a final rule by July 1, 1999. The final rule must (1) revoke, (2) maintain, or (3) modify the 1996 and other later amendments of the flammability standards for children's sleepwear. The rulemaking conducted with respect to this matter is not subject to (1) the Consumer Product Safety Act, 15 U.S.C. 2051 *et seq.*, (2) the Flammable Fabrics Act, 15 U.S.C. 1191 *et seq.*, (3) the Regulatory Flexibility Act, 5 U.S.C. 601 *et seq.*, (4) the National Environmental Policy Act of 1969, 42 U.S.C. 4321 *et seq.*, (5) the Small Business Regulatory Enforcement Fairness Act of 1996, Pub. L. 104–121, or (6) any other statute or Executive order.

In accordance with Pub. L. 105–276 the Commission, on January 19, 1999, 64 FR 2867, proposed to revoke the September 9, 1996 (61 FR 47634) and subsequent amendments, including the technical amendments issued January 19, 1999 (64 FR 2833), and the clarification of statement of policy issued January 19, 1999 (64 FR 2832). The 1996 amendments excluded from the definition of children's sleepwear in the flammability of children's sleepwear standards (1) garments sized for infants nine months of age or younger, and (2) tight-fitting garments for children older than nine months. The 1999 technical amendments changed the location on garments where the specified dimensions of excluded sleepwear would be measured. The 1999 clarification of policy statement allowed infant garments and tight-fitting garments to be marketed and promoted with other complying (flame-resistant) sleepwear.

By letter received February 4, 1999, the National Fire Protection Association (''NFPA'') requested an opportunity to present oral testimony before the Commission on issues related to the proposed revocation. NFPA requested that a date for the oral presentations be selected after the public comments on the proposed revocation were due (March 22, 1999) and after the GAO report was due (April 1, 1999) so that it could review the comments and report before the oral proceeding. Similar requests were also received from the American Burn Association, the Coalition for American Trauma Care, and the Trauma Foundation. The Commission, having considered these requests, agreed that although Pub. L. 105–276 does not require an opportunity for oral presentations, these requests should be granted.

Accordingly, the Commission will conduct a public hearing on April 22, 1999 to receive oral presentations from the public concerning its proposed revocation. Persons who desire to make oral presentations at the hearing on April 22, 1999, should call or write Rockelle Hammond, Office of the Secretary, Consumer Product Safety Commission, Washington, DC 20207, telephone (301) 504–0800, telefax (301) 504–0127, or e-mail, cpsc-os@cpsc.gov, no later than April 8, 1999. Requests for copies of the GAO report and the written public comments on the proposed revocation should be made at the same phone number and address.

Presentations should be limited to approximately ten minutes. Persons desiring to make oral presentations must submit the written text of their presentations to the Office of the Secretary not later than April 15, 1999. The Commission reserves the right to impose further time limitations on all presentations and further restrictions to avoid duplication of presentations. The hearing will begin at 10 a.m. on April 22, 1999, and will conclude the same day.

Dated: March 2, 1999.

Sadye E. Dunn,

Secretary, Consumer Product Safety Commission.

[FR Doc. 99–5524 Filed 3–5–99; 8:45 am]

BILLING CODE 6355–01–P

DEPARTMENT OF THE TREASURY

Internal Revenue Service

26 CFR Part 20

[REG–106177–98]

RIN 1545–AW20

Adequate Disclosure of Gifts; Correction

AGENCY: Internal Revenue Service (IRS), Treasury.

ACTION: Correction to notice of proposed rulemaking.

SUMMARY: This document contains a correction to the notice of proposed rulemaking (REG–106177–98), which was published in the **Federal Register** Tuesday, December 22, 1998 (63 FR 70701), relating to changes made by the Taxpayer Relief Act of 1997 and the Internal Revenue Service Restructuring and Reform Act of 1998 regarding the valuation of prior gifts in determining estate and gift tax liability, and the period of limitations for assessing and collecting gift tax.

FOR FURTHER INFORMATION CONTACT: William L. Blodgett, (202) 622–3090 (not a toll-free number).

SUPPLEMENTARY INFORMATION:

Background

The notice of proposed rulemaking that is the subject of this correction is under sections 2001 and 2504 of the Internal Revenue Code.

Need for Correction

As published, REG–106177–98 contains an error which may prove to be misleading and is in need of clarification.

Correction of Publication

Accordingly, the publication of the notice of proposed rulemaking (REG–106177–98), which was the subject of FR Doc. 98–33648, is corrected as follows:

§ 20.2001–1 [Corrected]

On page 70704, column 3, § 20.2001–1(c) introductory text, line 2, the language ''of paragraph (a) of this section, the'' is corrected to read ''of paragraph (b) of this section, the''.

Michael L. Slaughter,

Acting Chief, Regulations Unit, Assistant Chief Counsel (Corporate).

[FR Doc. 99–5532 Filed 3–5–99; 8:45 am]

BILLING CODE 4830–01–U

DEPARTMENT OF TRANSPORTATION

National Highway Traffic Safety Administration

49 CFR Part 572

[Docket No. NHTSA–99–5156]

RIN 2127–AG78

Anthropomorphic Test Dummy; Occupant Crash Protection

AGENCY: National Highway Traffic Safety Administration (NHTSA), Department of Transportation.

ACTION: Notice of proposed rulemaking.

SUMMARY: This document proposes to adopt design and performance specifications for a new 12-month-old infant dummy. The new dummy is especially needed to evaluate the effects of air bag deployment on children who are not properly positioned at the time of a crash, i.e., out-of-position. It would also provide greater and more useful information in a variety of crash environments to better evaluate child safety. Adopting the dummy would be the first step toward using it to evaluate the safety of air bags for infants and very young children. The separate issue of specifying use of the dummy in determining compliance with performance tests, e.g., as part of the occupant protection standard and/or child restraint standard, will be addressed in other rulemakings, most notably the proposed advanced air bag rulemaking.

DATES: You should submit your comments early enough to ensure that Docket Management receives them not later than April 22, 1999.

ADDRESSES: You should mention the docket number of this document in your comments and submit your comments in writing to: Docket Management, Room PL–401, 400 Seventh Street, S.W., Washington, D.C., 20590.

You may call the Docket at 202–366–9324. You may visit the Docket from 10:00 a.m. to 5:00 p.m., Monday through Friday.

FOR FURTHER INFORMATION CONTACT: *For non-legal issues,* you may call Stan Backaitis, Office of Crashworthiness Standards, at 202–366–4912.

For legal issues, you may call Rebecca MacPherson, Office of the Chief Counsel, at 202-366–2992.

You may send mail to both of these officials at National Highway Traffic Safety Administration, 400 Seventh St., S.W., Washington, D.C., 20590.

SUPPLEMENTARY INFORMATION: Air bag fatalities of children have raised serious concerns about how best to evaluate their safety in a variety of crash environments. We are working with the automotive industry to assure greater safety in motor vehicles through the development, evaluation and application of significantly improved occupant protection technologies. As part of our overall program to achieve greater safety, we are developing new and improved test devices to evaluate the relationship between observed injuries and the forces causing them. One of the new test devices is a 12-month-old infant dummy.

In 1990 the Society of Automotive Engineers (SAE) began the development of a 12-month-old infant dummy designed to evaluate a very young child's interaction with an air bag. At that time, the SAE Child Restraint Air Bag Interaction (CRABI) Task Force requested the SAE Mechanical Human Simulation Subcommittee to address the need for a new infant dummy that could be used in testing and evaluating the effects of child restraints and air bags, as well as their interaction, on infants. The CRABI Task Force had determined that the biofidelity and impact response of the existing infant dummies were inadequate and that those dummies were not suitable for modification or retrofit. In view of the deficiencies in those dummies, the task force concluded that an entirely new dummy was needed. The new dummy was to be capable of evaluating both rear facing and forward facing child restraints, as well as the injury potential of air bags for out-of-position children.

The SAE subsequently developed the CRABI 12-month-old infant dummy. Our initial review of the results of tests with the dummy in 1996 indicated serious structural and performance deficiencies that prevented it from being a stable and objective test device. We addressed these problems cooperatively with SAE Hybrid III Dummy Family Task Group. These efforts produced a substantially modified dummy. Some changes were made as late as September 1998.

The dummy's initial configuration and biomechanical response corridors were based on anthropometry and mass distribution of 3-year-old children and on scaling techniques from the 50th percentile male Hybrid III dummy. The scaling reflects differences in geometry and dimensional characteristics of particular body segments and their elastic properties. The dummy's biofidelity response corridors cover head impact response in drop tests and neck flexion in pendulum tests.

Since we could not determine the stiffness of the ribcage and abdomen based on existing biofidelity data, we asked a medical advisory group at the Children's National Medical Center in Washington, D.C. to evaluate the dummy based on its expertise with children of that age group. Changes were made to the stiffness of the dummy's ribcage as a result of the physicians' evaluation and recommendation. The stiffness of the dummy's abdomen was deemed to appropriately mimic that of an actual child.

While the CRABI Task Force had recommended that the dummy be tested while dressed in a diaper and standard clothing during tests, we have not conducted any tests with a diapered dummy. We have decided against using diapers because we believe diapers would prevent the dummy from producing repeatable results.

Based on our evaluation of the latest version of the CRABI 12-month-old infant crash test dummy through a new, rigorous test program, we have tentatively concluded that the dummy is ready for incorporation into Part 572. As a result of our evaluation and the dummy's intended use in forward and rear facing child restraints, we are proposing calibration specifications for the head and neck both in frontal and rear impacts. We are also proposing calibration specifications for a frontal impact test that measures thorax responses and a torso flexion stiffness test. We are placing in the docket a technical report entitled ''Development and Evaluation of the CRABI 12-Month-Old Infant Crash Test Dummy (January, 1999 version).'' That report provides the technical information supporting this rulemaking.

The proposed specifications and performance criteria for the CRABI 12-month-old infant crash test dummy would consist of two items:

(1) A drawings and specifications package entitled ''Parts List and Drawings and for the 12-Month-Old Infant (CRABI) Dummy (January 1999)''; and

(2) A user's manual entitled ''User's Manual for the CRABI 12-Month-Old Infant Dummy [a date would be inserted in the final rule].''

In order to facilitate comment on the general content and format of the user's manual, we have placed in the docket a copy of a manual entitled ''User's Guide for the Twelve and Eighteen Month Old Infant Dummies (CRABI)'', SAE Engineering Aid 27 (June 1995).

The specifications are intended to ensure that the dummies are uniform in their construction and capable of repeatable and reproducible response in the impact environment. We note that the first item listed above, the parts list

and drawings, is available for inspection in our technical reference library. (Since this item is non-scannable, we cannot place it in the DOT Dockets Management System (DMS). Instead, we have placed in the docket a statement indicating where this item may be viewed, i.e., in NHTSA's technical reference library. You may also obtain copies from Reprographic Technologies, 9000 Virginia Manor Road, Beltsville, MD 20705; Telephone: (301) 419–5070.

As we have done for other dummies, we are proposing impact performance criteria to serve as calibration checks, and to further assure the kinematic uniformity of the dummy and the absence of structural damage and functional deficiency from previous use. The tests address head, neck, and thorax impact responses and resistance to flexion motion assessments of the lumbar spine-abdomen area when the upper torso half is flexed relative to the lower half.

We are proposing generic specifications for all of the dummy-based sensors. For most earlier dummies, we specified sensors by make and model. However, we believe that approach is unnecessarily restrictive and limits innovation and competition.

The proposed sensor specifications are essentially generic and reflect performance characteristics of the sensors used in our dummy evaluation series that are identified by make and model in the above referenced technical report ''Development and Evaluation of the CRABI 12-month-old Infant Dummy.'' Specifications for the proposed sensors are included in the drawing package. You are encouraged to comment on the adequacy of the proposed specifications; the potential impact on the quality of measurements to be acquired, including the comparability of data using sensors manufactured by different companies; and issues related to calibration assurance tests.

We note that the CRABI 12-month-old infant dummy is the fourth of several new dummies we are proposing to add to Part 572. We have already proposed adding a new, advanced 6-year-old dummy (H–III6C) (63 FR 35170), a fifth percentile small adult female dummy (H–III5F) (63 FR 46981), and an advanced 3-year-old dummy (H–III3C) (64 FR 4385). We intend to use these dummies in connection with our rulemaking for advanced air bags (NRPM at 63 FR 49958). As part of that rulemaking, we could specify all of these dummies for use in a variety of potential Standard No. 208 tests, including static out-of-position tests and/or various dynamic tests. In a separate rulemaking, we could consider specifying these child dummies for use in Standard No. 213 tests.

We emphasize, however, that this notice only concerns the CRABI 12-month-old dummy, and that we are only proposing to add the dummy to Part 572. However, since one of the primary purposes of adding the dummy to Part 572 is to enable it to be specified for use in the Federal motor vehicle safety standards, we encourage you to address its suitability for tests related to occupant crash protection, e.g., those discussed or proposed in the NPRM on advanced air bags. We also encourage you to address the dummy's suitability with respect to measuring proposed and other injury criteria,[1] as well as the choice of and potential impact of traditional clothing on the dummy and its calibration measurements.

Regulatory Analyses and Notices

Executive Order 12866 and DOT Regulatory Policies and Procedures

Executive Order 12866, ''Regulatory Planning and Review'' (58 FR 51735, October 4, 1993), provides for making determinations whether a regulatory action is ''significant'' and therefore subject to Office of Management and Budget (OMB) review and to the requirements of the Executive Order. The Order defines a ''significant regulatory action'' as one that is likely to result in a rule that may:

(1) Have an annual effect on the economy of $100 million or more or adversely affect in a material way the economy, a sector of the economy, productivity, competition, jobs, the environment, public health or safety, or State, local, or Tribal governments or communities;

(2) Create a serious inconsistency or otherwise interfere with an action taken or planned by another agency;

(3) Materially alter the budgetary impact of entitlements, grants, user fees, or loan programs or the rights and obligations of recipients thereof; or

(4) Raise novel legal or policy issues arising out of legal mandates, the President's priorities, or the principles set forth in the Executive Order.

We have considered the impact of this rulemaking action under Executive Order 12866 and the Department of Transportation's regulatory policies and procedures. This rule is not considered a significant regulatory action under section 3(f) of the Executive Order 12866. Consequently, it was not reviewed by the Office of Management and Budget. This rulemaking document was not reviewed by the Office of Management and Budget under E.O. 12866, ''Regulatory Planning and Review.'' The rulemaking action is also not considered to be significant under the Department's Regulatory Policies and Procedures (44 FR 11034; February 26, 1979).

This document proposes to amend 49 CFR Part 572 by adding design and performance specifications for a new 12-month-old child dummy which the agency may later separately propose for use in the Federal motor vehicle safety standards. If this proposed rule becomes final, it would impose requirement on only those businesses which choose to manufacture or test with the dummy. It may indirectly affect vehicle and child seat manufacturers if it is incorporated by reference into the advanced air bag rulemaking or a future Child Seating Systems (FMVSS No. 213) rulemaking.

The cost of an uninstrumented CRABI dummy is approximately $17,000. Instrumentation would add approximately $14,000 to $45,000 to the cost, depending on the amount of data channels the user chooses to collect.

Because the economic impacts of this proposal are so minimal, no further regulatory evaluation is necessary.

Executive Order 12612

We have analyzed this proposal in accordance with Executive Order 12612 (''Federalism''). We have determined that this proposal does not have sufficient Federalism impacts to warrant the preparation of a federalism assessment.

Executive Order 13045

Executive Order 13045 (62 FR 19885, April 23, 1997) applies to any rule that: (1) is determined to be ''economically significant'' as defined under E.O. 12866, and (2) concerns an environmental, health or safety risk that NHTSA has reason to believe may have a disproportionate effect on children. If the regulatory action meets both criteria, we must evaluate the environmental health or safety effects of the planned rule on children, and explain why the planned regulation is preferable to other potentially effective and reasonably feasible alternatives considered by us.

This rule is not subject to the Executive Order because it is not economically significant as defined in E.O. 12866. It does indirectly involve decisions based on health risks that disproportionately affect children, namely, the risk of deploying air bags to

[1] For information concerning potential injury criteria, see *Development of Improved Injury Criteria for the Assessment of Advanced Automotive Restraint Systems*, June, 1998, Docket No. NHTSA98–4405–9. (Available on the NHTSA website at http://www.nhtsa.dot.gov.)

infants. However, this rulemaking serves to reduce, rather than increase, that risk.

Executive Order 12778

Pursuant to Executive Order 12778, ''Civil Justice Reform,'' we have considered whether this proposed rule would have any retroactive effect. We conclude that it would not have such effect. Under 49 U.S.C. 30103, whenever a Federal motor vehicle safety standard is in effect, a State may not adopt or maintain a safety standard applicable to the same aspect of performance which is not identical to the Federal standard, except to the extent that the state requirement imposes a higher level of performance and applies only to vehicles procured for the State's use. 49 U.S.C. 30161 sets forth a procedure for judicial review of final rules establishing, amending or revoking Federal motor vehicle safety standards. That section does not require submission of a petition for reconsideration or other administrative proceedings before parties may file suit in court.

Regulatory Flexibility Act

Pursuant to the Regulatory Flexibility Act (5 U.S.C. 601 *et seq.*, as amended by the Small Business Regulatory Enforcement Fairness Act (SBREFA) of 1996) whenever an agency is required to publish a notice of rulemaking for any proposed or final rule, it must prepare and make available for public comment a regulatory flexibility analysis that describes the effect of the rule on small entities (i.e., small businesses, small organizations, and small governmental jurisdictions). However, no regulatory flexibility analysis is required if the head of an agency certifies the rule will not have a significant economic impact on a substantial number of small entities. SBREFA amended the Regulatory Flexibility Act to require Federal agencies to provide a statement of the factual basis for certifying that a rule will not have a significant economic impact on a substantial number of small entities.

The Administrator has considered the effects of this rulemaking action under the Regulatory Flexibility Act (5 U.S.C. 601 *et seq.*) and certifies that this proposal would not have a significant economic impact on a substantial number of small entities. The proposal would not impose or rescind any requirements for anyone. The Regulatory Flexibility Act does not, therefore, require a regulatory flexibility analysis.

National Environmental Policy Act

We have analyzed this proposed amendment for the purposes of the National Environmental Policy Act and determined that it would not have any significant impact on the quality of the human environment.

Paperwork Reduction Act

Under the Paperwork Reduction Act of 1995, a person is not required to respond to a collection of information by a Federal agency unless the collection displays a valid OMB control number. This proposal does not propose any new information collection requirements.

National Technology Transfer and Advancement Act

Section 12(d) of the National Technology Transfer and Advancement Act of 1995 (NTTAA), Public Law 104–113, section 12(d) (15 U.S.C. 272) directs us to use voluntary consensus standards in its regulatory activities unless doing so would be inconsistent with applicable law or otherwise impractical. Voluntary consensus standards are technical standards (e.g., materials specifications, test methods, sampling procedures, and business practices) that are developed or adopted by voluntary consensus standards bodies, such as the Society of Automotive Engineers (SAE). The NTTAA directs us to provide Congress, through OMB, explanations when we decide not to use available and applicable voluntary consensus standards.

The CRABI twelve-month-old dummy that is the subject of this document was developed under the auspices of the SAE. All relevant SAE standards were reviewed as part of the development process. The following voluntary consensus standards have been used in developing the dummy:

- SAE Recommended Practice J211, Rev. Mar95 ''Instrumentation for Impact Tests'';
- SAE J1733 of 1994–12 ''Sign Convention for Vehicle Crash Testing''.

Unfunded Mandates Reform Act

Section 202 of the Unfunded Mandates Reform Act of 1995 (UMRA) requires Federal agencies to prepare a written assessment of the costs, benefits and other effects of proposed or final rules that include a Federal mandate likely to result in the expenditure by State, local or tribal governments, in the aggregate, or by the private sector, of more than $100 million in any one year (adjusted for inflation with base year of 1995). Before promulgating a NHTSA rule for which a written statement is needed, section 205 of the UMRA generally requires us to identify and consider a reasonable number of regulatory alternatives and adopt the least costly, most cost-effective or least burdensome alternative that achieves the objectives of the rule. The provisions of section 205 do not apply when they are inconsistent with applicable law. Moreover, section 205 allows us to adopt an alternative other than the least costly, most cost-effective or least burdensome alternative if we publish with the final rule an explanation why that alternative was not adopted.

This proposal does not propose to impose any unfunded mandates under the Unfunded Mandates Reform Act of 1995. This proposal does not meet the definition of a Federal mandate because it does not impose requirements on anyone. Further, it would not result in costs of $100 million or more to either State, local, or tribal governments, in the aggregate, or to the private sector. Thus, this proposal is not subject to the requirements of sections 202 and 205 of the UMRA.

Regulation Identifier Number (RIN)

The Department of Transportation assigns a regulation identifier number (RIN) to each regulatory action listed in the Unified Agenda of Federal Regulations. The Regulatory Information Service Center publishes the Unified Agenda in April and October of each year. You may use the RIN contained in the heading at the beginning of this document to find this action in the Unified Agenda.

Comments

How do I prepare and submit comments?

Your comments must be written and in English. To ensure that your comments are correctly filed in the Docket, please include the docket number of this document in your comments.

Your comments must not be more than 15 pages long. (49 CFR 553.21). We established this limit to encourage you to write your primary comments in a concise fashion. However, you may attach necessary additional documents to your comments. There is no limit on the length of the attachments.

Please submit two copies of your comments, including the attachments, to Docket Management at the address given above under **ADDRESSES**.

How can I be sure that my comments were received?

If you wish Docket Management to notify you upon its receipt of your comments, enclose a self-addressed,

stamped postcard in the envelope containing your comments. Upon receiving your comments, Docket Management will return the postcard by mail.

How do I submit confidential business information?

If you wish to submit any information under a claim of confidentiality, you should submit three copies of your complete submission, including the information you claim to be confidential business information, to the Chief Counsel, NHTSA, at the address given above under **FOR FURTHER INFORMATION CONTACT.** In addition, you should submit two copies, from which you have deleted the claimed confidential business information, to Docket Management at the address given above under **ADDRESSES**. When you send a comment containing information claimed to be confidential business information, you should include a cover letter setting forth the information specified in our confidential business information regulation. (49 CFR Part 512.)

Will the agency consider late comments?

We will consider all comments that Docket Management receives before the close of business on the comment closing date indicated above under **DATES**. To the extent possible, we will also consider comments that Docket Management receives after that date. If Docket Management receives a comment too late for us to consider it in developing a final rule (assuming that one is issued), we will consider that comment as an informal suggestion for future rulemaking action.

How can I read the comments submitted by other people?

You may read the comments received by Docket Management at the address given above under **ADDRESSES**. The hours of the Docket are indicated above in the same location.

You may also see the comments on the Internet. To read the comments on the Internet, take the following steps:

1. Go to the Docket Management System (DMS) Web page of the Department of Transportation *(http://dms.dot.gov/).*
2. On that page, click on ''search.''
3. On the next page (http://dms.dot.gov/search/), type in the four-digit docket number shown at the beginning of this document. Example: If the docket number were ''NHTSA–1998–1234,'' you would type ''1234.'' After typing the docket number, click on ''search.''
4. On the next page, which contains docket summary information for the docket you selected, click on the desired comments. You may download the comments. However, since the comments are imaged documents, instead of word processing documents, the downloaded comments are not word searchable.

Please note that even after the comment closing date, we will continue to file relevant information in the Docket as it becomes available. Further, some people may submit late comments. Accordingly, we recommend that you periodically check the Docket for new material.

List of Subjects in 49 CFR Part 572

Motor vehicle safety.

In consideration of the foregoing, NHTSA proposes to amend 49 CFR Part 572 as follows:

PART 572—ANTHROPOMORPHIC TEST DUMMIES

1. The authority citation for Part 572 would continue to read as follows:

Authority: 49 U.S.C. 332, 30111, 30115, 30117; and 30166 delegation of authority at 49 CFR 1.50.

2. 49 CFR Part 572 would be amended by adding a new Subpart R consisting of 572.150–572.156 to read as follows:

Subpart R—CRABI 12-Month-Old-Infant Crash Test Dummy

Sec.
572.150 Incorporation by reference.
572.151 General description.
572.152 Head assembly and test procedure.
572.153 Neck-headform assembly and test procedure.
572.154 Thorax assembly and test procedure.
572.155 Torso assembly and torso flexion test procedure.
572.156 Test condition and instrumentation.

Subpart R—CRABI 12-Month-Old-Infant Crash Test Dummy

§ 572.150 Incorporation by reference.

(a) The following materials are hereby incorporated in this subpart R by reference.

(1) A drawings and specifications package entitled ''Parts List and Drawings for the CRABI 12-Month-Old-Infant Crash Test Dummy (January 1999)'';

(2) A user's manual entitled ''User's Manual for the CRABI 12-Month-Old-Infant Crash Test Dummy [a date will be inserted in the final rule]'';

(3) SAE Recommended Practice J211, Rev. Mar95 ''Instrumentation for Impact Tests''

(4) SAE J1733 of 1994–12 ''Sign Convention for Vehicle Crash Testing''.

(b) The Director of the Federal Register approved those materials incorporated by reference in accordance with 5 U.S.C. 552(a) and 1 CFR part 51. Copies of the materials may be inspected at NHTSA's Docket Section, 400 Seventh Street S.W., room 5109, Washington, DC, or at the Office of the Federal Register, 800 North Capitol Street, NW, Suite 700, Washington, DC.

(c) The incorporated materials are available as follows:

(1) The drawings and specifications package referred to in paragraph (a)(1) of this section and the user's manual referred to in paragraph (a)(2) of this section are available from Reprographic Technologies, 9000 Virginia Manor Road, Beltsville, MD 20705 (301) 419–5070.

(2) The SAE materials referred to paragraphs (a)(3) and (a)(4) of this section are available from the Society of Automotive Engineers, Inc., 400 Commonwealth Drive, Warrendale, PA 15096.

§ 572.151 General description.

(a) The representative 12 Month-Old-Infant crash test dummy is described by the following materials:

(1) Technical drawings and specifications package 921022–000, the titles of which are listed in Table A;

(2) Operation and Maintenance Manual (to be incorporated at issuance of final rule);

(b) The dummy is made up of the component assemblies set out in the following Table A:

TABLE A

Component assembly	Drawing number
Head Assembly	921022–001
Neck Assembly (complete)	921022–041
Upper/Lower Torso Assembly.	921022–060
Leg Assembly	921022–055 R&L
Arm Assembly	921022–054 R&L

(c) Adjacent segments of the dummy are joined in a manner such that, except for contacts existing under static conditions, there is no contact between metallic elements throughout the range of motion or under simulated crash impact conditions.

(d) The structural properties of the dummy are such that the dummy conforms to this part in every respect before its use in any test similar to those specified in Standard Nos. 208, Occupant Crash Protection, and 213, Child Restraint Systems.

§ 572.152 Head assembly and test procedure.

(a) The head assembly for this test consists of the assembly (drawing

921022–001), triaxial mount block (SA572–80), and 3 accelerometers (drawing SA572–S4).

(b) Frontal and rear impact.

(1) Frontal impact. When the head assembly in paragraph (a) of this section is dropped from a height of 376.0+/−1.0 mm (14.8+/−0.04 in) in accordance with paragraph (c)(3)(i) of this section, the peak resultant acceleration at the location of the accelerometers at the head CG shall not be less than 100 g or more than 120 g. The resultant acceleration vs. time history curve shall be unimodal, and the oscillations occurring after the main pulse shall be less than 10 percent of the peak resultant acceleration. The lateral acceleration shall not exceed +/−15 g's.

(2) Rear impact. When the head assembly in paragraph (a) of this section is dropped from a height of 376.0+/−1.0 mm (14.8+/−0.04 in) in accordance with paragraph (c)(3)(ii) of this section, the peak resultant acceleration at the location of the accelerometers at the head CG shall not be less than 55 g and more than 71 g. The resultant acceleration vs. time history curve shall be unimodal, and the oscillations occurring after the main pulse shall be less than 10 percent of the peak resultant acceleration. The lateral acceleration shall not exceed +/−15 g's.

(c) Head test procedure. The test procedure for the head is as follows:

(1) Soak the head assembly in a controlled environment at any temperature between 18.9 and 25.6 °C (66 and 78 °F) and at any relative humidity between 10 and 70 percent for at least four hours prior to a test. These temperature and humidity levels shall be maintained throughout the entire testing period specified in this section.

(2) Prior to the test, clean the impact surface of the head skin and the steel impact plate surface with isopropyl alcohol, trichlorethane, or an equivalent. Both impact surfaces must be clean and dry for testing.

(3)(i) Suspend the head assembly with its midsagittal plane in vertical orientation as shown in Figure R1. The lowest point on the forehead is 376.0+/−1.0 mm (14.8+/−0.04 in) from the steel impact surface. The 1.57 mm (0.062 in) diameter holes located on either side of the dummy's head in transverse alignment with the CG, are used to ensure that the head transverse plane is level with respect to the impact surface. The angle between the lower surface plane of the neck transducer mass simulator (drawing 910420–003) and the plane of the impact surface is 45+/−1 degrees.

(ii) Suspend the head assembly with its midsagittal plane in vertical orientation as shown in Figure R2. The lowest point on the back of the head is 376.0+/−1.0 mm (14.8+/−0.04 in) from the steel impact surface. The 1.57 mm (0.062 in) diameter holes located on either side of the dummy's head in transverse alignment with the CG are used to ensure that the head transverse plane is level with respect to the impact surface. The angle between the lower surface plane of the neck transducer mass simulator (drawing 910420–003) and the impact surface is 90+/−1 degrees.

(4) Drop the head assembly from the specified height by a means that ensures a smooth, instant release onto a rigidly supported flat horizontal steel plate which is 51 mm (2 in) thick and 610 mm (24 in) square. The impact surface shall have a finish of not less than 0.2 microns (8 micro inches) (RMS) and not more than 2 microns (80 micro inches) (RMS).

(5) Allow at least 2 hours between successive tests on the same head.

§ 572.153 Neck-headform assembly and test procedure.

(a) The neck and headform assembly for the purposes of this test consists of the neck assembly (drawing 921022–041), adapter assembly (drawing TE3200–160), force-moment transducer (drawing SA572–S23), and headform assembly (drawing TE3200–140).

(b) When the neck and headform assembly, as defined in § 572.153(a), is tested according to the test procedure in § 572.153(c), it shall have the following characteristics:

(1) Flexion.

(i) Plane D referenced in Figure R3 shall rotate in the direction of pre-impact flight with respect to the pendulum's longitudinal centerline not less than 75 degrees and not more than 89 degrees between 42 milliseconds (ms) and 56 ms after time zero.

(ii) The peak moment measured by the neck transducer (drawing SA572–S23) about the occipital condyles shall have a value not less than 37 Nm (27.3 ft-lb) and not more than 45 Nm (33.2 ft-lb) within the minimum and maximum rotation interval. The positive moment shall decay for the first time to 5 Nm (3.7 ft-lb) between 60 ms and 80 ms.

(2) Extension.

(i) Plane D referenced in Figure R4 shall rotate in the direction of preimpact flight with respect to the pendulum's longitudinal centerline not less than 78 degrees and not more than 90 degrees between 58 ms and 66 ms after time zero.

(ii) The peak negative moment measured by the neck transducer (drawing SA572–S23) about the occipital condyles shall have a value not more than −11 Nm (−8.1 ft-lb) and not less than −23 Nm (−17.0 ft-lb) within the minimum and maximum rotation interval. The negative moment shall decay for the first time to −5 Nm (−3.7 ft-lb) between 78 ms and 90 ms after time zero.

(3) Time-zero is defined as the time of initial contact between the pendulum striker plate and the honeycomb material.

(c) Test Procedure.

(1) Soak the neck assembly in a controlled environment at any temperature between 20.6 and 22.2°C (69 and 72 °F) and at any relative humidity between 10 and 70 percent for at least four hours prior to a test. These temperature and humidity levels shall be maintained throughout the entire testing period specified in this section.

(2) Torque the jam nut (drawing 9001336) on the neck cable (drawing ATD–6206) to 0.2 to 0.3 Nm (1.9–2.4 in-lb).

(3) Mount the neck-headform assembly, defined in paragraph (b) of this section, on the pendulum so the midsagittal plane of the headform is vertical and coincides with the plane of motion of the pendulum as shown in Figure R3 for flexion and Figure R4 for extension tests.

(i) The moment and rotation data channels are defined to be zero when the longitudinal centerline of the neck and pendulum are parallel.

(ii) The test shall be conducted without inducing any torsion type twisting of the neck.

(4) Release the pendulum and allow it to fall freely to achieve an impact velocity of 5.2+/−0.1 m/s (17.1+/−0.4 ft/s) for flexion and 2.5+/−0.1 m/s (8.2+/−0.4 ft/s) for extension measured at the center of the pendulum accelerometer at the instant of contact with the honeycomb.

(i) Time-zero is defined as the time of initial contact between the pendulum striker plate and the honeycomb material. The pendulum data channel should be at the zero level at this time.

(ii) Stop the pendulum from the initial velocity with an acceleration vs. time pulse which meets the velocity change as specified below. Integrate the pendulum acceleration data channel to obtain the velocity vs. time curve as indicated in Table B:

TABLE B.—PENDULUM PULSE

Time ms	Flexion		Time ms	Extension	
	m/s	ft/s		m/s	ft/s
10	1.6–2.3	5.2–7.5	6	0.8–1.2	2.6–3.9
20	3.4–4.2	11.2–13.8	10	1.5–2.1	4.9–6.9
25	4.3–5.2	14.1–17.1	14	2.2–2.9	7.2–9.5

§ 572.154 Thorax assembly and test procedure.

(a) Thorax Assembly. The thorax consists of the part of the torso assembly shown in drawing 921022–060.

(b) When the thorax of a completely assembled dummy (drawing 921022–000) is impacted by a test probe conforming to § 572.156(a) at 5.0+/−0.1m/s (16.5+/−0.3 ft/s) according to the test procedure in paragraph (c) of this section, the peak force, measured by the impact probe in accordance with paragraph § 572.156(a), shall be not less than 1600 N (360 lb) and not more than 1700 N (382 lb).

(c) Test procedure.

(1) Soak the dummy in a controlled environment at any temperature between 20.6 and 22.2°C (69 and 72 F) and at any relative humidity between 10 and 70 percent for at least four hours prior to a test. These temperature and humidity levels shall be maintained throughout the entire testing period specified in this section.

(2) Dress the dummy in light-weight cotton stretch short-sleeve shirt and above-the-knee pants.

(3) Seat and orient the dummy on a level seating surface without back support as shown in Figure R5, with the lower limbs extended forward, parallel to the midsagittal, plane and the arms slightly forward of vertical with fingers barely touching the seating surface plane. The dummy's midsagittal plane is vertical within +/−1 degree and the posterior surface of the upper spine box is aligned at 90+/−1 degrees from the horizontal. (Shim material may be used under the upper legs to maintain the dummy's specified spine box surface alignment).

(4) Establish the impact point at the chest midsagittal plane so that the impact point of the longitudinal centerline of the probe coincides with the dummy's mid-sagittal plane and is centered on the torso 196+/−2.5 mm (7.7+/−0.1 in) vertically from the plane of the seating surface and is within 0.5 degrees of a horizontal plane.

(5) Impact the thorax with the test probe so that at the moment of contact the probe's longitudinal center line falls within 2 degrees of a horizontal line in the dummy's midsagittal plane.

(6) Guide the test probe during impact so that there is no significant lateral, vertical or rotational movement.

(7) Allow at least 30 minutes between successive tests.

§ 572.155 Torso assembly and torso flexion test procedure.

(a) Torso assembly. The torso assembly consists of the upper and lower halves as shown in drawing 921022–060. The test objective is to determine the flexion stiffness of lumbar spine and abdomen of a fully assembled dummy to flexion articulation between upper and lower halves of the torso assembly.

(b) When the upper half of the torso assembly of a seated dummy is subjected to a force continuously applied at the occipital condyle level through a rigidly attached adaptor bracket as shown in Figure R6 according to the test procedure set out in paragraph (c) of this section, the lumbar spine-abdomen assembly shall:

(1) Flex by an amount that permits the thorax spine box (drawing 921022–031) to rotate in midsagittal plane with respect to the rigidly affixed pelvic structure weldment (drawing 921022–035) from the initial spine box position to 45 degrees from the vertical, at which time the force level is not less than 90 N (20 lb) and not more than 120 N (27 lb), and

(2) Upon removal of the force, the upper torso assembly returns to within 10 degrees of its initial position.

(c) Test procedure. The procedure for the upper/lower torso flexion stiffness test is as follows:

(1) Soak the dummy in a controlled environment at any temperature between 20.6° and 22.2°C (69 and 72 F) and at any relative humidity between 10 and 70 percent for at least 4 hours prior to a test. These temperature and humidity levels shall be maintained throughout the entire testing period specified in this section.

(2) Assemble the complete dummy and attach to the fixture in a seated posture as shown in Figure R6.

(i) Secure the pelvis to the fixture at the lumbar load transducer or its structural replacement with a rigid bracket as shown in Figure R6.

(ii) Tighten the mountings so that the pelvis-lumbar joining surface is horizontal within ±1 deg.

(3) Install a low weight rigid loading adapter bracket (not to exceed 0.50 kg (1.1 lb)) to the posterior of the thoracic spine at the rear surface of the upper instrumentation cavity box as shown in Figure R6. The loading bracket is designed such that the point of load application coincides with the longitudinal axis of the occipital condyle and also provides means for measuring the rotation of the upper torso.

(4) Flex the elbow joints to 90 degrees and point the lower arms forward.

(5) Inspect and adjust, if necessary, the positioning of the abdominal insert within the pelvis cavity and with respect to the torso flesh to assure uniform fit and clearances.

(6) Attach means of loading the dummy through the point of load application as shown in Figure R6.

(7) The initial orientation of the angle reference plane of the seated, unsupported dummy shall not exceed 20 degrees of flexion as shown in Figure R6. The angle reference plane is defined by the transverse plane the rear surface of the upper thoracic instrumentation cavity box makes with respect to the vertical as shown in Figure R6.

(8) Apply a forward force in the midsagittal plane through the adaptor bracket as shown in Figure R6 at any upper torso deflection rate between 0.5 and 1.5 degrees per second, until the angle reference plane reaches 45 degrees of flexion with the applied force at 58.0 to 62.0 degrees from horizontal.

(9) Continue to apply a force sufficient to maintain 45 degrees of flexion for 10 seconds, and record the highest applied force during the 10 second period.

(10) Release all force as rapidly as possible, and measure the return angle with respect to the initial angle reference plane as defined in paragraph (c)(7) of this section 3 minutes after the release.

§ 572.156 Test conditions and instrumentation.

(a) The test probe used for thoracic impact tests is a 100.6 mm (4 in) diameter cylinder that weighs 2.86+/

−0.02 kg (6.3+/−0.04 lb), including instrumentation. Its impacting end has a flat right angle face that is rigid and has an edge radius of 12.7 mm (0.5 in). The test probe has an accelerometer mounted on the end opposite from impact with its sensitive axis co-linear to the longitudinal centerline of the cylinder.

(b) Head accelerometers have the dimensions, response characteristics, and sensitive mass locations specified in drawing SA572–S4 and are mounted in the head as shown in drawing 921022–000.

(c) The neck force-moment transducer has the dimensions, response characteristics, and sensitive axis locations specified in drawing SA 572–S23 and is mounted for testing as shown in figures R3 and R4.

(d) The shoulder force transducers have the dimensions and response characteristics specified in drawing SA572–S25 and are allowed to be mounted as an option in the torso assembly as shown in drawing 921022–000.

(e) The thorax accelerometers have the dimensions, response characteristics, and sensitive mass locations specified in drawing SA572–S4 and are mounted in the torso assembly in triaxial configuration as shown in drawing 921022–000.

(f) The lumbar spine force/moment transducer has the dimensions and response characteristics specified in drawing SA572–S23 and is mounted in the torso assembly as shown in drawing 921022–000.

(g) The pelvis accelerometers have the dimensions, response characteristics, and sensitive mass locations specified in drawing SA572–S4 and are mounted within the pelvis in triaxial configuration as shown in drawing 921022–000.

(h) The pubic force transducers have the dimensions and response characteristics specified in drawing SA572–S24 and are mounted in the torso assembly as shown in drawing 921022–000.

(i) The outputs of acceleration and force-sensing devices installed in the dummy and in the test apparatus specified by this part are recorded in individual data channels that conform to the requirements of SAE Recommended Practice J211, Rev. Mar95 ''Instrumentation for Impact Test,'' with channel classes as follows:

(1) Head and headform acceleration—Class 1000

(2) Neck :

(i) Forces—Class 1000

(ii) Moments—Class 600

(iii) Pendulum acceleration—Class 180

(3) Thorax:

(i) Spine and pendulum accelerations—Class 180

(ii) Shoulder forces—Class 600

(4) Lumbar:

(i) Forces—Class 1000

(ii) Moments—Class 600

(iii) Pendulum acceleration—Class 180

(5) Pelvis:

(i) Accelerations and forces—Class 1000

(ii) Moments—Class 600.

(j) Coordinate signs for instrumentation polarity conform to the Sign Convention For Vehicle Crash Testing, Surface Vehicle Information Report, SAE J1733, 1994–12.

(k) The mountings for sensing devices shall have no resonance frequency within range of 3 times the frequency range of the applicable channel class.

(l) Limb joints shall be set at 1 g, barely restraining the weight of the limb when it is extended horizontally. The force required to move a limb segment shall not exceed 2 g throughout the range of limb motion.

(m) Performance tests of the same component, segment, assembly, or fully assembled dummy shall be separated in time by period of not less than 30 minutes unless otherwise noted.

(n) Surfaces of dummy components are not painted except as specified in this part or in drawings subtended by this part.

BILLING CODE

Figure R 1
FRONTAL HEAD DROP TEST SET-UP SPECIFICATIONS

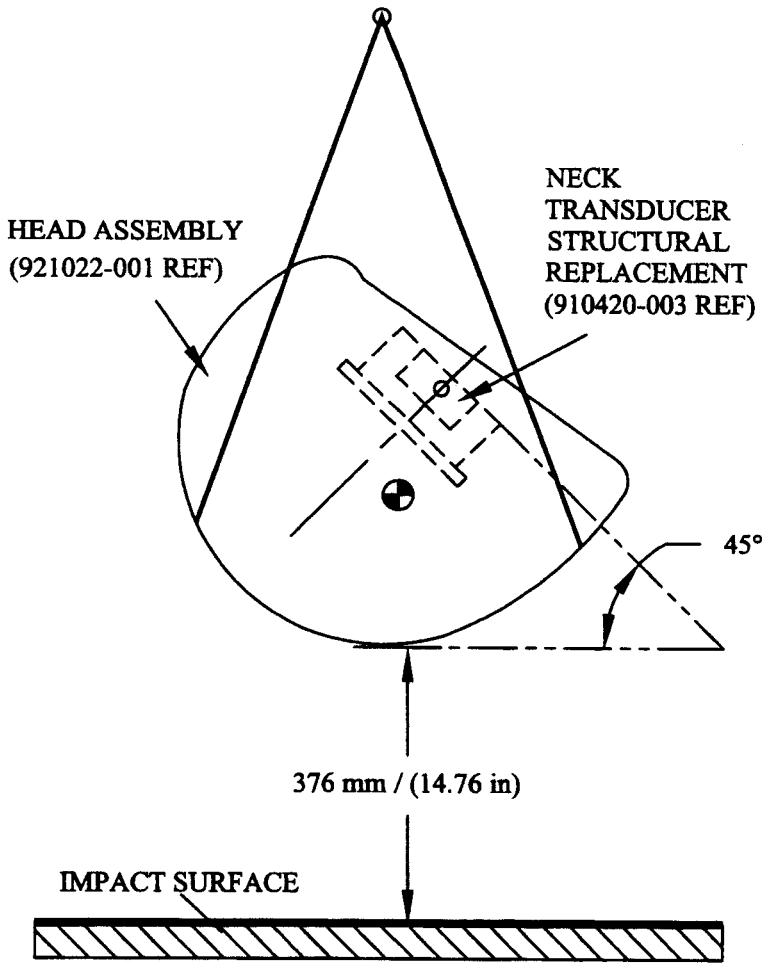

Figure R 2
REAR HEAD DROP TEST SET-UP SPECIFICATIONS

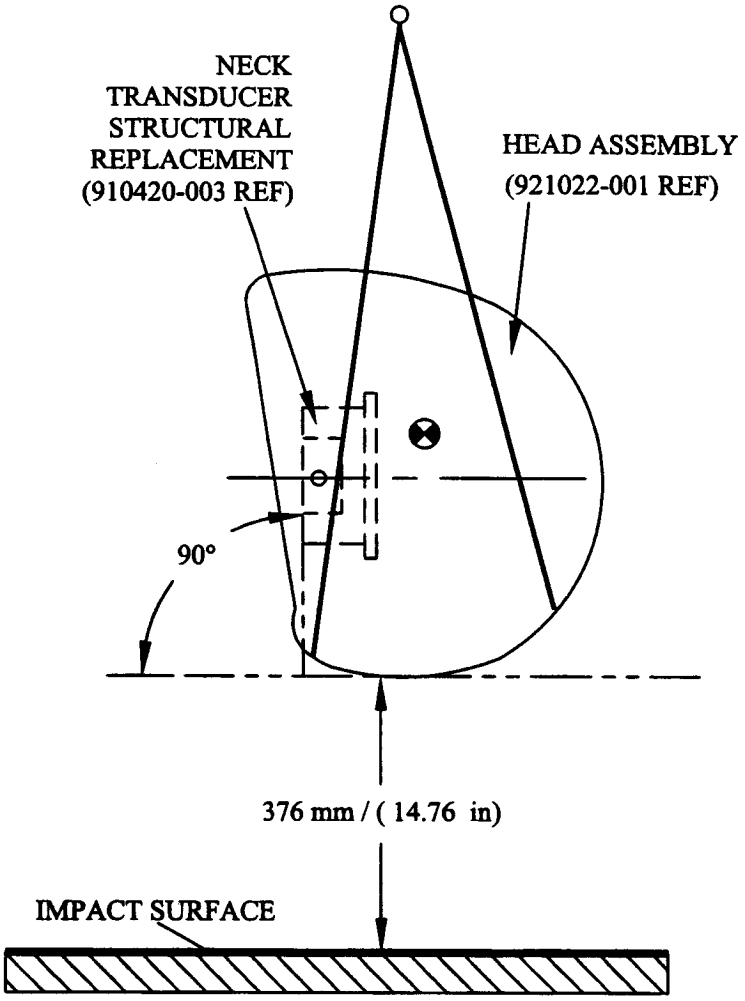

Figure R3

NECK FLEXION TEST SET-UP SPECIFICATIONS

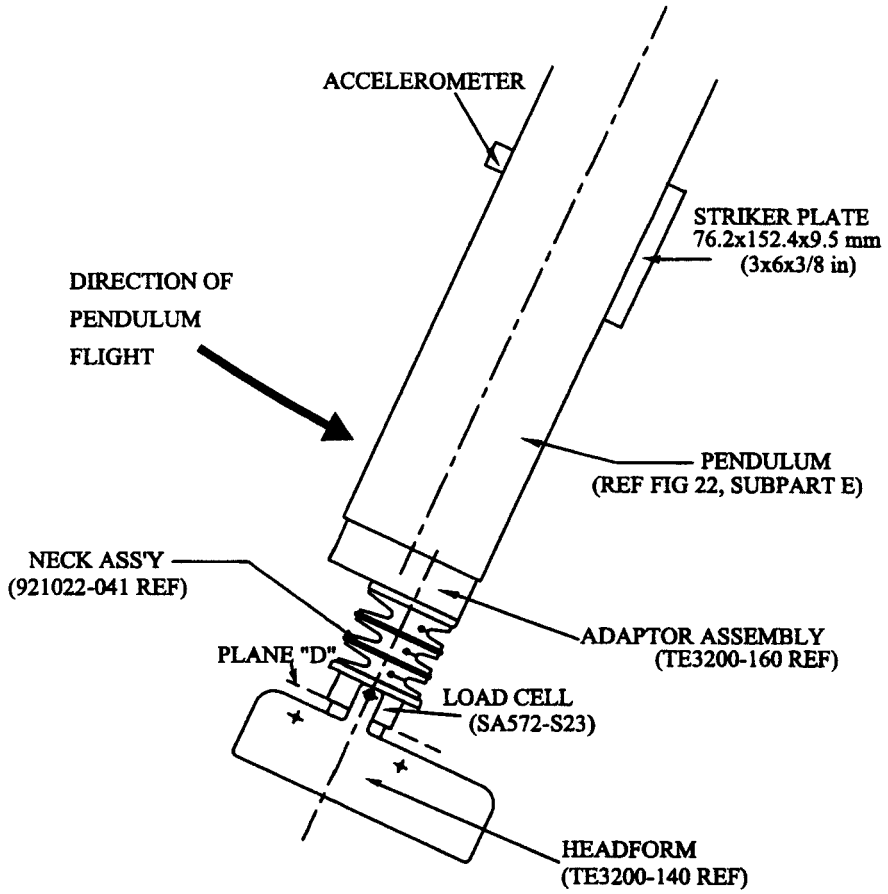

NOTE: MOUNT NECK AT LEADING EDGE OF PENDULUM TO AVOID INTERFERENCE.

Figure R4

NECK EXTENSION TEST SET-UP SPECIFICATIONS

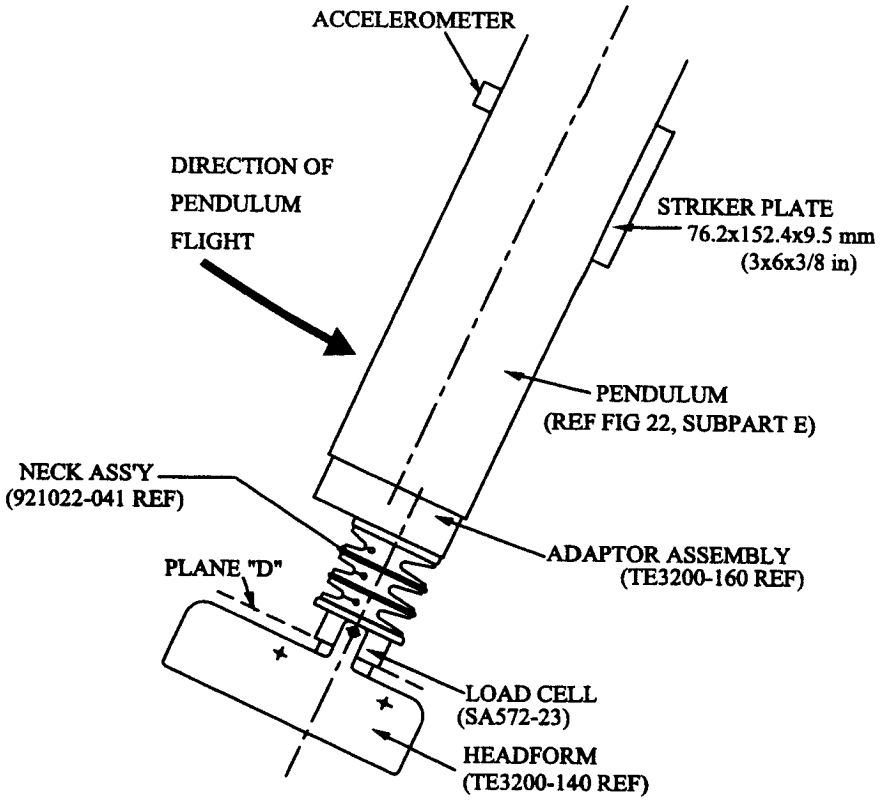

NOTE: MOUNT NECK AT LEADING EDGE OF PENDULUM TO AVOID INTERFERENCE.

Figure R 5

THORAX IMPACT TEST SET-UP SPECIFICATIONS

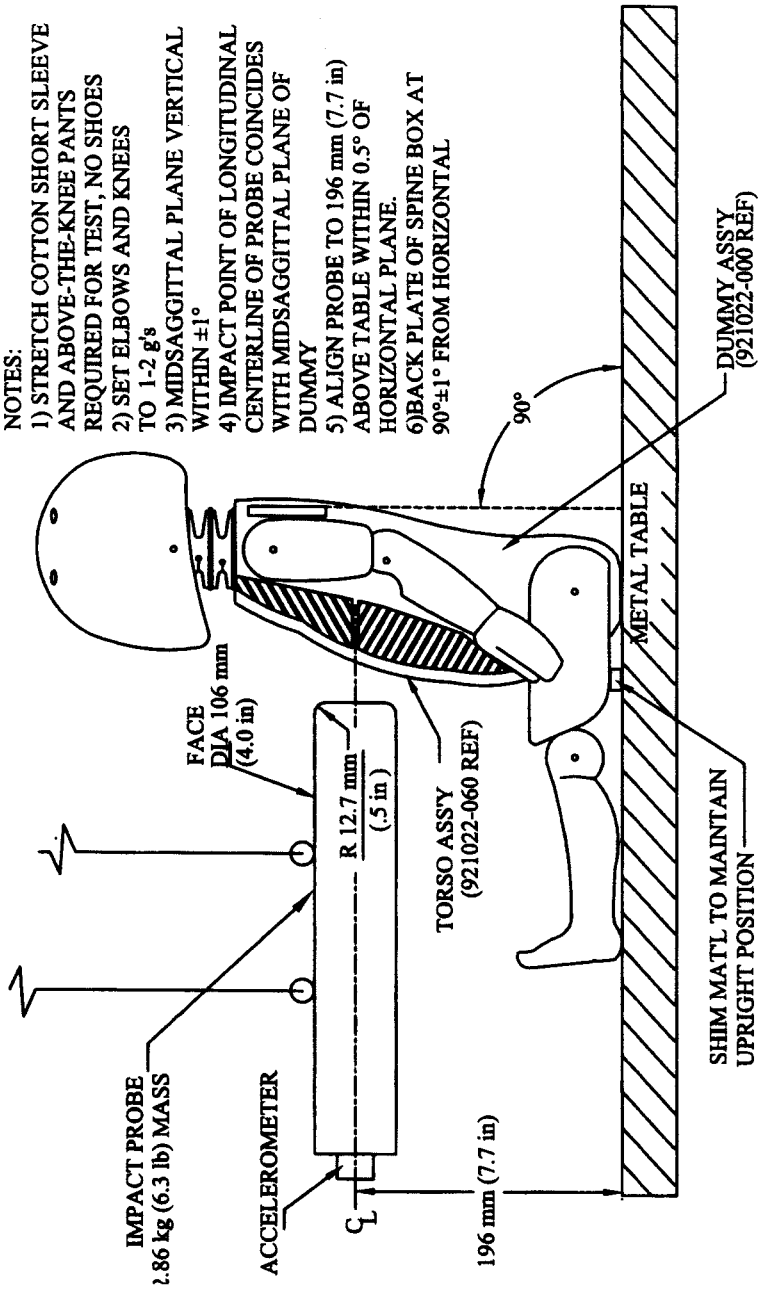

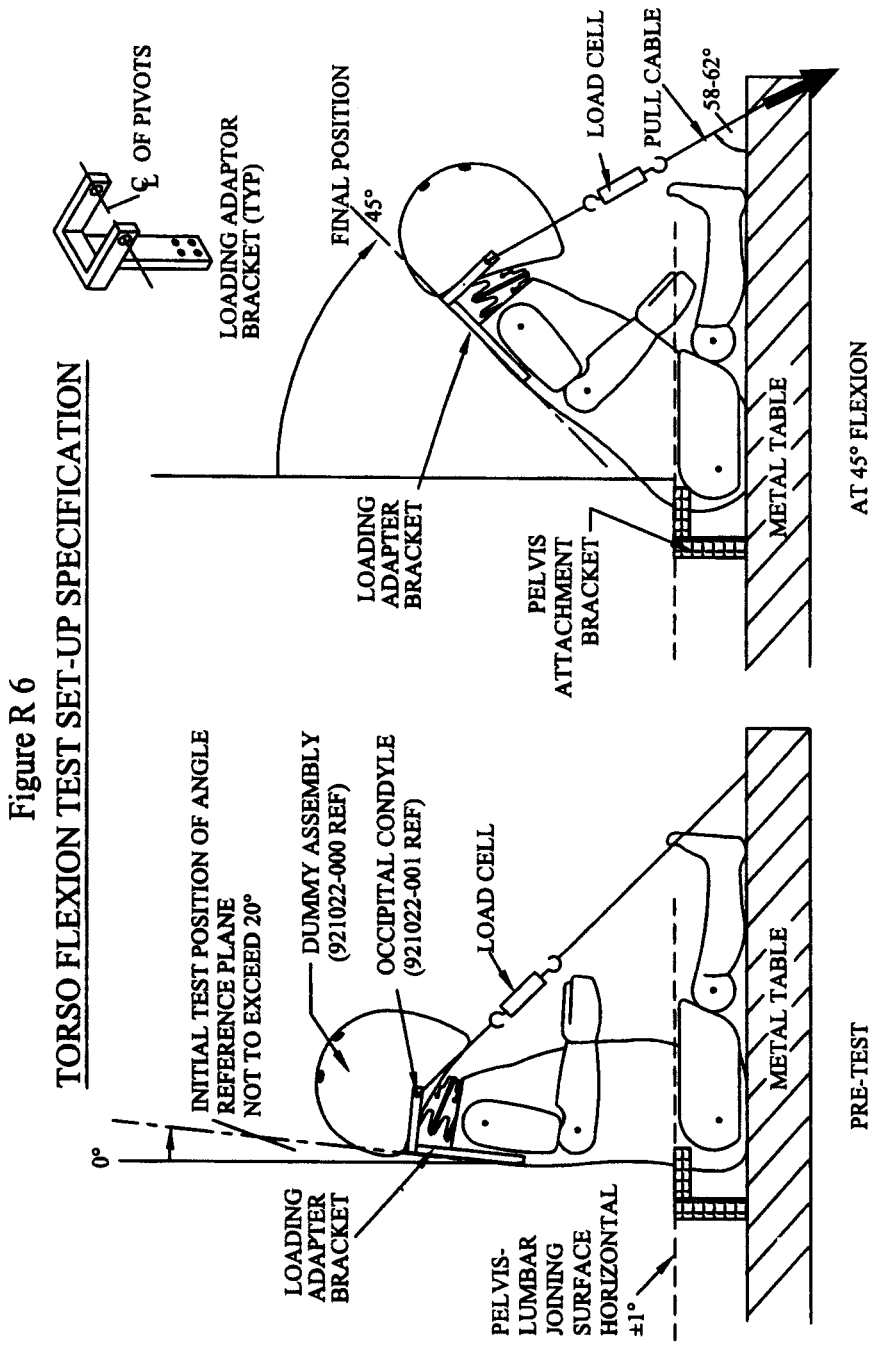

Issued March 2, 1999.

L. Robert Shelton,

Associate Administrator for Safety Performance Standards.

[FR Doc. 99–5509 Filed 3–5–99; 8:45 am]

BILLING CODE 4910–59–C

Notices

Federal Register
Vol. 64, No. 44
Monday, March 8, 1999

This section of the FEDERAL REGISTER contains documents other than rules or proposed rules that are applicable to the public. Notices of hearings and investigations, committee meetings, agency decisions and rulings, delegations of authority, filing of petitions and applications and agency statements of organization and functions are examples of documents appearing in this section.

DEPARTMENT OF AGRICULTURE

Office of White House Liaison

Notice of Intent To Request an Extension of a Currently Approved Information Collection

AGENCY: Office of White House Liaison.

ACTION: Notice and request for comments.

SUMMARY: In accordance with the Paperwork Reduction Act of 1995 (Pub. L. 104–13) and Office of Management and Budget (OMB) regulations at 5 CFR Part 1320 (60 FR 44978, August 29, 1995), this notice announces Office of White House Liaison's intention to request an extension of a currently approved information collection, Advisory Committee Membership Background Information surveys, that expires November 30, 1998.

DATES: Comments on this notice must be received by May 7, 1999.

ADDITIONAL INFORMATION OR COMMENTS: Contact Lisa Mushaw, Confidential Assistant, Office of White House Liaison, 1400 Independence Avenue SW, Room 216–A, Whitten Building, Washington, DC 20250; telephone (202) 720–2406.

Title: Advisory Committee Membership Background Information.

OMB Number: 0505–0001.

Expiration Date of Approval: November 30, 1999.

Type of Request: To extend a currently approved information collection.

Abstract: The primary objective for the use of the AD–755 form is to determine qualifications, suitability, and availability for service on advisory committees and commodity research and promotion boards. The information will be used to conduct background clearances and to compile annual reports on advisory committees.

Comments

Comments are invited on: (a) Whether the proposed collection of information is necessary for the proper performance of the functions of the agency, including whether the information will have practical utility; (b) the accuracy of the agency's estimate of the burden of the proposed collection of information including the validity of the methodology and assumptions used; (c) ways to enhance the quality, utility, and clarity of the information to be collected; and (d) ways to minimize the burden of the collection of information on those who are to respond, such as through the use of appropriate automated, electronic, mechanical, or other technological collection techniques or other forms of information technology. Comments may be sent to Lisa Mushaw, Confidential Assistant, White House Liaison, 1400 Independence Avenue, SW, Room 216–A, Washington, DC 20250. All responses to this notice will be summarized and included in the request for OMB approval. All comments will also become a matter of public record.

Signed at Washington, DC, on February 25, 1999.

Dan Glickman,

Secretary of Agriculture.

[FR Doc. 99–5614 Filed 3–5–99; 8:45 am]

BILLING CODE 3410–01–M

COMMISSION ON CIVIL RIGHTS

Agenda and Notice of Public Meeting of the Colorado Advisory Committee

Notice is hereby given, pursuant to the provisions of the rules and regulations of the U.S. Commission on Civil Rights, that a meeting of the Colorado Advisory Committee to the Commission will convene: (1) Thursday, May 13, 1999, at 6:00 p.m. and recess at 8:00 p.m.; (2) reconvene Friday, May 14, 1999, at 9:00 a.m. and recess at 6:00 p.m.; and (3) reconvene Saturday, May 15, 1999, at 10:00 a.m. and adjourn at 2:00 p.m. at the Pueblo Convention Center, 320 Central Main, Pueblo, Colorado 81003. The purpose of the meeting is to obtain information on the status of civil rights, race relations and equal opportunity in Pueblo with institutional and community leaders.

Persons desiring additional information, or planning a presentation to the Committee, should contact John Dulles, Director of the Rocky Mountain Regional Office, 303–866–1040 (TDD 303–866–1049). Hearing-impaired persons who will attend the meeting and require the services of a sign language interpreter should contact the Regional Office at least ten (10) working days before the scheduled date of the meeting.

The meeting will be conducted pursuant to the provisions of the rules and regulations of the Commission.

Dated at Washington, DC, February 26, 1999.

Carol-Lee Hurley,

Chief, Regional Programs Coordination Unit.

[FR Doc. 99–5569 Filed 3–5–99; 8:45 am]

BILLING CODE 6335–01–P

COMMISSION ON CIVIL RIGHTS

Agenda and Notice of Public Meeting of the South Carolina Advisory Committee

Notice is hereby given, pursuant to the provisions of the rules and regulations of the U.S. Commission on Civil Rights, that a meeting of the South Carolina Advisory Committee to the Commission will convene at 11:00 a.m. and adjourn at 1:00 p.m.; reconvening at 2:30 p.m. and adjourning at 5:30 p.m. on March 31, 1999, at the Yachtsman Hotel, 1400 N Ocean Boulevard, Myrtle Beach, South Carolina 29577. The purpose of the meeting is to discuss race relations and civil rights developments in the northeastern South Carolina area with local leaders, and to discuss draft of the ''Education in South Carolina'' report.

Persons desiring additional information, or planning a presentation to the Committee, should contact Bobby D. Doctor, Director of the Southern Regional Office, 404–562–7000 (TDD 404–562–7004). Hearing-impaired persons who will attend the meeting and require the services of a sign language interpreter should contact the Regional Office at least ten (10) working days before the scheduled date of the meeting.

The meeting will be conducted pursuant to the provisions of the rules and regulations of the Commission.

Dated at Washington, DC, February 26, 1999.

Carol-Lee Hurley,

Chief, Regional Programs Coordination Unit.

[FR Doc. 99–5568 Filed 3–5–99; 8:45 am]

BILLING CODE 6335–01–P

DEPARTMENT OF COMMERCE

Foreign-Trade Zones Board

[Order No. 1023]

Expansion of Foreign-Trade Zone 151; Findlay, OH; Correction

The **Federal Register** notice (64 FR 8542, 2/22/99) describing Foreign-Trade Zones Board Order 1023 (approved 2/10/99) authorizing expansion of Foreign-Trade Zone 151 in Findlay, Ohio, is corrected as follows:

Paragraph 6, Sentence 1, should read ''The application to expand FTZ 151–Site 1 and to include Site 2 is approved, * * *''

Dated: March 2, 1999.

Dennis Puccinelli,

Acting Executive Secretary.

[FR Doc. 99–5638 Filed 3–5–99; 8:45 am]

BILLING CODE 3510–DS–P

DEPARTMENT OF COMMERCE

International Trade Administration

[A–201–806]

Carbon Steel Wire Rope From Mexico: Preliminary Results of Antidumping Duty Administrative Review

AGENCY: Import Administration, International Trade Administration, Department of Commerce.

ACTION: Notice of preliminary results of antidumping duty administrative review.

SUMMARY: The Department of Commerce (''the Department'') is conducting an administrative review of the antidumping duty order on carbon steel wire rope from Mexico in response to requests by respondent, Aceros Camesa S.A. de C.V. (''Camesa''), and petitioner, the Committee of Domestic Steel Wire Rope and Specialty Cable Manufacturers (''the Committee''). This review covers exports of subject merchandise to the United States during the period March 1, 1997 through February 28, 1998.

We have preliminarily determined that sales have not been made below normal value (''NV''). If these preliminary results are adopted in our final results, we will instruct the U.S. Customs Service to liquidate appropriate entries without regard to antidumping duties. Interested parties are invited to comment on these preliminary results. Parties who submit comments are requested to submit with each comment a statement of the issue and a brief summary of the comment.

EFFECTIVE DATE: March 8, 1999.

FOR FURTHER INFORMATION CONTACT: Mark Hoadley, (202) 482–4106, Laurel LaCivita, (202) 482–4236, or Maureen Flannery, (202) 482–3020, AD/CVD Enforcement, Import Administration, International Trade Administration, U.S. Department of Commerce, 14th Street and Constitution Avenue, NW, Washington DC 20230.

Applicable Statute and Regulations

Unless otherwise stated, all citations to the statute are references to the provisions effective January 1, 1995, the effective date of the amendments made to the Tariff Act of 1930 (the Act) by the Uruguay Round Agreements Act. In addition, unless otherwise stated, all citations to the Department's regulations are references to the regulations as codified at 19 CFR Part 351 (April 1998).

SUPPLEMENTARY INFORMATION:

Background

The Department published in the **Federal Register** the antidumping duty order on steel wire rope from Mexico on March 25, 1993 (58 FR 16173). On March 11, 1998 we published in the **Federal Register** (63 FR 11868) a notice of opportunity to request an administrative review of the antidumping duty order on steel wire rope from Mexico covering the period March 1, 1997 through February 28, 1998.

In accordance with 19 CFR 351.213(b)(2), Camesa requested that we conduct an administrative review of Camesa's sales. The Committee also requested a review of Camesa's sales, in accordance with 19 CFR 351.213(b)(1). We published a notice of initiation of this antidumping duty administrative review on April 24, 1998 (63 FR 20378).

On May 22, 1998, Camesa requested that it be allowed to limit its sales reporting to sales involving identical or nearly identical merchandise. This request was opposed by the Committee in a letter dated June 19, 1998, but was granted by the Department on June 24, 1998. On June 26, 1998, the Committee submitted a letter objecting to the Department's decision. On September 25, 1998, the Department issued an amendment to its decision, expanding Camesa's reporting requirements while still allowing some limitation to the sales reported. For further information, see the ''Product Comparisons'' section below.

On September 1, 1998, the Department, in accordance with section 773(b)(2)(A)(ii), initiated an investigation of sales below cost. The Department determined to initiate this inquiry because, during the first administrative review of this proceeding, the Department disregarded some of Camesa's below-cost sales. The final results of the first administrative review were published on September 2, 1998 (63 FR 46753). We received cost data from Camesa on October 21, 1998.

During this review, the Department did not conduct a verification of the information provided by Camesa.

Scope of the Review

The product covered by this review is carbon steel wire rope. Steel wire rope encompasses ropes, cables, and cordage of iron or carbon steel, other than stranded wire, not fitted with fittings or made up into articles, and not made up of brass plated wire. Imports of these products are currently classifiable under the following Harmonized Tariff Schedule (HTS) subheadings: 7312.10.9030, 7312.10.9060 and 7312.10.9090.

Excluded from this review is stainless steel wire rope, which is classifiable under the HTS subheading 7312.10.6000, and all forms of stranded wire, with the following exception.

Based on the affirmative final determination of circumvention of the antidumping duty order, 60 FR 10831 (Feb. 28, 1995), the Department has determined that steel wire strand, when manufactured in Mexico by Camesa and imported into the United States for use in the production of steel wire rope, falls within the scope of the antidumping duty order on steel wire rope from Mexico. Such merchandise is currently classifiable under subheading 7312.10.3020 of the HTS.

Although HTS subheadings are provided for convenience and Customs purposes, the written description of the scope of this order remains dispositive.

This review covers one manufacturer and exporter, Camesa, and the period March 1, 1997 through February 28, 1998.

Product Comparisons

In accordance with section 771(16) of the Act, we considered all products produced by Camesa covered by the description in the ''Scope of Review'' section, above, and sold in the home market during the period of review (POR) to be foreign like products for the purposes of determining appropriate

product comparisons with U.S. sales. In the Product Concordance section (Appendix V) of the questionnaire, we provided the following hierarchy of product characteristics to be used for reporting identical and most similar comparisons of merchandise: (1) Type of steel wire (finishing type); (2) diameter of wire rope; (3) type of core; (4) class of wire rope; (5) grade of steel; (6) number of wires per strand; (7) design of strands; and (8) lay of rope.

Camesa requested that we limit its reporting of home market sales of steel wire rope during the POR because it made contemporaneous sales of models of rope in its home market that were identical to all of its models sold in the United States. Thus, it argued, the Department could conduct its analysis with these identical matches alone, and any other reported sales would be superfluous. We told Camesa that it could limit its reporting of home market sales to identical and a range of similar foreign like products sold during the POR, but that we might, at a later date, require the reporting of additional home market sales at short notice.[1] Petitioners objected, both before and after our decision, arguing that allowing limited reporting would prevent the identification of all possible matches of home market sales to U.S. sales. We later requested that Camesa expand its home market sales and cost reporting to include information on all models of steel wire rope belonging to the classes of rope sold in the United States. See memorandum to the file, dated September 25, 1998.

United States Price

We based United States price on export price (EP), as defined in section 772(a) of the Act, because the merchandise was sold directly by the exporter to unaffiliated U.S. purchasers prior to the date of importation, and because constructed export price was not indicated by other facts of record.

The Department calculated EP for Camesa based on packed, delivered prices to customers in the United States. We made deductions, where applicable, for domestic and foreign inland freight expenses, inland insurance, U.S. customs duties, and brokerage and handling in accordance with section 772(c)(2)(A). We added to U.S. price an amount for duty drawback received by Camesa.

Normal Value

Based on a comparison of the aggregate quantity of home market and U.S. sales, we determined, pursuant to section 773(a)(1)(B) of the Act, that the quantity of foreign like product sold in the home market was sufficient to permit a proper comparison with sales of the subject merchandise to the United States. Therefore, in accordance with section 773(a)(1)(B)(i) of the Act, we based NV on the price (exclusive of value-added tax (VAT)) at which the foreign like product was first sold for consumption in the home market, in the usual commercial quantities, and in the ordinary course of trade. Camesa made sales of subject merchandise both to unaffiliated and affiliated home market customers. None of the sales used for matches were sales to affiliated parties. Therefore, none of these sales were used in the margin calculation.

Camesa originally submitted its home market sales database on July 7, 1998. In response to our supplemental questionnaire, Camesa resubmitted the database on October 20, 1998. In our supplemental questionnaire we asked Camesa to revise its reporting of its database in two ways: (1) Expand its sales reporting as described above in the ''Product Camparisons'' section of this Notice; and (2) revise its home market database to include additional details regarding the physical characteristics of each product. We did not ask Camesa to recalculate any of the figures reported in the database. The October 20, 1998 submission, however, contained numerous discrepancies with data that had already been reported in the July 7th submission.

Because sufficient sales of identical merchandise reported in the original, July 7th submission, were found to be above cost, we did not need to rely on sales of similar merchandise reported in the October 20th submission in order to calculate a margin. Therefore, it was not necessary to rely on the expanded sales reporting of the October 20th database.

Because we did not need the additional sales reported in the October 20th database and because that database contained changes not requested by the Department,[2] we relied solely on the July 7th database for our calculations. We relied on the product characteristics reported in Appendix SB–4 of Camesa's October 20th submission to confirm that the home market products reported in the July 7th submission were in fact identical to those products sold to the United States.

Cost of Production Analysis

Section 773(b)(1) requires the Department to conduct a sales-below-cost investigation if it has reasonable grounds to believe or suspect sales below cost in the respondent's home market. According to section 773(b)(2)(A)(ii) of the Act, there are reasonable grounds to believe or suspect that sales in the home market have been made at below cost if sales were disregarded in a previous administrative review for having been at prices below cost. Therefore, because some of Camesa's home market sales were excluded from the margin calculation in the last review, after having been found to be at prices below cost, *Carbon Steel Wire Rope from Mexico, Final Results of Antidumping Duty Administrative Review*, 63 FR 46753 (Sept. 2, 1998), the Department is required to conduct a sales-below-cost investigation before determining a margin in this review. Accordingly, we requested and obtained from Camesa the cost data necessary to determine whether below-cost home market sales occurred during the current POR. Before making any NV comparisons for Camesa, we conducted the cost of production (COP) analysis described below.

In accordance with section 773(b)(3) of the Act, we calculated a weighted-average COP for each model sold in the home market based on the sum of Camesa's cost of materials and fabrication for the foreign like product (i.e., cost of manufacturing (COM)), plus amounts for home market general and administrative expenses (GNA), interest expenses, and indirect selling expenses. We relied on the COP data submitted by Camesa in its cost questionnaire response.

Camesa submitted cost data for each model reported for each month of the review period. For each model, we calculated a single weighted-average figure by weighting monthly COMs by the amount produced in each month.

We compared the weighted-average COPs for Camesa to home market sales of the foreign like product, as required under section 773(b) of the Act, in order to determine whether these sales had been made at prices below cost. On a product-specific basis, we compared COPs to home market prices, less discounts, movement expenses, direct selling expenses, and packing costs.

[1] Specifically, we originally asked for sales of all ''merchandise that is: (1) identical to the U.S. product; or (2) that is identical except that the merchandise is in the millimeter size just above or just below the size of the U.S. merchandise; and/or (3) that is identical to the U.S. product with respect to all product characteristics other than wire lay.'' See letter from Edward Yang, dated June 24, 1998.

[2] Section 351.301(b)(2) provides that with respect to administrative reviews, submission of unsolicited factual information is due no later than 140 days after the last day of the anniversary month. Included within respondents submission of October 20 was additional information not requested by the Department. Because this information was not requested and was untimely we rejected it.

In determining whether to disregard home market sales made at prices below cost, we examined whether such sales were made: (1) Within an extended period of time in substantial quantities; and (2) at prices which permitted the recovery of all costs within a reasonable period of time in the normal course of trade, in accordance with sections 773(b)(1)(A) and (B) of the Act. In accordance with section 773(b)(2)(C), where 20 percent or more of home market sales during the POR of a particular model were made at prices below cost we disregard the below-cost sales for the model because the sales were made in substantial quantities within an extended period and at prices that would not permit the recovery of all costs within a reasonable period of time, in accordance with section 773(b)(2)(D) of the Act.

When making price comparisons with U.S. sales, in accordance with section 771(16) of the Act, the Department considers all products sold in the home market within the ''Scope of Review'' and in the ordinary course of trade. If sales of identical merchandise in the home market are disregarded because they are sold below cost, or because they are otherwise not made in the ordinary course of trade, we compare U.S. sales to home market sales of the most similar foreign like products made in the ordinary course of trade. Product similarity is based on the characteristics listed in Sections B and C of our antidumping questionnaires. *See also* the section entitled ''Product Comparisons'' in this Notice.

Level of Trade

In accordance with section 773(a)(1)(B) of the Act, to the extent practicable, we determine NV based on sales in the comparison market at the same level of trade (LOT) as the U.S. transaction. The NV LOT is that of the starting-price sales in the comparison market or, when NV is based on constructed value, that of the sales from which we derive selling, general and administrative expenses and profit. For EP, the U.S. LOT is also the level of the starting-price sale, which is usually from exporter to importer. For CEP, it is the level of the constructed sale from the exporter to the importer.

To determine whether NV sales are at a different LOT than EP or CEP, we examine stages in the marketing process and selling functions along the chain of distribution between the producer and the unaffiliated customer. If the comparison-market sales are at a different LOT, and the difference affects price comparability, as manifested in a pattern of consistent price differences between the sales on which NV is based and comparison-market sales at the LOT of the export transaction, we make a LOT adjustment under section 773(a)(7)(A) of the Act. Finally, for CEP sales, if the NV level is more remote from the factory than the CEP level and there is no basis for determining whether the difference in the NV and CEP levels affects price comparability, we adjust NV under section 773(a)(7)(B) of the Act (the CEP offset provision). *See Notice of Final Determination of Sales at Less Than Fair Value: Certain Cut-to-Length Carbon Steel Plate From South Africa*, 62 FR 61731, 61732 (November 19, 1997).

Camesa did not claim a LOT adjustment; however, we requested information concerning Camesa's distribution system, including classes of customers, selling functions, and selling expenses, to determine whether such an adjustment was necessary. Camesa reported that all sales to the United States during the POR were to distributors, and sales in the comparison market, the home market in this case, were to industrial end users and distributors. After reviewing Camesa's response to our questions involving its sales functions in both channels of distribution in its home market and the United States, we preliminarily determine that sales in the home market and sales in the United States are at the same LOT, and that no adjustment is warranted. *See* Memorandum to the File (''Analysis Memo''), dated March 2, 1999.

Price-to-Price Comparisons

Pursuant to section 777A(d)(2), we compared the EPs of individual transactions to the monthly weighted-average prices (NV) of sales of the foreign like product made in the ordinary course of business. We based NVs on packed, delivered prices to unaffiliated purchasers in the home market. We made adjustments, where applicable, in accordance with section 773(a)(6) of the Act. Where applicable, we made adjustments to home market prices for discounts and inland movement expenses. We also made circumstance-of-sale adjustments for differences in credit and warranty expenses, pursuant to section 773(a)(6)(C)(iii) of the Act, by adding to NVs the amounts of U.S. credit and warranty expenses for each U.S. sale and subtracting the home market credit and warranty expenses. Similarly, in order to adjust for differences in packing expenses between the two markets, we increased home market price by U.S. packing costs and reduced it by home market packing costs. Prices were reported net of VAT and, therefore, no deduction for VAT was necessary.

Sales of Strand to a U.S. Affiliate

Pursuant to the affirmative final determination of circumvention of this antidumping duty order (*see Steel Wire Rope from Mexico: Affirmative Final Determination Circumvention of Antidumping Duty Order*, 60 FR 10831 (Feb. 28, 1995)), steel wire strand, when manufactured in Mexico by Camesa and imported into the United States for use in the production of steel wire rope, falls within the scope of the antidumping duty order on steel wire rope from Mexico.

In its October 20, 1998 supplemental questionnaire response, Camesa reported that during the POR all of its exports of steel wire strand to the United States were made to its U.S. subsidiary, Camesa, Inc. These strands consisted of three product types: prestressed concrete strand, post-tension tendon, and oilfield strands (DYCAM and swab lines). Camesa reports that these strands are not used by Camesa Inc. in the manufacture of steel wire rope and that they fall outside the scope of the circumvention order; thus we have preliminarily determined that they do not fall within the types of steel wire rope strand covered by the 1995 circumvention determination.

Preliminary Results of the Review

As a result of our comparison of EPs and NVs, we preliminarily determine that the following weighted-average dumping margin exists:

Exporter/manufacturer	Weighted-average margin percentage
Aceros Camesa S.A. de C.V. ...	0.00

Parties to the proceeding may request disclosure within 5 business days of the date of publication of this notice. Any interested party may request a hearing within 30 days of publication. Pursuant to 19 CFR 351.310(d), any hearing, if requested, will be held 37 days after the publication of this notice, or the first workday thereafter. Interested parties may submit case briefs within 30 days of the date of publication of this notice. Rebuttal briefs, which must be limited to issues raised in the case briefs, may be filed not later than 35 days after the date of publication. The Department will publish a notice of final results of this administrative review, which will include the results of its analysis of issues raised in any such comments, not later than 120 days after the date of publication of this notice.

Upon issuance of the final results of review, the Department shall determine, and the Customs Service shall assess, antidumping duties on all appropriate entries. If these preliminary results are adopted in our final results, we will instruct the U.S. Customs Service not to assess antidumping duties on the merchandise subject to review. Upon completion of this review, the Department will issue appraisement instructions directly to the Customs Service.

Furthermore, the following deposit rates will be effective upon publication of the final results of this administrative review for all shipments of steel wire rope products from Mexico entered, or withdrawn from warehouse, for consumption on or after the publication date, as provided for by section 751(a)(2)(c) of the Act: (1) the cash deposit rate for the reviewed company will be the rate established in the final results of this review; (2) for merchandise exported by manufacturers or exporters not covered in this review but covered in the original investigation of sales at less than fair value (LTFV) or a previous review, the cash deposit will continue to be the company-specific rate published for the most recent period; (3) if the exporter is not a firm covered in this or a previous review, or the original LTFV investigation, but the manufacturer is, the cash deposit rate will be the rate established for the most recent period for the manufacturer of the merchandise; and (4) for all other producers and/or exporters of this merchandise, the cash deposit rate shall be 111.68 percent, the ''all others'' rate established in the LTFV investigation (58 FR 7531, February 8, 1993).

These deposit rates, when imposed, shall remain in effect until publication of the final results of the next administrative review.

This notice also serves as a preliminary reminder to importers of their responsibility under 19 CFR 351.402(f) to file a certificate regarding the reimbursement of antidumping duties prior to liquidation of the relevant entries during this review period. Failure to comply with this requirement could result in the Secretary's presumption that reimbursement of antidumping duties occurred and the subsequent assessment of double antidumping duties.

This administrative review and notice are issued and published in accordance with sections 751(a)(1) of the Act (19 U.S.C. 1675(a)) and 19 CFR 351.213.

Dated: February 26, 1999.

Robert S. LaRussa,

Assistant Secretary for Import Administration.

[FR Doc. 99–5629 Filed 3–5–99; 8:45 am]

BILLING CODE 3510–DS–P

DEPARTMENT OF COMMERCE

International Trade Administration

[A–570–002]

Chloropicrin From the People's Republic of China: Extension of Time Limit for Final Results of Five-Year Review

AGENCY: Import Administration, International Trade Administration, Department of Commerce.

ACTION: Notice of extension of time limit for final results of five-year (''sunset'') review.

SUMMARY: The Department of Commerce (''the Department'') is extending the time limit for the final results of the sunset review on the antidumping duty order on chloropicrin from the People's Republic of China. Based on adequate response from domestic interested parties and inadequate response (in this case no response) from respondent interested parties, the Department is conducting an expedited sunset review to determine whether revocation of the order would be likely to lead to continuation or recurrence of dumping. As a result of this extension, the Department intends to issue its final results not later than June 1, 1999.

EFFECTIVE DATE: March 8, 1999.

FOR FURTHER INFORMATION CONTACT: Scott E. Smith or Melissa G. Skinner, Import Administration, International Trade Administration, U.S. Department of Commerce, Pennsylvania Avenue and 14th Street, N.W., Washington, D.C. 20230; telephone: (202) 482–6397, or (202) 482–1560 respectively.

Extension of Final Results

The Department has determined that the sunset review of the antidumping duty order on chloropicrin from the People's Republic of China are extraordinarily complicated. In accordance with section 751(c)(5)(C)(v) of the Tariff Act of 1930, as amended (''the Act''), the Department may treat a review as extraordinarily complicated if it is a review of a transition order (*i.e.*, an order in effect on January 1, 1995). *See* section 751(c)(6)(C) of the Act. The Department is extending the time limit for completion of the final results of this review until not later than June 1, 1999, in accordance with section 751(c)(5)(B) of the Act.

Dated: March 2, 1999.

Robert S. LaRussa,

Assistant Secretary for Import Administration.

[FR Doc. 99–5635 Filed 3–5–99; 8:45 am]

BILLING CODE 3510–DS–P

DEPARTMENT OF COMMERCE

International Trade Administration

[A–580–815 & A–580–816]

Certain Cold-Rolled Carbon Steel Flat Products and Certain Corrosion-Resistant Carbon Steel Flat Products From Korea: Extension of Time Limit

AGENCY: Import Administration, International Trade Administration, Department of Commerce.

ACTION: Notice of extension of time limit.

SUMMARY: The Department of Commerce (the Department) is extending the time limit for the preliminary results of the antidumping duty administrative reviews of Certain Cold-Rolled Carbon Steel Flat Products & Certain Corrosion-Resistant Carbon Steel Flat Products from Korea. These reviews cover the period August 1, 1997 through July 31, 1998.

EFFECTIVE DATE: March 8, 1999.

FOR FURTHER INFORMATION CONTACT: Becky Hagen or Jim Doyle, Office of AD/CVD Enforcement, Group III, Import Administration, International Trade Administration, U.S. Department of Commerce, 14th Street and Constitution Avenue, N.W., Washington, D.C.; telephone (202) 482–1102 or 482–0159, respectively.

SUPPLEMENTARY INFORMATION: Due to the complexity of issues involved in these cases, it is not practicable to complete these reviews within the original time limit. The Department is extending the time limit for completion of the preliminary results from May 3, 1999 until August 31, 1999, in accordance with Section 751(a)(3)(A) of the Tariff Act of 1930, as amended. See memorandum to Robert S. LaRussa from Joseph A. Spetrini regarding the extension of the case deadline. The time limit for the final results would remain at 120 days after the preliminary results are issued.

This extension is in accordance with section 751(a)(3)(A) of the Tariff Act of 1930, as amended (19 U.S.C. § 1675 (a)(3)(A)).

Dated: March 1, 1999.

Joseph A. Spetrini,

Deputy Assistant Secretary, Enforcement Group III.

[FR Doc. 99–5630 Filed 3–5–99; 8:45 am]

BILLING CODE 3510–DS–P

DEPARTMENT OF COMMERCE

International Trade Administration

[A–122–047]

Elemental Sulphur From Canada: Extension of Time Limit for Final Results of the Antidumping Duty Administrative Review

AGENCY: Import Administration, International Trade Administration, Department of Commerce.

ACTION: Notice of extension of time limit for final results of antidumping duty administrative review.

SUMMARY: The Department of Commerce (''the Department'') is extending the time limit for the final results of the review of elemental sulphur from Canada. This review covers the period December 1, 1996 through November 30, 1997. The preliminary results of this review were published in the **Federal Register** on January 6, 1999 (64 FR 848).

EFFECTIVE DATE: March 8, 1999.

FOR FURTHER INFORMATION CONTACT: Brandon Farlander or Rick Johnson at (202) 482–0182 or (202) 482–3818, respectively; Office of AD/CVD Enforcement, Group III, Import Administration, International Trade Administration, U.S. Department of Commerce, 14th Street and Constitution Avenue, NW, Washington, DC 20230.

The Applicable Statute

Unless otherwise indicated, all citations to the Tariff Act of 1930 (''the Act'') are references to the provisions effective January 1, 1995, the effective date of the amendments made to the Act by the Uruguay Round Agreements Act.

Extension of Final Results

The Department has determined that it is not practicable to issue its final results within the original time limit. *See* Decision Memorandum from Joseph A. Spetrini, Deputy Assistant Secretary, Enforcement Group III to Robert LaRussa, Assistant Secretary for Import Administration, February 26, 1999. The Department is extending the time limit for completion of the final results until July 6, 1999, in accordance with Section 751(a)(3)(A) of the Act.

Dated: March 1, 1999.

Joseph A. Spetrini,

Deputy Assistant Secretary for Enforcement Group III.

[FR Doc. 99–5627 Filed 3–5–99; 8:45 am]

BILLING CODE 3510–DS–P

DEPARTMENT OF COMMERCE

International Trade Administration

[A–791–802]

Furfuryl Alcohol From the Republic of South Africa; Preliminary Results of Antidumping Duty Administrative Review and Intent To Revoke Order in Part

AGENCY: Import Administration, International Trade Administration, Department of Commerce.

ACTION: Notice of preliminary results of antidumping duty administrative review and intent to revoke order in part.

SUMMARY: In response to a request by the respondent, Illovo Sugar Ltd., the Department of Commerce is conducting an administrative review of the antidumping duty order on furfuryl alcohol from the Republic of South Africa. The review covers one manufacturer/exporter of the subject merchandise to the United States. The period of review is June 1, 1997, through May 31, 1998.

We preliminarily find that sales have not been made below normal value. If these preliminary results are adopted in our final results of administrative review, we will instruct the Customs Service to assess no antidumping duties on the subject merchandise exported by Illovo Sugar Ltd. Furthermore, if these preliminary results are adopted in our final results of this administrative review, we intend to revoke the antidumping duty order with respect to Illovo Sugar Ltd., based on three consecutive review periods of sales at not less than normal value. *See Intent to Revoke* section of this notice.

Interested parties are invited to comment on these preliminary results. Parties who submit case briefs in this proceeding are requested to provide, for each comment: (1) a statement of the issue; and (2) a brief summary of the argument.

EFFECTIVE DATE: March 8, 1999.

FOR FURTHER INFORMATION CONTACT: Charles Riggle or Kris Campbell, AD/CVD Enforcement Group I, Import Administration, International Trade Administration, U.S. Department of Commerce, 14th Street and Constitution Avenue, Washington, DC 20230; telephone: (202) 482–0650 or 482–3813, respectively.

SUPPLEMENTARY INFORMATION:

The Applicable Statute and Regulations

Unless otherwise indicated, all citations to the Tariff Act of 1930, as amended (the Act), are references to the provisions effective January 1, 1995, the effective date of the amendments made to the Act by the Uruguay Round Agreements Act (URAA). In addition, unless otherwise indicated, all citations to the Department of Commerce's (the Department's) regulations are to the regulations codified at 19 CFR Part 351 (1998).

Background

On June 21, 1995, the Department published in the **Federal Register** (60 FR 32302) the antidumping duty order on furfuryl alcohol from the Republic of South Africa. On June 10, 1998, the Department published a notice of ''Opportunity to Request an Administrative Review'' (63 FR 31717) of this antidumping duty order for the period June 1, 1997, through May 31, 1998. On June 22, 1998, we received a timely request for review from Illovo Sugar Ltd. (ISL) and Harborchem, ISL's related selling agent in the United States. In addition, ISL requested that the Department revoke the antidumping duty order with respect to ISL. On July 28, 1998, we published the notice of initiation of this review (63 FR 40258).

We issued a questionnaire to ISL on July 24, 1998, followed by a supplemental questionnaire on October 27, 1998. Because ISL requested revocation of the order, the Department verified the company's response pursuant to section 782(i)(2) of the Act.

Scope of Review

The merchandise covered by this order is furfuryl alcohol ($C_4H_3OCH_2OH$). Furfuryl alcohol is a primary alcohol and is colorless or pale yellow in appearance. It is used in the manufacture of resins and as a wetting agent and solvent for coating resins, nitrocellulose, cellulose acetate, and other soluble dyes. The product subject to this order is classifiable under subheading 2932.13.00 of the Harmonized Tariff Schedule of the United States (HTSUS). Although the HTSUS subheading is provided for convenience and customs purposes, our written description of the scope of this proceeding is dispositive.

Verification

As provided in section 782(i)(2) of the Act, we verified information provided by ISL and Harborchem. We used

standard verification procedures, including on-site inspection of the manufacturer's facilities and examination of relevant sales and financial records. Our verification results are outlined in the verification reports placed in the case file.

Comparisons

We compared the constructed export price (CEP) to the normal value, as described in the *Constructed Export Price* and *Normal Value* sections of this notice. Pursuant to section 777A(d)(2) of the Act, we compared the CEPs of individual transactions to contemporaneous monthly weighted-average prices of sales of the foreign like product. We were able to compare all subject merchandise sold during the POR to identical merchandise sold in the home market.

Constructed Export Price

For sales to the United States, we calculated a CEP as defined in section 772(b) of the Act because we determined that ISL is affiliated with its exclusive U.S. agent, Harborchem, and because the subject merchandise was sold to unaffiliated U.S. purchasers after the date of importation. Our finding that ISL and Harborchem are affiliated is consistent with our findings in the less-than-fair-value (LTFV) investigation and in the first and second administrative reviews. *See Final Determination of Sales at Less Than Fair Value: Furfuryl Alcohol from the Republic of South Africa*, 60 FR 22550, 22552 (Comment 1) (May 8, 1995) and *Notice of Final Results of Antidumping Duty Review: Furfuryl Alcohol from the Republic of South Africa*, 62 FR 61084, 61087–88 (Comment 5) (November 14, 1997)).

We calculated CEP based on f.o.b. and delivered prices to unaffiliated purchasers in the United States. We made deductions, where applicable, for foreign inland movement expenses (including foreign warehousing and warehousing insurance), domestic brokerage and handling, ocean freight, marine insurance, U.S. brokerage and handling, U.S. inland freight expenses (offset by freight revenue), U.S. warehousing and insurance, and quality testing,[1] in accordance with section 772(c)(2)(A) of the Act.

In accordance with section 772(d)(1) of the Act we also deducted direct selling expenses and indirect selling expenses associated with commercial activity in the United States. These include credit expenses, inventory carrying costs, and other indirect selling expenses.

Finally, in accordance with section 772(d)(3) of the Act, we deducted an amount for profit allocated to direct, indirect, and imputed selling expenses associated with commercial activity in the United States.

No other adjustments to CEP were claimed or allowed.

Normal Value

In order to determine whether there was a sufficient volume of sales in the home market to serve as a viable basis for calculating normal value, we compared ISL's volume of home market sales of the foreign like product to the volume of its U.S. sales of the subject merchandise. Pursuant to section 773(a)(1) of the Act, because ISL's aggregate volume of home market sales of the foreign like product was greater than 5 percent of its aggregate volume of U.S. sales of the subject merchandise, we determined that the home market was viable.

We based normal value on the price at which the foreign like product was first sold for consumption in South Africa, in the usual commercial quantities, in the ordinary course of trade, and at the same level of trade as the CEP,[2] in accordance with section 773(a)(1)(B)(i) of the Act. We made deductions from the starting price for home market packing and movement expenses in accordance with sections 773(a)(6)(B)(i) and (ii) of the Act. Pursuant to section 773(a)(6)(C)(iii) of the Act, we made a circumstance-of-sale (COS) adjustment to normal value by deducting home market credit expenses.

No other adjustments to normal value were claimed or allowed.

Intent To Revoke

On June 22, 1998, ISL requested that, pursuant to 19 CFR 351.222(b), ''the Department revoke the antidumping duty finding in the above-referenced proceeding with respect to Illovo at the conclusion of this administrative review.'' ISL submitted along with its revocation request a certification stating that: (1) the company sold subject merchandise at not less than normal value during the POR, and that in the future it would not sell such merchandise at less than normal value (see 19 CFR 351.222(e)(i)); and (2) the company has sold the subject merchandise to the United States in commercial quantities during each of the past three years (see 19 CFR 351.222(e)(ii)). ISL further stated in its revocation request that, because it was the sole producer/reseller of subject merchandise, it was not required to submit an additional certification (as set forth at 19 CFR 351.222(b)(iii), and as referenced at 19 CFR 351.222(e)(iii)) agreeing to its immediate reinstatement in the order, as long as any exporter or producer is subject to the order, if the Department concludes that the company, subsequent to revocation, sold the subject merchandise at less than normal value. However, because record evidence indicates that a South African company unrelated to ISL has exported the subject merchandise to the United States under the order, ISL has now provided this certification at the Department's request.

Based on the preliminary results in this review and the final results of the two preceding reviews (*see Notice of Final Results of Antidumping Duty Review: Furfuryl Alcohol from the Republic of South Africa*, 62 FR 61084 (November 14, 1997) and *Notice of Final Results of Antidumping Duty Review: Furfuryl Alcohol from the Republic of South Africa*, 63 FR 30473 (June 4, 1998)), ISL has preliminarily demonstrated three consecutive years of sales at not less than normal value. Furthermore, ISL's aggregate sales to the United States have been made in commercial quantities during all segments of this proceeding. Based on the above facts and absent any evidence to the contrary, the Department preliminarily determines that it is not likely in the future that ISL will sell the subject merchandise in the United States at less than normal value. Therefore, if these preliminary findings are affirmed in our final results, we intend to revoke the order with respect to merchandise produced and exported by ISL. In accordance with 19 CFR 351.222 (f), we will terminate the suspension of liquidation for any such merchandise entered, or withdrawn from warehouse, for consumption on or after June 1, 1998, and will instruct Customs to release any cash deposit.

Currency Conversion

We made currency conversions based on the exchange rates in effect on the dates of the U.S. sales as certified by the Federal Reserve Bank of New York. Section 773A(a) of the Act directs the Department to use a daily exchange rate

[1] Consistent with the 1994–96 Final Results (62 FR 61084, 61091 (Comment 9)), we have determined that quality testing expenses incurred by ISL are movement expenses that the company incurs upon the arrival of the subject merchandise at the U.S. port of entry. The testing is performed at the time the product is unloaded from the maritime vessel in order to detect any impurities that may have entered the product while in transit.

[2] The record evidence before us in this review indicates that the home market and the CEP levels of trade have not changed from the 1994–96 Review. *See* 62 FR 61084, 61089–90 (Comment 7). Furthermore, in this review, unlike the prior segments of the proceeding, ISL has not claimed entitlement to a CEP offset.

in order to convert foreign currencies into U.S. dollars, unless the daily rate involves a ''fluctuation.'' In accordance with our practice, we have determined as a general matter that a fluctuation exists when the daily exchange rate differs from a benchmark by 2.25 percent. The benchmark is defined as the rolling average of rates for the past 40 business days. When we determine a fluctuation exists, we substitute the benchmark for the daily rate. *See Policy Bulletin 96–1 Currency Conversions*, 61 FR 9434 (March 8, 1996).

Preliminary Results of Review

As a result of this review, we preliminarily determine that the following margin exists for the period June 1, 1997–May 31, 1998:

Manufacturer/exporter	Margin (percent)
Illovo Sugar Ltd	0.00

Interested parties may submit case briefs within 30 days of the date of publication of this notice. Rebuttal briefs, which must be limited to issues raised in the case briefs, may be filed not later than five days after the date after the submission of the case briefs. Any interested party may request a hearing within 30 days of publication of this notice. Any hearing, if requested, will be held two days after the submission of rebuttal briefs, or the first workday thereafter. The Department will issue a notice of the final results of this administrative review, which will include the results of its analysis of issues raised in any briefs, within 120 days from the publication of these preliminary results.

The Department shall determine, and the Customs Service shall assess, antidumping duties on all appropriate entries. If these preliminary results are adopted in our final results, we will instruct the Customs Service to assess no antidumping duties on the merchandise subject to review. Upon completion of this review, the Department will issue appraisement instructions directly to the Customs Service.

Furthermore, the following deposit requirements will be effective upon completion of the final results of this administrative review for all shipments of furfuryl alcohol from the Republic of South Africa entered, or withdrawn from warehouse, for consumption on or after the publication date of the final results of this administrative review, as provided by section 751(a)(2)(c) of the Act: (1) no cash deposit will be required for merchandise produced and exported by ISL if we revoke the order with respect to merchandise produced and exported by ISL; (2) if the exporter is not a firm covered in this review, the previous review, or the original LTFV investigation, but the manufacturer is, the cash deposit rate will be the rate established for the most recent period for the manufacturer of the merchandise; and (3) if neither the exporter nor the manufacturer is a firm covered in this or any previous review conducted by the Department, the cash deposit rate will be 11.55 percent, the ''All Others'' rate established in the LTFV investigation.

These cash deposit requirements, when imposed, shall remain in effect until publication of the final results of the next administrative review.

This notice serves as a preliminary reminder to importers of their responsibility under 19 CFR 351.402(f)(2) to file a certificate regarding the reimbursement of antidumping duties prior to liquidation of the relevant entries during this review period. Failure to comply with this requirement could result in the Secretary's presumption that reimbursement of antidumping duties occurred and the subsequent assessment of double antidumping duties.

This administrative review and notice are in accordance with sections 751(a)(1) and 771(i)(1) of the Act.

Dated: March 2, 1999.

Robert S. LaRussa,

Assistant Secretary for Import Administration.

[FR Doc. 99–5626 Filed 3–5–99; 8:45 am]

BILLING CODE 3510–DS–P

DEPARTMENT OF COMMERCE

International Trade Administration

[A–570–101]

Greige Polyester Cotton Printcloth From the People's Republic of China: Extension of Time Limit for Final Results of Five-Year Review

AGENCY: Import Administration, International Trade Administration, Department of Commerce.

ACTION: Notice of extension of time limit for final results of five-year (''sunset'') review.

SUMMARY: The Department of Commerce (''the Department'') is extending the time limit for the final results of the sunset review on the antidumping duty order on greige polyester cotton printcloth from the People's Republic of China. Based on adequate response from domestic interested parties and inadequate response (in this case no response) from respondent interested parties, the Department is conducting an expedited sunset review to determine whether revocation of the order would be likely to lead to continuation or recurrence of dumping. As a result of this extension, the Department intends to issue its final results not later than June 1, 1999.

EFFECTIVE DATE: March 8, 1999.

FOR FURTHER INFORMATION CONTACT: Scott E. Smith or Melissa G. Skinner, Import Administration, International Trade Administration, U.S. Department of Commerce, Pennsylvania Avenue and 14th Street, N.W., Washington, D.C. 20230; telephone: (202) 482–6397, or (202) 482–1560 respectively.

Extension of Final Results

The Department has determined that the sunset review of the antidumping duty order on greige polyester cotton printcloth from the People's Republic of China are extraordinarily complicated. In accordance with section 751(c)(5)(C)(v) of the Tariff Act of 1930, as amended (''the Act''), the Department may treat a review as extraordinarily complicated if it is a review of a transition order (*i.e.*, an order in effect on January 1, 1995). *See* section 751(c)(6)(C) of the Act. The Department is extending the time limit for completion of the final results of this review until not later than June 1, 1999, in accordance with section 751(c)(5)(B) of the Act.

Dated: March 2, 1999.

Robert S. LaRussa,

Assistant Secretary for Import Administration.

[FR Doc. 99–5634 Filed 3–5–99; 8:45 am]

BILLING CODE 3510–DS–P

DEPARTMENT OF COMMERCE

International Trade Administration

[A–122–503, A–351–503, A–570–502]

Iron Construction Castings From Canada, Brazil and the People's Republic of China: Extension of Time Limit for Final Results of Five-Year Review

AGENCY: Import Administration, International Trade Administration, Department of Commerce.

ACTION: Notice of extension of time limit for final results of five-year (''sunset'') review.

SUMMARY: The Department of Commerce (''the Department'') is extending the time limit for the final results of the

sunset reviews on the antidumping duty orders on iron construction castings from Canada, Brazil and the People's Republic of China. Based on adequate responses from domestic interested parties and inadequate response (in these cases, no response) from respondent interested parties, the Department is conducting expedited sunset reviews to determine whether revocation of the orders would be likely to lead to continuation or recurrence of dumping. As a result of this extension, the Department intends to issue its final results not later than June 1, 1999.

EFFECTIVE DATE: March 8, 1999.

FOR FURTHER INFORMATION CONTACT: Martha V. Douthit or Melissa G. Skinner, Import Administration, International Trade Administration, U.S. Department of Commerce, Pennsylvania Avenue and 14th Street, N.W., Washington, D.C. 20230; telephone: (202) 482–3207, or (202) 482–1560 respectively.

Extension of Final Results

The Department has determined that the sunset reviews of the antidumping duty orders on iron construction castings from Canada, Brazil, and the People's Republic of China are extraordinarily complicated. In accordance with section 751(c)(5)(C)(v) of the Tariff Act of 1930, as amended (''the Act''), the Department may treat a review as extraordinarily complicated if it is a review of a transition order (i.e., an order in effect on January 1, 1995). See section 751(c)(6)(C) of the Act. The Department is extending the time limit for completion of the final results of these review until not later than June 1, 1999, in accordance with section 751(c)(5)(B) of the Act.

Dated: March 2, 1999.

Robert S. LaRussa,

Assistant Secretary for Import Administration.

[FR Doc. 99–5636 Filed 3–5–99; 8:45 am]

BILLING CODE 3510–DS–P

DEPARTMENT OF COMMERCE

International Trade Administration

[A–570–840]

Manganese Metal From the People's Republic of China; Preliminary Results and Partial Recission of Antidumping Administrative Review

AGENCY: Import Administration, International Trade Administration, Department of Commerce.

ACTION: Notice of preliminary results and partial rescission of antidumping duty administrative review of manganese metal from the People's Republic of China.

SUMMARY: We have preliminarily determined that sales by China Metallurgical Import & Export Hunan Corporation/Hunan Nonferrous Metals Import & Export Associated Corporation have been made below normal value during the period of review of February 1, 1997, through January 31, 1998. Because we were unable to verify that China Hunan International Economic Development Corporation reported all of its U.S. sales during the period of review, we have preliminarily determined to apply adverse facts available in calculating the dumping margins for this exporter of the subject merchandise. If these preliminary results are adopted in our final results of review, we will instruct the U.S. Customs Service to assess antidumping duties based on the difference between the export price and normal value on all appropriate entries.

We have also determined that the review of China National Electronics Import and Export Hunan Company and Minmetals Precious & Rare Minerals Import & Export Corporation should be rescinded.

We invite interested parties to comment on these preliminary results.

EFFECTIVE DATE: March 8, 1999.

FOR FURTHER INFORMATION CONTACT: Greg Campbell or Craig Matney, Office I, Antidumping/Countervailing Duty Enforcement, Import Administration, International Trade Administration, U.S. Department of Commerce, 14th Street and Constitution Avenue NW., Washington, DC 20230; telephone (202) 482–2239 or (202) 482–1778, respectively.

SUPPLEMENTARY INFORMATION:

Applicable Statute

Unless otherwise indicated, all citations to the Tariff Act of 1930, as amended (the Act), are references to the provisions effective January 1, 1995, the effective date of the amendments made to the Act by the Uruguay Round Agreements Act (URAA). In addition, all references to the Department's regulations are to 19 CFR part 351 (April 1998).

Background

On February 6, 1996, the Department of Commerce (the Department) published in the **Federal Register** the antidumping duty order on manganese metal from the People's Republic of China (PRC). *See Notice of Amended Final Determination and Antidumping Duty Order: Manganese Metal from the People's Republic of China,* 61 FR 4415 (February 6, 1996) (*LTFV Investigation*). In accordance with 19 CFR 351.213(b)(2), on February 9, 1998, Elkem Metals Company and Kerr-McGee Chemical Corporation (the petitioners) requested that we conduct an administrative review of this order. On March 23, 1998, in accordance with 19 CFR 351.213(c)(3), we published a notice of initiation of this antidumping duty administrative review. *See* 63 FR 13837. On November 9, 1998, we published a notice of extension of time limit for the preliminary results. *See* 63 FR 60303.

The Department is conducting this administrative review in accordance with section 751 of the Act. The period of review (POR) is February 1, 1997 through January 31, 1998.

Scope of Review

The merchandise covered by this review is manganese metal, which is composed principally of manganese, by weight, but also contains some impurities such as carbon, sulfur, phosphorous, iron and silicon. Manganese metal contains by weight not less than 95 percent manganese. All compositions, forms and sizes of manganese metal are included within the scope of this administrative review, including metal flake, powder, compressed powder, and fines. The subject merchandise is currently classifiable under subheadings 8111.00.45.00 and 8111.00.60.00 of the Harmonized Tariff Schedule of the United States (HTSUS). Although the HTSUS subheadings are provided for convenience and customs purposes, our written description of the scope of this proceeding is dispositive.

Partial Rescission

China National Electronics Import and Export Hunan Company (CEIEC) notified the Department that it had not made any U.S. sales of subject merchandise during the POR. Entry data provided by the U.S. Customs Service confirms that there were no POR entries from CEIEC of manganese metal.

Minmetals Precious & Rare Minerals Import & Export Corporation (Minmetals) reported one sale which, based on the date of commercial invoice, was made during the previous POR but which Minmetals believes would have entered the United States during the POR. However, the U.S. Customs data, for both the 1995/97 review period and this review period, indicates that this sale was never entered into the United States. Moreover, neither Minmetals nor the Department has been able to identify

any other customs entries which apparently correspond to this sale. Thus, even if the Department were to calculate a margin for Minmetals, there would be no entry on which to assess the resulting duty.

Therefore, consistent with the Department's practice, we are rescinding this review with respect to Minmetals and CEIEC. *See Silicon Metal from Brazil; Final Results of Antidumping Duty Administrative Review*, 61 FR 46763 (September 5, 1996).

Verification

As provided in section 782(i) of the Act, we verified factor information provided by Xiang Tan Huan Yu Metallurgical Products Plant (Huan Yu). We also conducted sales verifications at China Hunan International Economic Development Corporation (HIED), China Metallurgical Import & Export Hunan Corporation/Hunan Nonferrous Metals Import & Export Associated Corporation (CMIECHN/CNIECHN), and Minmetals. Our verification at each of these companies consisted of standard verification procedures, including the examination of relevant sales and financial records and the selection of original documentation containing relevant information. Our verification results are detailed in the verification reports on file in the Central Records Unit (CRU) in room B–099 of the Department's main building.

Separate Rates

It is the Department's standard policy to assign all exporters of the merchandise subject to review in non-market-economy (NME) countries a single rate unless an exporter can demonstrate an absence of government control, both in law and in fact, with respect to exports. To establish whether an exporter is sufficiently independent of government control to be entitled to a separate rate, the Department analyzes the exporter in light of the criteria established in the *Final Determination of Sales at Less Than Fair Value: Sparklers from the People's Republic of China*, 56 FR 20588 (May 6, 1991) (*Sparklers*), as amplified in the *Final Determination of Sales at Less Than Fair Value: Silicon Carbide from the People's Republic of China*, 59 FR 22585 (May 2, 1994) (*Silicon Carbide*). Evidence supporting, though not requiring, a finding of *de jure* absence of government control over export activities includes: (1) an absence of restrictive stipulations associated with an individual exporter's business and export licenses; (2) any legislative enactments decentralizing control of companies; and (3) any other formal measures by the government decentralizing control of companies. *See Sparklers* at 20589. A *de facto* analysis of absence of government control over exports is based on four factors—whether the respondent: (1) sets its own export prices independent from the government and other exporters; (2) can retain the proceeds from its export sales; (3) has the authority to negotiate and sign contracts; and (4) has autonomy from the government regarding the selection of management. *See Silicon Carbide* at 22587; *see also Sparklers* at 20589.

In our final LTFV determination, we determined that there was *de jure* and *de facto* absence of government control of each company's export activities and determined that each company warranted a company-specific dumping margin. *See LTFV Investigation*. For this period of review, HIED, CMIECHN/CNIECHN and Minmetals have responded to the Department's request for information regarding separate rates. We have found that the evidence on the record is consistent with the final determination in the *LTFV Investigation* and continues to demonstrate an absence of government control, both in law and in fact, with respect to these companies' exports, in accordance with the criteria identified in *Sparklers* and *Silicon Carbide*.

Export Price

For those U.S. sales made by CMIECHN/CNIECHN and which we verified, we calculated an export price, in accordance with section 772(a) of the Act, because the subject merchandise was sold to unrelated purchasers in the United States prior to importation into the United States and constructed export price treatment was not otherwise indicated.

For these sales, we calculated export price based on the price to unaffiliated purchasers. We deducted an amount, where appropriate, for foreign inland freight, ocean freight, and marine insurance.[1] The costs for these items were valued in the surrogate country.

In addition to these verified sales, U.S. Customs entry data for the POR indicate that many more shipments of manganese metal listing CMIECHN/CNIECHN as the manufacturer/exporter were entered into the United States than the number of CMIECHN/CNIECHN's verified U.S. sales.[2] The verified sales represent less than five percent of the total value of POR entries listing CMIECHN/CNIECHN as the manufacturer/exporter. Based upon our verification of CMIECHN/CNIECHN's total U.S. sales, we have preliminarily determined that these additional entries are not U.S. sales by CMIECHN/CNIECHN for the purposes of this review. We will, however, continue to examine the circumstances surrounding these entries identifying CMIECHN/CNIECHN as the exporter. We note that CMIECHN/CNIECHN has asked the U.S. Customs Service to investigate potential customs fraud involving entries of manganese metal during the POR. We will reconsider, in the final results of review, our preliminary determination that CMIECHN/CNIECHN was not the exporter of these additional entries in the event that any substantive new information on the matter, including any potential determination by the Customs Service regarding alleged customs fraud, becomes available.

Given our preliminary determination that these additional entries are not CMIECHN/CNIECHN sales for the purposes of this review, we have not calculated an export price for these entries. Also, for the reasons enumerated in the *Use of Facts Otherwise Available* section below, we likewise have not calculated an export price for HIED's sales.

Normal Value

1. Non-Market-Economy Status

For companies located in NME countries, section 773(c)(1) of the Act provides that the Department shall determine normal value (NV) using a factors-of-production methodology if (1) the merchandise is exported from an NME country, and (2) the information does not permit the calculation of NV using home-market prices, third-country prices, or constructed value under section 773(a) of the Act.

The Department has treated the PRC as an NME country in all previous antidumping cases. In accordance with section 771(18)(C)(i) of the Act, any determination that a foreign country is an NME country shall remain in effect until revoked by the administering authority.

None of the parties to this proceeding has contested such treatment in this

[1] For a detailed discussion of how we derived net export price and constructed value, *see Memorandum to the Case File; Calculations for the Preliminary Results of Review for CMIECHN/CNIECHN* (March 2, 1999), a public version of which is available in room B–099 of the Department's main building.

[2] The Department initially requested this Customs data to verify the claims of non-shipment by CEIEC (*see Partial Rescission* section above). This request for entry data was also responsive to concerns expressed by the petitioners that many more shipments of manganese metal had entered the United States during the POR than were reported as sales by the respondents.

review. Furthermore, available information does not permit the calculation of NV using home-market prices, third-country prices or constructed value under section 773(a) of the Act. Therefore, we treated the PRC as an NME country for purposes of this review and calculated NV by valuing the factors of production in a comparable market-economy country which is a significant producer of comparable merchandise.

2. Surrogate-Country Selection

In accordance with section 773(c)(4) of the Act and section 351.408(b) of our regulations, we preliminarily determine that India is comparable to the PRC. In addition, India is a significant producer of comparable merchandise. Therefore, for this review, we have selected India as the surrogate country and have used publicly available information relating to India, unless otherwise noted, to value the various factors of production. (*See Memorandum to Susan Kuhbach from Jeff May; Non-Market-Economy Status and Surrogate Country Selection* (June 23, 1998), a public copy of which is available in the Central Records Unit.)

3. Factors-of-Production Valuation

For purposes of calculating NV, we valued PRC factors of production, in accordance with section 773(c)(1) of the Act. Factors of production include but are not limited to the following elements: (1) hours of labor required; (2) quantities of raw materials employed; (3) amounts of energy and other utilities consumed; and (4) representative capital cost, including depreciation. In examining potential surrogate values, we selected, where possible, the publicly available value which was: (1) an average non-export value; (2) representative of a range of prices within the POR or most contemporaneous with the POR; (3) product-specific; and (4) tax-exclusive. Where we could not obtain a POR-representative price for an appropriate surrogate value, we selected a value in accordance with the remaining criteria mentioned above and which was the closest in time to the POR. For a more detailed explanation of the methodology used in calculating various surrogate values, *see Memorandum to the File from Case Team; Calculations for the Preliminary Results* (March 2, 1999). In accordance with this methodology, we have valued the factors as described below.

We valued manganese ore using a June 1998 export price quote (in U.S. dollars) from a Brazilian manganese mine for manganese carbonate ore. Consistent with our methodology used in the first administrative review of the order on manganese metal from the PRC, this price was adjusted to reflect the decline in manganese ore world prices since the POR. *See Manganese Metal from the PRC; Final Results and Partial Rescission of Antidumping Duty Administrative Review*, 63 FR 12440, 12442 (March 13, 1998). We adjusted this price further to account for the reported manganese content of the ore used in the PRC manufacture of the subject merchandise and to account for the differences in transportation distances.

To value various process chemicals used in the production of manganese metal, we used prices obtained from the following Indian sources: *Indian Chemical Weekly* (February 1997 through November 1997); the *Monthly Statistics of Foreign Trade of India, Volume II—Imports* (February through May 1997) (*Import Statistics*); price quotes from Indian chemicals producers, and the *1995 Indian Minerals Yearbook (IMY)*. Where necessary, we adjusted these values to reflect inflation up to the POR using an Indian WPI published by the International Monetary Fund (IMF). Additionally, we adjusted these values, where appropriate, to account for differences in chemical content and to account for freight costs incurred between the suppliers and manganese metal producers.

To value the labor input, consistent with 19 CFR 351.408(c)(3), we used the regression-based estimated wage rate for the PRC as calculated by the Department.

For selling, general, and administrative expenses (SG&A), factory overhead, and profit values, we used information from the *Reserve Bank of India Bulletin* (January 1997) for the Indian industrial grouping ''Processing and Manufacturing: Metals, Chemicals, and Products Thereof.'' To value factory overhead, we calculated the ratio of factory overhead expenses to the cost of materials and energy. Using the same source, we also calculated the SG&A expense as a percentage of the cost of materials, energy and factory overhead and profit as a percentage of the cost of production (*i.e.*, materials, energy, labor, factory overhead and SG&A).

For most packing materials values, we used per-unit values based on the data in the *Import Statistics*. For iron drums, however, we used a price quote from an Indian manufacturer rather than a value from the *Import Statistics* because the quoted price was for the appropriate type of container used, whereas the *Import Statistics* were aggregated over various types of containers. We made further adjustments to account for freight costs incurred between the PRC supplier and manganese metal producers.

To value electricity, we used the average rate applicable to large industrial users throughout India as reported in the *1995 Confederation of Indian Industries Handbook of Statistics*. We adjusted the March 1, 1995, value to reflect inflation up to the POR using the WPI published by the IMF.

To value rail freight, we relied upon rates quoted by a manganese mine in India. To value truck freight, we used a price quotation from an Indian freight provider. Because this quote was for a period subsequent to the POR, we deflated the value back to the POR using WPI published by the IMF.

Use of Facts Otherwise Available

Section 776(a)(2) of the Act provides that if an interested party (1) withholds information that has been requested by the Department, (2) fails to provide such information in a timely manner or in the form requested, (3) significantly impedes a proceeding under the antidumping statute, or (4) provides information that cannot be verified, the Department shall use, subject to section 782(d), facts available in reaching the applicable determination. While section 782(d) of the Act provides certain conditions that must be satisfied before the Department may disregard all or part of the information submitted by a respondent, these conditions only apply when the information submitted can be verified and the interested parties have acted to the best of their abilities. See section 782(e) of the Act.

1. Application of Facts Available

We preliminarily determine that, in accordance with sections 776(a)(2) and 776(b) of the Act, the use of facts otherwise available, adverse to the company, is appropriate for HIED because its sales data could not be verified and because it did not cooperate to the best of its ability in the course of this review. These reasons are detailed below.

On August 13, 1998, the Department provided HIED with Customs Service data showing the POR entries into the United States of manganese metal from the PRC indicating HIED as the shipper. In an accompanying letter we noted that these entries differed in material ways from HIED's reported U.S. sales and requested that HIED comment on this inconsistency. HIED replied that its reported sales were correct and could be reconciled with its books. HIED further noted that any inconsistencies were

likely due to ''fraudulent schemes'' on the part of other exporters to export subject merchandise into the United States under the most favorable circumstances.

The Department subsequently conducted a verification of HIED's reported sales. During the course of verification, we encountered numerous inconsistencies and delays, and certain documents were not available. For instance, HIED officials' explanation of the company's relationship to its U.S. customer was, in general, incongruous and incomplete and, at times, entirely contrary to what other company officials had stated previously. Moreover, although company officials claimed initially that only one of HIED's departments and one of its affiliates made sales of manganese metal during the POR, Department officials conducting the verification (the Verification Team) subsequently identified accounting records which indicated that at least one additional business unit may also have been involved in selling manganese metal. Furthermore, the Verification Team was unable to verify the total quantity and value of subject merchandise sold by HIED and its affiliates because certain intermediate accounting records could not be reconciled to source data or to the financial statements.

Verification of the completeness of HIED's sales reporting was also seriously hindered by the Verification Team's inability to review several of the sales and accounting records reportedly maintained by HIED. In some cases, the source documentation requested by the Department to verify total sales was reportedly discarded prior to verification. Company officials offered no explanation as to why they were unable to retrieve other sales and accounting records, maintained at the company headquarters, for the majority of HIED's sales departments. Sales and accounting records for HIED's affiliates, including those selling manganese metal, were likewise not available though, according to HIED officials, this was because officials were unwilling to travel to other locations in the PRC where the documents were kept.

There were many significant delays in the verification process as a result of sorting through conflicting statements by officials and of the difficulty in locating documents which were explicitly requested by the Department in the verification outline sent prior to the verification. Despite the fact that the verification was extended—at the Department's initiative— for an additional half day, several important documents were not presented to the Verification Team until near or at the end of verification, preventing an adequate review of important data.

Subsequent to verification, the Department received from the Customs Service supporting documentation (*e.g.*, Customs Form 7501, commercial invoices, packing lists) filed by the U.S. importer upon entering the subject merchandise into the United States for several of the entries which appeared in the U.S. Customs data. The supporting documentation for several entries listed in the U.S. Customs data identified HIED clearly as the actual exporter of the subject merchandise. However, for some of these entries there were no corresponding sales listed in HIED's U.S. sales listing.

These numerous inconsistencies and delays, and the unavailability of documentation, taken together, constitute a verification failure under section 776(a)(2)(D) of the Act. Moreover, based on information obtained from the Customs Service, we have determined that HIED failed to report sales it made to the United States. The Department has, therefore, determined that, because HIED's reported sales data could not be verified and, generally, the credibility of the information contained in HIED's questionnaire responses could not be established, section 776(a) of the Act requires the Department to disregard HIED's questionnaire responses and apply facts available.

2. Use of Adverse Facts Available

In selecting from among the facts available, section 776(b) of the Act authorizes the Department to use an adverse inference if the Department finds that a party has failed to cooperate by not acting to the best of its ability to comply with requests for information. *See Statement of Administrative Action* (SAA), H.R. Doc. 316, Vol. 1, 103rd Cong., 2d sess. 870 at 870 (1994). To examine whether the respondent ''cooperated'' by ''acting to the best of its ability'' under section 776(b) of the Act, the Department considers, *inter alia*, the accuracy and completeness of submitted information and whether the respondent has hindered the calculation of accurate dumping margins. *See, e.g., Certain Welded Carbon Steel Pipes and Tubes From Thailand: Final Results of Antidumping Duty Administrative Review*, 62 FR 53808, 53819–53820 (October 16, 1997).

As discussed above, HIED failed to provide much of the documentation, requested by the Verification Team, necessary to verify HIED's sales. Moreover, various company officials' statements were contradictory on several points central to a successful verification. Furthermore, the Department identified unreported sales of subject merchandise by HIED which the company knew, or should have known, should have been properly included in the reported U.S. sales list. Thus, we have determined that HIED withheld information we requested and significantly impeded the antidumping proceeding.

We have, therefore, determined that HIED has not acted to the best of its ability to comply with our requests for information. Accordingly, consistent with section 776(b) of the Act, we have applied adverse facts available to this company.

3. Corroboration of Secondary Information

In this review, we are using as adverse facts available the PRC-wide rate (143.32 percent) determined for non-responding exporters involved in the *LTFV Investigation*. This margin represents the highest margin in the petition, as modified by the Department for the purposes of initiation. *See Initiation of Antidumping Duty Investigation: Manganese Metal from the PRC*, 59 FR 61869 (December 2, 1994) (*LTFV Initiation*).

Information derived from the petition constitutes secondary information within the meaning of the SAA. *See* SAA at 870. Section 776(c) of the Act provides that the Department shall, to the extent practicable, corroborate secondary information from independent sources reasonably at its disposal. The SAA provides that ''corroborate'' means that the Department will satisfy itself that the secondary information to be used has probative value. The SAA at 870, however, states further that ''the fact that corroboration may not be practicable in a given circumstance will not prevent the agencies from applying an adverse inference.'' In addition, the SAA, at 869, emphasizes that the Department need not prove that the facts available are the best alternative information.

To corroborate secondary information, to the extent practicable the Department will examine the reliability and relevance of the information to be used. To examine the reliability of margins in the petition, we examine whether, based on available evidence, those margins reasonably reflect a level of dumping that may have occurred during the period of investigation by any firm, including those that did not provide us with usable information. This generally consists of examining, to the extent practicable, whether the significant

elements used to derive the petition margins, or the resulting margins, are supported by independent sources. With respect to the relevance aspect of corroboration, the Department will consider information reasonably at its disposal as to whether there are circumstances that would render a margin not relevant. Where circumstances indicate that the selected margin may not be relevant, the Department will attempt to find a more appropriate basis for facts available. *See, e.g., Fresh Cut Flowers from Mexico; Final Results of Antidumping Duty Administrative Review,* 61 FR 6812, 6814 (February 22, 1996) (where the Department disregarded the highest margin as best information available because the margin was based on another company's uncharacteristic business expense resulting in an unusually high margin).

For the initiation of the investigation, based on an analysis of the petition and a subsequent supplement to the petition, the Department modified the dumping margin contained in the petition. *See LTFV Initiation* at 61870. In the petition, the U.S. price was based on price quotations obtained for manganese from the PRC during December 1993 through May 1994. The factors of production were valued, where possible, using publicly available published information for India. Where Indian values were not available, the petitioners used data based on their own costs. For the initiation, however, the Department disallowed all factors valued by using the petitioners' own costs. Instead, we recalculated factory overhead and depreciation expenses using the statistics in the *Reserve Bank of India Bulletin* (December 1992), a publicly available and independent source used in other investigations of imports from the PRC. We also recalculated the valuation of several process chemicals using data from the independent source *Chemical Marketing Reporter.* Furthermore, we revalued electricity costs using World Bank data on electricity rates for industrial users in Indonesia, an appropriate surrogate country at a comparable level of economic development to the PRC.

We find, therefore, for the purpose of these preliminary results that the PRC-wide margin established in the *LTFV Investigation* is reliable. As there is no information on the record of this review that demonstrates that the rate selected is not an appropriate adverse facts available rate for HIED, we determine that this rate has probative value and, therefore, is an appropriate basis for facts otherwise available.

Preliminary Results of the Review

We hereby determine that the following weighted-average margins exist for the period February 1, 1997, through January 31, 1998:

Manufacturer/Exporter	Margin (percent)
CMIECHN/CNIECHN	6.08
HIED	143.32

Because we are rescinding the review with respect to CEIEC and Minmetals, the respective company-specific rates for these companies remain unchanged.

Any interested party may request a hearing within 30 days of publication of this notice. Any hearing, if requested, will be held approximately 37 days after the publication of this notice. Interested parties may submit written comments (case briefs) within 30 days of the date of publication of this notice. Rebuttal comments (rebuttal briefs), which must be limited to issues raised in the case briefs, may be filed not later than 35 days after the date of publication. The Department will issue a notice of final results of this administrative review, including the results of its analysis of issues raised in any such written comments, within 120 days of publication of these preliminary results.

Assessment and Cash Deposit Rates

The Department shall determine, and the Customs Service shall assess, antidumping duties on all appropriate entries. The Department will issue appraisement instructions directly to the Customs Service.

In order to assess duties on appropriate entries as a result of this review, we have calculated entry-specific duty assessment rates based on the ratio of the amount of duty calculated for each of CMIECHN/CNIECHN's verified sales during the POR to the total entered value of the corresponding entry. The Department will instruct the Customs Service to assess these rates only on those entries which correspond to sales verified by the Department as having been made directly by CMIECHN/CNIECHN.

As discussed in the *Export Price* section above, however, the Customs entry data for the POR indicates that many more shipments of manganese metal listing CMIECHN/CNIECHN as the manufacturer/exporter were entered into the United States than the number of POR sales reported by CMIECHN/CNIECHN. On those entries listing CMIECHN/CNIECHN as the manufacturer/exporter but for which there are no corresponding verified sales, the Department will instruct the Customs Service to assess the PRC-wide rate of 143.32 percent. The Department will likewise instruct the Customs Service to assess the facts available rate, also 143.32 percent, on all POR entries from HIED.

Furthermore, the following cash deposit requirements will be effective upon publication of the final results of this administrative review for all shipments of the subject merchandise entered, or withdrawn from warehouse, for consumption on or after the publication date, as provided for by section 751(a)(1) of the Act: (1) for HIED and CMIECHN/CNIECHN, the cash deposit rate will be the rates for these firms established in the final results of this review; (2) for Minmetals and CEIEC, which we determined to be entitled to a separate rate in the *LTFV Investigation* but which did not have shipments or entries to the United States during the POR, the rates will continue to be 5.88 percent and 11.77 percent, respectively (these are the rates which currently apply to these companies); and (3) for all other PRC exporters, the cash deposit rate will be 143.32 percent. These deposit requirements, when imposed, shall remain in effect until publication of the final results of the next administrative review.

This notice also serves as a preliminary reminder to importers of their responsibility under 19 CFR 351.402(f) to file a certificate regarding the reimbursement of antidumping duties prior to liquidation of the relevant entries during this review period. Failure to comply with this requirement could result in the Secretary's presumption that reimbursement of antidumping duties occurred and the subsequent assessment of double antidumping duties.

We are issuing and publishing this determination in accordance with sections 751(a)(1) and 777(i)(1) of the Act.

Dated: March 1, 1999.

Robert S. LaRussa,

Assistant Secretary for Import Administration.

[FR Doc. 99–5628 Filed 3–5–99; 8:45 am]

BILLING CODE 3510–DS–P

DEPARTMENT OF COMMERCE

International Trade Administration

[A–469–007, A–570–001]

Potassium Permanganate From Spain and From the People's Republic of China: Extension of Time Limit for Final Results of Five-Year Review

AGENCY: Import Administration, International Trade Administration, Department of Commerce.

ACTION: Notice of extension of time limit for final results of five-year (''sunset'') review.

SUMMARY: The Department of Commerce (''the Department'') is extending the time limit for the final results of the sunset reviews on the antidumping duty orders on potassium permanganate from Spain and from the People's Republic of China. Based on adequate response from domestic interested parties and inadequate response (in these cases no response) from respondent interested parties, the Department is conducting expedited sunset reviews to determine whether revocation of the orders would be likely to lead to continuation or recurrence of dumping. As a result of this extension, the Department intends to issue its final results not later than June 1, 1999.

EFFECTIVE DATE: March 8, 1999.

FOR FURTHER INFORMATION CONTACT: Scott E. Smith or Melissa G. Skinner, Import Administration, International Trade Administration, U.S. Department of Commerce, Pennsylvania Avenue and 14th Street, N.W., Washington, D.C. 20230; telephone: (202) 482–6397, or (202) 482–1560 respectively.

Extension of Final Results

The Department has determined that the sunset reviews of the antidumping duty orders on potassium permanganate from Spain and from the People's Republic of China are extraordinarily complicated. In accordance with section 751(c)(5)(C)(v) of the Tariff Act of 1930, as amended (''the Act''), the Department may treat a review as extraordinarily complicated if it is a review of a transition order (*i.e.*, an order in effect on January 1, 1995). *See* section 751(c)(6)(C) of the Act. The Department is extending the time limit for completion of the final results of these reviews until not later than June 1, 1999, in accordance with section 751(c)(5)(B) of the Act.

Dated: March 2, 1999.

Robert S. LaRussa,

Assistant Secretary for Import Administration.

[FR Doc. 99–5637 Filed 3–5–99; 8:45 am]

BILLING CODE 3510–DS–P

DEPARTMENT OF COMMERCE

International Trade Administration

Application for Duty-Free Entry of Scientific Instrument

Pursuant to Section 6(c) of the Educational, Scientific and Cultural Materials Importation Act of 1966 (Pub. L. 89–651; 80 Stat. 897; 15 CFR part 301), we invite comments on the question of whether an instrument of equivalent scientific value, for the purposes for which the instrument shown below is intended to be used, is being manufactured in the United States.

Comments must comply with 15 CFR 301.5(a)(3) and (4) of the regulations and be filed within 20 days with the Statutory Import Programs Staff, U.S. Department of Commerce, Washington, D.C. 20230. Application may be examined between 8:30 A.M. and 5:00 P.M. in Room 4211, U.S. Department of Commerce, 14th Street and Constitution Avenue, N.W., Washington, D.C.

Docket Number: 99–002. *Applicant:* North Carolina State University, Purchasing Department, Campus Box 7212, Raleigh, NC 27695. *Instrument:* Lifetime Measurement System, Model JANUS 200–M. *Manufacturer:* Amecon Messtechnik, Germany. *Intended Use:* The instrument will be used for studies of silicon wafer materials used in the production of giga-scale integrated circuit manufacturing. Experiments will consist of minority carrier lifetime study of defects and impurities which can be mapped across a 12 inch diameter wafer. The objective of the study is to improve silicon wafer IC manufacturing processes by providing data and fundamental understanding of the interaction between chemical, structural and electrical behavior of silicon. The instrument will also be used in the courses MAT 791, Characterization of Semiconductor Materials and MAT 460, Introduction to Science and Technology of Electronic Materials to prepare students for an industry like environment. Application accepted by Commissioner of Customs: February 18, 1999.

Frank W. Creel,

Director, Statutory Import Programs Staff.

[FR Doc. 99–5631 Filed 3–5–99; 8:45 am]

BILLING CODE 3510–DS–P

DEPARTMENT OF COMMERCE

International Trade Administration

United States-Turkey Business Development Council; Membership Opportunity

AGENCY: International Trade Administration, Commerce.

ACTION: Notice.

SUMMARY: The Department of Commerce established a Business Development Council (BDC) in cooperation with the Turkish Government in 1996. The BDC has established eleven working groups: energy/environment, telecommunications, textiles, health, education, defense, finance, agriculture, tourism, transportation, and media. The Department of Commerce is currently seeking nominations of outstanding individuals to fill vacancies on the U.S. section of the BDC, including a CEO to fill the position of U.S. private sector Vice-Chair. The purpose of the BDC is to provide a forum through which U.S. and Turkish private sector representatives can engage in constructive exchanges of information on commercial matters, and in which governments can exchange information, solve problems, and work more effectively on issues of mutual concern.

DATES: In order to receive full consideration for BDC membership, requests must be received no later than Friday, April 2, 1999.

ADDRESSES: Please send your requests for consideration to Mr. David De Falco, International Trade Specialist, Office of European Union and Regional Affairs, by fax on 202/482–2897 or by mail at Room 3043, U.S. Department of Commerce, 14th St. & Constitution Ave., N.W., Washington, D.C. 20230.

FOR FURTHER INFORMATION CONTACT: Mr. David De Falco of the Office of European Union and Regional Affairs, Room 3043, U.S. Department of Commerce, 14th St. & Constitution Ave., N.W., Washington, D.C. 20230; telephone: 202/482–2178.

SUPPLEMENTARY INFORMATION: The Council is composed of two sections, the U.S. section and the Turkish section. The U.S. section is chaired by the Under Secretary for International Trade of the Department of Commerce and includes 23 members from the U.S. private sector.

Private sector participants of the BDC will address issues relating to the following:

—Identifying commercial opportunities, impediments and issues of concern to the U.S. and Turkish business communities;

—Addressing obstacles to trade and investment between the United States and Turkey;
—Improving the dissemination of information on U.S.-Turkey market opportunities;
—Implementing trade/business development and promotion programs, including trade missions, exhibits, seminars, and other events; and
—Identifying further steps to facilitate and encourage the development of commercial expansion and cooperation between the two countries.

The inaugural meeting of the BDC was held in Ankara, Turkey in January 1998 with government and private sector members from both countries in attendance. Follow-up sessions were held in May 1998 in Istanbul, Turkey and November 1998 in Washington, D.C.

Obligations: Private sector members are appointed for two-year terms and serve at the discretion of the Secretary of Commerce. Members serve in a representative capacity presenting the views and interests of the business sector in which they operate. They are not special government employees. Members are expected to participate fully in defining the agenda for the BDC and in implementing its work program. Members are responsible for travel, living and personal expenses associated with their participation, and may be responsible for a pro rata share of administrative and communications costs of the Council.

Criteria: In order to be eligible for membership in the U.S. section, potential candidates must be:

—U.S. citizens or permanent U.S. residents;
—CEOs or other senior management level employees of U.S. companies or organizations involved in trade with and/or investment in Turkey; and
—Not a registered foreign agent under the Foreign Agent Registration Act of 1938, as amended (FARA).

In reviewing eligible candidates, the Department of Commerce will consider such selection factors as:

—Depth of experience in the Turkish market;
—Export/investment experience;
—Industry or service sector represented;
—Company size or, if an organization, size and number of member companies;
—Contribution to diversity based on company size, location, demographics, and traditional under representation in business; and
—Stated commitment to actively participate in BDC activities and meetings.

The Department of Commerce is currently seeking nominations of outstanding individuals to fill vacancies on the U.S. section of the BDC. Of the new CEO members of the U.S. side selected pursuant to this notice, we intend to select a U.S. private sector Vice-Chair to coordinate the activities of the U.S. private sector. This individual will work directly with the Department of Commerce and with his Turkish private sector counterpart to organize private sector participation and follow-up of private sector recommendations. The U.S. Vice-Chair must be a Chief Executive Officer in addition to fulfilling the general membership criteria described above.

To be considered for membership, please provide the following: name and title of individual proposed for consideration; name and address of organization or company sponsoring each individual; company or organization's product or service line; size of the company or, if an organization, the size and number of member companies; export/foreign investment experience; a brief statement (not more than two pages) of why each candidate should be considered for membership on the Council; the particular segment of business community each candidate would represent; and a personal resume.

Authority: 15 U.S.C. 1512; Reorganization Plan No. 3 of 1979, 19 U.S.C. 2171 note.

Dated: March 2, 1999.

Patrick A. Mulloy,

Assistant Secretary, Market Access and Compliance, International Trade Administration.

[FR Doc. 99–5567 Filed 3–5–99; 8:45 am]

BILLING CODE 3510–DA–P

DEPARTMENT OF COMMERCE

International Trade Administration

[C–351–504]

Heavy Iron Construction Castings From Brazil: Extension of Time Limit for Final Results of Five-Year Review

AGENCY: Import Administration, International Trade Administration, Department of Commerce.

ACTION: Notice of extension of time limit for final results of five-year (''Sunset'') review

SUMMARY: The Department of Commerce (''the Department'') is extending the time limit for the final results of the sunset review on the countervailing duty order on heavy iron construction castings from Brazil. Based on adequate response from domestic interested parties and inadequate response (in this case no response) from respondent interested parties, the Department is conducting an expedited sunset review to determine whether revocation of the order would be likely to lead to continuation or recurrence of a countervailable subsidy. As a result of this extension, the Department intends to issue its final results not later than June 1, 1999.

EFFECTIVE DATE: March 8, 1999.

FOR FURTHER INFORMATION CONTACT: Jason M. Appelbaum or Melissa G. Skinner, Import Administration, International Trade Administration, U.S. Department of Commerce, Pennsylvania Avenue and 14th Street, N.W., Washington, D.C. 20230; telephone: (202) 482–5050, or (202) 482–1560 respectively.

Extension of Final Results

The Department has determined that the sunset review of the countervailing duty order on heavy iron construction castings from Brazil is extraordinarily complicated. In accordance with section 751(c)(5)(C)(v) of the Tariff Act of 1930, as amended (''the Act''), the Department may treat a review as extraordinarily complicated if it is a review of a transition order (i.e., an order in effect on January 1, 1995). *See* section 751(c)(6)(C) of the Act. The Department is extending the time limit for completion of the final results of this review until not later than June 1, 1999, in accordance with section 751(c)(5)(B) of the Act.

Dated: March 2, 1999.

Robert S. LaRussa,

Assistant Secretary for Import Administration.

[FR Doc. 99–5633 Filed 3–5–99; 8:45 am]

BILLING CODE 3510–DS–P

DEPARTMENT OF COMMERCE

International Trade Administration

[C–533–063]

Iron-Metal Castings From India: Extension of Time Limit for Final Results of Five-Year Review

AGENCY: Import Administration, International Trade Administration, Department of Commerce

ACTION: Notice of extension of time limit for final results of five-year (''sunset'') review

SUMMARY: The Department of Commerce (''the Department'') is extending the time limit for the final results of the sunset review on the countervailing duty order on iron-metal castings from India. Based on adequate response from domestic interested parties and inadequate response (in this case no response) from respondent interested parties, the Department is conducting an expedited sunset review to determine whether revocation of the order would be likely to lead to continuation or recurrence of a countervailable subsidy. As a result of this extension, the Department intends to issue its final results not later than June 1, 1999.

EFFECTIVE DATE: March 8, 1999.

FOR FURTHER INFORMATION CONTACT: Jason M. Appelbaum or Melissa G. Skinner, Import Administration, International Trade Administration, U.S. Department of Commerce, Pennsylvania Avenue and 14th Street, N.W., Washington, D.C. 20230; telephone: (202) 482–5050, or (202) 482–1560 respectively.

Extension of Final Results

The Department has determined that the sunset review of the countervailing duty order on iron-metal castings from India is extraordinarily complicated. In accordance with section 751(c)(5)(C)(v) of the Tariff Act of 1930, as amended (''the Act''), the Department may treat a review as extraordinarily complicated if it is a review of a transition order (i.e., an order in effect on January 1, 1995). *See* section 751(c)(6)(C) of the Act. The Department is extending the time limit for completion of the final results of this review until not later than June 1, 1999, in accordance with section 751(c)(5)(B) of the Act.

Dated: March 2, 1999.

Robert S. LaRussa,

Assistant Secretary for Import Administration.

[FR Doc. 99–5632 Filed 3–5–99; 8:45 am]

BILLING CODE 3510–DS–P

DEPARTMENT OF COMMERCE

International Trade Administration

December 1998 Sunset Review: Final Results and Revocation

AGENCY: Import Administration, International Trade Administration, Department of Commerce.

ACTION: Notice of final results of sunset review and revocation of countervailing duty order: tillage tools from Argentina (C–351–406).

SUMMARY: On December 2, 1998, the Department of Commerce (''the Department'') initiated a sunset review of the countervailing duty order on tillage tools from Brazil. Because no domestic interested party responded to the sunset review notice of initiation by the applicable deadline, the Department is revoking this order.

EFFECTIVE DATE: January 1, 2000.

FOR FURTHER INFORMATION CONTACT: Martha V. Douthit, Scott E. Smith, or Melissa G. Skinner, Import Administration, International Trade Administration, U.S. Department of Commerce, Pennsylvania Avenue and 14th Street, N.W., Washington, D.C. 20230; telephone: (202) 482–3207, (202) 482–6397, or (202) 482–1560 respectively.

SUPPLEMENTARY INFORMATION:

Background

The Department issued a countervailing duty order on certain round-shaped agricultural tillage tools from Brazil (50 FR 42743, October 22, 1985). Pursuant to section 751(c) of the Tariff Act of 1930, as amended (''the Act''), the Department initiated a sunset review of this order by publishing notice of the initiation in the **Federal Register** (63 FR 66527, December 2, 1998). In addition, as a courtesy to interested parties, the Department sent letters, via certified and registered mail, to each party listed on the Department's most current service list for this proceeding to inform them of the automatic initiation of a sunset review on this order.

In the sunset review of the countervailing duty order on tillage tools from Brazil, we received notices of intent to participate from Empire Plow Company (''Empire'') and from Osmundsom Manufacturing Company (''Osmundsom'') by the December 17, 1998, deadline (*see* section 351.218(d)(1)(i) of *Procedures for Conducting Five-year (''Sunset'') Reviews of Antidumping and Countervailing Duty Orders,* 63 FR 13520 (March 20, 1998) (''*Sunset Regulations*''). Empire withdrew its notice of intent to participate on December 18, 1998. On December 24, 1998, we received notice from Osmundson, withdrawing from the review process. As a result, the Department determined that no domestic interested party intends to participate in the sunset review and, on December 30, 1998, we notified the International Trade Commission that we intended to issue a final determination revoking this countervailing duty order.

Determination To Revoke

Pursuant to section 751(c)(3)(A) of the Act and section 351.218(d)(1)(iii)(B)(3) of the *Sunset Regulations,* if no interested party responds to the notice of initiation, the Department shall issue a final determination, within 90 days after the initiation of the review, revoking the finding or order or terminating the suspended investigation. Because Empire and Osmundson withdrew the notices of intent to participate and withdrew from the review process and no other domestic party filed a substantive response (*see* sections 351.218(d)(1)(i) and 351.218(d)(3) of the *Sunset Regulations*), we are revoking this countervailing duty order.

Effective Date of Revocation and Termination

Pursuant to section 751(c)(6)(A)(iv) of the Act, the Department will instruct the United States Customs Service to terminate the suspension of liquidation of the merchandise subject to these orders entered, or withdrawn from warehouse, on or after January 1, 2000. Entries of subject merchandise prior to the effective date of revocation will continue to be subject to suspension of liquidation and duty deposit requirements. The Department will complete any pending administrative reviews of this order and will conduct administrative reviews of all subject merchandise entered prior to the effective date of revocation in response to appropriately filed requests for review.

Dated: March 2, 1999.

Robert S. LaRussa,

Assistant Secretary for Import Administration.

[FR Doc. 99–5639 Filed 3–5–99; 8:45 am]

BILLING CODE 3510–DS–P

DEPARTMENT OF COMMERCE

International Trade Administration, Commerce.

Export Trade Certificate of Review

ACTION: Notice of Issuance of an Amended Export Trade Certificate of Review, Application No. 87–5A001.

SUMMARY: The Department of Commerce has issued an amendment to the Export Trade Certificate of Review granted to American Film Marketing Association (''AFMA'') on April 10, 1987. Notice of issuance of the Certificate was published in the **Federal Register** on April 17, 1987 (52 FR 12578).

FOR FURTHER INFORMATION CONTACT: Morton Schnabel, Director, Office of Export Trading Company Affairs, International Trade Administration, (202) 482–5131. This is not a toll-free number.

SUPPLEMENTARY INFORMATION: Title III of the Export Trading. Company Act of 1982 (15 U.S.C. Sections 4001–21) authorizes the Secretary of Commerce to issue Export Trade Certificates of Review. The regulations implementing Title III are found at 15 CFR Part 325 (1998).

The Office of Export Trading Company Affairs (''OETCA'') is issuing this notice pursuant to 15 CFR 325.6(b), which requires the Department of Commerce to publish a summary of a Certificate in the **Federal Register**. Under Section 305(a) of the Act and 15 CFR 325.11(a), any person aggrieved by the Secretary's determination may, within 30 days of the date of this notice, bring an action in any appropriate district court of the United States to set aside the determination on the ground that the determination is erroneous.

Description of Amended Certificate

Export Trade Certificate of Review No. 87–00001, was issued to American Film Marketing Association on April 10, 1987 (52 FR 12578, April 17, 1987) and previously amended on March 25, 1988 (53 FR 10267, March 30, 1988); August 29, 1989 (54 FR 36848, September 5, 1989); November 5, 1991 (56 FR 57515, November 12, 1991); and August 26, 1993 (58 FR 46161, September 1, 1993).

AFMA's Export Trade Certificate of Review has been amended to: 1. Add the following companies as new ''Members'' of the Certificate within the meaning of section 325.2(1) of the Regulations (15 C.F.R. 325.2(1)): Alain Siritzky Productions (ASP), Los Angeles, CA; Alfred Haber Distribution, Inc., Palisades Park, NJ; Alliance Communications Corporation, Beverly Hills, CA; Arama Entertainment, Inc., Encino, CA; Arrow Films International Inc., New York, NY; Artisan Entertainment, Santa Monica, CA; Associated Television International, Hollywood, CA; Bank of America NT & SA, Los Angeles, CA; Banque Paribas, Los Angeles, CA; Blue Rider Pictures, Santa Monica, CA; Bonneville Worldwide Entertainment, Encino, CA; Capella International, Inc., Beverly Hills, CA; Cecchi Gori Group, Los Angeles, CA; Chase Manhattan Bank, Los Angeles, CA; Cinema Arts Entertainment, Beverly Hills, CA; Cinema Completions International, Inc., Universal City, CA; Cinema Financial Services, Inc., New York, NY; Cinequanon Pictures International, Los Angeles, CA; City National Bank, Beverly Hills, CA; CLT-IFA, Beverly Hills, CA; Comerica Bank-California, Los Angeles, CA; Coutts & Co./Natwest Group, Beverly Hills, CA; Crystal Sky Communications, Los Angeles, CA; Discovery Communications, Inc., Bethesda, MD; Distant Horizon Ltd., Los Angeles, CA; Dream Entertainment, Los Angeles, CA; Film Finances, Inc., Los Angeles, CA; Film Roman, Inc., N. Hollywood, CA; Films (Guernsey) Limited, Los Angeles, CA; Franchise Pictures, Los Angeles, CA; Goldcrest Films International Ltd., Los Angeles, CA; Good Machine International, Inc., New York, NY; Green Communications, Burbank, CA; Hamdon Entertainment, Studio City, VA; Harmony Gold USA Inc., Los Angeles, CA; HBO Enterprises, New York, NY; IFM Film Associates, Inc., Los Angeles, CA; Imperial Entertainment Group, Beverly Hills, CA; Initial Entertainment, Los Angeles, CA; Interlight Pictures, W. Hollywood, CA; Intermedia, Beverly Hills, CA; International Keystone Entertainment, Inc., Malibu, CA; Kathy Morgan International (KMI), Los Angeles, CA; King World Productions, Inc., New York, NY; Kushner-Locke Company, The, Los Angeles, CA; Lakeshore International, Hollywood, CA; Lewis Horwitz Organization, Los Angeles, CA; Lions Gate Films International, Los Angeles, CA; Lumiere International, Los Angeles, CA; Marquee Entertainment Inc., Los Angeles, CA; MTG Media Properties, Ltd., New York, NY; Natexis Bank—BFCE, Los Angeles, CA; NBC Enterprises, Burbank, CA; Nu Image, Los Angeles, CA; Oasis Pictures, Los Angeles, CA; October Films International, New York, NY; P.M. Entertainment, Sunland, CA; Pacific Century Bank, Encino, CA; Pandora Cinema, Santa Monica, CA; Pearson Television International, Los Angeles, CA; Phoenician Entertainment, Sherman Oaks, CA; Playboy Entertainment Group, Inc., Beverly Hills, CA; Quadra Entertainment, Beverly Hills, CA; Redwood Communications, Venice, CA; Regent Entertainment, Los Angeles, CA; Republic Bank California N.A., Beverly Hills, CA; RKO Pictures, Los Angeles, CA; Rysher Entertainment, Santa Monica, CA; Seven Arts Entertainment, Hollywood, CA; Shooting Gallery, The, Beverly Hills, CA; Showcase Entertainment, Inc., Woodland Hills, CA; Silicon Valley Bank for the activities of its Entertainment Division, Los Angeles, CA; Tomorrow Film Corp., Santa Monica, CA; Trident Releasing, Inc., Los Angeles, CA; United Film Distributors, Inc., Los Angeles, CA; and Village Roadshow Pictures Int'l., Burbank, CA;

2. Delete as ''Members'' of the Certificate: Alice Entertainment, Inc./Kidpix Entertainment, Inc.; Angelika Films, Inc.; Arista Films, Inc.; Carolco Service, Inc.; Cinetrust Entertainment Corp.; Dino De Laurentiis Communications; Double Helix Films; Film World Entertainments/Miracle Films; Fries Distribution Co.; Grand Am Ltd.; Hemdale Communications, Inc.; Inter-Ocean Film Sales, Ltd.; I.R.S. Media International; ITC Entertainment Group; Kings Road Entertainment, Inc.; Lone Star Pictures International, Inc.; Manley Productions, Inc.; The Movie Group, Inc.; New World International; Odyssey Distributors, Ltd.; Penta International, Ltd.; Reel Movies International, Inc.; The Samuel Goldwyn Company; Trans Atlantic Entertainment/I.R.S.; Turner Pictures Worldwide; West Side Studios; and 21st Century Film Corporation; and

3. Change the listing of the company name for the current ''Members'' cited in this paragraph to the new listing cited in parenthesis as follows: Image Organization, Inc. (Behaviour Worldwide, Inc.); Big Bear Licensing Corporation (Big Bear Licensing Corporation, Inc.); ABC Distribution Company (Buena Vista Film Sales); Cinevest Entertainment (Castle Hill Productions, Inc.); Paul International, Inc. (Crystal Sky Communications); Curb Organization (Curb Entertainment International Corp.); Gel Distribution (G.E.L. Productions); Full Moon Entertainment (Full Moon Pictures); Golden Harvest/Golden Communications (Golden Harvest Entertainment Co., Ltd.); American First Run Studios/Zantar (Keller Entertainment Group); I.N.I. Entertainment Group, Inc. (Liberty International Entertainment, Inc.); Lway Productions (Marquee Entertainment, Inc.); Noble Productions, Inc./Noble Film (Noble Productions, Inc.); Overseas Filmgroup Inc. (Overseas Film Group/First Look Pictures); Republic Pictures International (Republic Entertainment, Inc.); Imperial Entertainment B.V. (Scanbox International, Inc.); Starway International Corporation (Starway International); The Summit Group (Summit Entertainment); and Troma, Inc. (Troma Entertainment, Inc.). A copy of the amended certificate will be kept in the International Trade Administration's Freedom of Information Records Inspection Facility, Room 4102, U.S. Department of Commerce, 14th Street and Constitution Avenue, NW., Washington, DC 20230.

Dated: March 2, 1999.

Effective Date: December 9, 1998.

Morton Schnabel,

Director, Office of Export Trading Company Affairs.

[FR Doc. 99–5580 Filed 3–5–99; 8:45 am]

BILLING CODE 3510–DR–P

DEPARTMENT OF COMMERCE

International Trade Administration

Participation in Overseas Trade Mission

AGENCY: International Trade Administration, Department of Commerce.

ACTION: Notice.

SUMMARY: The Department of Commerce invites U.S. companies to participate in the following overseas trade mission: Ambassador David Aaron's Oil, Gas, and Petrochemicals Mission the Middle East; Location: Saudi Arabia, United Arab Emirates, Kuwait; Date: April 17–21, 1999.

Under Secretary for International Trade, Ambassador David Aaron, will lead an oil, gas, and petrochemicals trade mission to Dhahran, Saudi Arabia; Abu Dhabi, United Arab Emirates; and Kuwait City, Kuwait. The mission will include representatives from U.S. energy companies and energy equipment and service providers interested in entering the Arabian Gulf energy market or in expanding their presence in the region.

Time frame for applications: Applications may be submitted immediately to Joseph Ayoub, Energy Division—Basic Industries, U.S. Department of Commerce, Room H4056, Washington, 20230. Telephone: (202) 482–0313. Facsimile: (202) 482–0170 or 5361. Internet:

Joseph__Ayoub@ita.doc.gov

All applications must be received by March 17, 1999. Applications received after that date will be considered on a space available basis.

FOR FURTHER INFORMATION CONTACT: Joseph Ayoub, Department of Commerce Tel: 202–482–0681 Fax: 202–482–0304.

Dated: March 2, 1999.

Tom Nisbet,

Director, Promotion Planning and Support Division Office of Export Promotion Coordination.

[FR Doc. 99–5579 Filed 3–5–99; 8:45 am]

BILLING CODE 3510–DR–P

DEPARTMENT OF COMMERCE

National Oceanic and Atmospheric Administration

[I.D. 030299C]

Large Pelagics Fishing Survey

ACTION: Proposed collection; comment request

SUMMARY: The Department of Commerce, as part of its continuing effort to reduce paperwork and respondent burden, invites the general public and other Federal agencies to take this opportunity to comment on proposed and/or continuing information collections, as required by the Paperwork Reduction Act of 1995, Public Law 104–13 (44 U.S.C. 3506(c)(2)(A)).

DATES: Written comments must be submitted on or before May 7, 1999.

ADDRESSES: Direct all written comments to Linda Engelmeier, Departmental Forms Clearance Officer, Department of Commerce, Room 5327, 14th and Constitution Avenue, NW, Washington DC 20230.

FOR FURTHER INFORMATION CONTACT: Requests for additional information or copies of the information collection instrument(s) and instructions should be directed to Christopher Rogers, Highly Migratory Species Management Division (F/SF1), Office of Sustainable Fisheries, NMFS, 1315 East-West Highway, Silver Spring, MD 20910; (301) 713–2347.

SUPPLEMENTARY INFORMATION:

I. Abstract

For randomly selected vessels permitted in the Atlantic tunas, billfish, swordfish or shark fisheries, the vessel's owner would be required to respond to telephone and dockside surveys regarding fishing effort directed at, and catch of, Atlantic highly migratory species (HMS). Whether permitted or not, the vessel's owner would be required to make catch of HMS available for inspection and collection of scientific information during dockside intercepts. Other components of the telephone or dockside surveys would be voluntary (e.g., questions addressing social and economic issues). International treaty obligations pertaining to catch monitoring and provision of scientific information for stock assessments for these fisheries require a comprehensive reporting program.

II. Method of Collection

The information sought will be collected through computer-assisted telephone interviews, in-person interviews, and/or mail surveys. For the telephone surveys, respondents will be selected at random from permit lists. For dockside surveys, respondents will be selected at random upon return to the docks after fishing trips. Mail-back surveys will distributed at random during dockside intercepts or by random selection from permit lists.

III. Data

OMB Number: None

Form Number: None

Type of Review: Regular submission

Affected Public: Individuals, businesses or other for-profit.

Estimated Number of Respondents: 20,000

Estimated Time Per Response: Average response times are estimated at 8 minutes per telephone interview, 5 minutes per dockside intercept with a follow-up telephone call (1.5 minutes each) for validating 10 percent of dockside intercepts, 3 minutes per occurrence for the socio-economic questionnaire as a telephone or dockside add-on, 5 minutes each for independent socio-economic interview of charter/headboat clients, 1 minute per intercept for supplemental biological sampling, and 8 minutes per telephone or on-board interview of selected headboat captains.

Estimated Total Annual Burden Hours: 4,085

Estimated Total Annual Cost to Public: $0 (no capital expenditures)

IV. Request for Comments

Comments are invited on: (a) Whether the proposed collection of information is necessary for the proper performance of the functions of the agency, including whether the information shall have practical utility; (b) the accuracy of the agency's estimate of the burden (including hours and cost) of the proposed collection of information; (c) ways to enhance the quality, utility, and clarity of the information to be collected; and (d) ways to minimize the burden of the collection of information on respondents, including through the use of automated collection techniques or other forms of information technology.

Comments submitted in response to this notice will be summarized and/or included in the request for OMB approval of this information collection; they also will become a matter of public record.

Dated: March 1, 1999.

Linda Engelmeier,

Departmental Forms Clearance Officer, Office of the Chief Information Officer.

[FR Doc. 99–5676 Filed 3–5–99; 8:45 am]

BILLING CODE 3510–22–F

DEPARTMENT OF DEFENSE

Office of the Secretary

Defense Intelligence Agency, Science and Technology Advisory Board Closed Panel Meeting

AGENCY: Defense Intelligence Agency, Department of Defense.

ACTION: Notice.

SUMMARY: Pursuant to the provisions of Subsection (d) of Section 10 of Pub. L. 92–463, as amended by Section 5 of Pub. L. 94–409, notice is hereby given that a closed meeting of the DIA Science and Technology Advisory Board has been scheduled as follows.

DATES: 17 March 1999 (800am to 1600pm).

ADDRESSES: The Defense Intelligence Agency, 3100 Clarendon Blvd, Arlington, VA 22201–5300.

FOR FURTHER INFORMATION CONTACT: Maj Donald R. Culp, Jr., USAF, Executive Secretary, DIA Science and Technology Advisory Board, Washington, DC 20340–1328 (202) 231–4930.

SUPPLEMENTARY INFORMATION: The entire meeting is devoted to the discussion of classified information as defined in Section 552b(c)(l), Title 5 of the U.S. Code, and therefore will be closed to the public. The Board will receive briefings on and discuss several current critical intelligence issues and advise the Director, DIA, on related scientific and technical matters.

Dated: March 1, 1999.

L.M. Bynum,

Alternate OSD Federal Register Liaison Officer, Department of Defense.

[FR Doc. 99–5526 Filed 3–5–99; 8:45 am]

BILLING CODE 5000–04–M

DEPARTMENT OF DEFENSE

Office of the Secretary

Spring 1999 Conference Meeting of the Defense Advisory Committee on Women in the Services (DACOWITS)

AGENCY: Advisory Committee on Women in the Services, Department of Defense.

ACTION: Notice.

SUMMARY: Pursuant to Section 10(a), Pub. L. 92–463, as amended, notice is hereby given of a forthcoming semi-annual conference of the Defense Advisory Committee on Women in the Services (DACOWITS). The purpose of the Spring 1999 DACOWITS Conference is to assist the Secretary of Defense on matters relating to women in the Services. Conference sessions will be held daily and will be open to the public, unless otherwise noted below.

DATES: April 26–May 2, 1999.

ADDRESSES: Washington Dulles Airport Hotel, 13869 Park Center Road, Herndon, VA 20171; telephone: (703) 478–2900.

FOR FURTHER INFORMATION CONTACT: Major Susan E. Kolb, ARNG, or GySgt Brenda L. Warren, USMC, DACOWITS and Military Women Matters, OASD (Force Management Policy), 4000 Defense Pentagon, Room 3D769, Washington, DC 20301–4000; telephone (703) 697–2122 or E-Mail: *warrenb@pr.osd.mil.*

SUPPLEMENTARY INFORMATION: The following rules will govern the participation by members of the public at the conference:

(1) Members of the public will not be permitted to attend the OSD Luncheon, OSD Reception and Dinner and Conference Field Trip.

(2) The Opening Session, General Session, all Subcommittee Sessions, Tri-Committee Review, Final Review and the Voting Session will be open to the public.

(3) Interested persons may submit a written statement for consideration by the Committee and/or make an oral presentation of such during the conference.

(4) Persons desiring to make an oral presentation or submit a written statement to the Committee must notify the point of contact listed above no later than April 9, 1999.

(5) Length and number of oral presentations to be made will depend on the number of requests received from members of the public.

(6) Oral presentations by members of the public will be permitted only on Sunday, May 2, 1999, before the full Committee.

(7) Each person desiring to make an oral presentation must provide the DACOWITS office with one (1) copy of the presentation by April 9, 1999 and bring 175 copies of any material that is intended for distribution at the conference.

(8) Persons submitting a written statement for inclusion in the minutes of the conference must submit to the DACOWITS staff one (1) copy of the statement by the close of the conference on Sunday, May 2, 1999.

(9) Other new items from members of the public may be presented in writing to any DACOWITS member for transmittal to the DACOWITS Chair or Military Director, DACOWITS and Military Women Matters, for consideration.

(10) Members of the public will not be permitted to enter oral discussions conducted by the Committee members at any of the sessions; however, they will be permitted to reply to questions directed to them by the members of the Committee.

(11) After the official participants have asked questions and/or made comments to the scheduled speakers, members of the public will be permitted to ask questions if recognized by the Chair and if time allows.

(12) Non-social agenda events that are not open to the public are for administrative matters unrelated to substantive advice provided to the Department of Defense and do not involve DACOWITS deliberations or decision-making issues before the Committee. Conference sessions will be conducted according to the following agenda:

Wednesday, April 28, 1999

Conference Registration
Military Representatives Meeting (Senior Military Representatives Only)
Executive Committee Rules and Procedures Meeting (DACOWITS Members Only)

Thursday, April 29, 1999

Opening Session and General Session (Open to Public)
OSD Luncheon (Invited Guests Only)
Subcommittee Session (Open to Public)

Friday, April 30, 1999

Subcommittee Session (Open to Public)
Luncheon (Paid Registered Conference Participants Only)
Subcommittee Session (Open to Public)
Executive Committee Rules and Procedures Meeting (DACOWITS Members Only)
OSD Reception and Dinner (Invited Guests Only)

Saturday, May 1, 1999

Subcommittee Sessions (Open to Public)
Tri-Committee Review (Open to Public)
Subcommittee Session (Open to Public)
Field Trip (DACOWITS Members and Senior Military Representatives Only)
Executive Committee Rules and Procedures Meeting (DACOWITS Members Only)

Sunday, May 2, 1999

Final Review (Open to Public)
Voting Session (Open to Public)

Dated: March 25, 1999.

L.M. Bynum,

Alternate OSD Federal Register Liaison Officer, Department of Defense.

[FR Doc. 99–5525 Filed 3–5–99; 8:45 am]

BILLING CODE 5000–04–M

DEPARTMENT OF DEFENSE

Department of the Navy

Notice of Intent To Prepare an Environmental Impact Statement for the Disposal of Naval Weapons Industrial Reserve Plant (NWIRP) Bethpage, NY

AGENCY: Department of the Navy, DOD.

ACTION: Notice.

SUMMARY: Pursuant to Section 102(2)(c) of the National Environmental Policy Act of 1969, as implemented by the Council on Environmental Quality regulations (40 CFR Parts 1500–1508), the Department of the Navy, in association with the County of Nassau, New York, announces its intent to prepare an Environmental Impact Statement (EIS) to evaluate the environmental effects of disposal and subsequent reuse of the Naval Weapons Industrial Reserve Plant (NWIRP) Bethpage, New York.

The Navy will be the lead agency for the NEPA documentation. The County of Nassau intends to serve as the lead agency for the purposes of compliance with the New York State Environmental Quality Review Act (SEQRA). The EIS is being prepared to satisfy NEPA and also to be sufficient to permit the County and other involved agencies to rely upon the EIS for purposes of complying with SEQRA. No separate EIS is being prepared under SEQRA.

The NWIRP Bethpage property consists of two non-contiguous land parcels encompassing 109.5 acres and several individual buildings within the former 605-acre Northrop Grumman Corporation campus in the hamlet of Bethpage, Town of Oyster Bay, Nassau County, New York. Currently, the Plant is developed with manufacturing, light industrial, and administrative land uses.

The EIS will address the potential disposal of NWIRP Bethpage to Nassau County and the potential impacts of subsequent reuse. All available property will be disposed of in accordance with the provisions of applicable laws, including Public Law 105–85, Section 2852, which enables the Navy to dispose of the property, without consideration, to the County of Nassau.

In addition to disposal options, the EIS will evaluate three reuse alternatives developed by Nassau County. The reuse alternatives vary in the types and amount of construction as well as the proposed land uses. Light industrial, commercial, and administrative uses are included in the potential reuse scenarios. Issues to be addressed in the EIS include, but are not limited to, land use and zoning, socioeconomics, community facilities and services, transportation, air quality, noise, infrastructure, cultural resources, natural resources, and petroleum and hazardous materials.

A public scoping meeting to receive oral and written comments will be held on March 23, 1999 at Bethpage High School located at the corner of Cherry and Stewart Avenues, Bethpage, New York. The meeting will begin at 7 p.m. A brief presentation will precede the request for public comment. Navy and Nassau County representatives will be available at this meeting to receive comments from the public regarding issues of concern. It is important that federal, state, and local agencies, and interested individuals take this opportunity to identify environmental concerns that should be addressed during the preparation of the EIS. In the interest of available time, each speaker will be asked to limit oral comments to five minutes.

Agencies and the public are also invited and encouraged to provide written comments in addition to, or in lieu of, oral comments at the public meeting. To be most helpful, comments should clearly describe specific issues or topics, which the commentor believes the EIS, should address.

ADDRESSES: Written statements and/or questions regarding the scoping process should be mailed no later than April 21, 1999, to: Commanding Officer, Northern Division Naval Facilities Engineering Command, Attention Mr. Bob Ostermueller (Code 202), 10 Industrial Highway Mail Stop 82, Lester, PA 19113–2090. Copies of comments may also be sent to Benet E. Bridgeman, Esq., County Attorney's Office, One West Street, Mineola, NY 11501–4810.

Dated: March 3, 1999.

Pamela A. Holden,

Lieutenant Commander, Judge Advocate General's Corps, U.S. Navy, Federal Register Liaison Officer.

[FR Doc. 99–5641 Filed 3–5–99; 8:45 am]

BILLING CODE 3810–FF–P

DEPARTMENT OF EDUCATION

Submission for OMB Review; Comment Request

AGENCY: Department of Education.

SUMMARY: The Acting Leader, Information Management Group, Office of the Chief Information Officer invites comments on the submission for OMB review as required by the Paperwork Reduction Act of 1995.

DATES: Interested persons are invited to submit comments on or before April 7, 1999.

ADDRESSES: Written comments should be addressed to the Office of Information and Regulatory Affairs, Attention: Danny Werfel, Desk Officer, Department of Education, Office of Management and Budget, 725 17th Street, NW., Room 10235, New Executive Office Building, Washington, DC 20503 or should be electronically mailed to the internet address DWERFEL@OMB.EOP.GOV. Requests for copies of the proposed information collection requests should be addressed to Patrick J. Sherrill, Department of Education, 400 Maryland Avenue, SW., Room 5624, Regional Office Building 3, Washington, DC 20202–4651, or should be electronically mailed to the internet address *Pat Sherrill@ed.gov,* or should be faxed to 202–708–9346.

FOR FURTHER INFORMATION CONTACT: Patrick J. Sherrill (202) 708–8196. Individuals who use a telecommunications device for the deaf (TDD) may call the Federal Information Relay Service (FIRS) at 1–800–877–8339 between 8 a.m. and 8 p.m., Eastern time, Monday through Friday.

SUPPLEMENTARY INFORMATION: Section 3506 of the Paperwork Reduction Act of 1995 (44 U.S.C. Chapter 35) requires that the Office of Management and Budget (OMB) provide interested Federal agencies and the public an early opportunity to comment on information collection requests. OMB may amend or waive the requirement for public consultation to the extent that public participation in the approval process would defeat the purpose of the information collection, violate State or Federal law, or substantially interfere with any agency's ability to perform its statutory obligations. The Acting Leader, Information Management Group, Office of the Chief Information Officer, publishes that notice containing proposed information collection requests prior to submission of these requests to OMB. Each proposed information collection, grouped by office, contains the following: (1) Type of review requested, e.g. new, revision,

extension, existing or reinstatement; (2) Title; (3) Summary of the collection; (4) Description of the need for, and proposed use of, the information; (5) Respondents and frequency of collection; and (6) Reporting and/or Recordkeeping burden. OMB invites public comment at the address specified above. Copies of the requests are available from Patrick J. Sherrill at the address specified above.

Dated: March 2, 1999.

Joseph Schubart,

Acting Leader, Information Management Group, Office of the Chief Information Officer.

Office of Educational Research and Improvement

Type of Review: New.

Title: Data Collection for Program for International Student Assessment (PISA).

Frequency: One-time field test; full-scale study every 3 years.

Affected Public: Individuals or households; Not-for-profit institutions.

Reporting and Recordkeeping Hour Burden:

Responses: 1,860.

Burden Hours: 4,825.

Abstract: PISA will collect policy-oriented and internationally-comparable indicators of student achievement at the ''end'' of secondary school on a timely and regular basis (every three years). For comparability with other education systems around the world, 15-year-old students will be assessed in the U.S., and comparisons of results will be made with approximately 30 countries.

[FR Doc. 99–5555 Filed 3–5–99; 8:45 am]

BILLING CODE 4000–01–P

DEPARTMENT OF EDUCATION

Demonstration Projects To Ensure Students With Disabilities, Receive a Quality Higher Education

AGENCY: Office of Postsecondary Education; Department of Education.

ACTION: Notice inviting individuals to serve as field readers.

SUMMARY: The Office of Higher Education Programs invites interested individuals to apply to serve as field readers to evaluate grant applications submitted for funding for fiscal year 1999 for the Demonstration Projects to Ensure Students with Disabilities Receive a Quality Higher Education program. The Demonstration Projects to Ensure Students with Disabilities Receive a Quality Higher Education program supports model demonstration projects to provide technical assistance or professional development for faculty and administrators in institutions of higher education (IHEs) in order to provide them with the skills and supports they need to provide students with disabilities a quality postsecondary education and to disseminate research and provide training to other IHEs.

DATES: Any individual interested in serving as a field reader should mail or fax his or her resume to the address listed in the **FOR FURTHER INFORMATION CONTACT** section of this notice no later than April 5, 1999, indicating the program in which he or she is interested in serving as a field reader. Resumes should not exceed two pages.

Duties and Compensation of Field Readers

Field readers will review applications according to the applicable published selection criteria. Each field reader will serve for a period of approximately five days. Each field reader who is selected will receive compensation for certain travel expenses and an honorarium. For further information on this competition, please refer to Title VII, Part D, of the Higher Education Act of 1965, as amended, and to the application notice for this competition to be published in the **Federal Register** soon.

Field Reader Qualifications

The Department is seeking experienced and knowledgeable professionals who are experts in the educational needs of students with disabilities in postsecondary education. These professionals should be current with issues surrounding program evaluation and dissemination, synthesizing research, providing professional development to faculty and administrators within IHEs, and helping IHEs adopt innovations. Field readers may come from IHEs or other settings in which qualified individuals are employed. Field readers must have the expertise necessary to assess accurately the applicant's showing on each of the applicable selection criterion.

FOR FURTHER INFORMATION CONTACT: Amie Amiot, Demonstration Projects to Ensure Students with Disabilities Receive a Quality Higher Education program, Post Office Box 23764, Washington, D.C. 20026–3764. Telephone: (202) 260–0415. Inquiries may be sent by e-mail to Amie—Amiot@ed.gov or by Fax to (202) 260–9271. Individuals who use a telecommunications device for the deaf (TDD) may call the Federal Information Relay Service (FIRS) at 1–800–877–8339 between 8 a.m. and 8 p.m., Eastern time, Monday through Friday.

Individuals with disabilities may obtain this document in an alternate format (e.g., Braille, large print, audiotape, or computer diskette) on request to the contact person listed in the preceding paragraph.

Electronic Access to This Document

Anyone may view this document, as well as all other Department of Education documents published in the **Federal Register**, in text or portable document format (pdf) on the World Wide Web at either of the following sites:

http://ocfo.ed.gov/fedreg.htm
http://www.ed.gov/news.html

To use the pdf you must have the Adobe Acrobat Reader Program with Search, which is available free at either of the previous sites. If you have questions about using the pdf, call the U.S. Government Printing Office toll free at 1–888–293–6498.

Anyone may also view these documents in text copy only on an electronic bulletin board of the Department. Telephone: (202) 219–1511 or, toll free, 1–800–222–4922. The documents are located under Option G-Files/Announcements, Bulletins and Press Releases.

Note: The official version of a document is the document published in the **Federal Register**.

Program Authority: 20 U.S.C.1140 *et seq.*

David A. Longanecker,

Assistant Secretary for Postsecondary Education.

[FR Doc. 99–5624 Filed 3–5–99; 8:45 am]

BILLING CODE 4000–01–P

DEPARTMENT OF EDUCATION

[CFDA NO.: 84.235C]

Office of Special Education and Rehabilitative Services Systems-Change Projects to Expand Employment Opportunities for Individuals With Mental or Physical Disabilities, or Both, Who Receive Public Support

ACTION: Withdrawal of notice inviting applications for new awards for fiscal year 1999

SUMMARY: On January 8, 1999 the Secretary published in the **Federal Register** (64 FR 1183) a notice inviting applications for new awards for fiscal year (FY) 1999 under the Systems-Change Projects to Expand Employment Opportunities for Individuals With Mental or Physical Disabilities, or Both, Who Receive Public Support program. Funds previously identified to support this program have been reallocated to other activities within the Office of

Special Education and Rehabilitative Services. The purpose of this notice is to withdraw the invitation for applications for new awards.

SUPPLEMENTARY INFORMATION: It is anticipated that a competition for new grants will be held in FY 2000. If a competition is held, a notice inviting applications for new awards for FY 2000 will be published in the **Federal Register** at a later date.

FOR FURTHER INFORMATION CONTACT: Pedro Romero, U.S. Department of Education, 400 Maryland Avenue, S.W., Room 3316, Switzer Building, Washington, D.C. 20202–4725. Telephone: (202) 205–9797. Individuals who use a telecommunications device for the deaf (TDD) may call the Federal Information Relay Service (FIRS) at 1–800–877–8339 between 8 a.m. and 8 p.m., Eastern time, Monday through Friday.

Individuals with disabilities may obtain this document in an alternate format (e.g., Braille, large print, audiotape, or computer diskette) on request to the contact person listed in the preceding paragraph.

Electronic Access to This Document

Anyone may view this document, as well as all other Department of Education documents published in the **Federal Register**, in text or portable document format (pdf) on the World Wide Web at either of the following sites:

http://ocfo.ed.gov/fedreg.htm
http://www.ed.gov/news.html

To use the pdf you must have the Adobe Acrobat Reader Program with Search, which is available free at either of the previous sites. If you have questions about using the pdf, call the U.S. Government Printing Office toll free at 1–888–293–6498.

Anyone may also view these documents in text copy only on an electronic bulletin board of the Department. Telephone: (202) 219–1511 or, toll free, 1–800–222–4922. The documents are located under Option G—Files/Announcements, Bulletins and Press Releases.

Note: The official version of a document is the document published in the **Federal Register**.

Program Authority: Title III, section 303(b) of the Rehabilitation Act of 1973, as amended (29 U.S.C. 762(b)(3)).

Dated: March 3, 1999.

Judith E. Heumann,

Assistant Secretary for Special Education and Rehabilitative Services.

[FR Doc. 99–5623 Filed 3–5–99; 8:45 am]

BILLING CODE 4000–01–U

DEPARTMENT OF ENERGY

Environmental Management Site-Specific Advisory Board, Pantex Plant, Amarillo, TX

AGENCY: Department of Energy.

ACTION: Notice of open meeting.

SUMMARY: This notice announces a meeting of the Environmental Management Site-Specific Advisory Board (EM SSAB), Pantex Plant, Amarillo, Texas. The Federal Advisory Committee Act (Pub. L. 92–463, 86 Stat. 770) requires that public notice of these meetings be announced in the **Federal Register**.

DATE AND TIME: Tuesday, March 23, 1999: 1:00 p.m.–5:00 p.m.

ADDRESSES: Carson County Square House Museum, Panhandle, Texas.

FOR FURTHER INFORMATION CONTACT: Jerry S. Johnson, Assistant Area Manager, Department of Energy, Amarillo Area Office, P.O. Box 30030, Amarillo, TX 79120 (806) 477–3125.

SUPPLEMENTARY INFORMATION:

Purpose of the Committee

The Board provides input to the Department of Energy on Environmental Management strategic decisions that impact future use, risk management, economic development, and budget prioritization activities.

Tentative Agenda

1:00 p.m. Welcome—Agenda Review—Approval of Minutes
1:15 p.m. Co-Chair Comments
1:30 p.m. Groundwater Presentation
2:30 p.m. Groundwater Question & Answer
2:45 p.m. Break
3:00 p.m. Sealed Inserts Update
3:30 p.m. Ex-Officio Reports
4:00 p.m. Updates—Occurrence Reports—DOE
4:30 p.m. Task Force/Subcommittee Minutes
4:50 p.m. Closing Remarks
5:00 p.m. Adjourn

Public Participation

The meeting is open to the public, and public comment will be invited throughout the meeting. Written statements may be filed with the Committee either before or after the meeting. Written comments will be accepted at the address above for 15 days after the date of the meeting. Individuals who wish to make oral statements pertaining to agenda items should contact Jerry Johnson's office at the address or telephone number listed above. Requests must be received 5 days prior to the meeting and reasonable provision will be made to include the presentation in the agenda. The Designated Federal Official is empowered to conduct the meeting in a fashion that will facilitate the orderly conduct of business. Each individual wishing to make public comment will be provided a maximum of 5 minutes to present their comments at any time throughout the meeting.

Minutes

The minutes of this meeting will be available for public review and copying at the Pantex Public Reading Rooms located at the Amarillo College Lynn Library and Learning Center, 2201 South Washington, Amarillo, TX phone (806) 371–5400. Hours of operation are from 7:45 am to 10:00 pm, Monday through Thursday; 7:45 am to 5:00 pm on Friday; 8:30 am to 12:00 noon on Saturday; and 2:00 pm to 6:00 pm on Sunday, except for Federal holidays. Additionally, there is a Public Reading Room located at the Carson County Public Library, 401 Main Street, Panhandle, TX phone (806) 537–3742. Hours of operation are from 9:00 am to 7:00 pm on Monday; 9:00 am to 5:00 pm, Tuesday through Friday; and closed Saturday and Sunday as well as Federal Holidays. Minutes will also be available by writing or calling Jerry S. Johnson at the address or telephone number listed above.

Issued at Washington, DC on March 3, 1999.

Rachel M. Samuel,

Deputy Advisory Committee Management Officer.

[FR Doc. 99–5616 Filed 3–5–99; 8:45 am]

BILLING CODE 6450–01–P

DEPARTMENT OF ENERGY

Environmental Management Site-Specific Advisory Board, Kirtland Area Office (Sandia)

AGENCY: Department of Energy.

ACTION: Notice of open meeting.

SUMMARY: This notice announces a meeting of the Environmental Management Site-Specific Advisory Board (EM SSAB), Kirtland Area Office (Sandia). The Federal Advisory Committee Act (Pub. L. 92–463, 86 Stat. 770) requires that public notice of these meetings be announced in the **Federal Register**.

DATES: Wednesday, March 17, 1999: 6:00 p.m.–9:00 p.m. (MST).

ADDRESSES: Indian Pueblo Cultural Center, 2401 12th Street NW, Albuquerque, New Mexico 87104.

FOR FURTHER INFORMATION CONTACT: Mike Zamorski, Acting Manager, Department of Energy Kirtland Area Office, P.O. Box 5400, Albuquerque, NM 87185 (505) 845–4094.

SUPPLEMENTARY INFORMATION:

Purpose of the Board

The purpose of the Board is to make recommendations to DOE and its regulators in the areas of environmental restoration, waste management, and related activities.

Tentative Agenda

6:00 p.m. Call to Order/Roll Call—Hubert Joy, Chair
6:05 p.m. Transportation Presentation/Questions and Answers
7:05 p.m. Self Evaluation Report
7:50 p.m. Break
8:00 p.m. Public Comments
8:10 p.m. Chair's Report—Hubert Joy
8:15 p.m. Comments from Pacific Western Technologies—Leon Stepp
8:25 p.m. Board Retreat Report—Sue Dayton
8:35 p.m. Resignations
8:45 p.m. Vote on New Applicants
9:00 p.m. Adjourn

A final agenda will be available at the meeting Wednesday, March 17, 1999.

Public Participation

The meeting is open to the public. Written statements may be filed with the Committee either before or after the meeting. Individuals who wish to make oral statements pertaining to agenda items should contact Mike Zamorski's office at the address or telephone number listed above. Requests must be received 5 days prior to the meeting and reasonable provision will be made to include the presentation in the agenda. The Designated Federal Officer is empowered to conduct the meeting in a fashion that will facilitate the orderly conduct of business. Each individual wishing to make public comment will be provided a maximum of 5 minutes to present their comments. This notice is being published less than 15 days in advance of the meeting due to programmatic issues that needed to be resolved prior to publication.

Minutes

The minutes of this meeting will be available for public review and copying at the Freedom of Information Public Reading Room, 1E–190, Forrestal Building, 1000 Independence Avenue, SW, Washington, DC 20585 between 9:00 a.m. and 4 p.m., Monday-Friday, except Federal holidays. Minutes will also be available by writing to Mike Zamorski, Department of Energy Kirtland Area Office, P.O. Box 5400, Albuquerque, NM 87185, or by calling (505) 845–4094.

Issued at Washington, DC on March 4, 1999.

Rachel M. Samuel,

Deputy Advisory Committee Management Officer.

[FR Doc. 99–5617 Filed 3–5–99; 8:45 am]

BILLING CODE 6450–01–P

DEPARTMENT OF ENERGY

Environmental Management Site-Specific Advisory Board, Fernald

AGENCY: Department of Energy.

ACTION: Notice of open meeting.

SUMMARY: This notice announces a meeting of the Environmental Management Site-Specific Advisory Board (EM SSAB), Fernald. The Federal Advisory Committee Act (Pub. L. 92–463, 86 Stat. 770) requires that public notice of these meetings be announced in the **Federal Register**.

DATES: Saturday, March 13, 1999; 8:30 a.m.–12:00 p.m. (public comment session: 11:30 a.m.–11:45 a.m.).

ADDRESSES: Fernald Environmental Management Project, Large Laboratory Conference Room, 7400 Willey Road, Hamilton, Ohio.

FOR FURTHER INFORMATION CONTACT: Gwen Doddy, Fernald Citizens' Advisory Board (FCAB), c/o Phoenix Environmental, P.O. Box 544, Ross, Ohio 45061, or call the FCAB office at (513) 648–6478.

SUPPLEMENTARY INFORMATION:

Purpose of the Board

The purpose of the Board is to make recommendations to DOE and its regulators in the areas of future use, cleanup levels, waste disposition and cleanup priorities at the Fernald site.

Tentative Agenda

8:30 a.m. Call to Order
8:30–8:45 Chairs Remarks and Announcements
8:45–9:00 Site Progress and Issues
—Leachate Piping Leaks
—First Waste Loadout
—Waste Shipping Resumption
—Safe Shutdown Completion
9:00–9:15 Transportation Workshop Update
9:15–9:30 Nye County Request for Support
9:30–10:00 Future of Fernald Workshop Planning
10:00–10:15 Break
10:15–11:00 Nuclear Materials Disposition Planning
11:00–11:30 Silos Proof of Principle and Radon
11:30–11:45 Public Comment
11:45–12:00 Wrap Up
12:00 p.m. Adjourn

A final agenda will be available at the meeting, Saturday, March 13, 1999.

Public Participation

The meeting is open to the public. Written statements may be filed with the Board chair either before or after the meeting. Individuals who wish to make oral statements pertaining to agenda items should contact the Board chair at the address or telephone number listed above. Requests must be received 5 days prior to the meeting and reasonable provision will be made to include the presentation in the agenda. The Designated Federal Officer, Gary Stegner, Public Affairs Officer, Ohio Field Office, U.S. Department of Energy, is empowered to conduct the meeting in a fashion that will facilitate the orderly conduct of business. Each individual wishing to make public comment will be provided a maximum of 5 minutes to present their comments. This notice is being published less than 15 days in advance of the meeting due to a late decision to hold the meeting. This was necessary to complete the planning efforts for the Future of Fernald Workshop to be held in mid-April.

Minutes

The minutes of this meeting will be available for public review and copying at the Freedom of Information Public Reading Room, 1E–190, Forrestal Building, 1000 Independence Avenue, SW, Washington, DC 20585 between 9:00 a.m. and 4:00 p.m., Monday-Friday, except Federal holidays. Minutes will also be available by writing to Gwen Doddy, Fernald Citizens' Advisory Board, c/o Phoenix Environmental, P.O. Box 544, Ross, Ohio 45061 or by calling the FCAB Office at (513) 648–6478.

Issued at Washington, DC on March 3, 1999.

Rachel M. Samuel,

Deputy Advisory Committee Management Officer.

[FR Doc. 99–5618 Filed 3–5–99; 8:45 am]

BILLING CODE 6450–01–P

DEPARTMENT OF ENERGY

Environmental Management Site-Specific Advisory Board, Nevada Test Site

AGENCY: Department of Energy.

ACTION: Notice of open meeting.

SUMMARY: Pursuant to the provisions of the Federal Advisory Committee Act (Public Law 92–463, 86 Stat. 770) notice

is hereby given of the following Advisory Committee meeting: Environmental Management Site-Specific Advisory Board (EM SSAB), Nevada Test Site.

DATES: Wednesday, April 7, 1999: 5:30 p.m.–9:00 p.m.

ADDRESS: U.S. Department of Energy, Nevada Support Facility, Great Basin Room, 232 Energy Way, North Las Vegas, Nevada.

FOR FURTHER INFORMATION CONTACT: Kevin Rohrer, U.S. Department of Energy, Office of Environmental Management, P.O. Box 98518, Las Vegas, Nevada 89193–8513, phone: 702–295–0197.

SUPPLEMENTARY INFORMATION: Purpose of the Board: The purpose of the Advisory Board is to make recommendations to DOE and its regulators in the areas of environmental restoration, waste management, and related activities.

Tentative Agenda

5:30 pm Call to Order
5:40 pm Presentations
7:00 pm Public Comment/Questions
7:30 pm Break
7:45 pm Review Action Items
8:00 pm Approve Meeting Minutes
8:10 pm Committee Reports
8:45 pm Public Comment
9 pm Adjourn

Copies of the final agenda will be available at the meeting.

Public Participation: The meeting is open to the public. Written statements may be filed with the Committee either before or after the meeting. Individuals who wish to make oral statements pertaining to agenda items should contact Kevin Rohrer, at the telephone number listed above. Requests must be received 5 days prior to the meeting and reasonable provision will be made to include the presentation in the agenda. The Designated Federal Officer is empowered to conduct the meeting in a fashion that will facilitate the orderly conduct of business.

Minutes: The minutes of this meeting will be available for public review and copying at the Freedom of Information Public Reading Room, 1E–190, Forrestal Building, 1000 Independence Avenue, SW, Washington, DC 20585 between 9:00 a.m. and 4 p.m., Monday–Friday, except Federal holidays. Minutes will also be available by writing to Kevin Rohrer at the address listed above.

Issued at Washington, DC on March 3, 1999.

Rachel M. Samuel,

Deputy Advisory Committee Management Officer.

[FR Doc. 99–5619 Filed 3–5–99; 8:45 am]

BILLING CODE 6450–01–P

DEPARTMENT OF ENERGY

Office of Energy Efficiency and Renewable Energy

Optional Preproposal Process for the National Industrial Competitiveness Through Energy, Environment and Economics (NICE ^{3}) Program

AGENCY: Golden Field Office, Department of Energy (DOE).

ACTION: Notice. Optional preproposal process for potential applicants under the DOE NICE ^{3} program solicitation.

SUMMARY: The Office of Industrial Technologies of the Department of Energy is funding a State Grant Program entitled National Industrial Competitiveness through Energy, Environment, and Economics (NICE^3). The goals of the NICE^3 Program are to improve energy efficiency, promote cleaner production, and to improve competitiveness in industry.

SUPPLEMENTARY INFORMATION:

Background

The intent of the NICE^3 program is to fund projects that have completed the research and development stage and are ready to demonstrate a fully integrated commercial unit. Eligible applicants for funding include any authorized agency of the 50 States, the District of Columbia, the U.S. Virgin Islands, the Commonwealth of Puerto Rico, and any territory or possession of the United States. Local governments, State and private universities, private non-profits, private businesses, and individuals, who are not eligible as direct applicants, must work with the appropriate State agencies in developing projects and forming participation arrangements. The state applicant is required to have an industrial partner to be eligible for grant consideration.

The Catalog of Federal Domestic Assistance number assigned to this program is 81.105. It is anticipated that up to $6 million in Federal funds will be made available in FY 2000 by DOE for the May 1999 solicitation. 50% cost sharing is required by all applicants and/or cooperating project participants. The DOE share for each award shall not exceed $425,000. The industrial partner may receive a maximum of $400,000 in DOE funding. A maximum of $25,000, or 10% of the total amount to industry, whichever is less, may be used to support the state applicant's cost share, if any, for costs associated with technology transfer/dissemination, marketing, etc.

Preproposal

Prior to issuance of the solicitation, the DOE offers potential applicants a chance to submit to the Golden Field Office a brief description of their proposed project. The submissions should not exceed two pages and should adhere to the format laid out in the preproposal format. DOE's technical staff will review these abstracts and provide constructive feedback to the potential applicant within a two week period. The submission of a preproposal abstract is not mandatory for submitting an application under the May 1999 solicitation. The DOE reviews and comments under the preproposal process will not be used by DOE in evaluating or awarding applications under the solicitation. All abstracts must be submitted through a state agency.

DATES: A brief description of the proposed project can be submitted to the Golden Field Office on or before April 2, 1999.

FOR FURTHER INFORMATION CONTACT: Eric Hass, at (303) 275–4728, or Steve Blazek, at (303) 275–4723, at the U.S. Department of Energy Golden Field Office, 1617 Cole Boulevard, Golden, Colorado 80401, FAX (303) 275–4788. In addition, information on the NICE^3 program can be located at http://www.oit.doe.gov/Access/nice3. The Contract Specialist is James Damm, at (303) 275–4744.

Issued in Golden, Colorado, on February 25, 1999.

Matthew A. Barron,

Acting Procurement Director, GO.

[FR Doc. 99–5615 Filed 3–5–99; 8:45 am]

BILLING CODE 6450–01–P

DEPARTMENT OF ENERGY

Federal Energy Regulatory Commission

[Docket No. TM99–4–34–000]

Florida Gas Transmission Company; Notice of Proposed Changes in FERC Gas Tariff

March 2, 1999.

Take notice that on February 25, 1999, Florida Gas Transmission Company (FGT) tendered for filing to become part of its FERC Gas Tariff, Third Revised Volume No. 1, effective April 1, 1999, the following tariff sheets:

Thirty-Second Revised Sheet No. 8A
Twenty-Third Revised Sheet No. 8A.01
Twenty-Fourth Revised Sheet No. 8A.02
Twenty-Eighth Revised Sheet No. 8B
Twenty-First Revised Sheet No. 8B.01

FGT states that Section 27 of the General Terms and Conditions (GTC) of its Tariff provides for the recovery by FGT of gas used in the operation of its system and gas lost from the system or otherwise unaccounted for. The fuel reimbursement charges pursuant to Section 27 consist of the Fuel Reimbursement Charge Percentage (FRCP), designed to recover current fuel usage on an in-kind basis, and the Unit Fuel Surcharge (UFS), designed to recover or refund previous under or overcollections on a cash basis. Both the FRCP and the UFS are applicable to Market Area deliveries and are effective for seasonal periods, changing effective each April 1 (for the Summer Period) and each October 1 (for the Winter Period).

FGT states that it is filing to establish an FRCP of 2.76% to become effective April 1, 1999 based on the actual company fuel use, lost and unaccounted for volumes, and Market Area deliveries for the period from April 1, 1998 through September 30, 1998. FGT further states that it is filing to establish a Summer Period UFS of <$0.0050> per MMBtu to become effective April 1, 1999.

Any person desiring to be heard or to protest said filing should file a motion to intervene or a protest with the Federal Energy Regulatory Commission, 888 First Street, N.E., Washington, D.C. 20426, in accordance with Sections 385.214 or 385.211 of the Commission's Rules and Regulations. All such motions or protests must be filed in accordance with Section 154.210 of the Commission's Regulations. Protests will be considered by the Commission in determining the appropriate action to be taken, but will not serve to make protestants parties to the proceedings. Any person wishing to become a party must file a motion to intervene. Copies of this filing area on file with the Commission and are available for public inspection in the Public Reference Room. This filing may be viewed on the web at http://www.ferc.fed.us/online/rims.htm (call 202–208–2222 for assistance).

David P. Boergers,

Secretary.

[FR Doc. 99–5546 Filed 3–5–99; 8:45 am]

BILLING CODE 6717–01–M

DEPARTMENT OF ENERGY

Federal Energy Regulatory Commission

[Docket No. RP99–232–000]

Koch Gateway Pipeline Company; Notice of Proposed Changes To FERC Gas Tariff

March 2, 1999.

Take notice that on February 25, 1999, Koch Gateway Pipeline Company (Koch) tendered for filing as part of its FERC Gas Tariff, Fifth Revised Volume No. 1, the following tariff sheet, to become effective March 29, 1999.

Seventh Revised Sheet No. 1802

Koch states that the proposed tariff change is designed to provide customers with additional flexibility in submitting nominations during periods when Koch's or the customer's electronic communication systems have failed. The proposed change would allow customers to submit nominations via fax or by e-mail.

Koch states that copies of this filing have been served upon Koch's customers, state commissions and other interested parties.

Any person desiring to be heard or to protest said filing should file a motion to intervene or a protest with the Federal Energy Regulatory Commission, 888 First Street, N.E., Washington, D.C. 20426, in accordance with Sections 385.214 or 385.211 of the Commission's Rules and Regulations. All such motions or protests should be filed as provided in Section 154.210 of the Commission's Regulations. Protests will be considered by the Commission in determining the appropriate action to be taken, but will not serve to make protestants parties to the proceedings. Any person wishing to become a party must file a motion to intervene. Copies of this filing are on file with the Commission and area available for public inspection in the Public Reference Room. This filing may be viewed on the web at http://www.ferc.fed.us/online/rims.htm (call (202) 208–2222 for assistance).

David P. Boergers,

Acting Secretary.

[FR Doc. 99–5543 Filed 3–5–99; 8:45 am]

BILLING CODE 6717–01–M

DEPARTMENT OF ENERGY

Federal Energy Regulatory Commission

[Docket No. RP99–233–000]

Koch Gateway Pipeline Company; Notice of Proposed Changes in FERC Gas Tariff

March 2, 1999.

Take notice that on February 25, 1999, Koch Gateway Pipeline Company (Koch) tendered for filing as part of its FERC Gas Tariff, Fifth Revised Volume No. 1, the following tariff sheets, to become effective March 29, 1999.

Thirteenth Revised Sheet No. 1
Twenty-seventh Revised Sheet No. 20
Twenty-fourth Revised Sheet No. 21
Twenty-fifth Revised Sheet No. 22
Eighth Revised Sheet No. 805
Sixth Revised Sheet No. 1806

Koch states that it is submitting the above referenced tariff sheets to remove language no longer necessary within Koch's FERC Gas Tariff and to correct administrative errors.

Koch states that copies of this filing have been serve upon Koch's customers, state commissions and other interested parties.

Any person desiring to be heard or to protest said filing should file a motion to intervene or a protest with the Federal Energy Regulatory Commission, 888 First Street, N.E., Washington, D.C. 20426, in accordance with Sections 385.214 or 385.211 of the Commission's Rules and Regulations. All such motions or protests must be filed in accordance with Section 154.210 of the Commission's Regulations. Protests will be considered by the Commission in determining the appropriate action to be taken, but will not serve to make protestants parties to the proceedings. Any person wishing to become a party must file a motion to intervene. Copies of this filing are on file with the Commission and are available for public inspection in the Public Reference Room. This filing may be viewed on the web at http://www.ferc.fed.us/online/rims/htm (call 202–208–2222 for assistance).

David P. Boergers,

Secretary.

[FR Doc. 99–5544 Filed 3–5–99; 8:45 am]

BILLING CODE 6717–01–M

DEPARTMENT OF ENERGY

Federal Energy Regulatory Commission

[Docket No. RP99–234–000]

National Fuel Gas Supply Corporation; Notice of Proposed Changes in FERC Gas Tariff

March 2, 1999.

Take notice that on February 26, 1999, National Fuel Gas Supply Corporation (National), tendered for filing as part of its FERC Gas Tariff, Fourth Revised Volume No. 1, Tenth Revised Sheet No. 8, to become effective April 1, 1999.

National states that this filing reflects the quarterly adjustment to the reservation component of the EFT rate pursuant to the Transportation and Storage Cost Adjustment (TSCA) provision set forth in Section 23 of the General Terms and Conditions of National's FERC Gas Tariff.

National further states that copies of this compliance filing were served upon the Company's jurisdictional customers and the regulatory commissions of the States of New York, Ohio, Pennsylvania, Delaware, Massachusetts, and New Jersey.

Any person desiring to be heard or to protest said filing should file a motion to intervene or a protest with the Federal Energy Regulatory Commission, 888 First Street, N.E., Washington, D.C. 20426, in accordance with Sections 385.214 or 384.211 of the Commission's Rules and Regulations. All such motions or protests must be filed in accordance with Section 154.210 of the Commission's Regulations. Protests will be considered by the Commission's in determining the appropriate action to be taken, but will not serve to make protestants parties to the proceedings. Any person wishing to become a party must file a motion to intervene. Copies of this filing are on file with the Commission and are available for public inspection in the Public Reference Room. This filing may be viewed on the web at http://www.ferc.fed.us/online/rims.htm (call 202–208–2222 for assistance).

David P. Boergers,

Secretary.

[FR Doc. 99–5545 Filed 3–5–99; 8:45 am]

BILLING CODE 6717–01–M

DEPARTMENT OF ENERGY

Federal Energy Regulatory Commission

[Docket No. CP99–226–000]

Williston Basin Interstate Pipeline Company; Notice of Request Under Blanket Authorization

March 2, 1999.

Take notice that on February 23, 1999, Williston Basin Interstate Pipeline Company (Williston Basin), 200 North Third Street, Suite 300, Bismarck, North Dakota 58501, filed in Docket No. CP99–226–000 a request pursuant to Sections 157.205 and 157.211 of the Commission's Regulations under the Natural Gas Act (18 CFR 157.205 and 157.211) for authorization to continue to use two existing taps to effectuate natural gas transportation deliveries to Montana-Dakota Utilities Company (Montana-Dakota) for ultimate use by additional end-use customers, who are not right-of-way grantors. Williston Basin makes such request under its blanket certificate issued in Docket Nos. CP82–487–000, *et al.*, pursuant to Section 7 of the Natural Gas Act, all as more fully set forth in the request on file with the Commission. The filing may be viewed on the web at http://www.ferc.fed.us/online/rims.htm (call 202–208–2222 for assistance).

Williston Basin states that during a recent audit, it discovered that additional end-use customers have been added to two existing transmission line taps installed for right-of-way grantor use. Specifically, it is stated that three additional end-use customers have been added to the existing Jungling transmission line tap at Station No. 5283+28, located in Burleigh County, North Dakota and that one additional end-use customer has been added to the existing Fuchs transmission line tap at Station No. 7703+32, located in Morton County, North Dakota. Williston Basin avers that the additional end-use customers were added to those taps without it's knowledge by Montana-Dakota, a local distribution company.

Williston Basin states that it was authorized to acquire and operate both the Jungling and Fuchs taps as right-of-way grantor taps pursuant to the Commission's Order dated February 13, 1985. It is estimated that the volumes delivered to each of those additional end-use customers is 110 Dt per year. Williston Basin indicates that it provides natural gas transportation deliveries to Montana-Dakota for ultimate use by additional end-use customers under Rate Schedules FT–1 and/or IT–1.

It is indicated that the proposed service will have no significant effect on Williston Basin's peak day or annual requirements and capacity has been determined to exist on Williston Basin's system to serve this natural gas market. Williston Basin states that it's tariff does not prohibit the addition of new delivery points, and that the volumes to be delivered are within the contractual entitlements of the customer.

Any person or the Commission's staff may, within 45 days after issuance of the instant notice by the Commission, file pursuant to Rule 214 of the Commission's Procedural Rules (19 CFR 385.214) a motion to intervene or notice of intervention and pursuant to Section 157.205 of the Regulations under the Natural Gas Act (18 CFR 157.205) a protest to the request. If no protest is filed within the time allowed therefor, the proposed activity shall be deemed to be authorized effective the day after the time allowed for filing a protest. If a protest is filed and not withdrawn within 30 days after the time allowed for filing a protest, the instant request shall be treated as an application for authorization pursuant to Section 7 of the Natural Gas Act.

David P. Boergers,

Secretary.

[FR Doc. 99–5542 Filed 3–5–99; 8:45 am]

BILLING CODE 6717–01–M

DEPARTMENT OF ENERGY

Federal Energy Regulatory Commission

[Project No. 3131–032]

S.R. Hydropower of Brockway Mills; Notice of Deferment of Revised Draft Environmental Assessment

March 2, 1999.

A notice that a revised draft environmental assessment (EA) for surrender of the license for the Brockways Mills Project was available for public view was issued January 21, 1999. The project is located on the Williams River, Windham County, Vermont.

Comments on the revised draft EA were requested to be filed with the Commission within 45 days of issuance of the notice. Commission staff, however, conducted a meeting of interested parties on February 16, 1999, in Bellows Falls, VT, on the surrender application. It was resolved at the meeting to defer the availability of the revised draft EA until legal matters with respect to the project license are settled. Therefore, by this notice, the revised

draft EA and request for comments is deferred until further notice.

For further information, please contact the project manager, Mr. Robert Grieve at (202) 219–2655 or Mr. Eddie Crouse at (202) 219–2794.

David P. Boergers,

Secretary.

[FR Doc. 99–5547 Filed 3–5–99; 8:45 am]

BILLING CODE 6717–01–M

DEPARTMENT OF ENERGY

Federal Energy Regulatory Commission

Notice of Amendment of License and Soliciting Comments, Motions to Intervene, and Protests

March 2, 1999.

Take notice that the following hydroelectric application has been filed with the Commission and is available for public inspection:

a. *Application Type:* Amendment to License.

b. *Project No.:* 1922–025.

c. *Date Filed:* February 12, 1999.

d. *Applicant:* Ketchikan Public Utilities.

e. *Name of Project:* Beaver Falls.

f. *Location:* The project is on the Beaver Falls Creek in the First Judicial District of Alaska. About 80 percent of the project occupies lands of the United States within the Tongass National Forest.

g. *Filed Pursuant to:* 18 CFR 4.200.

h. *Applicant Contact:* Ron Settje, Administrative Manager, City of Ketchikan, 2390 Tongass Avenue, Ketchikan, AK 99901, (907) 225–1000.

i. *FERC Contact:* Any questions on this notice should be addressed to J.W. Flint, at 202–219–2667.

j. *Deadline for filing comments and or motions:* April 5, 1999.

Please include the project number (1922–025) on any comments or motions filed.

k. *Description of Amendment:* The licensee proposes to change the project boundaries to reflect a settlement agreement reached with Cape Fox Corporation (CFC), a Native Village Corporation. The agreement with CFC entitles the licensee to occupy and own the project lands as well as additional land surrounding the project to be included in the project boundary.

The Beaver Falls Project is currently located on 19.61 acres of land on Beaver Falls Creek in Ketchikan, Alaska. Under the terms of the settlement, an additional 115,882 square feet will be added to and 38,686 square feet will be removed from the project. This increases the project area to 20.82 acres for a gain of 1.21 acres. All lands being added to the project belong to CFC.

l. *Locations of the application:* A copy of the application is available for inspection and reproduction at the Commission's Public Reference Room, located at 888 First Street, NE, Room 2A, Washington, D.C. 20426, or by calling (202) 208–1371. The application may be viewed on the web at www.ferc.fed.us/online/rims.htm (call (202) 208–2222 for assistance). A copy is also available for inspection and reproduction at the address in item h above.

m. This notice also consists of the following standard paragraphs: B, C1, and D2.

B. Comments, Protests, or Motions to Intervene—Anyone may submit comments, a protest, or a motion to intervene in accordance with the requirements of Rules of Practice and Procedure, 18 CFR 385.210, .211, .214. In determining the appropriate action to take, the Commission will consider all protests or other comments filed, but only those who file a motion to intervene in accordance with the Commission's Rules may become a party to the proceeding. Any comments, protests, or motions to intervene must be received on or before the specified comment date for the particular application.

C1. Filing and Service of Responsive Documents—Any filings must bear in all capital letters the title ''COMMENTS'', ''RECOMMENDATIONS FOR TERMS AND CONDITIONS'', ''PROTEST'', OR ''MOTION TO INTERVENE'', as applicable, and the Project Number of the particular application to which the filing refers. Any of the above-named documents must be filed by providing the original and the number of copies provided by the Commission's regulations to: The Secretary, Federal Energy Regulatory Commission, 888 First Street, N.E., Washington, D.C. 20426. A copy of any motion to intervene must also be served upon each representative of the Applicant specified in the particular application.

D2. Agency Comments—Federal, state, and local agencies are invited to file comments on the described application. A copy of the application may be obtained by agencies directly from the Applicant. If an agency does not file comments within the time specified for filing comments, it will be presumed to have no comments. One copy of an agency's comments must also be sent to the Applicant's representatives.

David P. Boergers,

Secretary.

[FR Doc. 99–5548 Filed 3–5–99; 8:45 am]

BILLING CODE 6717–01–M

ENVIRONMENTAL PROTECTION AGENCY

[FRL–6238–2]

Air Pollution Control; Proposed Actions on Clean Air Act Grants to the San Diego County Air Pollution Control District

AGENCY: Environmental Protection Agency (EPA).

ACTION: Notice; proposed determination with request for comments and notice of opportunity for public hearing.

SUMMARY: The U.S. EPA has made a proposed determination under section 105(c) of the Clean Air Act (CAA) that a reduction in expenditures of non-Federal funds for the San Diego County Air Pollution Control District (SDAPCD, or ''District'') in San Diego County, California is the result of a non-selective reduction in expenditures. This determination, when final, will permit the SDAPCD to keep the financial assistance awarded to it by EPA for FY–98 under section 105(c) of the CAA.

DATES: Comments and/or requests for a public hearing must be received by EPA at the address stated below by April 7, 1999.

ADDRESSES: All comments and/or requests for a public hearing should be mailed to: Sara Bartholomew, Grants and Program Integration Office (AIR–8), Air Division, U.S. EPA Region 9, 75 Hawthorne Street, San Francisco, California 94105–3901; FAX (415) 744–1076.

FOR FURTHER INFORMATION CONTACT: Sara Bartholomew, Grants and Program Integration Office (AIR–8), Air Division, U.S. EPA Region 9, 75 Hawthorne Street, San Francisco, California 94105–3901 at (415) 744–1250.

SUPPLEMENTARY INFORMATION: Under the authority of Section 105 of the CAA, EPA provides financial assistance (grants) to the SDAPCD to aid in the operation of its air pollution control programs. In FY–97 EPA awarded the SDAPCD $1,354,056, which represented approximately 11% of the District's budget. In FY–98, EPA awarded the SDAPCD $1,201,811, which represented approximately 9% of the District's budget.

Section 105(c)(1) of the CAA, 42 U.S.C. 7405(c)(1), provides that ''[n]o

agency shall receive any grant under this section during any fiscal year when its expenditures of non-Federal funds for recurrent expenditures for air pollution control programs will be less than its expenditures were for such programs during the preceding fiscal year. In order for [EPA] to award grants under this section in a timely manner each fiscal year, [EPA] shall compare an agency's prospective expenditure level to that of its second preceding year.'' EPA may still award financial assistance to an agency not meeting this requirement, however, if EPA, ''after notice and opportunity for public hearing, determines that a reduction in expenditures is attributable to a non-selective reduction in the expenditures in the programs of all Executive branch agencies of the applicable unit of Government.'' CAA section 105(c)(2). These statutory requirements are repeated in EPA's implementing regulations at 40 CFR 35.210(a).

In its FY–98 section 105 application, which EPA reviewed in the fall of 1997, the SDAPCD projected expenditures of non-Federal funds for recurrent expenditures (or its maintenance of effort (MOE)) of $12,361,507. This MOE at the time of the grant award was sufficient to meet the requirements of the CAA because it was higher than the actual FY97 MOE of $12,356,625. Based on this information, EPA awarded SDAPCD its FY98 grant in February, 1998. In December of 1998, SDAPCD reported an actual FY98 MOE of $12,050,625. This MOE level is not sufficient to meet the MOE requirements of the CAA because it is lower than the actual FY97 MOE, with a shortfall of $306,000 between the MOE for FY97 and FY98. In order for the District to be eligible to keep its FY98 grant and to receive the additional EPA funding which has become available to SDAPCD for FY99, EPA must make a determination under section 105(c)(2).

The SDAPCD is a single-purpose agency whose primary source of funding is permit fee revenue. Fees associated with permits issued by the SDAPCD go directly to the district to fund its operations. It is the ''unit of Government'' for section 105(c)(2) purposes. The reason for the lower MOE level in FY98 is a series of efficiencies that SDAPCD has implemented over the past three years, resulting in decreased district costs while maintaining service levels. The SDAPCD submitted documentation to EPA which states that the district MOE reductions resulted from agency process streamlining and automation improvements. As a result, the SDAPCD's overall budget and its MOE decreased. The District shows that it has been able to reduce its administrative expenditures in its programs through cost saving measures which do not affect the performance of its air programs or reduce its expenditures for substantive environmental program activities. For example, San Diego has reduced its expenditures by $630,600 through streamlining measures including elimination of positions not required to perform these jobs. These cost saving measures were taken not because fee revenues had declined, but because San Diego wanted to operate more efficiently. This budget reduction has been non-selective in that all programs within SDAPCD have been impacted.

In summary, the SDAPCD's MOE reductions resulted from agency process streamlining, automation improvements, and position reductions, leading to decreased district costs while maintaining service levels. EPA proposes to determine that the SDAPCD's lower FY–98 MOE level meets the section 105(c)(2) criteria as resulting from a non-selective reduction of expenditures. Pursuant to 40 CFR 35.210, this determination will allow the SDAPCD to keep the funds received from EPA for FY–98.

This document constitutes a request for public comment and an opportunity for public hearing as required by the Clean Air Act. All written comments received by April 7, 1999 on this proposal will be considered. EPA will conduct a public hearing on this proposal only if a written request for such is received by EPA at the address above by April 7, 1999.

If no written request for a hearing is received, EPA will proceed to the final determination. While notice of the final determination will not be published in the **Federal Register**, copies of the determination can be obtained by sending a written request to Sara Bartholomew at the above address.

Dated: February 25, 1999.

Matthew Haber,

Acting Director, Air Division, Region 9.

[FR Doc. 99–5666 Filed 3–5–99; 8:45 am]

BILLING CODE 6560–50–P

ENVIRONMENTAL PROTECTION AGENCY

[FRL–6238–8]

Proposed Administrative Agreement and Covenant Not To Sue Under Section 122(h) of CERCLA for the David Chemical Superfund Site

AGENCY: Environmental Protection Agency (EPA).

ACTION: Proposal of administrative agreement and covenant not to sue under section 122(h) of CERCLA with Precision Chrome, Inc. for the David Chemical Superfund site.

SUMMARY: In accordance with the Comprehensive Environmental Response, Compensation, and Liability Act of 1980 (''CERCLA''), as amended, 42 U.S.C. 9601 *et seq.*, notice is hereby given that a proposed Administrative Agreement and Covenant Not to Sue Under section 122(h) of CERCLA (''Agreement''), 42 U.S.C. 9622(h), for the David Chemical Superfund Site located in Chicago, Illinois, has been executed by the Settling Party, Precision Chrome, Inc. (''Precision Chrome''). The proposed Agreement has been approved by the Attorney General's delegate. The proposed Agreement would resolve certain potential claims of the United States under sections 106 and 107 of CERCLA, 42 U.S.C. 9606 and 9607, against Precision Chrome. The proposed Agreement would require Precision Chrome to pay the EPA Hazardous Substance Superfund $95,000 for reimbursement of response costs. No further EPA response actions are contemplated at this time.

DATES: Comments on the proposed Agreement must be received by EPA by April 7, 1999.

ADDRESSES: A copy of the proposed Agreement is available for review at U.S. EPA, Region 5, 77 West Jackson Boulevard, Chicago, Illinois 60604. Please contact Ms. Orelia E. Merchant at (312) 886–2241, prior to visiting the Region 5 office.

Comments on the proposed Agreement should be addressed to Orelia E. Merchant, Office of Regional Counsel, U.S. EPA, Region 5, 77 West Jackson Boulevard (Mail Code C–14J), Chicago, Illinois 60604.

FOR FURTHER INFORMATION CONTACT: Orelia E. Merchant at (312) 886–2241, of the U.S. EPA, Region 5, Office of Regional Counsel.

A 30-day period, commencing on the date of publication of this notice, is open for comments on the proposed Agreement pursuant to section 122(i) of CERCLA, 42 U.S.C. 9622(i). Comments should be sent to the address identified in this notice.

William E. Muno,

Director, Superfund Division, Region 5.

[FR Doc. 99–5665 Filed 3–5–99; 8:45 am]

BILLING CODE 6560–50–M

ENVIRONMENTAL PROTECTION AGENCY

[OPPTS–51923; FRL–6062–8]

Certain Chemicals; Premanufacture Notices

AGENCY: Environmental Protection Agency (EPA).

ACTION: Notice.

SUMMARY: Section 5 of the Toxic Substances Control Act (TSCA) requires any person who intends to manufacture or import a new chemical to notify EPA and comply with the statutory provisions pertaining to the manufacture or import of substances not on the TSCA Inventory. Section 5 of TSCA also requires EPA to publish receipt and status information in the **Federal Register** each month reporting premanufacture notices (PMN) and test marketing exemption (TME) application requests received, both pending and expired. The information in this document contains notices received from January 1, to January 31, 1999.

ADDRESSES: Written comments, identified by the document control number ''[OPPTS–51923]'' and the specific PMN number, if appropriate, should be sent to: Document Control Office (7407), Office of Pollution Prevention and Toxics, Environmental Protection Agency, 401 M St., SW., Rm. ETG–099 Washington, DC 20460.

Comments and data may also be submitted electronically by sending electronic mail (e-mail) to: oppt.ncic@epamail.epa.gov. Electronic comments must be submitted as an ASCII file avoiding the use of special characters and any form of encryption. Comments and data will also be accepted on disks in WordPerfect in 5.1/6.1 file format or ASCII file format. All comments and data in electronic form must be identified by the docket number [OPPTS–51923]. No Confidential Business Information (CBI) should be submitted through e-mail. Electronic comments on this notice may be filed online at many Federal Depository Libraries. Additional information on electronic submissions can be found under ''SUPPLEMENTARY INFORMATION'' of this document.

FOR FURTHER INFORMATION CONTACT: Susan B. Hazen, Director, Environmental Assistance Division (7408), Office of Pollution Prevention and Toxics, Environmental Protection Agency, Rm. E–531, 401 M St., SW., Washington, DC, 20460, (202) 554–1404, TDD (202) 554–0551; e-mail: TSCA-Hotline@epamail.epa.gov.

SUPPLEMENTARY INFORMATION: Under the provisions of TSCA, EPA is required to publish notice of receipt and status reports of chemicals subject to section 5 reporting requirements. The notice requirements are provided in TSCA sections 5(d)(2) and 5(d)(3). Specifically, EPA is required to provide notice of receipt of PMNs and TME application requests received. EPA also is required to identify those chemical submissions for which data has been received, the uses or intended uses of such chemicals, and the nature of any test data which may have been developed. Lastly, EPA is required to provide periodic status reports of all chemical substances undergoing review and receipt of notices of commencement.

A record has been established for this notice under docket number ''[OPPTS–51923]'' (including comments and data submitted electronically as described below). A public version of this record, including printed, paper versions of electronic comments, which does not include any information claimed as CBI, is available for inspection from 12 noon to 3 p.m., Monday through Friday, excluding legal holidays. The public record is located in the TSCA Nonconfidential Information Center (NCIC), Rm. NEM–B607, 401 M St., SW., Washington, DC 20460.

Electronic comments can be sent directly to EPA at:

oppt.ncic@epamail.epa.gov

Electronic comments must be submitted as an ASCII file avoiding the use of special characters and any form of encryption.

The official record for this notice, as well as the public version, as described above will be kept in paper form. Accordingly, EPA will transfer all comments received electronically into printed, paper form as they are received and will place the paper copies in the official record which will also include all comments submitted directly in writing. The official record is the paper record maintained at the address in ''ADDRESSES'' at the beginning of this document.

In the past, EPA has published individual notices reflecting the status of section 5 filings received, pending or expired, as well as notices reflecting receipt of notices of commencement. In an effort to become more responsive to the regulated community, the users of this information and the general public, to comply with the requirements of TSCA, to conserve EPA resources, and to streamline the process and make it more timely, EPA is consolidating these separate notices into one comprehensive notice that will be issued at regular intervals.

In this notice, EPA shall provide a consolidated report in the **Federal Register** reflecting the dates PMN requests were received, the projected notice end date, the manufacturer or importer identity, to the extent that such information is not claimed as confidential and chemical identity, either specific or generic depending on whether chemical identity has been claimed confidential. Additionally, in this same report, EPA shall provide a listing of receipt of new notices of commencement.

EPA believes the new format of the notice will be easier to understand by the interested public, and provides the information that is of greatest interest to the public users. Certain information provided in the earlier notices will not be provided under the new format. The status reports of substances under review, potential production volume, and summaries of health and safety data will not be provided in the new notices.

EPA is not providing production volume information in the consolidated notice since such information is generally claimed as confidential. For this reason, there is no substantive loss to the public in not publishing the data. Health and safety data are not summarized in the notice since it is recognized as impossible, given the format of this notice, as well as the previous style of notices, to provide meaningful information on the subject. In those submissions where health and safety data were received by the Agency, a footnote is included by the Manufacturer/Importer identity to indicate its existence. As stated below, interested persons may contact EPA directly to secure information on such studies.

For persons who are interested in data not included in this notice, access can be secured at EPA Headquarters in the NCIC at the address provided above. Additionally, interested parties may telephone the Document Control Office at (202) 260–1532, TDD (202) 554–0551, for generic use information, health and safety data not claimed as confidential or status reports on section 5 filings.

Send all comments to the address listed above. All comments received will be reviewed and appropriate amendments will be made as deemed necessary.

This notice will identify: (I) PMNs received; and (II) Notices of Commencement to manufacture/import.

I. 89 Premanufacture Notices Received From: 01/01/99 to 01/31/99

Case No.	Received Date	Projected Notice End Date	Manufacturer/Importer	Use	Chemical
P–99–0350	01/05/99	04/05/99	Huntsman Petrochemical Corp	(S) Metal working fluid	(S) Neodecanamide, *n*-[2-(2-hydroxyethoxy)ethyl]-*
P–99–0351	01/05/99	04/05/99	Huntsman Petrochemical Corp.	(S) Metal working fluid	(S) Amines, coco, *n*-[2-(2-hydroxyethoxy)ethyl]-*
P–99–0352	01/05/99	04/05/99	Huntsman Petrochemical Corp.	(S) Metal working fluid	(S) Dodecanamide, *n*-[2-(-hydroxyethoxy)ethyl]-*
P–99–0353	01/05/99	04/05/99	Huntsman Petrochemical Corp.	(S) Metal working fluid	(S) Decanamide, *n*-[2-(2-hydroxyethoxy)ethyl]-*
P–99–0354	01/05/99	04/05/99	Huntsman Petrochemical Corp.	(S) Metal-working fluid	(S) Amides, tall-oil fatty, *n*-[2-(2-hydroxyethoxy)ethyl]*
P–99–0355	01/05/99	04/05/99	Huntsman Petrochemical Corp.	(S) Metal-working fluid	(S) Octadecanamide, *n*-[2-(2-hydroxyethoxy)ethyl]-*
P–99–0356	01/05/99	04/05/99	Huntsman Petrochemical Corp.	(S) Metal-working fluid	(S) Isooctadecanamide, *n*-[2-(2-hydroxyethoxy)ethyl]-*
P–99–0357	01/05/99	04/05/99	Huntsman Petrochemical Corp.	(S) Metal-working fluid	(S) Amides, soya, *n*-[2-(2-hydroxyethoxy)ethyl]-*
P–99–0358	01/05/99	04/05/99	Huntsman Petrochemical Corp.	(S) Metal-working fluid	(S) Amides, castor-oil, *n*-[2-(2-hydroxyethoxy)ethyl]*
P–99–0359	01/08/99	04/08/99	H. B. Fuller Company	(S) Textile lamination	(G) Vinyl ester acrylic polymer
P–99–0360	01/08/99	04/08/99	H. B. Fuller Company	(S) Textile lamination	(G) Vinyl ester acrylic polymer
P–99–0361	01/08/99	04/08/99	H. B. Fuller Company	(S) Textile lamination	(G) Vinyl ester acrylic polymer
P–99–0362	01/08/99	04/08/99	H. B. Fuller Company	(S) Textile lamination	(G) Vinyl ester acrylic polymer
P–99–0363	01/08/99	04/08/99	H. B. Fuller Company	(S) Textile lamination	(G) Vinyl ester acrylic polymer
P–99–0364	01/08/99	04/08/99	H. B. Fuller Company	(S) Textile lamination	(G) Vinyl ester acrylic polymer
P–99–0365	01/11/99	04/11/99	CBI	(S) A raw material to make an agricultural chemical intermediate	(G) Substituted acetate
P–99–0366	01/11/99	04/11/99	Sivento Inc.	(S) Surface modifier for inorganic pigments/fillers	(S) Silsesquioxanes, 3-aminopropyl, iso-bu, formates (salts)*
P–99–0367	01/12/99	04/12/99	CBI	(G) Resin coating	(S) 8,11,14-trioxa-4,18-diazaheneicosanedioic acid, 4,18-bis(2-hydroxyethyl)-9,12 (9,13 or 10,12)-dimethyl-7,15-dioxo-, bis[methyl-2-[methyl-2-[(1-oxo-2-propenyl)oxy]ethoxy]ethyl]ester*
P–99–0368	01/11/99	04/11/99	CBI	(G) Water clarifier	(G) Quaternary ammonium salt
P–99–0369	01/11/99	04/11/99	CBI	(G) Water clarifier	(G) Quaternary ammonium salt
P–99–0370	01/13/99	04/13/99	H. B. Fuller Company	(S) Tile mortar binder	(G) Vinyl ester acrylic polymer
P–99–0371	01/13/99	04/13/99	H. B. Fuller Company	(S) Base polymer for acrylic paints	(G) Vinyl ester acrylic polymer
P–99–0372	01/13/99	04/13/99	H. B. Fuller Company	(S) Binder for paper air-filters	(G) Vinyl ester acrylic polymer
P–99–0373	01/13/99	04/13/99	H. B. Fuller Company	(S) Binder for fiberglass roofing shingle mats	(G) Vinyl ester acrylic polymer
P–99–0374	01/12/99	04/12/99	Bedoukian Research, Inc.	(S) Chemical intermediate	(G) Alken-yne substituted pyran
P–99–0375	01/12/99	04/12/99	Bedoukian Research, Inc.	(S) Chemical intermediate	(G) Unsaturated alcohol,(tetrahydro-2*h*-pyran-2-yl)oxy-, acetate
P–99–0376	01/12/99	04/12/99	Bedoukian Research, Inc.	(S) Chemical intermediate	(G) Hydroxy alkyldiene
P–99–0377	01/12/99	04/12/99	Bedoukian Research, Inc.	(S) Chemical intermediate	(G) Halogenated alkyldiene
P–99–0378	01/12/99	04/12/99	Dystar L. P.	(S) Fiber reactive dye for coloration of cellulose	(G) 1,3,5-naphthalenetrisulfonic acid, 7[2-(substituted)-4-[substituted]azo]-, salt
P–99–0379	01/12/99	04/12/99	Intercontinental Polymers, Inc.	(S) Isolated intermediate mixture	(G) Mixture of monoester and diester of hydroxyaryl phosphinyl substituted alkanoic acid.
P–99–0380	01/12/99	04/12/99	Intercontinental Polymers, Inc.	(S) Flame retardant polymeric fibers	(G) 1,4-benzenedicarboxylic acid, dimethyl ester, polymer with 1,2-ethanediol and hydroxyarylphosphinyl substituted alkanoic acid
P–99–0381	01/07/99	04/07/99	Marubeni Specialty Chemicals, Inc.	(G) Modified polyvinyl alcohol	(G) Modified polyvinyl alcohol
P–99–0382	01/12/99	04/12/99	Ashland Chemical Company	(G) Adhesive	(G) Copolymer of acrylic esters and styrene
P–99–0383	01/13/99	04/13/99	CBI	(G) Rheological component	(G) Polyester resin
P–99–0384	01/08/99	04/08/99	CBI	(G) Processing aid	(G) Derivative of a fatty amido amine
P–99–0385	01/15/99	04/15/99	CBI	(G) Lubricant, process aid	(G) Fatty alkyl phosphate, alkali metal salt
P–99–0386	01/15/99	04/15/99	CBI	(G) Colorant additive	(G) Perylene derivative

I. 89 Premanufacture Notices Received From: 01/01/99 to 01/31/99—Continued

Case No.	Received Date	Projected Notice End Date	Manufacturer/Importer	Use	Chemical
P–99–0387	01/15/99	04/15/99	CBI	(G) Commercial pesticide intermediate	(G) Substituted biphenylamine
P–99–0388	01/15/99	04/15/99	CBI	(G) Crosslinker	(G) Blocked trimer of isocyanates
P–99–0389	01/15/99	04/15/99	DIC Trading (USA), Inc.	(G) Manicures	(G) Alkyd resin
P–99–0390	01/19/99	04/19/99	Elf Atochem North America, Inc.	(S) Process intermediates (ethyl anthraquinone based)*	(S) 9,10-anthracenedione, 2-ethyl-, spent catalyst, from hydrogen peroxide manuf.*
P–99–0391	01/19/99	04/19/99	Elf Atochem North America, Inc.	(S) Process intermediates (butyl anthraquinone based)*	(S) 9,10-anthracenedione, 2-(1,1-dimethylethyl)-, spent catalyst, from hydrogen peroxide manuf.*
P–99–0392	01/19/99	04/19/99	Elf Atochem North America, Inc.	(S) Process intermediates (*n*-anyl anthraquinone based)*	(S) 9,10-anthracenedione, 2-(1,1-dimethylpropyl)-, spent catalyst, from hydrogen peroxide manuf.*
P–99–0393	01/19/99	04/19/99	Elf Atochem North America, Inc.	(S) Process intermediates (*i*-amyl anthraquinone based)*	(S) 9,10-anthracenedione, 2-(1,2-dimethylpropyl)-, spent catalyst, from hydrogen peroxide manuf.*
P–99–0394	01/19/99	04/19/99	3M Company	(S) Chemical intermediate	(G) Bis-arene complex
P–99–0395	01/19/99	04/19/99	3M Company	(G) Polymerization catalyst	(G) Bis-arene organometallic complex
P–99–0396	01/21/99	04/21/99	CBI	(G) Open, non-dispersive use	(G) Polyester/acrylic copolymer
P–99–0397	01/21/99	04/21/99	CBI	(G) Open, non-dispersive use	(G) Polyester/acrylic copolymer
P–99–0398	01/21/99	04/21/99	CBI	(G) Open, non-dispersive use	(G) Polyester/ acrylic copolymer
P–99–0399	01/21/99	04/21/99	CBI	(G) Open, non-dispersive use	(G) Polyester/ acrylic copolymer
P–99–0400	01/21/99	04/21/99	CBI	(G) Destructive use	(G) Polyester resin
P–99–0401	01/21/99	04/21/99	CBI	(G) Destructive use	(G) Polyester resin
P–99–0402	01/21/99	04/21/99	CBI	(G) Component of coating formulation	(G) Modified polyester
P–99–0403	01/25/99	04/25/99	OMG Fidelity, Inc.	(S) Source of nickle ions in metal finishing process	(S) Methanesulfonic acid, nickel (2+) salt*
P–99–0404	01/21/99	04/21/99	Owens Corning	(G) Develop a sizing to coating glass fibers	(G) Diadduct(monomaleate/ polyoxyethylene (n) stearic acid (monoester)/diethyl amine)bishpenol a diglycidylether-bisphenol a, copolymer, acetate, salt)
P–99–0405	01/20/99	04/20/99	Toray Marketing & Sales (America), Inc.	(G) Reactive substance for photosensitive compositions	(S) 1,2,3-propanetriol, polymer with (chloromethyl) oxirane, 2-[(1-oxo-2-propenyl)oxy] ethyl butanedioate*
P–99–0406	01/21/99	04/21/99	RAHN USA Corporation	(S) Uv/eb inks; uv/eb coatings; uv/eb adhesives; uv/eb fillers	(G) Polyester acrylate
P–99–0407	01/21/99	04/21/99	RAHN USA Corporation	(S) Uv/eb inks; uv/eb coatings; uv/eb adhesives; uv/eb fillers	(G) Polyester acrylate
P–99–0408	01/26/99	04/26/99	CBI	(G) Coating (wood and concrete)	(G) Water-borne polyurethane dispersion
P–99–0409	01/25/99	04/25/99	Air Products and Chemicals Inc.	(S) Site limited intermediate	(S) Propanenitrile, 3-[bis(2-hydroxyethyl)amino]-*
P–99–0410	01/25/99	04/25/99	3M Company	(G) Protective coatings	(G) Fluorochemical acrylate polymer
P–99–0411	01/25/99	04/25/99	CBI	(S) Base resin in uv/eb (ultraviolet light/electron beam) curable coating and adhesive formulations	(G) Multifunctional aromatic urethane urethane methacrylate oligomer
P–99–0412	01/25/99	04/25/99	NOF America Corporation	(S) Impact modifier	(G) Methacrylate graft copolymer
P–99–0413	01/20/99	04/20/99	CBI	(G) Sealants component	(G) Polymer of methylenebis[isocyanatobenzene] and mixed polyesters
P–99–0414	01/25/99	04/25/99	Pilot Chemical Company	(S) Moisturizer in cosmetics, shampoos and cleaners	(S) Chitosan, *n*-(3-carboxy-1-methylpropyl), 2-hydroxypropanoate (salt)*
P–99–0415	01/26/99	04/26/99	CBI	(G) Resin coating	(S) Phenol, 4,4′-(methylethylidene)bis-, polymer with (chloromethyl) oxirane, mixed diesters with propylene glycol acrylate hydrogen succinate and propylene glycol hydrogen succinate methacrylate*
P–99–0416	01/25/99	04/25/99	CBI	(G) Open - non-dispersive	(G) 4- [[1- [[2- (*r*) phenyl) amino carbonyl] -2 oxopropyl] azo] -3 nitro

I. 89 Premanufacture Notices Received From: 01/01/99 to 01/31/99—Continued

Case No.	Received Date	Projected Notice End Date	Manufacturer/Importer	Use	Chemical
P–99–0417	01/27/99	04/27/99	Dragoco, Inc.	(S) Cosmetic application exempted from tsca requirements; non-cosmetic applications: household cleaners, detergents, soaps, room fresheners, etc.	(S) 4*h*-4*a*, 9-methanoazuleno[5,6-*d*]-1,3-diaxole, octahydro-2,2,5,8,8,9*a*-hexamethyl-, (4*ar*, 5*r*, 7*as*, 9*r*)-*
P–99–0418	01/25/99	04/25/99	CBI	(G) Lubricant	(G) Polyol ester
P–99–0419	01/28/99	04/28/99	CBI	(G) Liquid water-based coating	(G) Vinyl ester polymer
P–99–0420	01/28/99	04/28/99	Eastman Chemical Company	(S) Dye for solution dyeing of nylon and polyester fiber; dye for use in printing inks	(G) Substituted anthracene-dimesylate polymer
P–99–0421	01/28/99	04/28/99	U.S. Polymers Inc.	(S) Binder for coatings	(G) Reaction product of: phenolic resin - cyclic aliphatic alcohols, trimellitic anhydride and aliphatic carbonates
P–99–0422	01/27/99	04/27/99	CBI	(G) Coating component	(G) (polyalkoxy, polyester) modified acrylate, reaction product with poly (cyanoalkane-alkylene glycol)
P–99–0423	01/27/99	04/27/99	CBI	(G) Open, non-dispersive	(G) Polyalkylene oxide dialkylamine
P–99–0424	01/28/99	04/28/99	Eastman Chemical Company	(S) Chemical intermediate	(G) Dimesylate
P–99–0425	01/28/99	04/28/99	CBI	(G) Flame retardant	(G) Polymer of an alkyl phosphate ester, phosphorus pentoxide and an alkyl oxide
P–99–0426	01/28/99	04/28/99	CBI	(S) Polymerizable monomer	(G) Alkyl acrylate
P–99–0427	01/28/99	04/28/99	Union Carbide Corporation	(G) Solvent	(S) Ethene, hydroformylation products, by-products from*
P–99–0428	01/28/99	04/28/99	Union Carbide Corporation	(G) Solvent	(S) Propene, hydroformylation products, by-products from*
P–99–0429	01/28/99	04/28/99	Union Carbide Corporation	(G) Solvent	(S) Butene, hydroformylation products, by-products from*
P–99–0430	01/28/99	04/28/99	Union Carbide Corporation	(G) Solvent	(S) Butanal, condensation products, hydrogenated, by-products from*
P–99–0431	01/28/99	04/28/99	Union Carbide Corporation	(G) Solvent	(S) 4-nonanone, 2,6,8-trimethyl-, hydrogenated, by-products from*
P–99–0432	01/28/99	04/28/99	Union Carbide Corporation	(G) Solvent	(S) 4-heptanone, 2,6-dimethyl, hydrogenated, by-products from*
P–99–0433	01/29/99	04/29/99	CBI	(S) Site limited intermediate; surfactant	(G) Alkoxylated alkyloxypropylamine
P–99–0434	01/29/99	04/29/99	CBI	(S) Site limited intermediate; surfactant	(G) Alkoxylated alkyloxypropylamine
P–99–0435	01/29/99	04/29/99	CBI	(G) Additive, open, non-dispersive use	(G) Polyether modified fatty acids
P–99–0436	01/29/99	04/29/99	CBI	(G) Surfactant	(G) Alkoxylated alkyloxy propylamine oxide
P–99–0437	01/29/99	04/29/99	CBI	(G) Surfactant	(G) Alkoxylated alkyloxy propylamine oxide
P–99–0438	01/29/99	04/29/99	CBI	(G) Colorant	(G) Sulfonated copper phthalocyanine, substituted with aromatic sulfonamid, sodium salt

II. 25 Notices of Commencement Received From: 01/01/99 to 01/31/99

Case No.	Received Date	Commencement/Import Date	Chemical
P–93–0392	01/13/99	01/05/99	(G) Epoxy resin of epoxydized bisphenol-a-novolac
P–94–1573	01/19/99	01/11/99	(G) Hydrocarbon modified rosin resin
P–94–2132	01/26/99	01/15/99	(G) Polyester isocyanate polymer
P–95–0486	01/19/99	12/14/98	(G) Condensation polyester of glycols and diacids
P–95–1673	01/15/99	09/29/98	(G) Dimethylvinylgroup functional siloxane
P–96–1576	01/25/99	01/19/99	(G) Trialkyl substituted benzenealkanenitrile
P–98–0311	01/20/99	01/15/99	(S) Phenol, 3-pentadecyl-, phosphate (3:1)*
P–98–0499	01/11/99	12/29/98	(S) Coconut oil, polymer with polyethylene glycol and trimetylolpropane*
P–98–0554	01/11/99	12/14/98	(G) Amino functional polyether
P–98–0609	01/13/99	12/17/98	(G) Tetrasubstituted alkane
P–98–0661	01/21/99	01/11/99	(G) Polyether modifier acrylic ester with dimethylamino groups
P–98–0910	01/20/99	01/13/99	(G) Alipahatic polycarboxylic acid, perester with branched chain fatty alcohol
P–98–1015	01/25/99	01/13/99	(G) Ester

II. 25 Notices of Commencement Received From: 01/01/99 to 01/31/99—Continued

Case No.	Received Date	Commencement/Import Date	Chemical
P–98–1037	01/20/99	01/12/99	(G) Hydrocarbon resin
P–98–1050	01/07/99	01/04/99	(G) Quartenary ammonium phosphate salt
P–98–1054	01/07/99	01/04/99	(G) Quartenary ammonium salt
P–98–1073	01/11/99	12/16/98	(G) Alkyl tin salt
P–98–1078	01/11/99	12/04/98	(G) Multifuctional aliphatic urethane acrylate
P–98–1083	01/25/99	01/08/99	(G) Acryl styrene random copolymer
P–98–1084	01/25/99	01/08/99	(G) Acryl styrene random colpolymer
P–98–1136	01/05/99	12/07/98	(G) Random copolyamic acid
P–98–1169	01/06/99	12/17/98	(G) Modified acrylic resin
P–98–1170	01/06/99	12/17/98	(G) Modified acrylic resin
P–98–1218	01/20/99	01/13/99	(G) Sulfosilanol urethane
P–98–1272	01/06/99	01/02/99	(G) Fluoroalkyl acrylate copolymer

List of Subjects

Environmental protection, Premanufacture notices.

Dated: February 22, 1999.

Oscar Morales,

Acting Director, Information Management Division, Office of Pollution Prevention and Toxics.

[FR Doc. 99–5589 Filed 3–5–99; 8:45 am]

BILLING CODE 6560–50–F

EXPORT-IMPORT BANK OF THE UNITED STATES

Notice of Open Special Meeting of the Advisory Committee of the Export-Import Bank of the United States (Export-Import Bank)

SUMMARY: The Advisory Committee was established by Pub. L. 98–181, November 30, 1983, to advise the Export-Import Bank on its programs and to provide comments for inclusion in the reports of the Export-Import Bank of the United States to Congress.

Time and Place: Tuesday, March 30, 1999, at 9:30 a.m. to 12:00 noon. The meeting will be held at the Export-Import Bank in Room 1143, 811 Vermont Avenue, NW, Washington, DC 20571.

Agenda: This meeting will include a discussion of the types of programs, products and marketing efforts Export Development Corporation (EDC) of Canada uses to reach small business.

Public Participation: The meeting will be open to public participation, and the last 10 minutes will be set aside for oral questions or comments. Members of the public may also file written statement(s) before or after the meeting. If any person wishes auxiliary aids (such as a sign language interpreter) or other special accommodations, please contact, prior to March 22, 1999, Teri Stumpf, Room 1203, Vermont Avenue, NW, Washington, DC 20571, Voice: (202) 565–3502 or TDD (202) 565–3377.

FOR FURTHER INFORMATION CONTACT: Teri Stumpf, Room 1203, 811 Vermont Ave., NW, Washington, DC 20571, (202) 565–3502.

Kenneth Hansen,

General Counsel.

[FR Doc. 99–5585 Filed 3–5–99; 8:45 am]

BILLING CODE 6690–01–M

FEDERAL MARITIME COMMISSION

Notice of Agreement(s) Filed

The Commission hereby gives notice of the filing of the following agreement(s) under the Shipping Act of 1984.

Interested parties can review or obtain copies of agreements at the Washington, DC offices of the Commission, 800 North Capitol Street, N.W., Room 962. Interested parties may submit comments on an agreement to the Secretary, Federal Maritime Commission, Washington, DC 20573, within 10 days of the date this notice appears in the **Federal Register.**

Agreement No.: 202–011375–046

Title: TransAtlantic Conference Agreement

Parties:

A.P. Moller-Maersk Line
Atlantic Container Line AB
Hapag-Lloyd Container Linie Gmbh
Mediterranean Shipping Co., S.A.
Nippon Yusen Kaisha
Orient Overseas Container Line (UK) Inc.
P&O Nedlloyd B.V.
P&O Nedlloyd Limited
POL-Atlantic
Sea-Land Service, Inc.

Synposis: The proposed modification changes the parties' participation in a program to facilitate the interchange of empty containers and to report imbalances of empty containers for various European locations from mandatory to voluntary by twice substituting the word ''may'' for ''will'' in Annex B, Section 9(c) of the agreement.

Agreement No.: 224–201070

Title: Vancouver—MTC Management Agreement

Parties:

Port of Vancouver, USA Marine Terminals Corporation

Synopsis: The agreement is a management agreement providing for the operation of certain port property by MTC. The agreement runs through December 31, 2003, but may be extended under certain conditions.

By Order of the Federal Maritime Commission.

Dated: March 3, 1999.

Bryant L. VanBrakle,

Secretary.

[FR Doc. 99–5566 Filed 3–5–99; 8:45 am]

BILLING CODE 6730–01–M

FEDERAL MARITIME COMMISSION

Ocean Freight Forwarder License Applicants

Notice is hereby given that the following applicants have filed with the Federal Maritime Commission applications for licenses as ocean freight forwarders pursuant to section 19 of the Shipping Act of 1984 (46 U.S.C. app. 1718 and 46 CFR 510).

Persons knowing of any reason why any of the following applicants should not receive a license are requested to contact the Office of Freight Forwarders, Federal Maritime Commission, Washington, D.C. 20573.

Cornerstone Logistics Incorporated, 501 S. Airport Blvd., Suite 2, So. San Francisco, CA 94080, Officer: Seok Min Aum, President

Dated: March 3, 1999.

Bryant L. VanBrakle,

Secretary.

[FR Doc. 99–5565 Filed 3–5–99; 8:45 am]

BILLING CODE 6730–01–M

FEDERAL RESERVE SYSTEM

Change in Bank Control Notices; Acquisitions of Shares of Banks or Bank Holding Companies

The notificants listed below have applied under the Change in Bank Control Act (12 U.S.C. 1817(j)) and § 225.41 of the Board's Regulation Y (12 CFR 225.41) to acquire a bank or bank holding company. The factors that are considered in acting on the notices are set forth in paragraph 7 of the Act (12 U.S.C. 1817(j)(7)).

The notices are available for immediate inspection at the Federal Reserve Bank indicated. The notices also will be available for inspection at the offices of the Board of Governors. Interested persons may express their views in writing to the Reserve Bank indicated for that notice or to the offices of the Board of Governors. Comments must be received not later than March 22, 1999.

A. Federal Reserve Bank of Chicago (Philip Jackson, Applications Officer) 230 South LaSalle Street, Chicago, Illinois 60690-1413:

1. Florence Adele Peterson, Winfield, Iowa; to acquire additional voting shares of Peoples Holding Corporation, Winfield, Iowa, and thereby indirectly acquire additional voting shares of Peoples State Bank, Winfield, Iowa.

B. Federal Reserve Bank of Dallas (W. Arthur Tribble, Vice President) 2200 North Pearl Street, Dallas, Texas 75201-2272:

1. Dudley Nolan Althaus, Fredericksburg, Texas; to acquire additional voting shares of Pioneer Bancshares, Inc., Fredericksburg, Texas, and thereby indirectly acquire additional voting shares of Pioneer National Bank, Fredericksburg, Texas.

Board of Governors of the Federal Reserve System, March 2, 1999.

Robert deV. Frierson,

Associate Secretary of the Board.

[FR Doc. 99–5529 Filed 3–5–99; 8:45 am]

BILLING CODE 6210–01–F

FEDERAL RESERVE SYSTEM

Formations of, Acquisitions by, and Mergers of Bank Holding Companies

The companies listed in this notice have applied to the Board for approval, pursuant to the Bank Holding Company Act of 1956 (12 U.S.C. 1841 *et seq.*) (BHC Act), Regulation Y (12 CFR Part 225), and all other applicable statutes and regulations to become a bank holding company and/or to acquire the assets or the ownership of, control of, or the power to vote shares of a bank or bank holding company and all of the banks and nonbanking companies owned by the bank holding company, including the companies listed below.

The applications listed below, as well as other related filings required by the Board, are available for immediate inspection at the Federal Reserve Bank indicated. The application also will be available for inspection at the offices of the Board of Governors. Interested persons may express their views in writing on the standards enumerated in the BHC Act (12 U.S.C. 1842(c)). If the proposal also involves the acquisition of a nonbanking company, the review also includes whether the acquisition of the nonbanking company complies with the standards in section 4 of the BHC Act. Unless otherwise noted, nonbanking activities will be conducted throughout the United States.

Unless otherwise noted, comments regarding each of these applications must be received at the Reserve Bank indicated or the offices of the Board of Governors not later than April 1, 1999.

A. Federal Reserve Bank of Atlanta (Lois Berthaume, Vice President) 104 Marietta Street, N.W., Atlanta, Georgia 30303-2713:

1. Suncoast Bancorp, Inc., Sarasota, Florida; to become a bank holding company by acquiring 100 percent of the voting shares of Suncoast National Bank, Sarasota, Florida (in organization).

B. Federal Reserve Bank of St. Louis (Randall C. Sumner, Vice President) 411 Locust Street, St. Louis, Missouri 63102-2034:

1. M.R. Melton Limited Partnership, Mt. Sterling, Kentucky; to become a bank holding company by acquiring at least 16.41 percent of the voting shares of Morgantown Deposit Bancorp, Inc., Morgantown, Kentucky, and thereby indirectly acquire Morgantown Bank and Trust Company, Morgantown, Kentucky.

In connection with this application, Melton and Wirth Inc., Mt. Sterling, Kentucky (as general partner), has also applied to become a bank holding company by acquiring 100 percent of the voting shares of M.R. Melton Limited Partnership, Mt. Sterling, Kentucky, and thereby indirectly acquire Morgantown Deposit Bancorp, Inc., Morgantown, Kentucky, and Morgantown Bank and Trust Company, Morgantown, Kentucky.

Board of Governors of the Federal Reserve System, March 2, 1999.

Robert deV. Frierson,

Associate Secretary of the Board.

[FR Doc. 99–5530 Filed 3–5–99; 8:45 am]

BILLING CODE 6210–01–F

DEPARTMENT OF HEALTH AND HUMAN SERVICES

Office of the Secretary

Meeting of the Secretary's Council on National Health Promotion and Disease Prevention Objectives for 2010

AGENCY: Office of Public Health and Science, Office of Disease Prevention and Health Promotion, DHHS.

ACTION: Notice of third meeting.

SUMMARY: The Department of Health and Human Services (HHS) is providing notice that the Secretary's Council on National Health Promotion and Disease Prevention Objectives for 2010 will hold its third annual meeting, as mandated by its charter. Council members are charged with advising the Secretary on the Development of objectives for the Healthy People 2010 initiative. In this meeting they have responsibility for reviewing the draft objectives and other documents. The 2010 initiative is to be released to the public in January 2000.

DATES: The Council will hold its next meeting on April 23, 1999 from 9:00 a.m. to approximately 4:00 p.m. E.D.T.

ADDRESSES: Department of Health and Human Services, Sixth floor conference room, Hubert H. Humphrey Building, 200 Independence Avenue, SW., Washington, DC 20201. The meeting is open to the public; seating is limited.

FOR FURTHER INFORMATION CONTACT: Ellis Davis, Office of Disease Prevention and Health Promotion, Room 738G, Hubert H. Humphrey Building, 200 Independence Avenue, SW., Washington, DC 20201, (202) 260–2873. The electronic mail address is: edavis@osophs.dhhs.gov

SUPPLEMENTARY INFORMATION: The Council was establish by charter on September 5, 1996 to provide assistance to the Secretary and the Department of Health and Human Services in the development of health promotion and disease prevention objectives to enhance the health of Americans by 2010. The charter was renewed on September 4, 1998. The Council meets approximately once a year and will terminate on September 5, 2000.

The Council is charged to advise the Secretary on the development of national health promotion and disease prevention goals and objectives and to provide links with States, communities, and the private sector to ensure their involvement in the process of development these goals and objectives. The Secretary of Health and Human Services chairs the Council, with the Assistant Secretary for Health as Vice Chair. Other members include the Operating Division Heads of the Department and the former Assistant Secretaries for Health. Management and support services are provided by the Office of Disease Prevention and Health Promotion, Office of Public Health and Science, Office of the Secretary.

During its tenure, the Council has overseen the development of Healthy People 2010, the third generation of a national initiative to prevent disease and promote the health of the American people. At its third meeting, the membership will review the framework and objectives for 2010 as revised by Department agencies after consideration of comments received from the public during a 3-months' period that ended on December 15, 1998. The Council will also discuss other documents that will accompany the compilation of objectives, including a policy guide, a statistical review, and options for a set of leading health indicators. The discussions will conclude with the members' review of plans for a 3-day event in late January 2000 to introduce the 2010 initiative to the public.

If time permits at the conclusion of the formal agenda of the Council, the Chair may allow brief oral statements of no more than three minutes in length from interested parties and persons in attendance. The meeting is open to the public; however, seating is limited. Because of strict security in the Humphrey Building, members of the public who do not have a Federal government identification card should call Ms. Phyllis Carroll (202–205–8611) when they arrive in the building lobby to arrange for an escort to the meeting. If you will require a sign language interpreter, please call Ms. Carroll by 4:30 p.m. E.D.T. on April 9, 1999 to inform her of this need.

Dated: February 26, 1999.

Linda D. Meyers,

Acting Director, Office of Disease Prevention and Health Promotion.

[FR Doc. 99–5533 Filed 3–5–99; 8:45 am]

BILLING CODE 4160–17–M

DEPARTMENT OF HEALTH AND HUMAN SERVICES

Agency for Health Care Policy and Research

General Reorganization; Statement of Organization, Functions, and Delegations of Authority

Part E, Chapter E (Agency for Health Care Policy and Research), of the Statement of Organization, Functions, and Delegations of Authority for the Department of Health and Human Services (61 FR 15955–58, April 10, 1996, most recently amended at 63 FR 36698, July 7, 1998) is further amended to reflect organizational changes within the Agency for Health Care Policy and Research (AHCPR). The principal organizational and functional changes requiring this notice of amendment involve:

A. Abolishing the Office of Policy Analysis, to eliminate the overlap of functions between that office and other AHCPR offices; and

B. Establishing a third-echelon organizational substructure to facilitate day-to-day management and utilization of Agency resources (including human, fiscal, and material resources), to streamline and improve administrative operations, and to enhance shared decision-making and communications throughout the Agency.

Other minor changes have been made consistent with this reorganization.

Under *Section E–10, Organization,* delete *C. Office of Policy Analysis,* and reorder D. through K. as new C. through J.

Under *Section E–20, Functions,* delete the title and statement for the *Office of Policy Analysis (EAC).*

Within the statement for the *Immediate Office of the Administrator (EA),* following (6), delete ''; and '', and following (7), delete the period and insert ''; and (8) coordinates the legislative activities of the Agency, including the development of legislative proposals and analysis of health legislative initiatives, the review and clearance of Department and other Federal policies and regulations, and reports to Congress.''

Following the statement for the *Office of Management (EAA),* insert the following:

Division of Administrative Services (EAA2). Provides administrative support services. Specifically: (1) processes small purchase requests and manages the credit card program for small purchases; (2) manages the assignment and renovation of office space; (3) manages the common conference areas, copy centers, supply rooms, and mail services; (4) develops and administers safety and security programs; (5) manages the automated travel management system and provides travel guidance and advice; and (6) acquires and manages real property for the Agency.

Division of Contracts Management (EAA3). Provides for the solicitation, negotiation, award and management of negotiated contracts. Specifically: (1) solicits, negotiates, and awards negotiated contracts and provides for their post-award administration; (2) develops and manages a contract program to benefit small and disadvantaged businesses; (3) develops, implements, and maintains policies and procedures for the management of negotiated contracts; (4) provides guidance, assistance, and training for project officers on their duties and responsibilities; (5) manages the Intra/InterAgency Agreement program; and (6) develops and maintains a contract and intra/interagency information system.

Division of Financial Management (EAA4). Provides services and guidance in all aspects of financial management including Agency budget formulation and execution. Specifically: (1) formulates the Agency budget, serves as the focal point of its defense and appeal and provides ongoing coordination between the budget formulation and program planning process; (2) develops, analyzes, and monitors Agency appropriation activities; (3) establishes and maintains financial accounting and reporting systems; (4) coordinates responses to and maintains liaison on budget and accounting matters with all levels of Agency management, Department fiscal offices, Congressional committees, and the private sector; and (5) provides administrative support for Office/Center and Agency-wide operational spending.

Division of Grants Management (EAA5). Provides for the negotiation, award and administrative management of grants and cooperative agreements. Specifically: (1) negotiates and awards grants/cooperative agreements and provides for their post-award business and administrative management; (2) develops, implements, and maintains policies and procedures for the management of the Agency's grant/cooperative agreement program; (3) provides guidance, assistance, and training for project officers on their duties and responsibilities; (4) assists grantee institutions in the interpretation and application of grant/cooperative agreement policies and regulations; and (5) provides for the review of grant/

cooperative agreement expenditures and resolution of problematic audit findings.

Division of Human Resource Management (EAA6). Provides services and guidance in all matters regarding human resource and organization management. Specifically: (1) administers personnel management and operations authorities, including recruitment and placement, position classification, compensation and pay, payroll liaison, performance management, employee development and training, and employee relations; (2) establishes, implements and evaluates human resource management programs; (3) provides advice and assistance to managers and employees in exercising their personnel management rights and responsibilities; (4) issues and maintains Agency-wide administrative and operational policies and procedures and delegations of authority; and (5) recommends and performs organizational and management analyses to improve and streamline operations and implements approved organizational changes.

Division of Information Technology Management (EAA7). Provides for and manages the information technology (IT) infrastructure for the Agency. Specifically (1) administers and maintains an Agency-wide Local Area Network and a Wide Area Network; (2) develops and maintains Agency-wide management information systems and data bases; (3) develops and supports Agency Intranet and Extranet sites; (4) develops and oversees IT security and policy; (5) provides IT software and hardware support to staff; and (6) manages Agency telecommunications.

Following the statement for the *Office of Health Care Information (EAF),* insert the following:

Division of Print and Electronic Publishing (EAF2). Responsible for disseminating AHCPR's many and varied informational products. Ensures that findings and information from research conducted or funded by AHCPR are created in forms useful to intended recipients. Specifically: (1) produces information products in a variety of print and electronic formats that are scientifically sound and appropriately targeted to various audiences; (2) edits and controls the review and publication of all AHCPR documents; (3) ensures proper clearance procedures consistent with Departmental rules; (4) provides interfaces with the Government Printing Office and National Technical Information Service; (5) organizes and conducts AHCPR's exhibits program and provides conference support services to program staff; (6) provides and coordinates graphics, printing and visual aids production for AHCPR; (7) analyzes AHCPR audiences and information needs, and recommends information products that meet AHCPR's scientific information and dissemination goals; and (8) works with and assists the National Library of Medicine in efforts to improve the availability of health services information to the public.

Division of Public Affairs (EAF3). Responsible for planning and carrying out the public affairs activities of the Agency. Specifically: (1) handles AHCPR media relations; (2) develops health care research information dissemination partnerships with other Federal agencies, provider groups, the continuing education and continuing medical education communities, and the private sector; (3) ensures that findings and information from research conducted or funded by AHCPR are made promptly available to the public and private sectors; (4) analyzes AHCPR audiences and information needs and recommends new outreach/dissemination programs and information products to meet AHCPR's scientific information and dissemination goals and needs of AHCPR target audiences; (5) recommends the most effective and efficient approaches to information dissemination; (6) develops and evaluates the effectiveness of Agency dissemination strategies; (7) manages AHCPR's publication clearinghouse; (8) responds to public inquiries about AHCPR and its research; (9) makes final reports of Agency-supported research available to the public through the National Technical Information Service; and (10) carries out AHCPR's Freedom of Information Act activities.

Division of Research Synthesis and Translation (EAF4). Responds to internal and external needs for information by providing or facilitating analytic syntheses of existing research findings, data and activities, particularly in research areas to which AHCPR has made substantial contributions. Specifically: (1) coordinates and supports development of speeches and other presentations made by the AHCPR Administrator; (2) provides informal syntheses and examples of Agency research and activities in particular areas for a variety of uses (for example, briefings, budget and planning documents, correspondence, requests from Agency staff for information); (3) drafts articles, briefing sheets, and other analytic documents that synthesize and analyze particular topics and issues in health services research or pertaining to agency activities; (4) coordinates and supports ongoing improvement and maintenance of the Agency's research database system; and (5) conducts other activities that improve information sharing within the Agency and facilitates the ability of analysts across the Agency to compile, synthesize, and analyze health services research.

Division of User Liaison (EAF5). Provides direction and coordination of the Agency's program to define the issues, problems, and information needs of selected users of health services research, especially public and private sector policymakers, and to disseminate to them relevant research findings, program data, and descriptive information related to the organization, planning, management, financing, delivery, evaluation, and outcomes of health services at the Federal, state, and local level. Specifically: (1) develops syntheses of research findings focused on particular issues dealing with policy concerns and operational problems; (2) plans and conducts workshops and seminars to provide research findings and related information to policymakers and other consumers of health services research to allow them to make better informed health care policy decisions; (3) maintains liaison with State and local government organizations, public policy organizations, and with the research community and receives and appropriately transmits information which may impact the Agency's research plan and priority setting process; (4) formulates; in collaboration with Agency staff, appropriate policies and activities to develop effective linkages with potential users of health services research (3) communicates information regarding user research needs to the Agency Administrator and appropriate Agency staff to ensure user needs are adequately addressed in current and planned Agency project; (6) develops and implements mechanisms to identify and contact potential users of research findings and related information; (7) plans meetings and coordinates contacts between Agency staff and individual users and representatives of user's groups and organizations; (8) provides assistance and advice to other Federal agencies and organization in evaluating the utility of Federally-sponsored research to State and local government officials; and (9) provides technical assistance for the design and implementation of research projects undertaken by State and local governments.

Following the statement for the *Office of Research Review, Education, and Policy (EAE),* insert the following:

Division of Research Education (EAE2). Develops, implements, and

evaluates a comprehensive extramural health services research education program which supports the career development of predoctoral and postdoctoral students. Specifically: (1) Manages the AHCPR research education/training portfolio, which includes National Research Service Award (NRSA) institutional training grants, NRSA individual postdoctoral training grants, dissertation training grants, and incentive innovation awards; (2) establishes systems/mechanisms to monitor the external health care environment for research needs of potential private and public sector employers and to anticipate special training needs; (3) implements new programs and support mechanisms, and modifies existing ones to meet changing needs; (4) develops and manages activities intended to evaluate the effects of past investments in health services research training by examining career patterns, publication records, and research productivity of persons supported by AHCPR; (5) promotes visibility for the field of health services research and the availability of training support through a variety of mechanisms; (6) keep abreast of Departmental policies and procedures which pertain to extramural research education training, and assures compliance at the AHCPR level; and (7) works with AHCPR leadership to assure communication and collaboration between OREP and program centers with an interest in research education.

Division of Research Policy, Coordination, and Analysis (EAE3). Serves as the focal point within AHCPR for developing, coordinating, and communicating policies, procedures, and priorities for non-financial aspects of AHCPR's extramural research program. Specifically: (1) Coordinates the review and clearance of public announcements pertaining to grant opportunities and other extramural research interests for publication in the **Federal Register** and/or the NIH Guide for Grants and Contracts: (2) coordinates legal clearance of notices, announcements, and other policy documents and positions with the Office of General Counsel; (3) serves as liaison with the National Institutes of Health on referral of research applications and represents AHCPR on committees and workgroups coordinating referral issues; (4) provides locus for AHCPR grants referral activities by assigning research applications to appropriate AHCPR program centers, and developing criteria for grants referral in cooperation with program centers; (5) coordinates AHCPR intramural and extramural functions pertaining to ethics in research, including the development of policies and seminars, as appropriate; (6) coordinates the activities of the Extramural Research Committee (ERC) which provides policy recommendations to the Agency on a variety of research and operational issues; (7) supports AHCPR program staff and the health care research community by providing guidance on issues and questions dealing with the Agency's extramural grants policies, other than on business and fiscal matters, particularly the inclusion of women, minorities, and children in research; (8) integrates and develops management information systems to track and report on AHCPR scientific review activities; (9) assures uniform implementation of AHCPR grants streamlining activities; and (10) supports the AHCPR committee management function.

Division of Scientific Review (EAE4). Plans and carries out the scientific review for all AHCPR extramural research grants and SBIR proposals. Specifically: (1) Assures compliance with organizational, regulatory, and policy aspects of peer review; (2) determines review requirements for standing study sections and special emphasis panels; (3) anticipates needs/changes regarding the charters of standing study sections, establishes and implements procedures for chartering study sections, filling study section vacancies and appointing new members and chairpersons, orients new reviewers to peer review processes; (4) advises Agency staff on peer review processes and grant solicitations; (5) keeps abreast of departmental, especially NIH, policies and procedures regarding peer review to assure compatibility of AHCPR processes; (6) interacts with the health services research community and keeps abreast of emergent research developments as they relate to review planning; (7) establishes and maintains continuous quality monitoring and improvement activities; and (8) coordinates funding meetings and relevant follow-up activities.

Following the statement for the *Center for Cost and Financing Studies (EC), insert the following:*

Division of Modeling and Simulation (EC2). Provides research, models, and data bases to support microsimulation analyses of household impacts and trends in health expenditures from health policies embodied in current law and from health care policies embodied in generic versions of proposed health care reforms. Specifically: (1) Projects the National Medical Expenditures Survey and the Medical Expenditure Panel Survey household expenditure data to future years; (2) aligns the projected household expenditure data to the Health Care Financing Administration's National Health Expenditures by type of health service and payment source; (3) uses a variety of outside data sources to project, for example, the household population, Medicaid enrollees, household income, and private and public health insurance benefits; (4) develops and updates the Agency's MEDSIM microsimulation model's software to estimate current household income and payroll taxes, current private and public insurance coverage and benefits, and the costs and consequences of generic versions of proposed health care reforms; (5) provides the latest versions of the projected expenditures data bases and associated research products on the Agency home page; (6) uses MEDSIM and its data bases to conduct and publish research on current and proposed health policies and on trends in household health care expenditures; and (7) provides cost and distributional MEDSIM estimates of specific legislative health care reform proposals to provide predecisional guidance to requesting federal officials.

Division of Social and Economic Research (EC3). Provides basic descriptive and behavioral analyses of the population's access to, use of, expenditures and sources of payment for health care; the availability and costs of private health insurance in the employment-related and non-group markets; the population enrolled in public health insurance coverage and those without health care coverage; and the role of health status in health care use, expenditures, and household decision-making, and in health insurance and employment choices. Specifically: (1) Provides analytical input to the design and development of primary data collection efforts and research-related data bases; (2) develops a research agenda related to health care use, expenditures, access to care, sources of payment, health insurance, and health status; (3) conducts applied research in these areas by applying substantive research tools from the fields of health services research, health economics, medical sociology, public policy analysis, demography, statistics and econometrics; (4) disseminates research findings through presentations at conferences, publications in peer reviewer journals, book chapters, and conference volumes; (5) provides substantive technical expertise on health care use, expenditures, and

insurance coverage to other units within AHCPR, other governmental units, private sector research institutions, and by serving as technical reviewers and advisors to scholarly journals, technical advisory committees, and private and public sector task forces.

Division of Statistical Research and Methods (EC4). Plans and conducts studies on statistical methods and the use of statistics in survey design in health services research. These studies provide the bases for policy research and analysis and for technical assistance provided to other Centers and Offices within the Agency. Specifically: (1) Identifies, designs, conducts, and implements statistical research and evaluation studies in accordance with the research priorities of the Center for Cost and Financing Studies; (2) oversees the statistical design of the National Medical Expenditure Panel Survey (MEPS); and (3) conducts research in the areas of survey design, sampling, estimation, imputation, the analysis of complex survey data, and the reduction of sources of sampling and nonsampling errors in the design of national health care surveys.

Division of Survey Operations (EC5). Plans, implements and monitors the fielding of CCFS surveys. Specifically: (1) Develops and disseminates public use data files which include editing, imputation and estimation tasks; (2) assists in the development of data reports which are of particular interest to the Public Health Service, DHHS, and other Federal, State and local government agencies as well as the larger research community; and (3) monitors the development of Computer Assisted Personal Interviewing (CAPI) data collection instruments.

Under *Section E–30. Order of Succession,* delete (3), (4), and (5).

All delegations and redelegations of authority to officers and employees of the Agency for Health Care Policy and Research which were in effect immediately prior to the effective date of this reorganization shall continue in effect pending further redelegation, provided they are consistent with this reorganization.

These changes are effective upon date of signature.

Dated: February 23, 1999.

John M. Eisenberg,

Administrator.

[FR Doc. 99–5539 Filed 3–5–99; 8:45 am]

BILLING CODE 4160–90–M

DEPARTMENT OF HEALTH AND HUMAN SERVICES

National Institutes of Health

National Institute of Diabetes and Digestive and Kidney Diseases; Notice of Closed Meetings

Pursuant to section 10(d) of the Federal Advisory Committee Act, as amended (5 U.S.C. Appendix 2), notice is hereby given of the following meetings.

The meetings will be closed to the public in accordance with the provisions set forth in sections 552b(c)(4) and 552b(c)(6), Title 5 U.S.C., as amended. The grant applications and the discussions could disclose confidential trade secrets or commercial property such as patentable material, and personal information concerning individuals associated with the grant applications, the disclosure of which would constitute a clearly unwarranted invasion of personal privacy.

Name of Committee: National Institute of Diabetes and Digestive and Kidney Diseases Special Emphasis Panel, ZDK1 GRB–6 (M1).

Date: March 24–25, 1999.

Time: March 24, 1999, 7:45 am to adjournment.

Agenda: To review and evaluate grant applications.

Place: Ramada Inn Rockville, 1775 Rockville Pike, Rockville, MD 20852.

Contact Person: Neal A. Musto, Scientific Review Administrator, Review Branch, DEA, NIDDK, Natcher Building, Room 6AS–37A, National Institutes of Health, Bethesda, MD 20892–6600, (301) 594–7798.

Name of Committee: National Institute of Diabetes and Digestive and Kidney Diseases Special Emphasis Panel, ZDK1 GRB–7(M3).

Date: March 31, 1999.

Time: 3:00 pm to Adjournment.

Agenda: To review and evaluate grant applications.

Place: Natcher Building 45, Room 6AS 25F, 9000 Rockville Pike, Bethesda, MD 20892, (Telephone Conference Call).

Contact Person: Lakshmanan Sankaran, Scientific Review Administrator, Review Branch, DEA, NIDDK, Natcher Building, Room 6AS–37, National Institutes of Health, Bethesda, MD 20892–6600, (301) 594–7799.

(Catalogue of Federal Domestic Assistance Program Nos. 93.847, Diabetes, Endocrinology and Metabolic Research; 93.848, Digestive Diseases and Nutrition Research; 93.849, Kidney Diseases, Urology and Hematology Research, National Institute of Health, HHS).

Dated: March 2, 1999.

LaVerne Y. Stringfield,

Committee Management Officer, NIH.

[FR Doc. 99–5659 Filed 3–5–99; 8:45 am]

BILLING CODE 4410–01–M

DEPARTMENT OF HEALTH AND HUMAN SERVICES

Administration for Children and Families

Privacy Act of 1974; Amended System of Records

AGENCY: Office of Child Support Enforcement (OCSE), ACF, DHHS.

ACTION: Notice.

SUMMARY: In accordance with the requirements of the Privacy Act of 1974 (5 U.S.C. 552a), the Office of Child Support Enforcement (OCSE) is publishing notice of its amendment of its systems of records entitled ''The Federal Parent Locator and Federal Tax Refund/Administrative Offset System'', DHHS/OCSE No. 09–90–0074.

DATES: HHS invites interested parties to submit comments on the proposed notice within April 7, 1999. As required by the Privacy Act (5 U.S.C. 552a(r)), on March 2, 1999 HHS sent a report of an Amended System to the Committee on Government Reform and Oversight of the House of Representatives, the Committee on Governmental Affairs of the Senate, and the Office of Management and Budget. The amendments described in this notice are effective upon publication unless HHS receives comments that would result in a contrary determination.

ADDRESSES: Please address comments to Donna Bonar, Director, Division of Program Operations, Office of Child Support Enforcement, Administration for Children and Families, 370 L'Enfant Promenade, SW, 4th Floor East, Washington, DC 20447, (202) 401–9271.

Comments received will be available for inspection at the address specified above from 9 a.m. to 5 p.m., Monday through Friday.

FOR FURTHER INFORMATION CONTACT: Donna Bonar, Director, Division of Program Operations, Office of Child Support Enforcement, Administration for Children and Families, 370 L'Enfant Promenade, SW, 4th Floor East, Washington, DC 20447, (202) 401–9271.

SUPPLEMENTARY INFORMATION: Notice is hereby given that the Office of Child Support Enforcement (OCSE) is amending one of its Systems of Records, ''The Federal Parent Locator and Federal Tax Refund/Administrative Offset System'', DHHS/OCSE No. 09–90–0074, last published at 61 FR 51663 on October 2, 1997.

OCSE wishes to advise the public that OCSE is changing the name of this system to ''Location and Collection System'' (LCS). In addition, OCSE will no longer refer to subsystems of the LCS

as the ''Parent Locator Service'' and ''Tax Refund/Administrative Offset'' subsystems. OCSE also wishes to advise the public that the LCS is being further expanded. First, consistent with sections 452(l) and 466(a)(17)(A)(i) of the Social Security Act (the Act) as amended by Pub. L. 105–200, it will be used to aid State Child Support Enforcement Agencies in obtaining information from multistate financial institutions. Second, in accordance with section 453A(b)(1)(B) of the Act, multistate employer information will be included in the portion of the LCS which constitutes the National Directory of New Hires (NDNH). In addition, several aspects of the retention and disposal procedures for records in the LCS are being modified. Pursuant to section 453(i)(2)(B) of the Act, 42 U.S.C. 653(i)(2)(B), quarterly wage and unemployment compensation in the NDNH will generally be used for child support enforcement purposes for only 12 months after the date the information has been provided in circumstances where no match has resulted as a result of any information comparisons. Moreover, any new hire, quarterly wage and unemployment compensation data will generally be retained for only 24 months after the date of entry, after which time NDNH data will be deleted. However, the 12- or 24-month limits will not apply to NDNH data samples whose retention and use the Secretary finds necessary to assist in the carrying out of research authorized under section 453(j)(5) of the Act. Finally, we have clarified our description of the categories of individuals included in the system to indicate that records are maintained for uses pertinent to individuals who have or may have parental rights with respect to a child and to indicate that the records maintained may pertain to assets of or debts owed to or by individuals. We have also made other adjustments to this Notice for clarification purposes.

The complete system notice is republished below.

Dated: February 19, 1999.

Paul Legler,

Acting Commissioner, Office of Child Support Enforcement.

09–90–0074

SYSTEM NAME:

Location and Collection System (LCS), HHS, OCSE.

SECURITY CLASSIFICATION:

None.

SYSTEM LOCATION:

Office of Child Support Enforcement, 370 L'Enfant Promenade, SW, 4th Floor East, Washington, DC 20447;

Social Security Administration, 6200 Security Boulevard, Baltimore, Maryland 21235.

CATEGORIES OF INDIVIDUALS COVERED BY THE SYSTEM:

Records will be maintained to locate individuals for the purpose of establishing parentage, establishing, setting the amount of, modifying, or enforcing child support obligations, or enforcing child custody or visitation orders and may include (1) Information on, or facilitating the discovery of, or the location of any individuals: (A) Who are under an obligation to pay child support or provide child custody or visitation rights; (B) against whom such an obligation is sought; (C) to whom such an obligation is owed including the individual's social security number (or numbers), most recent address, and the name, address, and employer identification number of the individual's employer; and (D) who have or may have parental rights with respect to a child (2) Information on the individual's wages (or other income) from, and benefits of, employment (including rights to enrollment in group health care coverage); (3) Information on the type, status, and amount of any assets or debts owed to or by such an individual; and (4) Information on certain Federal disbursements payable to a delinquent obligor which may be offset for the purpose of collecting past-due child support.

CATEGORIES OF RECORDS IN THE SYSTEM:

The LCS record system will consist of records that contain the name of a noncustodial or custodial parent or child, Social Security number (when available), date of birth, place of birth, sex code, State case identification number, local identification number (State use only), State or locality originating request, date of origination, type of case (TANF, non-TANF full-service, non-TANF locate only, parental kidnapping), home address, mailing addresses, type of employment, work location, annual salary, pay rate, quarterly wages, medical coverage, benefit amounts, type of military service (Army, Navy, Marines, Air Force, not in service), retired military (yes or no), Federal employees (yes or no), recent employer's address, known alias (last name only), offset amounts, date requests sent to Federal agencies or departments (SSA, Treasury, DoD/OPM, VA, USPS, FBI, and SESAs), dates of Federal agencies' or departments' responses, date of a death, record identifier, an employee date of hire, employee State of hire, Federal EIN, State EIN, employer name, employer address, employer foreign address, employer optional address, and employer optional foreign address; multistate employer, name, address and EIN; employee SSN, employee name, employee wage amount, reporting period, claimant SSN, claimant name, claimant address, SSA/VA benefit amount, reporting period, State code, local code, case number, arrearage amount, collection amount, adjustment amount, return indicator, transfer State, street address, city and State, zip code, zip code 4, total debt, number of adjustments, number of collections, net amount, adjustment year, tax period for offset, type of offset, submitting State FIPS, locate code, case ID number, case type, and court/administrative order indicator. Records used to aid State Child Support Enforcement Agencies in obtaining information from multistate financial institutions may include institution name(s), name control, Taxpayer Identification Number(s), year, month, service bureau indicator, transfer agent indicator, foreign corporation indicator, reporting agent/transmitter, address(es), file indicator, record type, payee last name control, SSN(s), payee account number, account full legal title (optional), payee foreign country indicator (optional) payee names, addresses, account balances (optional), trust fund indicator, account balance indicator (optional), account update indicator, account type, date of birth.

AUTHORITY FOR MAINTENANCE OF THE SYSTEM:

Sections 452 and 453 of the Social Security Act require the Secretary of HHS to establish and conduct the Federal Parent Locator Service, a computerized national location network which provides address and SSN information to authorized persons, primarily for the purposes of establishing and collecting child support obligations.

PURPOSE(S):

The primary purpose of the system is to improve States' abilities to locate parents and collect child support.

ROUTINE USES OF RECORDS MAINTAINED IN THE SYSTEM, INCLUDING CATEGORIES OF USERS AND THE PURPOSE OF SUCH USES:

The routine uses of records maintained in the LCS are as follows: (1) Request the most recent home and employment addresses and SSN of the noncustodial or custodial parents from any State or Federal government

department, agency or instrumentality which might have such information in its records; (2) Provide the most recent home and employment addresses and SSN to State Child Support Enforcement (CSE) agencies under agreements covered by section 463 of the Social Security Act (42 U.S.C. 663) for the purpose of locating noncustodial parents or children in connection with activities by State courts and Federal attorneys and agents charged with making or enforcing child custody determinations or conducting investigations, enforcement proceedings or prosecutions concerning the unlawful taking or restraint of children; (3) Provide the most recent home and employment addresses and SSN to agents and attorneys of the United States, involved in activities in States which do not have agreements under section 463 of the Act for purposes of locating noncustodial parents or children in connection with Federal investigations, enforcement proceedings or prosecutions involving the unlawful taking or restraint of children; (4) Provide to the State Department the name and SSN of noncustodial parents in international child support cases, and in cases involving the Hague Convention on the Civil Aspects of International Child Abduction; (5) Provide to State agencies data in the NDNH portion of this system for the purpose of administering the Child Support Enforcement Program and the Temporary Assistance for Needy Families (TANF) program; (6) Provide to the Commissioner of Social Security information in the NDNH portion of this system for the purpose of verifying reported SSNs and other purposes; (7) Provide to the Secretary of the Treasury information in the NDNH portion of this system for purposes of administering advance payment of the earned income tax credit and verifying a claim with respect to employment in a tax return; (8) Provide to researchers new hire data for research efforts that would contribute to the TANF and CSE programs. Information disclosed may not contain personal identifiers; (9) Provide to State CSE agencies, or any agent of an agency that is under contract with the State CSE agency information which will assist in locating individuals for the purposes of establishing paternity and for establishing, modifying, and enforcing child support obligations; (10) Disclose to authorized persons as defined in section 453(c) of the Act (42 U.S.C. 653(c)) records for the purpose of locating individuals and enforcing child custody and visitation orders; (11) Disclose to the State agency administering the Medicaid, Unemployment Compensation, Food Stamp, SSI, and territorial cash assistance programs new hire information for income eligibility verification; (12) Disclose to State agencies administering unemployment and workers' compensation programs new hire information to assist in determining the allowability of claims; (13) Disclose information to the Treasury Department in order to collect past due child support obligations via offset of tax refunds and certain Federal payments such as: Federal salary, wage and retirement payments; vendor payments; expense reimbursement payments; and travel payments; (14) Disclose to the Secretary of State information necessary to revoke, restrict, or deny a passport to any person certified by State CSE agencies as owing a child support arrearage greater than $5,000; and (15) Disclose to States information pertaining to multistate financial institutions which has been provided by such institutions in order to aid State Child Support Enforcement Agencies.

DISCLOSURE TO CONSUMER REPORTING AGENCIES:

None.

POLICIES AND PRACTICES FOR STORING, RETRIEVING, ACCESSING, RETAINING, AND DISPOSING OF RECORDS IN THE SYSTEM:

STORAGE:

LCS records are maintained on disc and computer tape, and hard copy.

RETRIEVABILITY:

System records can be accessed by either a State assigned case identification number or Social Security Number.

SAFEGUARDS:

1. *Authorized Users:* All requests from the State IV–D Agency must certify that: (1) They are being made to locate noncustodial and custodial parents for the purpose of establishing paternity or securing child support, or in cases involving parental kidnapping or child custody and visitation determinations and for no other purpose; (2) the State IV–D agency has in effect protective measures to safeguard the personal information being transferred and received from the Federal Parent Locator Service; and (3) the State IV–D Agency will use or disclose this information for the purposes prescribed in 45 CFR 302.70.

2. *Physical Safeguards:* For computerized records electronically transmitted between Central Office and field office locations (including organizations administering HHS programs under contractual agreements), safeguards include a lock/unlock password system. All input documents will be inventoried and accounted for. All inputs and outputs will be stored in a locked receptacle in a locked room. All outputs will be labeled ''For Official Use Only'' and treated accordingly.

3. *Procedural and Technical Safeguards:* All Federal and State personnel and contractors, are required to take a nondisclosure oath. A password is required to access the terminal. All microfilm and paper files are accessible only by authorized personnel who have a need for the information in the performance of their official duties.

These practices are in compliance with the standards of Chapter 45–13 of the HHS General Administration Manual, ''Safeguarding Records Contained in Systems of Records,'' and the Department's Automated Information System Security Program Handbook.

RETENTION AND DISPOSAL:

Quarterly wage data and unemployment data supplied to the LCS which, within 12 months, has not produced a match as a result of any information comparison will not thereafter be used for child support enforcement purposes. Such quarterly wages and unemployment data and new hire information will ordinarily be retained for 24 months after the date of entry and then destroyed. Quarterly wage data and unemployment data which has produced a match as a result of an information comparison will be retained for 24 months. Sample data will be retained only long enough to complete research authorized under section 453(j)(5) of the Act.

Tax refund and administrative offset information will be maintained for six years in an active master file for purposes of collection and adjustment. After this time, records of cases for which there was no collection will be destroyed. Records of cases with a collection will be stored on-line in an inactive master file.

Records pertaining to passport denial will be updated and/or deleted as obligors meet satisfactory restitution or other State approved arrangements.

Records of information provided to authorized users will be maintained only long enough to communicate the information to the appropriate State or Federal agent. Thereafter, the information provided will be destroyed. However, records pertaining to the disclosures, which include information

provided by States, Federal agencies contacted, and an indication of the type(s) of information returned, will be stored on a history tape and in hard copy for five years and then destroyed.

Records of information provided by financial institutions for the purpose of facilitating matches will be maintained only long enough to communicate the information to the appropriate State agent. Thereafter, the information provided will be destroyed. However, records pertaining to the disclosures, which include information provided by States, Federal agencies contacted, and an indication of the type(s) of information returned, will be stored on a history tape and in hard copy for five years and then destroyed.

SYSTEM MANAGER(S) AND ADDRESS:

Director, Division of Program Operations, Office of Child Support Enforcement Administration for Children and Families, 370 L'Enfant Promenade, SW, 4th Floor East, Washington, DC 20447.

NOTIFICATION PROCEDURES:

To determine if a record exists, write to the System Manager at the address listed above. The request must indicate whether the information concerns the requestor or someone else. It must also be notarized and contain the individual's full name and address. Additional information, such as Social Security Number, date of birth or mother's maiden name, may be requested by the system manager in order to distinguish between individuals having the same or similar names.

RECORD ACCESS PROCEDURES:

Write to the System Manager specified above to attain access to records. Requesters should provide a detailed description of the records contents they are seeking.

CONTESTING RECORD PROCEDURE:

Contact the official at the address specified under system manager above, and identify the record and specify the information to be contested and corrective action sought with supporting justification to show how the record is inaccurate, incomplete, untimely or irrelevant.

RECORD SOURCE CATEGORIES:

Information is obtained from departments, agencies, or instrumentalities of the United States or any State and from multistate financial institutions.

EXEMPTIONS CLAIMED FOR THE SYSTEM:

None.

[FR Doc. 99–5584 Filed 3–5–99; 8:45 am]

BILLING CODE 4184–01–P

DEPARTMENT OF HEALTH AND HUMAN SERVICES

Food and Drug Administration

[Docket No. 98N–0453]

Agency Information Collection Activities; Announcement of OMB Approval; Medical Devices: Third-Party Review Program Under the U.S./EC MRA

AGENCY: Food and Drug Administration, HHS.

ACTION: Notice.

SUMMARY: The Food and Drug Administration (FDA) is announcing that a collection of information entitled ''Medical Devices: Third-Party Review Program Under the U.S./EC MRA'' has been approved by the Office of Management and Budget (OMB) under the Paperwork Reduction Act of 1995.

FOR FURTHER INFORMATION CONTACT: Peggy Schlosburg, Office of Information Resources Management (HFA–250), Food and Drug Administration, 5600 Fishers Lane, Rockville, MD 20857, 301–827–1223.

SUPPLEMENTARY INFORMATION: In the **Federal Register** of December 14, 1998 (63 FR 68773), the agency announced that the proposed information collection had been submitted to OMB for review and clearance under 44 U.S.C. 3507. An agency may not conduct or sponsor, and a person is not required to respond to, a collection of information unless it displays a currently valid OMB control number. OMB has now approved the information collection and has assigned OMB control number 0910–0378. The approval expires on February 28, 2002. A copy of the supporting statement for this information collection is available on the Internet at ''http://www.fda.gov/ohrms/dockets''.

Dated: March 1, 1999.

William K. Hubbard,

Acting Deputy Commissioner for Policy.

[FR Doc. 99–5518 Filed 3–5–99; 8:45 am]

BILLING CODE 4160–01–F

DEPARTMENT OF HEALTH AND HUMAN SERVICES

Food and Drug Administration

[Docket No. 98N–0645]

Medical Device Warning Letter Pilot

AGENCY: Food and Drug Administration, HHS.

ACTION: Notice.

SUMMARY: The Food and Drug Administration (FDA) is initiating a pilot program involving the medical device industry that is a continuation of the ''medical device industry initiatives.'' This pilot concerns the issuance of warning letters for quality system, premarket notification submission (510(k)), and labeling violations. This pilot is intended to optimize resource utilization, enhance communication between industry and FDA, and provide firms with incentives to promptly correct violations or deficiencies. The pilot includes eligibility criteria and procedures for the issuance of warning letters.

EFFECTIVE DATES: Initiation date March 29, 1999. Termination date September 8, 2000.

ADDRESSES: Submit written comments on the pilot to the Dockets Management Branch (HFA–305), Food and Drug Administration, 5630 Fishers Lane, rm. 1061, Rockville, MD 20852. Comments should be identified with the docket number found in brackets in the heading of this document. See the **SUPPLEMENTARY INFORMATION** section for electronic access to the pilot.

FOR FURTHER INFORMATION CONTACT:

Device quality system warning letter pilot: Jeffrey B. Governale, Division of Compliance Policy (HFC–230), Office of Regulatory Affairs, Food and Drug Administration, 5600 Fishers Lane, Rockville, MD 20857, 301–827–0411, FAX 301–827–0482.

Premarket notification (510(k)) and labeling warning letter pilot: Chester T. Reynolds, Office of Compliance (HFZ–300), Center for Devices and Radiological Health, Food and Drug Administration, 2098 Gaither Rd., Rockville, MD 20850, 301–594–4618, FAX 301–594–4610.

SUPPLEMENTARY INFORMATION:

I. Background

During FDA/medical device industry grassroots forums, several issues were discussed concerning FDA's interaction with the medical device industry. After considering these issues, the agency is initiating a pilot program that will last

for 18 months, and then be formally evaluated. The pilot includes procedures for the issuance of warning letters for quality system (21 CFR part 820), 510(k) (21 CFR part 807, subpart E) and labeling (e.g., 21 CFR part 800, subpart B; part 801, and part 809, subparts B and C) violations. This pilot is currently restricted to the medical device industry and is a continuation of the medical device industry initiatives.

The purpose of this pilot is to optimize resource utilization, enhance communication between the medical device industry and FDA, and provide firms with incentives to promptly correct violations or deficiencies. Implementation of this pilot will not impact on violative situations where enforcement action is necessary to protect the public health.

The agency has adopted good guidance practices (GGP's) that set forth the agency's policies and procedures for the development, issuance, and use of guidance documents (62 FR 8961, February 27, 1997). In the **Federal Register** of August 27, 1998 (63 FR 45821), FDA published a notice of availability of the draft pilot as a Level 1 guidance document consistent with GGP's. FDA received comments on the draft from a medical device trade association and three individual firms. FDA evaluated these comments and made revisions to the guidance as appropriate.

The medical device warning letter pilot is being issued as a guidance document and represents the agency's current thinking on the subject. It does not create or confer any rights for or on any person and does not operate to bind FDA or the public. An alternative approach may be used if such approach satisfies the applicable statute, regulations, or both. The pilot consists of two parts that are described below:

I. Device Quality System Warning Letter Pilot

Effective Dates: Initiation date March 29, 1999. Termination date September 8, 2000.

This pilot is restricted to the medical device industry and is a continuation of the medical device industry initiatives.

Following a domestic device quality system inspection which finds current good manufacturing practice (CGMP) deficiencies (situation 1, compliance program (CP) 7382.830–part V) that warrant a warning letter, the establishment is to be given 15 working days to respond from the issuance date of the list of inspectional observations (FDA–483). If the firm's written response to the FDA–483 is deemed to be satisfactory by the district office, then a warning letter should not be issued.

The device quality system warning letter pilot does not apply to:

1. Nonquality system inspections such as mammography, radiological health, and bioresearch inspections;
2. Establishments that manufacture devices as well as other FDA regulated products;
3. Establishments that manufacture devices that are regulated by the Center for Biologics Evaluation and Research (CBER);
4. Recidivous establishments as defined in CP 7382.830;
5. Any inspection that uncovers CGMP, premarket notification submission (510(k)), or labeling deficiencies that may cause serious adverse health consequences;[1]
6. A compliance followup inspection when the previous inspection resulted in a warning letter or regulatory action for quality system, 510(k), or labeling violations;
7. Any inspection that discloses other significant device violations (e.g. medical device reporting or premarket approval) in addition to quality system, 510(k), or labeling violations which warrant the issuance of a warning letter or regulatory action; or
8. A situation where the firm's management failed to make promptly available to FDA personnel all requested information and records required by regulations or laws enforced by FDA.

If the district is essentially satisfied with the written response to the FDA–483 but needs further clarification, it may seek additional information via untitled correspondence, meetings, or telephone.

If the firm fails to respond to the FDA–483, a warning letter should be sent to the establishment once the 15 working day period has expired.

If the district receives a response to the FDA–483 within 15 working days, the district has 15 working days from the receipt date to determine whether the response is satisfactory.

If it is necessary for the district to consult with the Center for Devices and Radiological Health's Office of Compliance for technical assistance, the latter office has 15 working days to respond to the district and then the district has 15 working days, following receipt of the Center's response, to respond to the establishment. In this situation, the agency should not exceed 30 working days from the receipt date of the written response to the FDA–483.

If the written response to the FDA–483 is determined to be unsatisfactory, the district should send a warning letter to the establishment.

When no warning letter is issued by the district office due to the firm's satisfactory written response, the postinspectional notification letter (see attachment 1 of this document) should be sent to the establishment. The inspection should be classified as voluntary action indicated (VAI) and the profile should be designated as acceptable.

When no warning letter is issued, following a satisfactory written response, and the next inspection discloses situation 1 CGMP deficiencies, then FDA personnel should proceed as if a warning letter had been issued for the previous inspection and consider appropriate enforcement action. (See the graphic for the device quality system warning letter pilot as attachment 2 and table 1 for attachment 3.)

This pilot will be evaluated by FDA at the end of the 18-month period.

Copies of all domestic warning letters that include a device CGMP adulteration charge (section 501(h) of the Federal Food, Drug, and Cosmetic Act (21 U.S.C. 351(h))) for inspections that are initiated between March 29, 1999, and September 8, 2000, should be forwarded by the districts to the Division of Compliance Management and Operations (DCMO)/Office of Enforcement (OE) (HFC–210) with a cover page. (See attachment 4 for a copy of this cover page.)

When warning letters are not issued for situation 1 CGMP deficiencies under this pilot, copies of the postinspectional notification letters issued for the inspections initiated between the above dates should be sent to Jeffrey B. Governale, Division of Compliance Policy (DCP)/OE (HFC–230) by the districts.

Any questions concerning this pilot should be directed to Jeffrey B. Governale via telephone (301–827–0411), facsimile (301–827–0482), or electronic mail (Jeffrey Governale@OE@FDAORAHQ).

Attachments, as stated:

Attachment 1—Model Postinspectional Notification Letter for Device Quality System Warning Letter Pilot

[Name and title of most responsible individual]

[Establishment's name and address]

Dear _____ :

The Food and Drug Administration (FDA) conducted an inspection of your firm's [description] facility at [address] on [date]. The inspection covered the following devices:

[list devices and their profile classes]

At the end of the inspection, the FDA investigator left a list of inspectional observations (FDA–483) at your firm. We have received your firm's written response, dated [date] to that FDA–483. Copies of this response and the FDA–483 are enclosed.

While this inspection found deficiencies of your quality system that would warrant a warning letter if not corrected, your written response has satisfied us that you either have taken or are taking appropriate corrective actions. At this time, FDA does not intend to take further action based on these inspectional findings. The agency is relying on your commitment regarding corrective actions and, should we later observe that the deviations from the quality system regulation have not been remedied, future regulatory action (e.g., seizure, injunction and civil penalties) may be taken without further notice.

Based upon your corrective action, the deficiencies noted during FDA's inspection will not affect applicable pending premarket submissions or export certificates for devices manufactured at your facility that were specifically inspected. This information is available to Federal agencies when they consider awarding contracts.

There may be other devices and operations of your firm for which the conclusions from

[1] ''Serious adverse health consequences'' are to have the same meaning as ''serious injury,'' which is defined in § 803.3(aa)(1) (21 CFR 803.3(aa)(1)).

this inspection are not applicable. The agency may separately inspect your firm's facilities to address the quality system regulation in these areas.

Your firm has an ongoing responsibility to conduct internal self-audits to assure you are continuing to maintain conformance with the quality system regulation.

For further information, please contact the following individual at this office:

[name and telephone number]

Sincerely,

District Director

_____ District Office

Enclosures

bcc:

HFC–230 (Governale)

[district office internal distribution]

BILLING CODE 4160–01–F

Attachment 2

Device Quality System Warning Letter Pilot

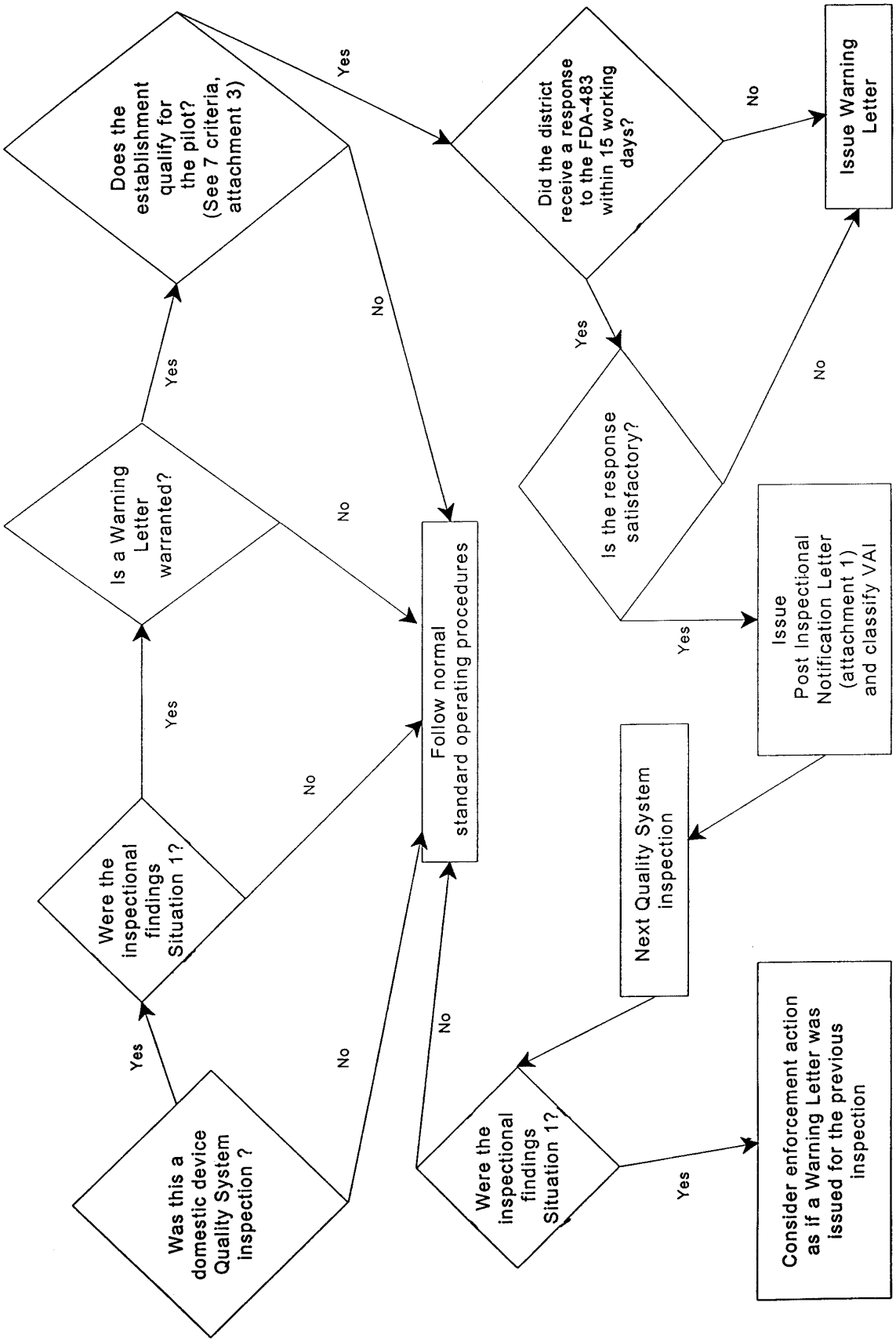

BILLING CODE 4160–01–C

Attachment 3—Device Quality System Warning Letter Pilot

Important: If one or more of your answers to any of the questions are different than those found in the answer column of Table 1, then this pilot does *not* apply to your situation. You should follow FDA's normal standard operating procedures instead.

TABLE 1

Number	Question	Answer
1	In addition to devices, does the establishment manufacture other FDA regulated products?	No
2	Does the establishment manufacture devices that are regulated by CBER?	No
3	Is the establishment a recidivous firm per CP 7382.830?	No
4	Did the inspection uncover CGMP, 510(k), or labeling deficiencies that may cause serious adverse health consequences?	No
5	Was this a compliance followup inspection to a warning letter or regulatory action for quality system, 510(k), or labeling violations?	No
6	Did the inspection disclose other significant device violations in addition to quality system, 510(k), or labeling violations which warrant the issuance of a warning letter or regulatory action?	No
7	Did the firm's management make promptly available to FDA all required information that was requested?	Yes

Attachment 4—Cover Page for the Device Quality System Warning Letter Pilot

To: FDA/ORA/OE/DCMO (HFC–210)

(mailing address: 5600 Fishers Lane, Rockville, MD 20857–001)

From: _____

_____District (HFR–_____)

Establishment's name and address:

Date inspection was initiated:

(This cover page should be attached to each warning letter that includes a device CGMP adulteration charge (under section 501(h) of the act). Please refer to the device quality system warning letter pilot before filling out this cover page.)

The attached warning letter was issued for device CGMP deficiencies. Please check all of the following statements that apply:

_____ The establishment did not respond to the FDA–483 within 15 working days.

_____ The establishment provided an unsatisfactory response to the FDA–483 within 15 working days.

_____ The establishment manufactures devices as well as other FDA regulated products.

_____ The establishment manufactures devices that are regulated by CBER.

_____ The inspection uncovered CGMP, 510(k), or labeling deficiencies that may cause serious adverse health consequences.

_____ The inspection disclosed other significant device violations (e.g., medical device reporting or premarket approval) in addition to quality system, 510(k), or labeling violations which warrant the issuance of a warning letter or regulatory action.

_____ The firm's management failed to make promptly available to FDA personnel all requested information and records required by regulations or laws enforced by FDA.

Please record any comments that the district may have concerning this pilot on the back of this cover page.

II. Premarket Notification (510(k)) and Labeling Warning Letter Pilot

Effective Dates: Initiation date March 29, 1999. Termination date September 8, 2000.

A. Background

The impetus for this pilot has its origins in FDA grassroots meetings with the medical device industry. During these meetings, warning letters, for both premarket notification submission (510(k)) and labeling violations, were identified as topics for discussion. Manufacturers contend that:

1. They are often unaware of the agency's concerns about 510(k) and labeling issues until they receive a warning letter;

2. Information about these concerns is often available at the time of the inspection; and

3. If notified during the inspection, manufacturers would have an opportunity to respond, and perhaps resolve, the concerns identified by the investigators.

Consequently, this pilot has been developed in response to the device industry's concerns. The purpose of this pilot is to determine whether notifying firms about 510(k) and labeling issues, in lieu of a warning letter, will result in the efficient resolution of the issues.

B. Pilot Procedures

The 510(k) and labeling warning letter pilot does not apply to the following situations:

1. Advertising and promotion issues;

2. Establishments that manufacture devices as well as other FDA regulated products;

3. Establishments that manufacture devices that are regulated by the Center for Biologics Evaluation and Research (CBER);

4. Any inspection that uncovers CGMP, 510(k), or labeling deficiencies that may cause serious adverse health consequences;[2]

5. A compliance followup inspection when the previous inspection resulted in a warning letter or regulatory action for quality system, 510(k), or labeling violations;

6. Any inspection that discloses other significant device violations (e.g., medical device reporting or premarket approval) in addition to quality system, 510(k), or labeling violations which warrant the issuance of a warning letter or regulatory action;

7. A situation where the firm's management failed to make promptly available to FDA personnel all requested information and records required by regulations or laws enforced by FDA;

8. Devices that were never cleared by FDA with a 510(k) and were not exempted from this requirement (§ 807.81(a)(1) or (a)(2)) (21 CFR 807.81(a)(1) or (a)(2));

9. A major change or modification in the intended use of the device (§ 807.81(a)(3)(ii)); or

10. Electronic products that emit radiation as defined in 21 CFR 1000.3.

Domestic device inspection reports, with endorsements, that identify possible 510(k) violations of § 807.81(a)(3)(i) (a change or modification in the device that could significantly affect the safety or effectiveness of the device) and/or possible labeling violations should be forwarded to the Office of Compliance (OC), Center for Devices and Radiological Health (CDRH), HFZ–306. If CDRH believes that a warning letter situation exits, OC will notify the establishment via an untitled letter within 30 working days. The untitled letter will inform the establishment of the need to correct the violation by submitting either a new 510(k) or an appropriate labeling change. CDRH will send a copy of this letter to the home district. If a warning letter or untitled letter is not warranted, OC will notify the district by memorandum, facsimile, or electronic mail. The district will inform the establishment, in writing, that no correction is required.

Firms will have 15 working days from the date of a CDRH untitled letter to respond. CDRH will have 30 working days to evaluate the firm's response. An exception to this timeframe may occur if CDRH has to consult with the district and/or the firm. If CDRH

[2] ''Serious adverse health consequences'' are to have the same meaning as ''serious injury,'' which is defined in § 803.3(aa)(1).

determines that a firm's response is satisfactory, a warning letter should not be issued. If CDRH is essentially satisfied with the firm's response but needs further clarification, it may seek additional information via telephone or untitled correspondence.

If a firm fails to respond to CDRH's untitled letter, a warning letter should be sent to the establishment by CDRH when the 15 working day timeframe has expired. If CDRH receives a response to the untitled letter within 15 working days, CDRH has 30 working days from the receipt date to determine whether the response is satisfactory. If the written response is determined to be unsatisfactory, CDRH should send a warning letter to the establishment.

When no warning letter is issued by CDRH due to a firm's satisfactory written response, a postinspectional notification letter should be sent by CDRH to the establishment, with a copy to the home district, which includes the following language:

''While this inspection found deficiencies concerning [insert 'premarket notification (510(k)),' 'labeling,' or both as appropriate] that would warrant a warning letter if uncorrected, your written response has satisfied us that you either have taken or are taking appropriate corrective actions. At this time, FDA does not intend to take further action based on these inspectional findings. The agency is relying on your commitment regarding corrective actions and, should we later observe that these deficiencies have not been remedied, future regulatory action (e.g. seizure, injunction and civil penalties) may be taken without further notice.''

When a CDRH decision is made not to send a warning letter due to a satisfactory written response from the firm, the district should classify the inspection as VAI for the labeling or 510(k) issues.

When no warning letter is issued, as described previously, and the next inspection of the firm discloses significant 510(k) and/or labeling deficiencies, then FDA personnel should proceed as if a warning letter had been issued for the previous inspection and consider appropriate enforcement action.

C. Administrative

Copies of all warning letters will be forwarded to the Division of Compliance Management and Operations (DCMO), Office of Enforcement (OE) (HFC–210). When warning letters are not issued for 510(k) or labeling deficiencies under this pilot, copies of the postinspectional notification letters issued for inspections that are initiated between March 29, 1999, and September 8, 2000, should be sent to Jeffrey B. Governale, Division of Compliance Policy (DCP)/OE, HFC–230.

CDRH's OC will monitor the warning and postinspectional notification letters and evaluate the pilot 18 months after it begins. Any questions about this pilot should be directed to Chester T. Reynolds, OC/CDRH, HFZ–300.

II. Comments

Interested persons may, at any time, submit to the Dockets Management Branch (address above) written comments regarding this pilot program. Two copies of any comment are to be submitted, except that individuals may submit one copy. Comments are to be identified with the docket number found in brackets in the heading of this document. Comments will be considered in determining whether to revise, revoke, or adopt this pilot program on a permanent basis. Received comments may be seen in the office above between 9 a.m. and 4 p.m., Monday through Friday.

III. Electronic Access

A copy of the pilot may also be downloaded to a personal computer with access to the World Wide Web (WWW). The Office of Regulatory Affairs (ORA) and the CDRH home pages include the pilot and may be accessed at ''http://www.fda.gov/ora'' or ''http://www.fda.gov/cdrh'', respectively. The pilot will be available on the compliance references or program areas/compliance information pages for ORA and CDRH, respectively.

Dated: March 1, 1999.

William K. Hubbard,

Acting Deputy Commissioner for Policy.

[FR Doc. 99–5523 Filed 3–5–99; 8:45 am]

BILLING CODE 4160–01–F

DEPARTMENT OF HEALTH AND HUMAN SERVICES

Food and Drug Administration

[Docket No. 98D–0964]

''Guidance for Industry: Content and Format of Chemistry, Manufacturing and Controls Information and Establishment Description Information for a Biological In Vitro Diagnostic Product;'' Availability

AGENCY: Food and Drug Administration, HHS.

ACTION: Notice.

SUMMARY: The Food and Drug Administration (FDA) is announcing the availability of a guidance document entitled ''Guidance for Industry: Content and Format of Chemistry, Manufacturing and Controls Information and Establishment Description Information for a Biological In Vitro Diagnostic Product.'' The guidance document is intended to provide guidance to applicants on the content and format of the chemistry, manufacturing and controls (CMC) and establishment description sections of the ''Application to Market a New Drug, Biologic, or an Antibiotic Drug for Human Use'' (revised Form FDA 356h) for a biological in vitro diagnostic product. This action is part of FDA's continuing effort to achieve the objectives of the President's ''Reinventing Government'' initiatives and the FDA Modernization Act of 1997, and is intended to reduce unnecessary burdens for industry without diminishing public health protection.

DATES: Written comments may be submitted at any time.

ADDRESSES: Submit written requests for single copies of the guidance entitled ''Guidance for Industry: Content and Format of Chemistry, Manufacturing and Controls Information and Establishment Description Information for a Biological In Vitro Diagnostic Product'' to the Office of Communication, Training, and Manufacturers Assistance (HFM–40), Center for Biologics Evaluation and Research (CBER), Food and Drug Administration, 1401 Rockville Pike, Rockville, MD 20852–1448. Send one self-addressed adhesive label to assist the office in processing your requests. The guidance document may also be obtained by mail by calling the CBER Voice Information System at 1–800–835–4709 or 301–827–1800, or by fax by calling the FAX Information System at 1–888–CBER–FAX or 301–827–3844. See the **SUPPLEMENTARY INFORMATION** section for electronic access to the guidance.

Submit written comments on the guidance to the Dockets Management Branch (HFA–305), Food and Drug Administration, 5630 Fishers Lane, rm. 1061, Rockville, MD 20852.

FOR FURTHER INFORMATION CONTACT: Stephen M. Ripley, Center for Biologics Evaluation and Research (HFM–17), Food and Drug Administration, 1401 Rockville Pike, Rockville, MD 20852–1448, 301–827–6210.

SUPPLEMENTARY INFORMATION:

I. Background

FDA is announcing the availability of a guidance document entitled ''Guidance for Industry: Content and Format of Chemistry, Manufacturing and Controls Information and Establishment Description Information for a Biological In Vitro Diagnostic Product.'' The guidance document is intended to provide guidance to applicants in completing the CMC section and the establishment description information of revised Form FDA 356h. The guidance document announced in this notice supersedes the draft guidance entitled ''Guidance for Industry: Content and Format of Chemistry, Manufacturing and Controls Information and Establishment

Description Information for a Biological In Vitro Diagnostic Product'' published in the **Federal Register** of November 10, 1998 (63 FR 63067).

In the **Federal Register** of July 8, 1997 (62 FR 36558), FDA announced the availability of Form FDA 356h that will be used as a single harmonized application form for all drug and licensed biological products. Manufacturers may voluntarily begin using this form for a biological in vitro diagnostic product. FDA will announce in the future when manufacturers are required to use this form for all products. Use of the new harmonized Form FDA 356h will allow a biologic product manufacturer to submit one biologics license application instead of two separate applications (product license application and establishment license application).

This guidance document represents the agency's current thinking with regard to the content and format of the CMC and establishment description sections of a license application for a biological in vitro diagnostic product. It does not create or confer any rights for or on any person and does not operate to bind FDA or the public. An alternative approach may be used if such approach satisfies the requirement of the applicable statute, regulations, or both. As with other guidance documents, FDA does not intend this document to be all-inclusive and cautions that not all information may be applicable to all situations. The document is intended to provide information and does not set forth requirements.

II. Comments

Interested persons may, at any time, submit written comments to the Dockets Management Branch (address above) regarding this guidance document. Two copies of any comments are to be submitted, except individuals may submit one copy. Comments are to should be identified with the docket number found in brackets in the heading of this document. A copy of the document and received comments are available for public examination in the Dockets Management Branch between 9 a.m. and 4 p.m., Monday through Friday.

III. Electronic Access

Persons with access to the Internet may obtain the document by using the World Wide Web (WWW). For WWW access, connect to CBER at ''http://www.fda.gov/cber/guidelines.htm''.

Dated: March 1, 1999.

William K. Hubbard,

Acting Deputy Commissioner for Policy.

[FR Doc. 99–5521 Filed 3–5–99; 8:45 am]

BILLING CODE 4160–01–F

DEPARTMENT OF HEALTH AND HUMAN SERVICES

National Institutes of Health

National Center for Research Resources; Notice of Closed Meeting

Pursuant to section 10(d) of the Federal Advisory Committee Act, as amended (5 U.S.C. Appendix 2), notice is hereby given of the following meeting.

The meeting will be closed to the public in accordance with the provisions set forth in sections 552b(c)(4) and 552b(c)(6), Title 5 U.S.C., as amended. The grant applications and the discussions could disclose confidential trade secrets or commercial property such as patentable material, and personal information concerning individuals associated with the grant applications, the disclosure of which would constitute a clearly unwarranted invasion of personal privacy.

Name of Committee: National Center for Research Resources Special Emphasis Panel, Comparative Medicine.

Date: March 25, 1999.

Time: 1:00 pm to 2:00 pm.

Agenda: To review and evaluate grant applications.

Place: Office of Review, National Center for Research Resources, 6705 Rockledge Drive, Bethesda, MD 20892, (Telephone Conference Call).

Contact Person: Bela J. Gulyas, Director, Office of Review, National Center for Research Resources, National Institutes of Health, 6705 Rockledge Drive, MSC 7965, Room 6018, Bethesda, MD 20892, 301–435–0811.

(Catalogue of Federal Domestic Assistance Program Nos. 93.306, Comparative Medicine, 93.306; 93.333, Clinical Research, 93.333; 93.371, Biomedical Technology; 93.389, Research Infrastructure, National Institutes of Health, HHS).

Dated: March 2, 1999.

LaVerne Y. Stringfield,

Committee Management Officer, NIH.

[FR Doc. 99–5660 Filed 3–5–99; 8:45 am]

BILLING CODE 4140–01–M

DEPARTMENT OF HEALTH AND HUMAN SERVICES

National Institutes of Health

National Heart, Lung, and Blood Institute; Notice of Closed Meeting

Pursuant to section 10(d) of the Federal Advisory Committee Act, as amended (5 U.S.C. Appendix 2), notice is hereby given of the following meeting.

The meeting will be closed to the public in accordance with the provisions set forth in sections 552b(c)(4) and 552b(c)(6), Title 5 U.S.C., as amended. The grant applications and the discussions could disclose confidential trade secrets or commercial property such as patentable material, and personal information concerning individuals associated with the grant applications, the disclosure of which would constitute a clearly unwarranted invasion of personal privacy.

Name of Committee: National Heart, Lung, and Blood Institute Special Emphasis Panel HIV in the Lungs, Heart and Blood: Role of Chemokines and Their Receptors.

Date: March 30, 1999.

Time: 8:00 am to 3:00 pm.

Agenda: To review and evaluate grant applications.

Place: Holiday Inn Georgetown, 2101 Wisconsin Avenue, NW., Washington, DC 20007.

Contact Person: Anne P. Clark, Scientific Review Administrator, NIH, NHLBI, DEA, Review Branch, Rockledge II, 6701 Rockledge Drive, Room 7186, Bethesda, MD 20892–7924, (301) 435–0280.

(Catalogue of Federal Domestic Assistance Program Nos. 93.233, National Center for Sleep Disorders Research; 93.837, Heart and Vascular Diseases Research; 93.838, Lung Diseases Research; 93.9839, Blood Diseases and Resources Research, National Institutes of Health, HHS).

Dated: March 2, 1999.

LaVerne Y. Stringfield,

Committee Management Officer, NIH.

[FR Doc. 99–5657 Filed 3–5–99; 8:45 am]

BILLING CODE 4140–01–M

DEPARTMENT OF HEALTH AND HUMAN SERVICES

National Institutes of Health

National Institute of Diabetes and Digestive and Kidney Diseases; Notice of Closed Meetings

Pursuant to section 10(d) of the Federal Advisory Committee Act, as amended (5 U.S.C. Appendix 2), notice is hereby given of the following meetings.

The meetings will be closed to the public in accordance with the

provisions set forth in sections 552b(c)(4) and 552b(c)(6), Title 5 U.S.C., as amended. The grant applications and the discussions could disclose confidential trade secrets or commercial property such as patentable material, and personal information concerning individuals associated with the grant applications, the disclosure of which would constitute a clearly unwarranted invasion of personal privacy.

Name of Committee: National Institute of Diabetes and Digestive and Kidney Diseases Special Emphasis Panel ZDK1 GRB–1(M2)P.

Date: April 8–9, 1999.

Time: April 8, 1999, 7:30 pm to Adjournment.

Agenda: To review and evaluate grant applications.

Place: Holiday Inn Chevy Chase, 5520 Wisconsin Avenue, Chevy Chase, MD 20815.

Contact Person: Carolyn Miles, Scientific Research Administrator, Review Branch, DEA, NIDDK, Natcher Building, Room 6AS–37, National Institutes of Health, Bethesda, MD 20892, (301) 594–7791.

Name of Committee: National Institute of Diabetes and Digestive and Kidney Diseases Special Emphasis Panel, ZDK1 GRB–8(M1)P.

Date: April 14–16, 1999.

Time: April 14, 1999, 8:30 am to adjournment.

Agenda: To review and evaluate grant applications.

Place: Crowne Plaza Hotel, 14th & K Streets, NW., Washington, DC 20005.

Contact Person: Roberta J. Haber, Scientific Research Administrator, Review Branch, DEA, NIDDK, Natcher Building, Room 6AS–25N, National Institutes of Health, Bethesda, MD 20892, (301) 594–8898.

(Catalogue of Federal Domestic Assistance Program Nos. 93.847, Diabetes, Endocrinology and Metabolic Research; 93.848, Digestive Diseases and Nutrition Research; 93.849, Kidney Diseases, Urology and Hematology Research, National Institutes of Health, HHS)

Dated: March 2, 1999.

LaVerne Y. Stringfield,

Committee Management Officer, NIH.

[FR Doc. 99–5658 Filed 3–5–99; 8:45 am]

BILLING CODE 4140–01–M

DEPARTMENT OF HEALTH AND HUMAN SERVICES

Centers for Disease Control and Prevention

[Program Announcement 99018]

Water Intervention Studies To Determine the Fraction of Gastrointestinal Illness Attributable to Drinking Water; Notice of Availability of Funds

A. Purpose

The Centers for Disease Control and Prevention (CDC) announces the availability of fiscal year (FY) 1999 funds for a cooperative agreement program for water intervention studies to determine the amount of gastrointestinal illness attributable to drinking water. This program addresses the ''Healthy People 2000'' priority area(s) of Immunization and Infectious Diseases. The purpose of the program is to provide assistance for conducting two studies: one in a municipality receiving drinking water from a conventionally treated, surface water source and a second in a municipality with a ground water source. Since the amount of waterborne disease in a population can most directly be estimated by determining the rate of gastrointestinal illness in the community and multiplying this by an estimate of the percentage of illness that is attributable to water, these studies will involve measuring both of these parameters in a population.

B. Eligible Applicants

Applications may be submitted by public and private nonprofit organizations and by governments and their agencies; that is, universities, colleges, research institutions, hospitals, other public and private nonprofit organizations, State and local governments or their bona fide agents, and federally recognized Indian tribal governments, Indian tribes, or Indian tribal organizations.

Note: Public Law 104–65 states that an organization described in section 501(c)(4) of the Internal Revenue Code of 1986 that engages in lobbying activities is not eligible to receive Federal funds constituting an award, grant, cooperative agreement, contract, loan, or any other form.

C. Availability of Funds

Approximately $1,800,000 is available in FY 1999 to fund approximately two awards. It is expected that the average award will be $900,000 ranging from $900,000 to $1,800,000. It is expected that the awards will begin on or about April 15, 1999, and will be made for a 12-month budget period within a project period of up to two years. The funding estimate may change.

Continuation awards within an approved project period will be made on the basis of satisfactory progress as evidenced by required reports and the availability of funds.

D. Program Requirements

In conducting activities to achieve the purpose of this program, the recipient shall be responsible for the activities under ''Recipient Activities'' below and CDC shall be responsible for the activities under ''CDC Activities'' below:

Recipient Activities

1. Develop a study design and protocol.
2. Identify a community where residences are served by a single water utility.
3. Conduct a household intervention trial that allows determination of what proportion of illness is attributable to drinking water. For example, studies have been conducted using intervention devices installed in household plumbing to eliminate viable pathogens. Investigators may want to consider conducting a randomized, blinded trial in which control households receive a sham device.
4. Measure disease outcomes among study participants. Examples of such outcomes could include: (a) clinically defined diarrhea, (b) vomiting, (c) laboratory studies of stool from cooperative, ill participants that would be tested broadly for bacterial, parasitic, and viral pathogens, and (d) antibody response to specific pathogens such as Cryptosporidium and caliciviruses in study participants willing to give serum.
5. Collaborate with the water utility, the American Water Works Research Foundation (AAWRF) and its collaborators, and others as appropriate to evaluate the relationship between health outcomes and physical and microbial water quality data.
6. The recipient(s) will develop a Quality Assurance Project Plan (QAPP) and will coordinate the plan with EPA to ensure that the results are of high quality.
7. Determine rates of relevant outcomes in the community in which the intervention study is being conducted. For example, this could be done through ongoing, cross-sectional, random telephone surveys of the population served by the water utility during the study period. Examples of outcomes that could be measured include signs and symptoms of gastrointestinal illness, water consumption patterns, days of work or school missed, etc.
8. Publish the results of the study.

CDC Activities

1. CDC and EPA are available to provide technical assistance in the design and conduct of the research. If needed, this may include:

a. providing technical consultation in the design and conduct of the project, including data collection, evaluation, and analytic approach;

b. facilitating exchange of information among collaborators;

c. performing selected laboratory tests;

d. participating in analysis of research data and the interpretation and dissemination of research findings; and

e. providing educational materials, including working with grantees to develop new materials that might be needed.

2. Assist in the development of a research protocol for IRB review by all institutions participating in the research project. The CDC IRB will review and approve the protocol initially and on at least an annual basis until the research project is completed.

E. Application Content

Use the information in the Program Requirements, Other Requirements, and Evaluation Criteria sections to develop the application content. Your application will be evaluated on the criteria listed, so it is important to follow them in laying out your program plan. The narrative should be no more than 25 double-spaced pages, printed on one side, with one inch margins, and unreduced font.

F. Submission and Deadline

Letter of Intent (LOI)

In order to assist CDC in planning and executing the evaluation of applications submitted under this Program Announcement, all parties intending to submit application(s) are requested to inform CDC of their intention to do so as soon as possible but not later than 30 business days prior to the application due date. Notification should include (1) name and address of institution, (2) name, address, and phone number of contact person, and (3) the name and address of the water utility the applicant intends to collaborate with if awarded this cooperative agreement, and (4) information regarding whether the source water for the households the applicant intends to study is from a ground water source or a surface water source. Notification can be provided by facsimile, postal mail, or electronic mail (E-mail) to Deborah Levy, Ph.D., National Center for Infectious Diseases, 4770 Buford Highway, N.E., Mailstop F–22, Atlanta, Georgia 30341. Facsimile: (770) 488–7761. E-mail address: DEL7@cdc.gov.

Application

Submit the original and five copies of PHS–398 (OMB Number 0925–0001) (adhere to the instructions on the Errata Instruction Sheet for PHS 398). Forms are in the application kit. On or before May 14, 1999, submit the application to: Andrea Wooddall, Grants Management Specialist, Grants Management Branch, Procurement and Grants Office, Announcement 99018, Centers for Disease Control and Prevention, 2920 Brandywine Road, Room 3000, Atlanta, Georgia 30341

If your application does not arrive in time for submission to the independent review group, it will not be considered in the current competition unless you can provide proof that you mailed it on or before the deadline (i.e., receipt from U.S. Postal Service or a commercial carrier; private metered postmarks are not acceptable).

The application should identify a water utility that:

1. For surface water sites: (a) serves a population of ≥ 50,000 persons, (b) has a surface water source known to be challenged with highly variable water quality which at times has evidence of substantial fecal contamination, (c) is served by only one water treatment plant and that plant employs standard, conventional treatment (i.e. coagulation, sedimentation, filtration, and chlorine disinfection), (d) has source water that is difficult to treat (e.g. average finished water turbidity ≥ 0.1 NTU and/or occasional spikes of finished water turbidity or particle counts), and (e) generally does not place treated water in a reservoir for more than 24 hours prior to entering the distribution system; or

2. For ground water sites: (a) serves a population of ≥25,000 persons, (b) is served solely by ground water, (c) is not under the direct influence of surface water, and (d) has information available that will allow inference on likelihood of microbial source water contamination, e.g. multiyear records of microbial source water quality and/or well characterized hydrogeology (such as knowledge of recharge area [1] and sources of fecal contamination), (e) is disinfected, and (f) is not subject to membrane filtration or softening; and

3. Contain written assurance from the water utility that it will collaborate with the grantee, CDC, EPA, AWWARF and its cooperators in the collection and analysis of physical and microbial water quality data. The reason for this requirement is that it will be useful to examine the relationship between water quality indicators and health outcomes. AWWARF will be simultaneously issuing requests for proposals (RFPs) for the collection and analysis of physical and microbiological water quality data from the utilities participating in the studies funded through this CDC cooperative agreement. One of these RFPs will be for the surface water site (RFP 2850) and the other for the ground water site (RFP 2851). These AWWARF RFPs can be found on the World Wide Web at: http://www.awwarf.com/newprojects/rfps/98rfps.htm. The types of water quality data collected will be determined by AWWARF, EPA, and the grantee in collaboration with the utility. It would be advantageous if the water utility continuously monitors turbidity or particle counts of water coming from each individual filter bed. Such monitoring would need to be accompanied by frequent equipment calibration for quality assurance and quality control; and

4. Provide information regarding the number of households the applicant anticipates recruiting into the study and the anticipated drop out rate. The study should have power to detect an attributable fraction of gastrointestinal illness due to drinking water that is less than 15 percent. It would be advantageous to be able to detect an attributable fraction of gastrointestinal illness due to drinking water that is less than or equal to 10 percent.

G. Evaluation Criteria

Each application will be evaluated individually against the following criteria by an independent review group appointed by CDC.

1. Background and Need (10 points)

Extent to which applicant's discussion of the background for the proposed project demonstrates a clear understanding of the purpose and objectives of this cooperative agreement program.

2. Capacity and Personnel (35 points total)

a. Extent to which applicant describes adequate resources and facilities (both technical and administrative) for conducting the project. (10 points)

b. Extent to which applicant documents that professional personnel involved in the project are qualified and have past experience and achievements in research related to that proposed as evidenced by curriculum vitae, publications, etc. (10 points)

c. Extent to which applicant includes letters of support from the proposed water utility, non-applicant organizations, individuals, etc. Extent to which the letters clearly indicate commitment to participate as described in the operational plan, which must include the water utility's intent to provide specific water quality data and collaborate with others involved in the study. If appropriate, the extent to which letters from non-participating local and State health departments express their support of the operational

[1] The recharge area of a well is the land surface from which water that is drawn into the well originated. Typical sources of human fecal contamination include septic systems, sewers (which invariably leak), and rivers subject to sewage treatment plant discharges.

plan (15 points). Do not include letters of support from CDC or EPA personnel.

3. Objectives and Technical Approach (55 points total)

a. Extent to which applicant adequately describes specific objectives of the proposed project which are consistent with the purpose and goals of this cooperative agreement program and which are measurable and time-phased. (10 points)

b. Extent to which applicant presents a detailed operational plan for initiating and conducting the project, which clearly and appropriately addresses all ''Recipient Activities.'' Extent to which applicant clearly identifies specific assigned responsibilities for all key professional personnel. Extent to which the plan clearly describes applicant's technical approach/methods for conducting the proposed studies and extent to which the plan is adequate to accomplish the objectives. Extent to which the described cohort and water supply will be appropriate for achieving the goals of this request for assistance. Extent to which applicant describes specific study protocols or plans for the development of study protocols that are appropriate for achieving project objectives. If there is a laboratory component to the proposal, the extent to which plans for ensuring quality of measurements are included. If the proposed project involves human subjects, whether or not exempt from the DHHS regulations, the extent to which adequate procedures are described for the protection of human subjects. This specifically includes working with CDC and EPA to obtain human subjects clearances and approval for data collection activities.

Note: Objective Review Group (ORG) recommendations on the adequacy of protections include: (1) protections appear adequate and there are no comments to make or concerns to raise, or (2) protections appear adequate, but there are comments regarding the protocol, or (3) protections appear inadequate and the ORG has concerns related to human subjects, or (4) disapproval of the application is recommended because the research risks are sufficiently serious and protection against the risks are inadequate as to make the entire application unacceptable. Extent to which the applicant has met the CDC Policy requirements regarding the inclusion of women, ethnic, and racial groups in the proposed research. This includes: (1) the proposed plan for inclusion of both sexes and racial and ethnic minority populations for appropriate representation, (2) the proposed justification when representation is limited or absent, (3) a statement as to whether the design of the study is adequate to measure differences when warranted, and (4) a statement as to whether the plans for recruitment and outreach for study participants include the process of establishing partnerships with community(ies) and recognition of mutual benefits. (25 points)

c. Extent to which the applicant describes adequate and appropriate collaboration with CDC, EPA and/or others (e.g. water utilities and health departments) during various phases of the project. (10 points)

d. Extent to which the applicant provides a detailed and adequate plan for evaluating study results and for evaluating study results for evaluating progress toward achieving project objectives. (10 points)

4. Budget (not scored)

Extent to which the proposed budget is reasonable, clearly justifiable, and consistent with the intended use of grant/cooperative agreement funds.

H. Other Requirements

Technical Reporting Requirements

Provide CDC with original plus two copies of

1. Progress reports (annual);

2. Financial status report, no more than 90 days after the end of the budget period; and

3. Final financial status and performance reports, no more than 90 days after the end of the project period.

Send all reports to: Andrea Wooddall, Grants Management Specialist, Grants Management Branch, Procurement and Grants Office, Centers for Disease Control and Prevention, 2920 Brandywine Road, Room 3000, Atlanta, GA 30341.

The following additional requirements are applicable to this program. For a complete description of each, see Attachment 1, in the application kit.

AR–1	Human Subjects Requirements.
AR–2	Requirements for Inclusion of Women and Racial and Ethnic Minorities in Research.
AR–7	Executive Order 12372 Review.
AR–9	Paperwork Reduction Act Requirements.
AR–10	Smoke-Free Workplace Requirements.
AR–11	Healthy People 2000.
AR–12	Lobbying Restrictions.
AR–14	Accounting System Requirements.
AR–15	Proof of Non-Profit Status.

I. Authority and Catalog of Federal Domestic Assistance Number

This program is authorized under the Public Health Service Act Sections 301(a)[42 U.S.C. 241(a)], 317(k)(1)(2), [42 U.S.C. 247b (k)(1)] and [247b(k)(2)], as amended. The Catalog of Federal Domestic Assistance number is 93.283.

J. Where To Obtain Additional Information

Please refer to Program Announcement 99018 when you request information. For a complete program description, information on application procedures, an application package, and business management technical assistance, contact: Andrea Wooddall, Grants Management Specialist, Grants Management Branch, Procurement and Grants Office, Announcement 99018, Centers for Disease Control and Prevention, 2920 Brandywine Road, Room 3000, Atlanta, GA 30341, telephone (770) 488–2751, E-mail address ayw3@cdc.gov.

See also the CDC home page on the Internet: http://www.cdc.gov.

For program technical assistance, contact Deborah Levy, Ph.D., Division of Parasitic Diseases, National Center for Infectious Diseases, Center for Disease Control and Prevention, 4770 Buford Highway, Mail Stop F22, Atlanta, GA 30341, telephone (770) 488–7760, E-mail address DEL7@cdc.gov.

To receive additional written information and to request an application kit, call 1–888-GRANTS4 (1–888–472–6874). You will be asked to leave your name and address and will be instructed to identify the Announcement number of interest.

Dated: March 2, 1999.

John L. Williams,

Director, Procurement and Grants Office, Centers for Disease Control and Prevention (CDC).

[FR Doc. 99–5559 Filed 3–5–99; 8:45 am]

BILLING CODE 4163–18–P

DEPARTMENT OF HEALTH AND HUMAN SERVICES

Substance Abuse and Mental Health Services Administration

Fiscal Year (FY) 1999 Funding Opportunities

AGENCY: Substance Abuse and Mental Health Services Administration, HHS.

ACTION: Notice of funding availability.

SUMMARY: The Substance Abuse and Mental Health Services Administration (SAMHSA) Center for Substance Abuse Treatment (CSAT) and the Center for Mental Health Services (CMHS) announce the availability of FY 1999 funds for the following activities. These activities are discussed in more detail under Section 4 of this notice. This notice is not a complete description of the activities; potential applicants *must* obtain a copy of the Guidance for

Applicants (GFA) before preparing an application.

Activity	Application deadline	Estimated funds available (in millions)	Estimated No. of awards	Project period
CSAT Action Grant Program	5/10/99	$1.5	10	1 yr.
Community Treatment Program	5/10/99	5.3	15	Up to 3 yrs.
Basic Action Grant, Hispanic Priority	5/10/99	3	20	1 yr.

Note: SAMHSA also published notices of available funding opportunities for FY 1999 in subsequent issues of the **Federal Register**.

The actual amount available for awards and their allocation may vary, depending on unanticipated program requirements and the volume and quality of applications. Awards are usually made for grant periods from one to three years in duration. FY 1999 funds for activities discussed in this announcement were appropriated by the Congress under Public Law No. 105–277. SAMHSA's policies and procedures for peer review and Advisory Council review of grant and cooperative agreement applications were published in the **Federal Register** (Vol. 58, No. 126) on July 2, 1993.

The Public Health Service (PHS) is committed to achieving the health promotion and disease prevention objectives of Healthy People 2000, a PHS-led national activity for setting priority areas. The SAMHSA Centers' substance abuse and mental health services activities address issues related to Healthy People 2000 objectives of Mental Health and Mental Disorders; Alcohol and Other Drugs; Clinical Preventive Services; HIV Infection; and Surveillance and Data Systems. Potential applicants may obtain a copy of Healthy People 2000 (Full Report: Stock No. 017–001–00474–0) or Summary Report: Stock No. 017–001–00473–1) through the Superintendent of Documents, Government Printing Office, Washington, DC 20402–9325 (Telephone: 202–512–1800).

GENERAL INSTRUCTIONS: Applicants must use application form PHS 5161–1 (Rev. 5/96; OMB No. 0937–0189). The application kit contains the GFA (complete programmatic guidance and instructions for preparing and submitting applications), the PHS 5161–1 which includes Standard Form 424 (Face Page), and other documentation and forms. Application kits may be obtained from the organization specified for each activity covered by this notice (see Section 4).

When requesting an application kit, the applicant must specify the particular activity for which detailed information is desired. This is to ensure receipt of all necessary forms and information, including any specific program review and award criteria.

The PHS 5161–1 application form and the full text of each of the activities (i.e., the GFA) described in Section 4 are available electronically via SAMHSA's World Wide Web Home Page (address: http://www.samhsa.gov).

APPLICATION SUBMISSION: Unless otherwise stated in the GFA, applications must be submitted to: SAMHSA Programs, Center for Scientific Review, National Institutes of Health, Suite 1040, 6701 Rockledge Drive MSC–7710, Bethesda, Maryland 20892–7710 *

(* Applicants who wish to use express mail or courier service should change the zip code to 20817.)

APPLICATION DEADLINES: The deadlines for receipt of applications are listed in the table above. Please note that the deadlines may differ for the individual activities.

Competing applications must be received by the indicated receipt dates to be accepted for review. An application received after the deadline may be acceptable if it carries a legible proof-of-mailing date assigned by the carrier and that date is not later than one week prior to the deadline date. Private metered postmarks are not acceptable as proof of timely mailing.

Applications received after the deadline date and those sent to an address other than the address specified above will be returned to the applicant without review.

FOR FURTHER INFORMATION CONTACT: Requests for activity-specific technical information should be directed to the program contact person identified for each activity covered by this notice (see Section 4).

Requests for information concerning business management issues should be directed to the grants management contact person identified for each activity covered by this notice (see Section 4).

SUPPLEMENTARY INFORMATION: To facilitate the use of this Notice of Funding Availability, information has been organized as outlined in the Table of Contents below. For each activity, the following information is provided:

- Application Deadline.
- Purpose.
- Priorities.
- Eligible Applicants.
- Grants/Amounts.
- Catalog of Federal Domestic Assistance Number.
- Contacts.
- Application Kits.

Table of Contents

1. Program Background and Objectives
2. Special Concerns
3. Criteria for Review and Funding
   3.1 General Review Criteria
   3.2 Funding Criteria for Scored Applications
4. Special FY 1999 Substance Abuse and Mental Health Services Activities
   4.1 Community Action Grants for Service Systems Change (Short Title: CSAT Action Grant, GFA No. TI 99–003)
   4.2 Comprehensive Community Treatment Program for the Development of New and Useful Knowledge (Short Title: Community Treatment Program, PA No. 99–050)
   4.3 Community Action Grants For Service Systems Change-Phase I (Short Title: Basic Action Grant, Hispanic Priority, GFA No. SM 99–007)
   4.4 SAMHSA Technical Assistance Workshop
5. Public Health System Reporting Requirements
6. PHS Non-use of Tobacco Policy Statement
7. Executive Order 12372

1. Program Background and Objectives

SAMHSA's mission within the Nation's health system is to improve the quality and availability of prevention, early intervention, treatment, and rehabilitation services for substance abuse and mental illnesses, including co-occurring disorders, in order to improve health and reduce illness, death, disability, and cost to society.

Reinventing government, with its emphases on redefining the role of Federal agencies and on improving customer service, has provided SAMHSA with a welcome opportunity to examine carefully its programs and activities. As a result of that process, SAMHSA moved assertively to create a renewed and strategic emphasis on using its resources to generate

knowledge about ways to improve the prevention and treatment of substance abuse and mental illness and to work with State and local governments as well as providers, families, and consumers to effectively use that knowledge in everyday practice.

SAMHSA's FY 1999 Knowledge Development and Application (KD&A) agenda is the outcome of a process whereby providers, services researchers, consumers, National Advisory Council members and other interested persons participated in special meetings or responded to calls for suggestions and reactions. From this input, each SAMHSA Center developed a ''menu'' of suggested topics. The topics were discussed jointly and an agency agenda of critical topics was agreed to. The selection of topics depended heavily on policy importance and on the existence of adequate research and practitioner experience on which to base studies. While SAMHSA's FY 1999 KD&A programs will sometimes involve the evaluation of some delivery of services, they are services studies and application activities, not merely evaluation, since they are aimed at answering policy-relevant questions and putting that knowledge to use.

SAMHSA differs from other agencies in focusing on needed information at the services delivery level, and in its question-focus. Dissemination and application are integral, major features of the programs. SAMHSA believes that it is important to get the information into the hands of the public, providers, and systems administrators as effectively as possible. Technical assistance, training, preparation of special materials will be used, in addition to normal communications means.

SAMHSA also continues to fund legislatively-mandated services programs for which funds are appropriated.

2. Special Concerns

SAMHSA's legislatively-mandated services programs do provide funds for mental health and/or substance abuse treatment and prevention services. However, SAMHSA's KD&A activities do not provide funds for mental health and/or substance abuse treatment and prevention services except sometimes for costs required by the particular activity's study design. Applicants are required to propose true knowledge application or knowledge development and application projects. Applications seeking funding for services projects under a KD&A activity will be considered nonresponsive.

Applications that are incomplete or nonresponsive to the GFA will be returned to the applicant without further consideration.

3. Criteria for Review and Funding

Consistent with the statutory mandate for SAMHSA to support activities that will improve the provision of treatment, prevention and related services, including the development of national mental health and substance abuse goals and model programs, competing applications requesting funding under the specific project activities in Section 4 will be reviewed for technical merit in accordance with established PHS/SAMHSA peer review procedures.

3.1 General Review Criteria

As published in the **Federal Register** on July 2, 1993 (Vol. 58, No. 126), SAMHSA's ''Peer Review and Advisory Council Review of Grant and Cooperative Agreement Applications and Contract Proposals,'' peer review groups will take into account, among other factors as may be specified in the application guidance materials, the following general criteria:

- Potential significance of the proposed project;
- Appropriateness of the applicant's proposed objectives to the goals of the specific program;
- Adequacy and appropriateness of the proposed approach and activities;
- Adequacy of available resources, such as facilities and equipment;
- Qualifications and experience of the applicant organization, the project director, and other key personnel; and
- Reasonableness of the proposed budget.

3.2 Funding Criteria for Scored Applications

Applications will be considered for funding on the basis of their overall technical merit as determined through the peer review group and the appropriate National Advisory Council (if applicable) review process.

Other funding criteria will include:

- Availability of funds.

Additional funding criteria specific to the programmatic activity may be included in the application guidance materials.

4. Special FY 1999 SAMHSA Activities

4.1 Community Action Grants For Service Systems Change (Short Title: CSAT Action Grant Program, GFA No. TI 99–003)

- Application Deadline: May 10, 1999.
- Purpose: The Substance Abuse and Mental Health Services Administration's (SAMHSA) Center for Substance Abuse Treatment (CSAT) announces the availability of funds to communities for supporting the adoption of specific exemplary practices related to the delivery or organization of services or supports into their systems of care for adolescents and adults with alcohol and other drug use problems. This program is designed to stimulate activities by communities that will result in adoption of specific exemplary service delivery practices that yield the best results for these target populations.

The CSAT Action Grant Program is intended to stimulate the adoption of exemplary practices through convening partners, building consensus, aiding in eliminating barriers, decision-support and adaptation of service models to meet local needs. The term exemplary practice connotes that the proposed practice has a reliable record of improving outcomes for those receiving the service. A proven outcome-based record of success will be a prerequisite to Federal support for adoption of a proposed exemplary practice. Grants will not support direct funding of service delivery.

The Program is designed to encourage communities to identify and build consensus around exemplary service delivery practices that meet their own needs, and that meet criteria identified in the full announcement for defining what constitutes an exemplary practice. For purposes of this program, exemplary practices are limited to those that involve service delivery or the organization of services or supports. Proposed exemplary practices should be limited to practices which are consistent with the concept of systems of care as defined in the full announcement. Grant funds may be used for any activity that is part of the consensus building and decision-support process. Individual projects will be successful if a decision to adopt the proposed practice is made.

- Priorities: None.
- Eligible Applicants: Applications for grants will be accepted from public and private entities. Public entities include State and local government agencies, and federally designated Indian tribes and tribal organizations. Private entities include those organized as not-for-profits and those organized as for-profits. Such organizations include, but are not necessarily limited to, those responsible for service delivery policy, those representing consumers and families, those providing services to the target population, and those responsible for training and accrediting service providers.
- Grants/Amounts: An estimated $1.5 million is available under the CSAT

Action Grant Program. Award amounts will range from approximately $50,000 to not more than $150,000. These funds will support approximately 10 or more grant awards in FY 1999. CSAT projects will be funded for 1 year.

- Catalog of Domestic Federal Assistance: 93.230.
- Program Contact: For programmatic or technical assistance (not for application kits) contact: Clifton Mitchell or Jane Ruiz, Division of Practice and Systems Development, Center for Substance Abuse Treatment, SAMHSA, 5600 Fishers Lane, Rockville, MD 20857, (301) 443–8802.

For grants management assistance, contact: Andrea Brandon, Grants Management Specialist, Substance Abuse and Mental Health Services, Administration, Rockwall II, 6th Floor, 5600 Fishers Lane, Rockville, MD 20857, (301) 443–9667.

- Application kits are available from: National Clearinghouse for Alcohol and Drug Information, P.O. Box 2345, Rockville, Maryland 20847–2345, Telephone: 1–800–729–6686.

4.2 Comprehensive Community Treatment Program for the Development of New and Useful Knowledge (Short Title: Community Treatment Program, PA No. 99–050)

- Initial Application Deadline: May 10, 1999 (and depending on the availability of funds, annual receipt dates of September 10, January 10 and May 10 thereafter).
- Purpose: The Substance Abuse and Mental Health Services Administration (SAMHSA) Center for Substance Abuse Treatment (CSAT) announces the availability of grants to support the development or modification of treatment approaches for special populations and/or service settings and to support rigorous study of their effectiveness.

The purpose of this program is to generate new knowledge about three aspects of substance abuse treatment: (1) special populations, (2) integrated substance abuse treatment, screening, and early intervention in non-traditional settings, and (3) innovative programs.

This grant program is a vehicle by which treatment providers and other experts in the substance abuse treatment field can identify innovative clinical and service delivery approaches in need of development and study. Through this announcement, CSAT will support three types of grants: (1) full studies of treatment programs and services, (2) exploratory/pilot studies; and (3) enhancement/expansion grants. Applicants must clearly indicate which type of grant they are applying for in their application to SAMHSA. Lastly, CSAT seeks to promote partnerships and collaboration between community-based organizations, to foster broad participation among researchers, practitioners, consumers, and payers, and to support the development of an infrastructure to facilitate knowledge development.

- Priorities: None.
- Eligible Applicants: Applications for full studies of treatment programs and services and exploratory/pilot studies may be submitted by public and domestic private nonprofit and for-profit entities, such as units of State or local government, community-based organizations and State or private universities, colleges, and hospitals.

Applications for enhancement/expansion grants may be submitted by currently active CSAT grantees (including those in no cost extension periods) who can demonstrate successful implementation of planned activities in their current project. These grants are restricted to currently active grantees because their studies are in place allowing them to immediately proceed to the next step of expanding the project's scope to improve the knowledge base. In addition, because their study structure, database, enrolled participants, relationships with participants and their families and collaborating organizations are already established, start-up time for the enhancement/expansion is minimal.

- Grants/Amounts: It is estimated that $5.3 million will be available to support approximately 15 awards under this announcement in FY 1999. The amount of an award is expected to range from $100,000 to $500,000 in total costs (direct + indirect). Funds will be divided evenly among the three types of grants. The number of applications funded in each group will depend on the quality of applications as determined by peer review. Funds may be used to conduct all aspects of data collection and evaluation. Limited funds are available to support substance abuse treatment intervention services and substance abuse related services necessary for successful conduct of the proposed study. Support may be requested for a period of up to 3 years. Annual awards will be made subject to continued availability of funds and progress achieved.
- Catalog of Domestic Federal Assistance: 93.230.
- Program Contact: For programmatic or technical assistance (not for application kits) contact: Thomas Edwards, Jr., Branch Chief, Organization of Services Branch/ Division of Practice and Systems Development, Center for Substance Abuse Treatment, Substance Abuse and Mental Health Services Administration, Rockwall II, Suite 740, 5600 Fishers Lane, Rockville, MD 20857, (301) 443–8453.

For grants management assistance, contact: Peggy Jones, Grants Management Officer, Division of Grants Management, OPS, Substance Abuse and Mental Health Services Administration, Rockwall II, 6th Floor, 5600 Fishers Lane, Rockville, Maryland 20857, (301) 443–9666.

- Application kits are available from: National Clearinghouse for Alcohol and Drug Information, P.O. Box 2345, Rockville, Maryland 20847–2345, 1–800–729–6686.

4.3 Community Action Grants For Service Systems Change-Phase I (Short Title: Basic Action Grant, Hispanic Priority, GFA No. SM 99–007)

- Application Deadline: May 10, 1999.
- Purpose: The goal of the Action Grant Program is to promote the adoption of exemplary practices related to the delivery and/or organization of services or supports for children with serious emotional disturbances and adults with serious mental illness who may also have co-occurring disorders. (Basic Program)

Additionally, the Action Grant Program establishes a priority initiative for Hispanic Communities to promote the adoption of exemplary practices for Hispanic adults and adolescents that need prevention services because they are at-risk for alcohol and illicit drug problems or treatment services because they are seriously chemically dependent and/or mentally ill. (Hispanic Priority initiative)

It is understood that adoption of exemplary practices involves more than consensus building and decisions to act. Projects for both the Basic Program and the Hispanic Priority initiative will be successful if a grantee can develop consensus among key stakeholders on the adaptations of the chosen exemplary practice needed for that community and on a plan for implementing the adapted practice.

- Priorities: None.
- Eligible Applicants: Applications may be submitted by units of State or local governments and by domestic private nonprofit and for-profit organizations such as community-based organizations, universities, colleges, and hospitals. SAMHSA encourages applications from consumer and family organizations.

Applications for the Hispanic Priority initiative must target Hispanics, identify an exemplary practice specific to the

needs of Hispanic Americans and demonstrate the involvement of Hispanic community leadership.

• Grants/Amounts: It is estimated that approximately $1.5 million will be available under the Basic Program to support approximately 10 awards in FY 1999. The average award is expected to range from $50,000 to $150,000 in total costs.

In addition to the estimated $1.5 million available under the Basic Program noted above, an additional $1.5 million will be made available to approximately 10 awards under the Hispanic Priority initiative in FY 1999. The average award under this initiative is expected to range from $50,000 to not more than $150,000 in total costs.

CMHS Action Grant projects will be funded for one year.

• Catalog of Federal Domestic Assistance Number: 93.125.

• Program Contact: For programmatic or technical information regarding Adult Serious Mentally Ill Populations, contact: Santo (Buddy) Ruiz, Community Support Programs Branch, Division of Knowledge Development and Systems Change, Center for Mental Health Services, Substance Abuse and Mental Health Service Administration, 5600 Fishers Lane, Room 11C–22, Rockville, MD 20857, (301) 443–3653.

For programmatic or technical information regarding Homeless Populations, contact: Larry W. Rickards, Ph.D., Homeless Program Branch, Division of Knowledge Development and Systems Change, Center for Mental Health Services, Substance Abuse and Mental Health Service Administration, 5600 Fishers Lane, Room 11C–05, Rockville, MD 20857, (301) 443–3706.

For programmatic or technical information regarding Children and Adolescents with Serious Emotional Disorders and their Families, contact: Michele Herman, Child, Adolescents and Family Services Branch, Division of Knowledge Development and Systems Change, Center for Mental Health Services, Substance Abuse and Mental Health Service Administration, 5600 Fishers Lane, Room 18–49, Rockville, MD 20857, (301) 443–1333.

For programmatic or technical information regarding Substance Abuse Treatment, contact: Jane Ruiz, Division of Practice and Systems Development, Clinical Interventions Branch, Center for Substance Abuse Treatment, Substance Abuse and Mental Health Services Administration, Rockwall II Building, Suite 740, 5600 Fishers Lane, Rockville, Maryland 20857, (301) 443–8237.

For programmatic or technical information regarding Substance Abuse Prevention, contact: Donna Simms d'Almeida, Division of State and Community Systems Development, Center for Substance Abuse Prevention, Substance Abuse and Mental Health Services Administration, Rockwall II Building, Suite 930, 5600 Fishers Lane, Rockville, Maryland 20857, (301) 443–1789.

Questions regarding Grants Management issues may be directed to: Stephen J. Hudak, Division of Grants Management, OPS, Substance Abuse and Mental Health Services Administration, Room 15C–05, 5600 Fishers Lane, Rockville, MD 20857, (301) 443–4456.

• For application kits, contact: Knowledge Exchange Network (KEN), P.O. Box 42490, Washington, DC 20015, Voice: (800)789–2647, TTY: (301)443–9006, FAX: (301)984–8796.

4.4. SAMHSA Technical Assistance Workshop

SAMHSA is sponsoring three technical assistance workshops for potential applicants. The workshops will be held at the following locations: March 11, 1999—Washington, DC; March 17, 1999—Chicago, IL; and March 19—Los Angeles, CA. For more information, please call Ms. Lisa Wilder, Workshop Coordinator, at 301–984–1471, extension 333.

5. Public Health System Reporting Requirements

The Public Health System Impact Statement (PHSIS) is intended to keep State and local health officials apprised of proposed health services grant and cooperative agreement applications submitted by community-based nongovernmental organizations within their jurisdictions.

Community-based nongovernmental service providers who are not transmitting their applications through the State must submit a PHSIS to the head(s) of the appropriate State and local health agencies in the area(s) to be affected not later than the pertinent receipt date for applications. This PHSIS consists of the following information:

a. A copy of the face page of the application (Standard form 424).

b. A summary of the project (PHSIS), not to exceed one page, which provides:

(1) A description of the population to be served.

(2) A summary of the services to be provided.

(3) A description of the coordination planned with the appropriate State or local health agencies.

State and local governments and Indian Tribal Authority applicants are not subject to the Public Health System Reporting Requirements.

Application guidance materials will specify if a particular FY 1999 activity described above is/is not subject to the Public Health System Reporting Requirements.

6. PHS Non-Use of Tobacco Policy Statement

The PHS strongly encourages all grant and contract recipients to provide a smoke-free workplace and promote the non-use of all tobacco products. In addition, Public Law 103–227, the Pro-Children Act of 1994, prohibits smoking in certain facilities (or in some cases, any portion of a facility) in which regular or routine education, library, day care, health care, or early childhood development services are provided to children. This is consistent with the PHS mission to protect and advance the physical and mental health of the American people.

7. Executive Order 12372

Applications submitted in response to all FY 1999 activities listed above are subject to the intergovernmental review requirements of Executive Order 12372, as implemented through DHHS regulations at 45 CFR Part 100. E.O. 12372 sets up a system for State and local government review of applications for Federal financial assistance. Applicants (other than Federally recognized Indian tribal governments) should contact the State's Single Point of Contact (SPOC) as early as possible to alert them to the prospective application(s) and to receive any necessary instructions on the State's review process. For proposed projects serving more than one State, the applicant is advised to contact the SPOC of each affected State. A current listing of SPOCs is included in the application guidance materials. The SPOC should send any State review process recommendations directly to: Office of Extramural Activities Review, Substance Abuse and Mental Health Services Administration, Parklawn Building, Room 17–89, 5600 Fishers Lane, Rockville, Maryland 20857.

The due date for State review process recommendations is no later than 60 days after the specified deadline date for the receipt of applications. SAMHSA does not guarantee to accommodate or explain SPOC comments that are received after the 60-day cut-off.

Dated: March 2, 1999.

Richard Kopanda,

Executive Officer, SAMHSA.

[FR Doc. 99–5586 Filed 3–5–99; 8:45 am]

BILLING CODE 4162–20–P

DEPARTMENT OF THE INTERIOR

Office of the Secretary

List of Programs Eligible for Inclusion in Fiscal Year 2000 Annual Funding Agreements to be Negotiated With Self-Governance Tribes by Interior Bureaus Other than the Bureau of Indian Affairs

AGENCY: Office of the Secretary, Interior.

ACTION: Notice.

SUMMARY: This notice lists programs or portions of programs that are eligible for inclusion in Fiscal Year 2000 annual funding agreements with self-governance tribes and lists programmatic targets for each of the non-BIA bureaus, pursuant to section 405(c)(4) of the Tribal Self-Governance Act.

DATES: This notice expires on September 30, 2000.

ADDRESSES: Inquiries or comments regarding this notice may be directed to the Office of Self-Governance, 1849 C Street NW, 2548 MIB, Washington, DC 20240. Telephone (202) 219–0240 or to the bureau points of contact listed below.

SUPPLEMENTARY INFORMATION:

I. Background

Title II of the Indian Self-Determination and Education Assistance Act Amendments of 1994 (P.L. 103–413, the ''Self-Governance Act'' or the ''Act'') instituted a permanent tribal self-governance program at the Department of the Interior (DOI). Under the self-governance program certain programs, functions, services, and activities or portions thereof in Interior bureaus other than BIA are eligible to be planned, conducted, consolidated, and administered by a self-governance tribal government.

Under section 405(c) of the Self-Governance Act, the Secretary of the Interior is required to publish annually: (1) A list of non-BIA programs, services, activities, and functions or portions thereof, that are eligible for inclusion in agreements negotiated under the self-governance program; and (2) programmatic targets for these bureaus.

Under the Self-Governance Act, two categories of non-BIA programs are eligible for self-governance funding agreements. Under section 403(b)(2) of the Act, any non-BIA program, service, function or activity that is administered by Interior that is ''otherwise available to Indian tribes or Indians,'' can be administered by a tribal government through a self-governance agreement. The Department interprets this provision to authorize the inclusion of not only programs eligible for self-determination contracting under Title I of the Indian Self-Determination and Education Assistance Act (P.L. 93–638), but also other programs that the Department determines are appropriate and available under other laws for contracting out or including in cooperative agreements.

Section 403(b)(2) also specifies that ''nothing in this subsection may be construed to provide any tribe with a preference with respect to the opportunity of the tribe to administer programs, services, functions and activities, or portions thereof, unless such preference is otherwise provided for by law.'' Under section 403(c) of the Act, the Secretary may include other programs, services, functions, and activities, or portions thereof, that are of ''special geographic, historical, or cultural significance'' to a self-governance tribe.

Under section 403(k) of the Self-Governance Act, annual agreements cannot include programs, services, functions, or activities that are inherently Federal or where the statute establishing the existing program does not authorize the type of participation sought by the tribe. However, a tribe (or tribes) need not be identified in the authorizing statutes in order for a program or element to be included in a self-governance agreement. While general legal and policy guidance regarding what constitutes an inherently Federal function exists, we will determine whether a specific function is inherently Federal on a case-by-case basis considering the totality of circumstances.

The Department received two comments on the proposed list of Non-BIA programs. In general, the commentors thought the list could be clearer and that programmatic targets were too low. In response to these commenters, the Department has adopted the following suggested language. In part ''III. Eligible Programs.'' the following language will be added.

Tribes may also want to refer to the Secretary's January, 1995 Report to Congress for a list of potential programs and portions of programs.

In addition the following language will be added to the last paragraph in part III:

Tribes with an interest in such potential agreements are encouraged to begin discussions with the appropriate non-BIA bureau.

Based upon the concern that programmatic targets are too low, the following language will be added to the preamble ''Section IV. Programmatic Targets.''

During Fiscal Year 2000, Each non-BIA bureau will negotiate Self Governance annual funding agreements for its eligible programs beyond those already negotiated.

The following language will be deleted from Section ''IV. Programmatic Targets.''

Each of the non-BIA bureaus will negotiate at least one annual funding agreement with a self-governance tribe for implementation in Fiscal Year 2000.

II. Annual Funding Agreements Between Self-Governance Tribes and Non-BIA Bureaus of the Department of the Interior

In Fiscal Year 1996, an initial funding agreement was negotiated between the Bureau of Reclamation and the Gila River Indian Community to design and construct the community distribution system on reservation lands as authorized by Section 301(a) of the Colorado River Basin Act. Successor annual funding agreements for the continuation of this project were entered into for Fiscal Year 1997 and Fiscal Year 1998.

In Fiscal Year 1998, two agreements were negotiated by the National Park Service. The annual funding agreement with Kawerak, Inc., supported by funds from the shared Beringian heritage program, builds on the previous two agreements and covers work to be completed in Fiscal Year 1999. This work will result in a more complete record of the Bering Strait Region's Inupiat, St. Lawrence Island Yupik and Southern Norton Sound Yupik culture, history, knowledge and tradition.

III. Eligible Programs of the Department of the Interior non-BIA Bureaus

Following this paragraph is a listing by bureau of the types of non-BIA programs, or portions thereof, that may be eligible for self-governance annual funding agreements because they are either ''otherwise available to Indians'' and not precluded by any other law, or may have ''special geographic, historical, or cultural significance'' to a participating tribe. This summary is a general listing that represents the bureaus' best estimates of activities that may be available for negotiation at the request of the self-governance tribe.

The following list represents the most current information on programs potentially available to Tribes under a Self-Governance agreement. However, Tribes may also want to refer to the Secretary's January, 1995 Report to Congress, which also contains a list of

potential programs and portions of programs.

The Department will also consider for inclusion in annual funding agreements other programs or activities not included in the following list, but which, upon request of a self-governance tribe, the Department determines to be eligible under either sections 403(b)(2) or 403(c) of the Act. Tribes with an interest in such potential agreements are encouraged to begin discussions with the appropriate non-BIA bureau.

A. Eligible Programs of the Bureau of Land Management (BLM)

BLM management responsibilities cover a wide range of areas, such as recreational activities, timber, range and minerals management, wildlife habitat management and watershed restoration. In addition, BLM is responsible for the survey of certain Federal and tribal lands. Two programs provide tribal services: (1) Tribal and allottee minerals management; and (2) Survey of tribal and allottee lands. BLM contracts out some its activities in the management of public lands. These and other activities, dependent upon availability of funds, the need for specific services, or the Self-Governance tribe demonstrating a special geographic, cultural, or historical connection, may be available for inclusion in agreements. Once a tribe has made initial contact with BLM, more specific information will be provided by the respective BLM State office.

Tribal Services

1. *Cadastral Survey.* Tribal and allottee cadastral survey services are already available for contracts under Title I of the Act and therefore may be available for inclusion in an annual funding agreement.

2. *Minerals Management.* Inspection and enforcement of Indian oil and gas operations, inspection, enforcement and production verification of Indian coal and sand and gravel operations: these activities are already available for contracts under Title I of the Act and therefore may be available for inclusion in an annual funding agreement.

Other Activities

1. *Cultural Heritage.* Cultural heritage activities, such and research and inventory, may be available in specific States.

2. *Forestry Management.* Activities, such as environmental studies, tree planting, thinning and similar work, may be available in specific States.

3. *Range Management.* Activities, such as re-vegetation, noxious weed control, fencing, and similar activities, may be available in specific States.

4. *Riparian Management.* Activities, such as facilities construction, erosion control, rehabilitation, and similar activities, may be available in specific States.

5. *Recreation Management.* Activities, such as facilities construction and maintenance, interpretive design and construction, and similar activities, may be available in specific States.

6. *Wildlife and Fisheries Habitat Management.* Activities, such as construction and maintenance, interpretive design and construction, and similar activities, may be available in specific States.

The above programs under ''Other Activities'' are available in many states for competitive contracting. However, if they are of special geographic, historical or cultural significance to a participating Self-Governance tribe, they may be available for annual funding agreements. Tribes may also discuss additional BLM-funded activities with the relevant State office.

For questions regarding Indian Self-Governance, contact the BLM Self-Governance Coordinator, Dr. Marilyn Nickels, Washington Office, 1849 C Street, NW, Washington, D.C. 20240, (202) 452–0330, fax: (202) 452–7701. General information on all contracts available in a given year through the BLM can be obtained from the BLM National Business Center, P.O. Box 25047, Bldg 50, Denver Federal Center, Denver, CO 80225–0047.

B. Eligible Programs of the Bureau of Reclamation

Reclamation operates a wide range of water resource management projects for hydroelectric power generation, municipal and industrial water supplies, flood control, outdoor recreation, enhancement of fish and wildlife habitats, and research. Most of Reclamation's activities involve construction, operations and maintenance, and management of water resources projects and associated facilities. Components of the following FY99 water resource management and construction projects may be eligible for self-governance agreements.

1. Klamath Project—CA, OR
2. Newlands Project—NV, CA
3. Yakima River Basin Water Enhancement Program, WA
4. Trinity River Restoration Program—CA
5. Central Valley Project (Trinity Division)—CA
6. Central Arizona Project—AZ, CA, NM, UT
7. Colorado River Front Work/Levee System—AZ, CA, NV
8. Lower Colorado Indian Water Management Study—AZ, CA, NV
9. Middle Rio Grande Project—NM
10. Washoe Project—NV, CA
11. Yuma Area Projects—AZ, CA, NV
12. Indian Water Rights Settlement Projects—as Congressionally authorized.

Reclamation's initial point of contact for questions regarding Self-Governance is Dr. Barbara McDowell, Native American Affairs Office, Bureau of Reclamation (W–6100), 1849 C Street NW, Washington, D.C. 20240–0001, telephone (202) 208–4733.

C. Eligible Programs of the Fish and Wildlife Service (FWS)

The mission of FWS is to conserve, protect, and enhance fish, wildlife, and their habitats for the continuing benefit of the American people. Primary responsibilities are for migratory birds, endangered species, freshwater and anadromous fisheries, and certain marine mammals. FWS has a continuing cooperative relationship with a number of Indian tribes throughout the National Wildlife Refuge System and the Service's fish hatcheries.

FWS will also discuss participation in any program with any Indian tribe, self-governance or non-self-governance. Any self-governance tribe, however, may contact a national wildlife refuge or national fish hatchery directly concerning participation in Service programs under the Self-Governance Act.

Some elements of the following programs may be eligible for contracting under a self-governance annual funding agreement. The listing below was developed considering the proximity of an identified self-governance tribe to a national wildlife refuge or national fish hatchery, and the types of programs that have components that may be suitable for contracting through a self-governance annual funding agreement. This listing is not all-inclusive but is representative of the types of programs which may be eligible for tribal participation through an annual funding agreement.

1. Subsistence Programs within Alaska.

2. Fish & Wildlife Technical Assistance, Restoration & Conservation
- a. Fish & wildlife population surveys
- b. Habitat surveys
- c. Sport fish restoration
- d. Capture of depredating migratory birds
- e. Fish & wildlife program planning
- f. Habitat restoration activities

3. Endangered Species Program
- a. Cooperative management of conservation programs
- b. Development and implementation of recovery plans
- c. Conducting status surveys for high priority candidate species

d. Participation in the development of habitat conservation plans, as appropriate

4. Education Programs
a. Interpretation
b. Outdoor classrooms
c. Visitor center operations
d. Volunteer coordination efforts on- and off-refuge

5. Environmental Contaminants Program
a. Analytical devices
b. Removal of underground storage tanks
c. Specific cleanup activities
d. Natural resource economic analysis
e. Specific field data gathering efforts

6. Hatchery Operations
a. Egg taking
b. Rearing/feeding
c. Disease treatment
d. Tagging
e. Clerical/facility maintenance

7. Wetland & Habitat Conservation and Restoration
a. Construction
b. Planning activities
c. Habitat monitoring and management

8. Conservation Law Enforcement
a. All law enforcement efforts under cross-deputization

9. National Wildlife Refuge Operations & Maintenance
a. Construction
b. Farming
c. Concessions
d. Maintenance
e. Comprehensive management planning
f. Biological program efforts
g. Habitat management
h. Fire Management

Locations of Wildlife Refuges With Close Proximity to Indian Tribes

1. Humboldt Bay National Wildlife Refuge—CA
2. Kootenai National Wildlife Refuge—ID
3. Agassiz National Wildlife Refuge—MN
4. Rice Lake National Wildlife Refuge—MN
5. Mille Lacs National Wildlife Refuge—MN
6. Pablo National Wildlife Refuge—MT
7. Ninepipe National Wildlife Refuge—MT
8. National Bison Range—MT
9. Sequoyah National Wildlife Refuge—OK
10. Tishomingo National Wildlife Refuge—OK
11. Bandon Marsh National Wildlife Refuge—OR
12. San Juan Islands National Wildlife Refuge—WA
13. Dungeness National Wildlife Refuge—WA
14. Nisqually National Wildlife Refuge—WA
15. Alaska National Wildlife Refuges—AK
16. Mescalero National Fish Hatchery—NM
17. Alchesay National Fish Hatchery—AZ
18. Quinault National Fish Hatchery—WA
19. Makah National Fish Hatchery—WA

For questions regarding self-governance contact Duncan Brown, Native American Liaison, Fish and Wildlife Service (MS3012), 1849 C Street NW, Washington, D.C. 20240–0001, (202) 208–4133, fax: (202) 208–7407.

D. Eligible Programs of the Minerals Management Service (MMS)

MMS provides responsible stewardship of America's offshore resources and collects revenues generated from mineral leases on Federal and Indian lands. MMS is responsible for the management of the Federal Outer Continental Shelf, which are submerged lands off the coasts that have significant energy and mineral resources. MMS also offers mineral-owning tribes other opportunities to become involved in MMS's Royalty Management Program functions. These programs address the intent of Indian self-governance but are available regardless of self-governance intentions or status and are a good prerequisite for assuming other technical functions.

Within the offshore minerals management program, environmental impact assessments and statements, and environmental studies, may be available if a self-governance tribe demonstrates a special geographic, cultural, or historical connection. Generally, royalty management programs are available to tribes because of their status as Indians. Royalty management programs that may be available to self-governance tribes are as follows.

1. *Audit of tribal royalty payments.* Audit activities for tribal leases, except for the issuance of orders, final valuation decisions, and other enforcement activities. (For tribes already participating in MMS delegated audits, this program is offered as an optional alternative.)

2. *Verification of tribal royalty payments.* Financial compliance verification and monitoring activities, production verification, and appeals research and analysis.

3. *Tribal royalty reporting, accounting and data management.* Establishment and management of royalty reporting and accounting systems including document processing, production reporting, reference data (lease, payor, agreement) management, billing and general ledger.

4. *Tribal royalty valuation.* Preliminary analysis and recommendations for valuation and allowance determinations and approvals.

5. *Royalty Management of Allottee Leases.* Royalty management of allottee leases

6. *Online monitoring of royalties and accounts.* Online computer access to reports, payments, and royalty information contained in MMS accounts. MMS will install equipment at tribal locations, train tribal staff, and assist tribe in researching and monitoring all payments, reports, accounts, and historical information regarding their leases.

7. *Royalty Internship Program.* A new orientation and training program for auditors and accountants from mineral producing tribes to acquaint tribal staff with royalty laws, procedures, and techniques. This program is recommended for tribes that are considering a self-governance agreement but have not yet acquired mineral revenue expertise via a FOGRMA section 202 contract.

For questions regarding self-governance contact Joan Killgore, Royalty Liaison Office, Minerals Management Service, 1849 C Street NW, Room 4241, Washington, D.C. 20240–0001, (202) 208–3512, fax (202) 208–3982.

E. Eligible Programs of the National Park Service (NPS)

The National Park Service administers the National Park System made up of national parks, monuments, historic sites, battlefields, seashores, lake shores and recreation areas. NPS maintains the park units, protects the natural and cultural resources, and conducts a range of visitor services such as law enforcement, interpretation of geology, history, and natural and cultural resources. Some elements of these programs may be eligible for contracting under a self-governance annual funding agreement. The following list was developed considering the geographic proximity to, and/or traditional association of a self-governance tribe with, units of the National Park system, and the types of programs that have components that may be suitable for contracting through a self-governance annual funding agreement.

1. *Programs otherwise available (ongoing programs and activities).* Components of the programs on the following list are potentially eligible for inclusion in a self-governance annual funding agreement. Programs may be available within units of the National Park System.

a. Archeological surveys
b. Comprehensive management planning
c. Cultural resource management projects
d. Ethnographic studies
e. Erosion control
f. Fire protection
g. Hazardous fuel reduction
h. Housing construction and rehabilitation
i. Gathering baseline subsistence data—AK
j. Janitorial services

k. Maintenance
l. Natural resource management projects
m. Range assessment—AK
n. Reindeer grazing—AK
o. Road repair
p. Solid waste collection and disposal
q. Trail rehabilitation

2. *Programs having a potential tribal connection (special programs).* Aspects of these programs may be available if a self-governance tribe demonstrates a geographical, cultural, or historical connection.

a. Beringia Research
b. Elwha River Restoration

3. *Locations of Programs.* Aspects of the ongoing programs and activities may be available at the park units with known geographic, cultural, or historical connections with a self-governance tribe.

a. Lake Clark National Park and Preserve—AK
b. Katmai National Park and Preserve—AK
c. Glacier Bay National Park and Preserve—AK
d. Sitka National Historical Park—AK
e. Kenai Fjords National Park—AK
f. Wrangell-St. Elias National Park & Preserve—AK
g. Bering Land Bridge National Park—AK
h. Northwest Alaska Areas—AK
i. Gates of the Arctic National Park & Preserve—AK
j. Yukon Charlie Rivers National Preserve—AK
k. Casa Grande Ruins National Monument—AZ
l. Joshua Tree National Park—CA
m. Redwoods National Park—CA
n. Whiskeytown National Recreation Area—CA
o. Hagerman Fossil Beds National Monument—ID
p. Sleeping Bear Dunes National Lakeshore—MI
q. Voyageurs National Park—MI
r. Grand Portage National Monument—MN
s. Bear Paw Battlefield, Nez Perce National Historical Park—MT
t. Glacier National Park—MT
u. Great Basin National Park—NV
v. Bandelier National Monument—NM
w. Hopewell Culture National Historical Park—OK
x. Chickasaw National Recreation Area—OK
y. Effigy Mounds National Monument—IA
z. Olympic National Park—WA
a–1. San Juan Islands National Historic Park—WA
b–1. Mt. Rainier National Park—WA
c–1. Ebey's Landing National Historical Reserve—WA

While NPS has tried to indicate the types of programs that may be available, this is not intended to be an all-inclusive listing. NPS will also discuss participation in any program with any Indian tribe, self-governance or non-self-governance.

For questions regarding self-governance contact Dr. Patricia Parker, American Indian Liaison Office, National Park Service (2205), P.O. Box 37127, Washington, D.C. 20013–7127; telephone (202) 208–5475, fax (202) 273–0870.

F. Eligible Programs of the Office of Surface Mining (OSM)

OSM regulates surface coal mining and reclamation operations, and reclaims abandoned coal mines, in cooperation with States and Indian tribes.

1. *Abandoned Mine Land Reclamation Program.* This program to restore eligible lands mined and abandoned or left inadequately restored is available to Indian tribes.

2. *Control of the Environmental Impacts of Surface Coal Mining.* This program includes analyses, NEPA documentation, technical reviews, and studies. Where surface coal mining exists on Indian land, certain regulatory activities that are not inherently Federal, including, for example, designation of areas unsuitable for mining, are available to Indian tribes.

For questions regarding self-governance contact Maria Mitchell, Office of Surface Mining Reclamation and Enforcement, 1951 Constitution Ave. NW, (MS–210–SIB), Washington, D.C. 20240, telephone (202) 208–2865, fax (202) 291–3111.

G. Eligible Programs of the U.S. Geological Survey (USGS)

The mission of the U.S. Geological Survey is to provide information on biology, geology, hydrology, and cartography that contributes to the wise management of the nation's natural resources and to the health, safety, and well-being of the American people. Information includes maps, data bases, and descriptions and analyses of the water, plants, animals, energy, and mineral resources, land surface, underlying geologic structure and dynamic processes of the earth. Information on these scientific issues is developed through extensive research, field studies, and comprehensive data collection to: evaluate natural hazards such as earthquakes, volcanoes, landslides, floods, droughts, subsidence and other ground failures; assess energy, mineral, and water resources in terms of their quality, quantity, and availability; evaluate the habitats of animals and plants; and produce geographic, cartographic, and remotely-sensed information in digital and non-digital formats. No USGS programs are specifically available to American Indians or Alaska Natives. Components of programs may have a special geographic, cultural, or historical connection with a tribe.

1. *Mineral, Environmental, and Energy Assessments.* Components of this program that involve geologic research, data acquisition, and predictive modeling may be available for inclusion in an annual funding agreement.

2. *USGS Earthquake Hazards Reduction Program.* Components of this program that involves research, data acquisition, and modeling related to earthquakes and seismically active areas may be available for inclusion in an annual funding agreement.

3. *Water Resources Data Collection and Investigations.* Components of this program may be available for inclusion in an annual funding agreement if a self-governance tribe demonstrates a special geographic, cultural, or historical connection.

4. *Biological Resources Inventory, Monitoring, Research and Information Transfer Activities.* Components of this program may be available for inclusion in an annual funding agreement if a self-governance tribe demonstrates a special geographic, cultural or historical connection.

For questions regarding self-governance contact Sue Marcus, American Indian/Alaska Native Liaison, U.S. Geological Survey, 105 National Center, Reston, VA 20192, telephone (703) 648–4437, fax (703) 648–5068.

IV. Programmatic Targets

During Fiscal Year 2000, upon request each non-BIA bureau will negotiate Self Governance annual funding agreements for its eligible programs beyond those already negotiated.

Dated: February 25, 1999.

Juliette A. Falkner,

Special Assistant to the Secretary.

[FR Doc. 99–5556 Filed 3–5–99; 8:45 am]

BILLING CODE 4310–10–P

DEPARTMENT OF THE INTERIOR

Fish and Wildlife Service

Availability of Draft Recovery Plan for Gabbro Soil Plants of the Central Sierra Nevada Foothills for Review and Comment

AGENCY: U.S. Fish and Wildlife Service, Interior.

ACTION: Notice of document availability.

SUMMARY: The U.S. Fish and Wildlife Service (Service) announces the availability for public review of the Draft Recovery Plan for Gabbro Soil Plants of the Central Sierra Nevada

Foothills. This recovery plan includes six plant species, of which five species are federally listed as endangered or threatened. The draft plan includes recovery criteria and measures for the plants—Stebbin's morning-glory (*Calystegia stebbensii*), Pine Hill ceanothus (*Ceanothus roderickii*), Pine Hill flannelbush (*Fremontodendron californicum* ssp. *decumbens*), El Dorado bedstraw (*Galium californicum* ssp. *sierrae*), and Layne's butterweed (*Senecio layneae*), and an additional species of plan, El Dorado mule-ears (*Wyethia reticulata*), that is considered to be a species of concern.

DATES: Comments on the draft recovery plan must be received on or before June 7, 1999.

ADDRESSES: Copies of the draft recovery plan are available for inspection, by appointment, during normal business hours at the following location: U.S. Fish and Wildlife Service, Sacramento Fish and Wildlife Office, 3310 El Camino Avenue, Suite 130, Sacramento, California (telephone (916) 979–2710); and U.S. Fish and Wildlife Service, Regional Office, Ecological Services, 911 N.E. 11th Ave., Eastside Federal Complex, Portland Oregon 97232–4181 (telephone (503) 231–6131). Requests for copies of the draft recovery plan and written comments and materials regarding this plan should be addressed to Wayne S. White, Field Supervisor, Ecological Services, at the above Sacramento address.

FOR FURTHER INFORMATION CONTACT: Karen Miller, Fish and Wildlife Biologist, at the above Sacramento address.

SUPPLEMENTARY INFORMATION:

Background

Restoring endangered or threatened animals and plants to the point where they are again secure, self-sustaining members of their ecosystems is a primary goal of the Service's endangered species program. To help guide the recovery effort, the Service is working to prepare recovery plans for most of the listed species native to the United States. Recovery plans describe actions considered necessary for the conservation of the species, establish criteria for downlisting or delisting listed species, and estimate time and cost for implementing the recovery measures needed.

The Endangered Species Act of 1973, as amended (16 U.S.C. 1531 *et seq.*) (Act), requires the development of recovery plans for listed species unless such a plan would not promote the conservation of a particular species. Section 4(f) of the Act as amended in 1988 requires that public notice and an opportunity for public review and comment be provided during recovery plan development. The Service will consider all information presented during the public comment period prior to approval of each new or revised recovery plan. Substantive technical comments will result in changes to the plan. Substantive comments regarding recovery plan implementation may not necessarily result in changes to the recovery plan, but will be forwarded to appropriate Federal or other entities so that they can take these comments into account during the course of implementing recovery actions. Individualized responses to comments will not be provided.

The six species of plants covered in the draft recovery plan are primarily restricted to gabbro soils habitat in the central Sierra Nevada foothills of California. Conversion of habitat to urban uses has extirpated the listed species and species of concern from a significant portion of their historic ranges. The remaining natural communities are highly fragmented, and many are marginal habitats in which these species may not persist during catastrophic events.

The objectives of this recovery plan are two-fold: (1) to delist the plants Stebbin's morning-glory, Pine Hill ceanothus, Pine Hill flannelbush, El Dorado bedstraw, and Layne's butterweed by protecting, enhancing, restoring, and appropriately managing their habitat; and (2) to ensure the long-term conservation of the one species of concern, El Dorado mule-ears, that occurs in the same gabbro soils habitats with the listed species.

Public Comments Solicited

The Service solicits written comments on the recovery plan described. All comments received by the date specified above will be considered prior to approval of this plan.

Authority: The authority for this action is section 4(f) of the Endangered Species Act, 16 U.S.C. 1533(f).

Dated: March 2, 1999.

Michael J. Spear,

Manager, California/Nevada Operations Office.

[FR Doc. 99–5560 Filed 3–5–99; 8:45 am]

BILLING CODE 4310–55–P

DEPARTMENT OF THE INTERIOR

Bureau of Land Management

[OR–035–1220]

Emergency Closure and Restriction on Public Lands in the South Fork of the Walla Walla River Area of Critical Environmental Concern (ACEC)

January 12, 1999.

AGENCY: Bureau of Land Management, Vale District Office, Baker Resource Area, DOI.

ACTION: Notice of Closure and Restriction on Public Lands for the protection of resource values identified in South Fork of the Walla Walla River Area Plan Amendment, February 1992, for public safety, and subsequent listing of the Bull Trout as a federally threatened and endangered fish and proposed listing of the Mid-Columbia River Summer Steelhead.

SUMMARY: Pursuant to the regulations contained in the Title 43 CFR 8364, the Bureau of Land Management is limiting motorized vehicle travel within the ACEC. Motorcycles will continue to be allowed on the South Fork of the Walla Walla trail. Motorized vehicles will also continue to be allowed at the trailhead parking area and access road. All other motorized vehicle use is prohibited within the ACEC. The ACEC is closed to overnight camping. Discharging firearms within the road corridor between the cattleguard west of the trailhead parking area and the trail head gate is prohibited.

These closure and restriction orders will be in effect on approximately 1,955 acres of public land within the South Fork of the Walla Walla River corridor. These limitations are located within the South Fork of the Walla Walla River ACEC in Umatilla County, Oregon in the western foothills of the Blue Mountains, Township 4N., Range 37E, sec. 1, 2, 10, 11, 12, 13, 14, 15, Range 38E, sec. 6 and 7, Willamette Meridian. A map of the area described above may be viewed in the Baker Resource Area Office.

The limitations are necessary to prevent deterioration of the area's resource values including soil and water resources and habitat for Threatened and Endangered fish. The limitations will also provide for public safety and will be consistent with U.S. Forest Service regulations for the trail right-of-way connecting to Umatilla National Forest lands to the east of the ACEC.

Personnel that are exempt from the area limitations include any Federal, State, or local officer, or member of any organized rescue or fire-fighting force in the performance of an official duty, or

any person authorized in writing, in advance by the Bureau of Land Management, Baker Resource Area Manager.

This replaces and rescinds all previous closures including the Emergency Closure and Restriction on Public Lands in the South Fork of the Walla Walla River Area of Critical Environmental Concern (ACEC) dated September 28, 1994.

DATES: The closures and restrictions are in effect immediately and shall remain in effect until rescinded by the authorized officer.

Penalties: Violators are subject to imprisonment for not more than 12 months, or a fine in accordance with the applicable provisions of Title 18 U.S.C. 3571, or both.

FOR FURTHER INFORMATION CONTACT: Penny Dunn-Woods, Baker Resource Area Manager, Baker City, OR 97814, Telephone 541–523–1256.

Ed Singleton,

District Manager.

[FR Doc. 99–5317 Filed 3–5–99; 8:45 am]

BILLING CODE 4310–33–M

DEPARTMENT OF THE INTERIOR

Bureau of Land Management

[MT–921–09–1320–01; MTM 80697]

Notice of Hearing

SUMMARY: Notice is hereby given that a public hearing will be held at 10:00 a.m., Wednesday, March 31, 1999, in the conference room on the Sixth Floor of the Granite Tower Building, Bureau of Land Management, 222 North 32nd Street, Billings, Montana 59107.

Western Energy Company has requested the Bureau of Land Management to re-schedule a coal lease sale for Coal Lease Application MTM 80697. Western Energy Company submitted an amended coal lease application on July 16, 1998, that reduced the lease application acreage from 2,061 acres to 1,401 acres.

Pursuant to regulations at 43 CFR 3425.4 (a)(1), the Bureau of Land Management requests additional public comments on the Final Environmental Impact Statement dated September 9, 1994, fair market value, and maximum economic recovery of certain coal resources it proposes to re-offer for a competitive lease sale. A Decision Record dated May 15, 1995, and an Administrative Determination dated November 13, 1998, allow for coal leasing.

The lands included in Coal Lease Application MTM 80697, as amended, are located approximately 10 miles west of the town of Colstrip, Montana, in Rosebud County, Montana, and are described as follows:

T. 1 N., R. 39 E., P.M.M.
Sec. 2: N½S½NW¼
T. 1 N., R. 40 E., P.M.M.
Sec. 6: Lots 1, 2, 3, 4, S½N½, N½S½, N½SW¼SE¼, SE¼SE¼
Sec. 8: NE¼NE¼, N½NW¼NE¼, SE¼NW¼NE¼, N½N½NW¼
Sec. 14: S½SW¼, N½NE¼SE¼, W½SE¼
T. 2 N., R. 40 E., P.M.M.
Sec. 32: NE¼, E½NE¼NW¼, SW¼NE¼NW¼, S½SW¼NW¼, SE¼NW¼, N½S½, SW¼SW¼, N½SE¼SW¼, N½SW¼SE¼

The 1,401-acre tract contains an estimated 27.6 million tons of recoverable coal reserves.

The amended application will be processed in accordance with the provisions of the Mineral Leasing Act of 1920, as amended (30 U.S.C. 181, *et seq.*) and the implementing regulations at 43 CFR 3400.

FOR FURTHER INFORMATION CONTACT: Rebecca Good, Coal Coordinator (telephone 406–255–2828), Bureau of Land Management, Montana State Office, 222 North 32nd Street, P.O. Box 36800, Billings, Montana 59107–6800.

Dated: March 2, 1999.

Randy D. Heuscher,

Chief, Branch of Solid Minerals

[FR Doc. 99–5563 Filed 3–5–99; 8:45 am]

BILLING CODE 4310–DN–P

DEPARTMENT OF THE INTERIOR

Bureau of Land Management

[AZ–910–0777–61–241A]

State of Arizona Resource Advisory Council Meeting

AGENCY: Bureau of Land Management, Interior.

ACTION: Arizona Resource Advisory Council Meeting, notice of meeting.

SUMMARY: This notice announces a meeting of the Arizona Resource Advisory Council.

The meeting will be held April 9, 1999 in Safford, Arizona. The one-day meeting will begin at 8:30 a.m. and conclude at approximately 3:00 p.m. It will be held at the Ramada Inn located on 420 E. Highway 70, Safford, Arizona. The agenda items to be covered at the meeting include review of previous meeting minutes; BLM State Director's update on legislation, regulations and statewide planning efforts; Presentations on Eco-Tourism and Gateway Communities, and the Cerbat Horse Herd Report and Analysis; Updates on proposed National Monument on the AZ Strip, and the proposed Las Cienegas National Conservation Area; Proposed Field Office Rangeland Resource Teams; and Reports by the Standards and Guidelines, Recreation and Public Relations, Wild Horse and Burro Working Groups; Reports from BLM Field Office Managers; Reports from RAC members; and Discussion on future meetings. A public comment period will be provided at 11:30 a.m. on April 9, 1999, for any interested publics who wish to address the Council. For Further Information Contract: Deborah Stevens, Bureau of Land Management, Arizona State Office, 222 North Central Avenue, Phoenix, Arizona 85004–2203, (602) 417–9215.

Joanie Losacco,

Acting Arizona State Director.

[FR Doc. 99–5561 Filed 3–5–99; 8:45 am]

BILLING CODE 4310–32–M

DEPARTMENT OF THE INTERIOR

Bureau of Land Management

[OR–130–1020–00; GP9–0128]

Notice of Meeting of the Eastern Washington Resource Advisory Council

AGENCY: Bureau of Land Management, Spokane District, DOI.

NOTICE: Notice of Meeting of the Eastern Washington Resource Advisory Council.

ACTION: Meeting of the Eastern Washington Resource Advisory Council; March 18, 1999, in Spokane, Washington.

SUMMARY: A meeting of the Eastern Washington Resource Advisory Council will be held on March 18, 1999. The meeting will convene at 9:00 a.m., at the Spokane District Office of the Bureau of Land Management, 1103 N. Fancher, Spokane, Washington, 99212–1275. The meeting will adjourn upon conclusion of business, but no later than 4:30 p.m.. Public comments will be heard from 10:00 a.m. until 10:30 a.m.. If necessary to accommodate all wishing to make public comments, a time limit may be placed upon each speaker. At an appropriate time, the meeting will adjourn for approximately one hour for lunch. Topics to be discussed include: Recreation, Wildlife and Range.

FOR FURTHER INFORMATION CONTACT: Clifford D. Ligons, Bureau of Land Management, Spokane District Office, 1103 N. Fancher Road, Spokane, Washington, 99212–1275; or call 509–536–1200.

Dated: March 2, 1999.

Joseph K. Buesing,

District Manager.

[FR Doc. 99–5562 Filed 3–5–99; 8:45 am]

BILLING CODE 4310–33–P

DEPARTMENT OF THE INTERIOR

National Park Service

Finding of No Significant Impact and Environmental Assessment of Proposed Wireless Telecommunications Facilities, Maintenance Yard & Tennis Center Rock Creek Park, Washington, D.C.

ACTION: Notice of the availability of a Finding of No Significant Impact (FONSI) and an Environmental Assessment (EA) for proposed wireless telecommunications facilities in Rock Creek Park, Washington, D.C.

SUMMARY: Pursuant to the Council of Environmental Quality regulations and National Park Service policy, NPS has completed a FONSI and an EA which have evaluated the potential impacts of two monopole-mounted antennas and supporting infrastructure proposed to be located in Rock Creek Park to provide acceptable wireless telecommunication coverage within Rock Creek Park south of Military Road. The NPS has determined that the implementation of the preferred alternatives at the tennis center and the maintenance yard will cause no derogation of park resources and would not constitute a major Federal action that would have significant impact on the quality of the human environment within the meaning of Section 102(2c) of the National Environmental Policy Act of 1969. Accordingly, the preparation of an Environmental Impact Statement is not required. The NPS is making the FONSI and EA available for public review. The NPS will take no final action on these wireless telecommunications facilities until the comments from the public have been considered.

DATES: There will be a 30-day public review period for comment on this document. Comments on the FONSI and EA should be received no later than March 31, 1999. Additionally, the NPS will hold a public meeting on March 24, 1999, to receive public comment on this issue. The meeting will be held at the Rock Creek Nature Center, 5200 Glover Road, Washington, D.C. at 7 p.m.

ADDRESSES: Comment on the FONSI and EA should be submitted to: Ms. Adrienne Coleman, Superintendent, Rock Creek Park, 3545 Williamsburg Lane, NW., Washington, D.C. 20008. Public reading copies of the FONSI and EA will be available for review at Rock Creek Park Headquarters, 3545 Williamsburg Lane, NW., and at the Rock Creek Park web page at www.nps.gov/rocr.

FOR FURTHER INFORMATION CONTACT: Superintendent Adrienne Coleman, Rock Creek Park, 3545 Williamsburg Lane, NW., Washington, D.C. 20008, Telephone: (202) 282–1063.

SUPPLEMENTARY INFORMATION: The Congress and the President have established a Federal interest in promoting the efficient implementation of new telecommunications policy. The NPS is concerned about the safety of visitors to its parks and will consider public safety as a factor when reviewing telecommunications antenna proposals. The NPS will cooperate with such proposals to enhance visitor safety as long as those proposals do not result in a derogation of park resources or conflict with the current or planned use of park property.

On May 26, 1998, Bell Atlantic Mobile submitted two completed applications for installation of wireless telecommunications facilities in Rock Creek Park, Washington, D.C. The proposed facility sites are the Fitzgerald Tennis Stadium and the park's maintenance yard. This EA analyzed the overall impacts of both proposed facilities on the resources of Rock Creek Park because the sites are engineered to operate interdependently. Due to steep topography and forest cover on both sides of the valley, antennas on both sides of the valley are necessary to achieve acceptable wireless telecommunications coverage since one site is not capable of providing the level of communications coverage necessary for enhanced telephonic access to emergency law enforcement and public safety services within the Rock Creek valley south of Military Road.

This EA analyzed two alternative sites for locating a wireless communications facility at the tennis center and four alternatives for a facility at the maintenance yard. It examined their physical and visual impact on park resources, operations, and visitor services, including mitigation of any potential impacts. Additionally, this EA addressed whether these wireless telecommunications facilities would enhance public safety.

The NPS published a notice in the **Federal Register** on May 26, 1998, inviting public comment on the Bell Atlantic Mobile applications and as a result received over 40 comments on the proposed wireless telecommunications facilities.

Dated: March 2, 1999.

Terry R. Garlstrom,

Regional Director, National Capital Region.

[FR Doc. 99–5554 Filed 3–5–99; 8:45 am]

BILLING CODE 4310–70–M

DEPARTMENT OF THE INTERIOR

Bureau of Reclamation

Bay-Delta Advisory Council Meeting; Bay-Delta Advisory Council's Ecosystem Roundtable Meeting

AGENCY: Bureau of Reclamation, Interior.

ACTION: Notice of meetings.

SUMMARY: The Bay-Delta Advisory Council (BDAC) will meet to discuss key issues in the southern San Joaquin Valley and to begin addressing key CALFED critical issues, focusing on the Water Management Strategy, Governance and Stage I actions. There will also be a farm and groundwater banking site tour that the public is invited to participate.

The Bay-Delta Advisory Council's (BDAC) Ecosystem Roundtable will meet on March 16, 1999, to discuss several issues including: the project selection process for the February 1999 proposal solicitation package, administrative costs, funding coordination, an implementation and tracking system update, and other issues. These meetings are open to the public. Interested persons may make oral statements to the BDAC and Ecosystem Roundtable or may file written statements for consideration.

DATES: The Bay-Delta Advisory Council will tour farms and groundwater banking sites on Wednesday, March 24, 1999. The tour will begin at 1:30 p.m from the Arvin-Edison Water District, 20401 Bear Mountain Boulevard, Arvin. BDAC will meet from 8:30 a.m.–5 p.m. on Thursday, March 25, 1999 at the Holiday Inn Select, 801 Truxtun Avenue, Bakersfield. The Bay-Delta Advisory Council's Ecosystem Roundtable meeting will be held from 9:30 a.m. to 12 p.m. on Tuesday, March 16, 1999.

ADDRESSES: The Bay-Delta Advisory Council will meet at the Holiday Inn Select, 801 Truxtun Avenue, Bakersfield, CA 93301. The Ecosystem Roundtable will meet at the Energy Commission Building, Hearing Room A, at 1516 Ninth Street, Sacramento, CA 95814.

FOR FURTHER INFORMATION CONTACT: For the Bay-Delta Advisory Council Meeting, Eugenia Laychak, CALFED Bay-Delta Program, at (916) 657–2666.

For the Ecosystem Roundtable, Wendy Halverson Martin, CALFED Bay-Delta Program, at (916) 657–2666. If reasonable accommodation is needed due to a disability, please contact the Equal Employment Opportunity Office at (916) 653–6952 or TDD (916) 653–6934 at least one week prior to the meeting.

SUPPLEMENTARY INFORMATION: The San Francisco Bay/Sacramento-San Joaquin Delta Estuary (Bay-Delta system) is a critically important part of California's natural environment and economy. In recognition of the serious problems facing the region and the complex resource management decisions that must be made, the state of California and the Federal government are working together to stabilize, protect, restore, and enhance the Bay-Delta system. The State and Federal agencies with management and regulatory responsibilities in the Bay-Delta system are working together as CALFED to provide policy direction and oversight for the process.

One area of Bay-Delta management includes the establishment of a joint State-Federal process to develop long-term solutions to problems in the Bay-Delta system related to fish and wildlife, water supply reliability, natural disasters, and water quality. The intent is to develop a comprehensive and balanced plan which addresses all of the resource problems. This effort, the CALFED Bay-Delta Program (Program), is being carried out under the policy direction of CALFED. The Program is exploring and developing a long-term solution for a cooperative planning process that will determine the most appropriate strategy and actions necessary to improve water quality, restore health to the Bay-Delta ecosystem, provide for a variety of beneficial uses, and minimize Bay-Delta system vulnerability. A group of citizen advisors representing California's agricultural, environmental, urban, business, fishing, and other interests who have a stake in finding long-term solutions for the problems affecting the Bay-Delta system. This group, known as the Bay-Delta Advisory Council (BDAC), has been chartered under the Federal Advisory Committee (FACA). The BDAC provides advice to CALFED on the program mission, problems to be addressed, and objectives for the Program. BDAC provides a forum to help ensure public participation, and will review reports and other materials prepared by CALFED staff. BDAC has established a subcommittee called the Ecosystem Roundtable to provide input on annual workplans to implement ecosystem restoration projects and programs.

Minutes of the meeting will be maintained by the Program, Suite 1155, 1416 Ninth Street, Sacramento, CA 95814, and will be available for public inspection during regular business hours, Monday through Friday within 30 days following the meeting.

Dated: March 1, 1999.

Rick L. Gold,

Acting Deputy Regional Director, Mid-Pacific Region.

[FR Doc. 99–5564 Filed 3–5–99; 8:45 am]

BILLING CODE 4310–94–M

INTERNATIONAL TRADE COMMISSION

Agency Form Submitted for OMB Review

AGENCY: United States International Trade Commission.

ACTION: In accordance with the provisions of the Paperwork Reduction Act of 1995 (44 U.S.C. Chapter 35), the Commission has submitted a request for approval of questionnaires to the Office of Management and Budget for review. The Commission has requested OMB approval of this submission by COB March 8, 1999.

EFFECTIVE DATE: March 2, 1999.

Purpose of Information Collection: The forms are for use by the Commission in connection with the ITC DataWeb Public Pilot Project. The ITC DataWeb provides on-line, rapid and customized retrieval of U.S. trade and tariff data and has been an Internet tool primarily for government users. The interagency International Trade Data System (ITDS) board chairman has requested that the ITC DataWeb be made formally available to the public. The purpose of the public pilot project is to assess the additional costs of making this service formally available to the general public and to evaluate benefits. The user registration forms are required to accurately track usage, data reports generated, and costs by user sectors. The forms would appear on the ITC DataWeb internet site (*http://dataweb.usitc.gov*) and would need to be filled out only once. The Commission expects to complete the pilot project by September 30, 1999.

Summary of Proposal

(1) Number of forms submitted: two.

(2) Title of form: ITC Tariff and Trade DataWeb Public Pilot Project: ''Create New User Account Form'' and ''User Information Form''.

(3) Type of request: new.

(4) Frequency of use: single data gathering.

(5) Description of respondents: Government and private sector users of the on-line ITC DataWeb.

(6) Estimated number of respondents: 2,000.

(7) Estimated total number of minutes to complete the forms: 2.0 minutes.

(8) Information obtained from the form that qualifies as confidential business information will be so treated by the Commission and not disclosed in a manner that would reveal the individual operations of a firm.

Additional Information or Comment: Copies of the forms and supporting documents may be obtained from Peg MacKnight (E-mail pmacknight@usitc.gov or telephone 202–205–3431). Comments about the proposals should be directed to the Office of Management and Budget, Office of Information and Regulatory Affairs, Room 10102 (Docket Library), Washington, DC 20503, ATTENTION: Docket Librarian. All comments should be specific, indicating which part of the questionnaire is objectionable, describing the concern in detail, and including specific suggested revisions or language changes. Copies of any comments should be provided to Robert Rogowsky, Director, Office of Operations, U.S. International Trade Commission, 500 E Street S.W., Washington, D.C. 20436, who is the Commission's designated Senior Official under the Paperwork Reduction Act.

Hearing impaired individuals are advised that information on this matter can be obtained by contacting our TDD terminal (telephone no. 202–205–1810). General information concerning the Commission may also be obtained by accessing its Internet server (http://www.usitc.gov).

Issued: March 3, 1999.

By order of the Commission.

Donna R. Koehnke,

Secretary.

[FR Doc. 99–5656 Filed 3–5–99; 8:45 am]

BILLING CODE 7020–02–P

INTERNATIONAL TRADE COMMISSION

[Investigations Nos. 303–TA–13 (Review); 701–TA–249 (Review); and 731–TA–262, 263 and 265 (Review)]

Iron Metal Castings From India; Heavy Iron Construction Castings From Brazil; and Iron Construction Castings From Brazil, Canada, and China

AGENCY: United States International Trade Commission.

ACTION: Scheduling of full five-year reviews concerning the countervailing duty orders on iron metal castings from India and heavy iron construction castings from Brazil and concerning the antidumping duty orders on iron construction castings from Brazil, Canada, and China.

SUMMARY: The Commission hereby gives notice of the scheduling of full reviews pursuant to section 751(c)(5) of the Tariff Act of 1930 (19 U.S.C. 1675(c)(5)) (the Act) to determine whether revocation of the countervailing duty orders on iron metal castings from India and heavy iron construction castings from Brazil and the antidumping duty orders on iron construction castings from Brazil, Canada, and China would be likely to lead to continuation or recurrence of material injury. For further information concerning the conduct of these reviews and rules of general application, consult the Commission's Rules of Practice and Procedure, part 201, subparts A through E (19 CFR part 201), and part 207, subparts A, D, E, and F (19 CFR part 207). Recent amendments to the Rules of Practice and Procedure pertinent to five-year reviews, including the text of subpart F of part 207, are published at 63 FR 30599, June 5, 1998, and may be downloaded from the Commission's World Wide Web site at http://www.usitc.gov/rules.htm.

EFFECTIVE DATE: February 4, 1999.

FOR FURTHER INFORMATION CONTACT: Brian R. Allen (202–708–4728), Office of Investigations, U.S. International Trade Commission, 500 E Street SW, Washington, DC 20436. Hearing-impaired persons can obtain information on this matter by contacting the Commission's TDD terminal on 202–205–1810. Persons with mobility impairments who will need special assistance in gaining access to the Commission should contact the Office of the Secretary at 202–205–2000. General information concerning the Commission may also be obtained by accessing its internet server (http://www.usitc.gov).

SUPPLEMENTARY INFORMATION:

Background

On February 4, 1999, the Commission determined that responses to its notice of institution of the subject five-year reviews were such that full reviews pursuant to section 751(c)(5) of the Act should proceed. A record of the Commissioners' votes, the Commission's statement on adequacy, and any individual Commissioner's statements will be available from the Office of the Secretary and at the Commission's web site.

Participation in the Reviews and Public Service List

Persons, including industrial users of the subject merchandise and, if the merchandise is sold at the retail level, representative consumer organizations, wishing to participate in these reviews as parties must file an entry of appearance with the Secretary to the Commission, as provided in section 201.11 of the Commission's rules, by 45 days after publication of this notice. A party that filed a notice of appearance following publication of the Commission's notice of institution of these reviews need not file an additional notice of appearance. The Secretary will maintain a public service list containing the names and addresses of all persons, or their representatives, who are parties to the reviews.

Limited Disclosure of Business Proprietary Information (BPI) Under an Administrative Protective Order (APO) and BPI Service List

Pursuant to section 207.7(a) of the Commission's rules, the Secretary will make BPI gathered in these reviews available to authorized applicants under the APO issued in the reviews, provided that the application is made by 45 days after publication of this notice. Authorized applicants must represent interested parties, as defined by 19 U.S.C. § 1677(9), who are parties to the reviews. A party granted access to BPI following publication of the Commission's notice of institution of the reviews need not reapply for such access. A separate service list will be maintained by the Secretary for those parties authorized to receive BPI under the APO.

Staff Report

The prehearing staff report in the reviews will be placed in the nonpublic record on July 12, 1999, and a public version will be issued thereafter, pursuant to section 207.64 of the Commission's rules.

Hearing

The Commission will hold a hearing in connection with the reviews beginning at 9:30 a.m. on August 5, 1999, at the U.S. International Trade Commission Building. Requests to appear at the hearing should be filed in writing with the Secretary to the Commission on or before July 26, 1999. A nonparty who has testimony that may aid the Commission's deliberations may request permission to present a short statement at the hearing. All parties and nonparties desiring to appear at the hearing and make oral presentations should attend a prehearing conference to be held at 9:30 a.m. on July 29, 1999, at the U.S. International Trade Commission Building. Oral testimony and written materials to be submitted at the public hearing are governed by sections 201.6(b)(2), 201.13(f), 207.24, and 207.66 of the Commission's rules. Parties must submit any request to present a portion of their hearing testimony *in camera* no later than 7 days prior to the date of the hearing.

Written Submissions

Each party to the reviews may submit a prehearing brief to the Commission. Prehearing briefs must conform with the provisions of section 207.65 of the Commission's rules; the deadline for filing is July 26, 1999. Parties may also file written testimony in connection with their presentation at the hearing, as provided in section 207.24 of the Commission's rules, and posthearing briefs, which must conform with the provisions of section 207.67 of the Commission's rules. The deadline for filing posthearing briefs is August 16, 1999; witness testimony must be filed no later than three days before the hearing. In addition, any person who has not entered an appearance as a party to the reviews may submit a written statement of information pertinent to the subject of the reviews on or before August 16, 1999. On October 6, 1999, the Commission will make available to parties all information on which they have not had an opportunity to comment. Parties may submit final comments on this information on or before October 8, 1999, but such final comments must not contain new factual information and must otherwise comply with section 207.68 of the Commission's rules. All written submissions must conform with the provisions of section 201.8 of the Commission's rules; any submissions that contain BPI must also conform with the requirements of sections 201.6, 207.3, and 207.7 of the Commission's rules. The Commission's rules do not authorize filing of submissions with the Secretary by facsimile or electronic means.

In accordance with sections 201.16(c) and 207.3 of the Commission's rules, each document filed by a party to the reviews must be served on all other parties to the reviews (as identified by either the public or BPI service list), and a certificate of service must be timely filed. The Secretary will not accept a document for filing without a certificate of service.

Authority: These reviews are being conducted under authority of title VII of the Tariff Act of 1930; this notice is published pursuant to section 207.62 of the Commission's rules.

Issued: March 3, 1999.

By order of the Commission.

Donna R. Koehnke,

Secretary.

[FR Doc. 99–5655 Filed 3–5–99; 8:45 am]

BILLING CODE 7020–02–P

INTERNATIONAL TRADE COMMISSION

[Investigations Nos. 731–TA–125–126 (Review)]

Potassium Permanganate From China and Spain

AGENCY: United States International Trade Commission.

ACTION: Scheduling of full five-year reviews concerning the antidumping duty orders on potassium permanganate from China and Spain.

SUMMARY: The Commission hereby gives notice of the scheduling of full reviews pursuant to section 751(c)(5) of the Tariff Act of 1930 (19 U.S.C. 1675(c)(5)) (the Act) to determine whether revocation of the antidumping duty orders on potassium permanganate from China and Spain would be likely to lead to continuation or recurrence of material injury. For further information concerning the conduct of these reviews and rules of general application, consult the Commission's Rules of Practice and Procedure, part 201, subparts A through E (19 CFR part 201), and part 207, subparts A, D, E, and F (19 CFR part 207). Recent amendments to the Rules of Practice and Procedure pertinent to five-year reviews, including the text of subpart F of part 207, are published at 63 FR 30599, June 5, 1998, and may be downloaded from the Commission's World Wide Web site at http://www.usitc.gov/rules.htm.

EFFECTIVE DATE: March 1, 1999.

FOR FURTHER INFORMATION CONTACT: Karen Taylor (202–708–4101), Office of Investigations, U.S. International Trade Commission, 500 E Street SW, Washington, DC 20436. Hearing-impaired persons can obtain information on this matter by contacting the Commission's TDD terminal on 202–205–1810. Persons with mobility impairments who will need special assistance in gaining access to the Commission should contact the Office of the Secretary at 202–205–2000. General information concerning the Commission may also be obtained by accessing its internet server (http://www.usitc.gov).

SUPPLEMENTARY INFORMATION:

Background

On February 4, 1999, the Commission determined that responses to its notice of institution of the subject five-year reviews were such that full reviews pursuant to section 751(c)(5) of the Act should proceed (64 FR 9177, February 24, 1999). A record of the Commissioners' votes and the Commission's statement on adequacy are available from the Office of the Secretary and at the Commission's web site.

Participation in the Reviews and Public Service List

Persons, including industrial users of the subject merchandise and, if the merchandise is sold at the retail level, representative consumer organizations, wishing to participate in these reviews as parties must file an entry of appearance with the Secretary to the Commission, as provided in section 201.11 of the Commission's rules, by 45 days after publication of this notice. A party that filed a notice of appearance following publication of the Commission's notice of institution of the reviews need not file an additional notice of appearance. The Secretary will maintain a public service list containing the names and addresses of all persons, or their representatives, who are parties to the reviews.

Limited Disclosure of Business Proprietary Information (BPI) Under an Administrative Protective Order (APO) and BPI Service List

Pursuant to section 207.7(a) of the Commission's rules, the Secretary will make BPI gathered in these reviews available to authorized applicants under the APO issued in the reviews, provided that the application is made by 45 days after publication of this notice. Authorized applicants must represent interested parties, as defined by 19 U.S.C. 1677(9), who are parties to the reviews. A party granted access to BPI following publication of the Commission's notice of institution of the reviews need not reapply for such access. A separate service list will be maintained by the Secretary for those parties authorized to receive BPI under the APO.

Staff Report

The prehearing staff report in the reviews will be placed in the nonpublic record on August 4, 1999, and a public version will be issued thereafter, pursuant to section 207.64 of the Commission's rules.

Hearing

The Commission will hold a hearing in connection with the reviews beginning at 9:30 a.m. on August 31, 1999, at the U.S. International Trade Commission Building. Requests to appear at the hearing should be filed in writing with the Secretary to the Commission on or before August 24, 1999. A nonparty who has testimony that may aid the Commission's deliberations may request permission to present a short statement at the hearing. All parties and nonparties desiring to appear at the hearing and make oral presentations should attend a prehearing conference to be held at 9:30 a.m. on August 26, 1999, at the U.S. International Trade Commission Building. Oral testimony and written materials to be submitted at the public hearing are governed by sections 201.6(b)(2), 201.13(f), 207.24, and 207.66 of the Commission's rules. Parties must submit any request to present a portion of their hearing testimony in *camera* no later than 7 days prior to the date of the hearing.

Written Submissions

Each party to the reviews may submit a prehearing brief to the Commission. Prehearing briefs must conform with the provisions of section 207.65 of the Commission's rules; the deadline for filing is August 20, 1999. Parties may also file written testimony in connection with their presentation at the hearing, as provided in section 207.24 of the Commission's rules, and posthearing briefs, which must conform with the provisions of section 207.67 of the Commission's rules. The deadline for filing posthearing briefs is September 9, 1999; witness testimony must be filed no later than three days before the hearing. In addition, any person who has not entered an appearance as a party to the reviews may submit a written statement of information pertinent to the subject of the reviews on or before September 9, 1999. On September 23, 1999, the Commission will make available to parties all information on which they have not had an opportunity to comment. Parties may submit final comments on this information on or before September 27, 1999, but such final comments must not contain new factual information and must otherwise comply with section 207.68 of the Commission's rules. All written submissions must conform with the provisions of section 201.8 of the Commission's rules; any submissions that contain BPI must also conform with

the requirements of sections 201.6, 207.3, and 207.7 of the Commission's rules. The Commission's rules do not authorize filing of submissions with the Secretary by facsimile or electronic means.

In accordance with sections 201.16(c) and 207.3 of the Commission's rules, each document filed by a party to the reviews must be served on all other parties to the reviews (as identified by either the public or BPI service list), and a certificate of service must be timely filed. The Secretary will not accept a document for filing without a certificate of service.

Authority

These reviews are being conducted under authority of title VII of the Tariff Act of 1930; this notice is published pursuant to section 207.62 of the Commission's rules.

Issued: March 2, 1999.

By order of the Commission.

Donna R. Koehnke,

Secretary.

[FR Doc. 99–5654 Filed 3–5–99; 8:45 am]

BILLING CODE 7020–02–P

DEPARTMENT OF JUSTICE

Office of Justice Programs

Agency Information Collection Activities: Proposed Collection; Comment Request

ACTION: Notice of information collection under review; Reinstatement, without change, of a previously approved collection for which approval has expired.

State Identification Systems Formula Grant Program Application Kit

The Department of Justice, Office of Justice Programs, Bureau of Justice Assistance, has submitted the following information collection request to the Office of Management and Budget (OMB) for review and clearance in accordance with emergency review procedures of the Paperwork Reduction Act of 1995. OMB approval has been requested by March 19, 1999. The proposed information collection is published to obtain comments from the public and affected agencies. If granted, the emergency approval is only valid for 180 days. Comments should be directed to OMB, Office of Information Regulation Affairs, Attention: Department of Justice Desk Officer (202) 395–3122, Washington, DC 20530.

During the first 60 days of this same review period, a regular review of this information collection is also being undertaken. All comments and suggestions, or questions regarding additional information, to include obtaining a copy of the proposed information collection instrument with instructions, should be directed to Sharron Fletcher, (202) 515–6638, Office of Justice Programs, Bureau of Justice Assistance, 810 7th Street N.W., Washington DC 20531.

Request written comments and suggestions from the public and affected agencies concerning the proposed collection of information. Your comments should address one or more of the following four points:

(1) Evaluate whether the proposed collection of information is necessary for the proper performance of the functions of the agency, including whether the information will have practical utility:

(2) Evaluate the accuracy of the agency's estimate of the burden of the proposed collection of information, including the validity of the methodology and assumptions used;

(3) Enhance the quality, utility, and clarity of the information to be collected; and

(4) Minimize the burden of the collection of information on those who are to respond, including through the use of appropriate automated, electronic, mechanical, or other technological collection techniques or other forms of information technology, e.g., permitting electronic submission of responses.

Overview of This Information

(1) *Type of Information Collection:* Reinstatement of collection for which OMB Clearance has expired.

(2) *Title of the Form/Collection:* State Identification Systems Formula Grant Program Application Kit.

(3) *Agency form number, if any, and the applicable component of the Department sponsoring the collection:* None. Office of Justice Programs, United States Department of Justice.

(4) *Affected public who will be as or required to respond, as well as a brief abstract:* Primary: State Government. Other: None. The State Identification Systems Formula Grant Program was authorized under the Antiterrorism and Effective Death Penalty Act of 1996 to make funds available to state governments to enhance identification systems of criminal justice agencies at the state and local level.

(5) *An estimate of the total number of respondents and the amount of time estimated for an average respondent to respond/reply:* The time burden of the 52 respondents to complete the surveys is 30 minutes per application.

(6) *An estimate of the total public burden (in hours) associated with the collection:* The total annual hour burden to complete applications for the State Identification Systems Formula Grant Program is 26 annual burden hours.

If additional information is required contact: Ms. Brenda E. Dyer, Deputy Clearance Office, United States Department of Justice, Information Management and Security Staff Justice Management Division, Suite 850, Washington Center, 1001 G Street NW, Washington, DC 20530.

Dated; March 3, 1999.

Brenda E. Dyer,

Department Deputy Clearance Officer, United States Department of Justice.

[FR Doc. 99–5675 Filed 3–5–99; 8:45 am]

BILLING CODE 4410–18–M

DEPARTMENT OF LABOR

Pension and Welfare Benefits Administration

[Application Number: D–10554]

Amendment to Prohibited Transaction Exemption 97–11 (PTE 97–11) for the Receipt of Certain Investment Services by Individuals for Whose Benefit Individual Retirement Accounts or Retirement Plans for Self-Employed Individuals Have Been Established or Maintained

AGENCY: Pension and Welfare Benefits Administration, U.S. Department of Labor.

ACTION: Adoption of Amendment to PTE 97–11.

SUMMARY: This document amends PTE 97–11, a class exemption that permits the receipt of services at reduced or no cost by an individual for whose benefit an individual retirement account (IRA) or, if self-employed, a Keogh Plan, is established or maintained, or by members of his or her family, from a broker-dealer, provided that the conditions of the exemption are met. The amendment affects individuals with a beneficial interest in the IRAs and Keogh Plans who receive such services as well as the broker-dealers who provide such services.

EFFECTIVE DATE: The amendment is effective January 1, 1998.

FOR FURTHER INFORMATION CONTACT: Allison Padams Lavigne, Office of Exemption Determinations, U.S. Department of Labor, (202) 219-8971, (this is not a toll-free number).

SUPPLEMENTARY INFORMATION: On October 21, 1998, notice was published in the **Federal Register** (63 FR 56231) of the pendency before the Department of a proposed amendment to PTE 97–11 (62 FR 5855, February 7, 1997). PTE 97–11 provides relief from the restrictions of sections 406(a)(1)(D) and 406(b) of ERISA and the sanctions resulting from the application of sections 4975(a) and (b), 4975(c)(3) and 408(e)(2) of the Internal Revenue Code of 1986 (the Code) by reason of section 4975(c)(1)(D), (E) and (F) of the Code.*

The amendment to PTE 97–11 adopted by this notice was requested in an exemption application filed on behalf of the Securities Industry Association (SIA). The exemption application was submitted pursuant to section 408(a) of ERISA and section 4975(c)(2) of the Code and in accordance with the procedures set forth in 29 CFR part 2570, subpart B (55 FR 32836, August 10, 1990).

The notice of pendency gave interested persons an opportunity to comment or to request a hearing on the proposed amendment. No public comments or requests for a hearing were received.

For the sake of convenience, the entire text of PTE 97–11, as amended, has been reprinted with this notice.

PTE 97–11 permits the receipt of services at reduced or no cost by an individual for whose benefit an IRA or Keogh Plan is established or maintained or by members of his or her family, from a broker-dealer registered under the Securities Exchange Act of 1934 pursuant to an arrangement in which the account value of, or the fees incurred for services provided to, the IRA or Keogh Plan is/are taken into account for purposes of determining eligibility to receive such services, provided that the conditions of the exemption are met.

The term ''IRA'' is defined in section III(b) of PTE 97–11 to mean an individual retirement account described in section 408(a) of the Code. The definition further states that, for purposes of this exemption, the term IRA shall not include an IRA which is an employee benefit plan covered by Title I of ERISA, except for a Simplified Employee Pension (SEP) described in section 408(k) of the Code or a Simple Retirement Account described in section 408(p) of the Code which provides participants with the unrestricted authority to transfer their balances to IRAs or Simple Retirement Accounts sponsored by different financial institutions. The amendment adopted by this notice modifies section III(b) of PTE 97–11 to include education individual retirement account (Education IRAs) as defined in section 530 of the Code. The Department notes that all the conditions contained in PTE 97–11 still must be satisfied with respect to education IRAs as with all other IRAs and Keogh Plans covered by the exemption.

General Information

The attention of interested persons is directed to the following:

(1) In accordance with section 408(a) of ERISA and section 4975(c)(2) of the Code and based upon the entire record, the Department finds that this amendment is administratively feasible, in the interests of the IRAs and Keogh Plans, and their participants and beneficiaries and protective of the rights of the participants and beneficiaries of such plans.

(2) The amendment is supplemental to, and not in derogation of, any other provisions of ERISA and the Code, including statutory or administrative exemptions and transitional rules. Furthermore, the fact that a transaction is subject to an administrative or statutory exemption is not dispositive of whether the transaction is in fact a prohibited transaction.

(3) The class exemption is applicable to a transaction only if the conditions specified in the class exemption are met.

Exemption

Accordingly, PTE 97–11 is amended under the authority of section of 408(a) of ERISA and section 4975(c)(2) of the Code and in accordance with the procedures set forth in 29 CFR part 2570, subpart B (55 FR 32836, August 10, 1990).

Section I: Covered Transactions

Effective January 1, 1998, the restrictions of sections 406(a)(1)(D) and (b) of ERISA, and the sanctions resulting from the application of section 4975 of the Code, including the loss of exemption of an IRA, pursuant to section 408(e)(2)(A) of the Code, by reason of section 4975(c)(1)(D), (E), and (F) of the Code, shall not apply to the receipt of services at reduced or no cost by an individual for whose benefit an IRA, or, if self-employed, a Keogh Plan, is established or maintained, or by members of his or her family, from a broker-dealer registered under the Securities Exchange Act of 1934 pursuant to an arrangement in which the account value of, or the fees incurred for services provided to, the IRA or Keogh Plan is taken into account for purposes of determining eligibility to receive such services, provided that each condition of Section II of this exemption is satisfied.

Section II: Conditions

(a) The IRA or Keogh Plan whose account value or whose fees are taken into account for purposes of determining eligibility to receive services under the arrangement is established and maintained for the exclusive benefit of the participant covered under the IRA or Keogh Plan, his or her spouse or their beneficiaries.

(b) The services offered under the relationship brokerage arrangement must be of the type that the broker-dealer itself could offer consistent with all applicable federal and state laws regulating broker-dealers.

(c) The services offered under the arrangement are provided by the broker-dealer (or an affiliate of the broker-dealer) in the ordinary course of the broker-dealer's business to customers who qualify for reduced or no cost services, but do not maintain IRAs or Keogh Plans with the broker-dealer.

(d) For the purpose of determining eligibility to receive services, the arrangement satisfies one of the following:

(i) Eligibility requirements based on the account value of the IRA or Keogh Plan are as favorable as any such requirements based on the value of any other type of account which the broker-dealer includes to determine eligibility; or

(ii) Eligibility requirements based on the amount of fees incurred by the IRA or Keogh Plan are as favorable as any requirements based on the amount of fees incurred by any other type of account which the broker-dealer includes to determine eligibility.

(e) The combined total of all fees for the provision of services to the IRA or Keogh Plan is not in excess of reasonable compensation within the meaning of section 4975(d)(2) of the Code.

(f) The investment performance of the IRA or Keogh Plan investment is no less favorable than the investment performance of an identical investment(s) that could have been made at the same time by a customer of the broker-dealer who is not eligible for (or who does not receive) reduced or no cost services.

(g) The services offered under the arrangement to the IRA or Keogh Plan customer must be the same as are

* Section 102 of Reorganization Plan No. 4 of 1978 (43 FR 47713, October 17,1978) generally transferred the authority of the Secretary of the Treasury to issue administrative exemptions under section 4975(c)(2) of the Code to the Secretary of Labor.

offered to non-IRA or non-Keogh Plan customers with account values of the same amount or the same amount of fees generated.

Section III: Definitions

The following definitions apply to this exemption:

(a) The term *broker-dealer* means a broker-dealer registered under the Securities Exchange Act of 1934.

(b) The term *IRA* means an individual retirement account described in Code section 408(a) or an education individual retirement account described in section 530 of the Code. For purposes of this exemption, the term IRA shall not include an IRA which is an employee benefit plan covered by Title I of ERISA, except for a Simplified Employee Pension (SEP) described in section 408(k) of the Code or a Simple Retirement Account described in section 408(p) of the Code which provides participants with the unrestricted authority to transfer their balances to IRAs or Simple Retirement Accounts sponsored by different financial institutions.

(c) The term *Keogh Plan* means a pension, profit-sharing, or stock bonus plan qualified under Code section 401(a) and exempt from taxation under Code section 501(a) under which some or all of the participants are employees described in section 401(c) of the Code. For purposes of this exemption, the term Keogh Plan shall not include a Keogh Plan which is an employee benefit plan covered by Title I of ERISA.

(d) The term *account value* means investments in cash or securities held in the account for which market quotations are readily available. For purposes of this exemption, the term cash shall include savings accounts that are insured by a federal deposit insurance agency that constitute deposits as that term is defined in section 29 CFR 2550.408b–4(c)(3). The term account value shall not include investments in securities that are offered by the broker-dealer (or its affiliate) exclusively to IRAs and Keogh Plans.

(e) An affiliate of a broker-dealer includes any person directly or indirectly controlling, controlled by, or under common control with the broker-dealer. The term control means the power to exercise a controlling influence over the management or policies of a person other than an individual.

(f) The term *members of his or her family* refers to beneficiaries of the individual for whose benefit the IRA or Keogh Plan is established or maintained, who would be members of the family as that term is defined in Code section 4975(e)(6), or a brother, a sister, or spouse of a brother or sister.

(g) The term *service* includes incidental products of a de minimis value which are directly related to the provision of services covered by the exemption.

(h) The term *fees* means commissions and other fees received by the broker-dealer from the IRA or Keogh Plan for the provision of services, including, but not limited to, brokerage commissions, investment management fees, custodial fees, and administrative fees.

Signed at Washington, DC, this 26th day of February 1999.

Alan D. Lebowitz,

Deputy Assistant Secretary for Program Operations, Pension and Welfare Benefits Administration, U. S. Department of Labor.

[FR Doc. 99–5571 Filed 3–5–99; 8:45 am]

BILLING CODE 4510–29–P

DEPARTMENT OF LABOR

Pension and Welfare Benefits Administration

[Application Number: D–10567]

Amendment to Prohibited Transaction Exemption 93–33 (PTE 93–33) for the Receipt of Certain Services by Individuals for Whose Benefit Individual Retirement Accounts or Retirement Plans for Self-Employed Individuals Have Been Established or Maintained

AGENCY: Pension and Welfare Benefits Administration, U.S. Department of Labor.

ACTION: Adoption of Amendment to PTE 93–33.

SUMMARY: This document amends PTE 93–33, a class exemption that permits the receipt of services at reduced or no cost by an individual for whose benefit an individual retirement account (IRA) or, if self-employed, a Keogh Plan, is established or maintained, or by members of his or her family, from a bank, provided that the conditions of the exemption are met. The amendment affects individuals with a beneficial interest in IRAs and Keogh Plans who receive such services as well as the banks that provide such services.

DATES: The amendment is effective January 1, 1998.

FOR FURTHER INFORMATION CONTACT: Ms. Allison Padams Lavigne, Office of Exemption Determinations, Pension and Welfare Benefits Administration, U.S. Department of Labor, (202) 219–8971 (this is not a toll-free number.)

SUPPLEMENTARY INFORMATION: On October 21, 1998, notice was published of the pendency before the Department of a proposed amendment to PTE 93–33 (58 FR 31053, May 28, 1993, as amended, 59 FR 22686, May 2, 1994). PTE 93–33 provides relief from the restrictions of sections 406(a)(1)(D) and 406(b) of the Employee Retirement Income Security Act of 1974 (ERISA) and the sanctions resulting from the application of sections 4975(a) and (b), 4975(c)(3) and 408(e)(2) of the Internal Revenue Code of 1986 (the Code) by reason of section 4975(c)(1)(D), (E) and (F) of the Code.* The amendment was requested in an exemption application dated January 26, 1998 filed by the American Bankers Association.

The application was filed pursuant to section 408(a) of ERISA and section 4975(c)(2) of the Code and in accordance with the procedures set forth in 29 CFR part 2570, subpart B (55 FR 32836, August 10, 1990). The notice of pendency gave interested persons an opportunity to comment or to request a hearing on the proposed amendment. No public comments nor requests for a hearing on the proposed amendment were received. For the sake of convenience, the entire text of PTE 93–33, as amended, has been reprinted with this notice.

PTE 93–33, as amended, permits the receipt of services at reduced or no cost by an individual for whose benefit an IRA or Keogh Plan is established or maintained or by members of his or her family, from a bank pursuant to an arrangement in which the account balance of the IRA or Keogh Plan is taken into account for purposes of determining eligibility to receive such services, provided the conditions of the exemption are met.

Section III (b) of PTE 93–33, as amended, defines the term ''IRA'' as an individual retirement account described in Code section 408(a). In addition, section III(b) provides that for purposes of this exemption, the term IRA shall not include an IRA which is an employee benefit plan covered by Title I of ERISA, except for a Simplified Employee Pension (SEP) described in section 408(k) of the Code which provides participants with the unrestricted authority to transfer their SEP balances to IRAs sponsored by different financial institutions. The amendment set forth in this notice modifies section III(b) of PTE 93–33 to include Education IRAs described in section 530 of the Code and Simple

* Section 102 of Reorganization Plan No. 4 of 1978 (42 FR 47713, October 17, 1978) generally transferred the authority of the Secretary of the Treasury to issue administrative exemptions under section 4975(c)(2) of the Code to the Secretary of Labor.

Retirement Accounts described in section 408(p) of the Code. The Department notes that all conditions contained in PTE 93–33 still must be met pursuant to the amendment.

General Information

The attention of interested persons is directed to the following:

(1) In accordance with section 408(a) of ERISA and section 4975(c)(2) of the Code, and based upon the entire record, the Department finds that the amendment is administratively feasible, in the interests of the IRAs and Keogh Plans and their participants and beneficiaries and protective of the rights of the participants and beneficiaries of such plans.

(2) The amendment is supplemental to, and not in derogation of, any other provisions of ERISA and the Code including statutory or administrative exemptions and transitional rules. Furthermore, the fact that a transaction is subject to an administrative exemption is not dispositive of whether the transaction is in fact a prohibited transaction.

(3) The exemption is applicable to a transaction only if the conditions specified in the class exemption are met.

Exemption

Accordingly, PTE 93–33 is amended under the authority of section 408(a) of ERISA and section 4975(c)(2) of the Code and in accordance with the procedures set forth in 29 CFR Part 2570, Subpart B (55 FR 32836, August 10, 1990).

Section I: Covered Transactions

Effective January 1, 1998, the restrictions of sections 406(a)(1)(D) and 406(b) of ERISA and the sanctions resulting from the application of section 4975 of the Code, including the loss of exemption of an individual retirement account (IRA) pursuant to section 408(e)(2)(A) of the Code, by reason of section 4975(c)(1)(D), (E) and (F) of the Code, shall not apply to the receipt of services at reduced or no cost by an individual for whose benefit an IRA, or, if self-employed, a Keogh Plan, is established or maintained, or by members of his or her family, from a bank pursuant to an arrangement in which the account balance in the IRA or Keogh Plan is taken into account for purposes of determining eligibility to receive such services, provided that each condition of Section II of this exemption is satisfied.

Section II: Conditions

(a) The IRA or Keogh Plan, the balance of which is taken into account for purposes of determining eligibility to receive services at reduced or no cost, is established and maintained for the exclusive benefit of the participant covered under the IRA or Keogh Plan, his or her spouse or their beneficiaries.

(b) The services must be of the type that the bank itself could offer consistent with applicable federal and state banking law.

(c) The services are provided by the bank (or an affiliate of the bank) in the ordinary course of the bank's business to customers who qualify for reduced or no cost banking services but do not maintain IRAs or Keogh Plans with the bank.

(d) For the purpose of determining eligibility to receive services at reduced or no cost, the account balance required by the bank for the IRA or Keogh Plan is equal to the lowest balance required for any other type of account which the bank includes to determine eligibility to receive reduced or no cost services.

(e) The rate of return on the IRA or Keogh Plan investment is no less favorable than the rate of return on an identical investment that could have been made at the same time at the same branch of the bank by a customer of the bank who is not eligible for (or who does not receive) reduced or no cost services.

Section III: Definitions

The following definitions apply to this exemption:

(a) The term bank means a bank described in section 408(n) of the Code.

(b) The term IRA means an individual retirement account described in Code section 408(a) or an education individual retirement account described in section 530 of the Code. For purposes of this exemption, the term IRA shall not include an IRA which is an employee benefit plan covered by Title I of ERISA, except for a Simplified Employee Pension (SEP) described in section 408(k) of the Code or a Simple Retirement Account described in section 408(p) of the Code which provides participants with the unrestricted authority to transfer their balances to IRAs or Simple Retirement Accounts sponsored by different financial institutions.

(c) The term Keogh Plan means a pension, profit sharing, or stock bonus plan qualified under Code section 401(a) and exempt from taxation under Code section 501(a) under which some or all of the participants are employees described in section 401(c) of the Code. For purposes of this exemption, the term Keogh Plan shall not include a Keogh Plan which is an employee benefit plan covered by title I of ERISA.

(d) The term account balance means deposits as that term is defined under 29 CFR 2550.408b–4(c)(3), or investments in securities for which market quotations are readily available. For purposes of this exemption, the term account balance shall not include investments in securities offered by the bank (or its affiliate) exclusively to IRAs and Keogh Plans.

(e) An affiliate of a bank includes any person directly or indirectly controlling, controlled by, or under common control with a bank. The term control means the power to exercise a controlling influence over the management or policies of a person other than an individual.

(f) The term members of his or her family refers to beneficiaries of the individual for whose benefit the IRA or Keogh Plan is established or maintained, who would be members of the family as that term is defined in Code section 4975(e)(6), or a brother, a sister, or spouse of a brother or a sister.

(g) The term service includes incidental products of a de minimis value provided by third persons pursuant to an arrangement with the bank, which are directly related to the provision of banking services covered by the exemption.

Signed at Washington, DC this 26th day of February 1999.

Alan D. Lebowitz,

Deputy Assistant Secretary for Program Operations, Pension and Welfare Benefits Administration, U.S. Department of Labor.

[FR Doc. 99–5572 Filed 3–5–99; 8:45 am]

BILLING CODE 4510–29–P

DEPARTMENT OF LABOR

Pension and Welfare Benefits Administration

[Prohibited Transaction Exemption 99–10; Exemption Application No. D–10630, et al.]

Grant of Individual Exemptions; Genito-Urinary Surgeons, Inc. Profit Sharing Plan (GUS Plan) Michael J. Rosenberg Money Purchase Pension Plan (Rosenberg Plan); Robert Savage Qualified Retirement Plan (Savage Plan), et al.

AGENCY: Pension and Welfare Benefits Administration, Labor.

ACTION: Grant of individual exemptions.

SUMMARY: This document contains exemptions issued by the Department of Labor (the Department) from certain of

the prohibited transaction restrictions of the Employee Retirement Income Security Act of 1974 (the Act) and/or the Internal Revenue Code of 1986 (the Code).

Notices were published in the **Federal Register** of the pendency before the Department of proposals to grant such exemptions. The notices set forth a summary of facts and representations contained in each application for exemption and referred interested persons to the respective applications for a complete statement of the facts and representations. The applications have been available for public inspection at the Department in Washington, DC. The notices also invited interested persons to submit comments on the requested exemptions to the Department. In addition the notices stated that any interested person might submit a written request that a public hearing be held (where appropriate). The applicants have represented that they have complied with the requirements of the notification to interested persons. No public comments and no requests for a hearing, unless otherwise stated, were received by the Department.

The notices of proposed exemption were issued and the exemptions are being granted solely by the Department because, effective December 31, 1978, section 102 of Reorganization Plan No. 4 of 1978 (43 FR 47713, October 17, 1978) transferred the authority of the Secretary of the Treasury to issue exemptions of the type proposed to the Secretary of Labor.

Statutory Findings

In accordance with section 408(a) of the Act and/or section 4975(c)(2) of the Code and the procedures set forth in 29 CFR Part 2570, Subpart B (55 FR 32836, 32847, August 10, 1990) and based upon the entire record, the Department makes the following findings:

(a) The exemptions are administratively feasible;

(b) They are in the interests of the plans and their participants and beneficiaries; and

(c) They are protective of the rights of the participants and beneficiaries of the plans.

Genito-Urinary Surgeons, Inc. Profit Sharing Plan (GUS Plan); Michael J. Rosenberg Money Purchase Pension Plan (Rosenberg Plan); Robert Savage Qualified Retirement Plan (Savage Plan); Located in Toledo, Ohio

[Prohibited Transaction Exemption Number 99–10; Application Numbers D–10630, D–10631 and D–10632, respectively]

Exemption

The restrictions of sections 406(a), 406(b)(1) and (b)(2) of the Act and the sanctions resulting from the application of section 4975 of the Code, by reason of section 4975(c)(1)(A) through (E) of the Code, do not apply to: (1) the cash sale of certain shares of preferred stock (the Preferred Stock) issued by TTC Holdings Inc. (TTC) to TTC, by the individually-directed account of Dr. Gregor Emmert in the GUS Plan, by the individually-directed account of Mr. Michael J. Rosenberg in the Rosenberg Plan, and by the individually-directed account of Mr. Robert Savage in the Savage Plan (collectively, the Accounts); and (2) the subsequent purchase of certain shares of common stock (the Common Stock) issued by TTC by Messrs. Emmert, Rosenberg and Savage (collectively; the Participants), in their own name, from TTC pursuant to an agreement with TTC that the purchase of the Common Stock was to occur immediately after the sale of the Preferred Stock by the Plans; provided that the following conditions were met:

(a) The sale of the Preferred Stock to TTC by the Accounts and the purchase of the Common Stock from TTC by the Participants, acting in their individual capacity, were one-time transactions for cash;

(b) The transactions described in (a) above took place on the same business day;

(c) The amount paid to the Accounts by TTC was the fair market value of the Preferred Stock, as determined by a qualified independent appraiser at the time of the sale;

(d) The Participants, in their individual capacity, purchased from TTC shares of the Common Stock which were equal in number and value to the shares of Preferred Stock sold by the Accounts to TTC;

(e) A qualified independent fiduciary (the Independent Fiduciary) determined that the transactions described herein were in the best interests and protective of the Accounts at the time of the transactions; and

(f) The Independent Fiduciary supervised the transactions; assured that the conditions of this proposed exemption were met; and took whatever actions necessary to protect the interests of the Accounts, including reviewing amounts paid by TTC for the Preferred Stock.

EFFECTIVE DATE: The effective date of this exemption is December 1, 1998.

For a more complete statement of the facts and representations supporting the Department's decision to grant this exemption, please refer to the notice of proposed exemption published on January 21, 1999, at 64 FR 3342.

FOR FURTHER INFORMATION CONTACT: James Scott Frazier of the Department, telephone (202) 219–8881. (This is not a toll-free number.)

Mellon Financial Markets, Inc. (Mellon); Located in Pittsburgh, Pennsylvania

[Prohibited Transaction Exemption 99–11; Exemption Application No. D–10695]

Exemption

I. Transactions

A. The restrictions of sections 406(a) and 407(a) of the Act and the taxes imposed by section 4975(a) and (b) of the Code by reason of section 4975(c)(1)(A) through (D) of the Code shall not apply to the following transactions involving trusts and certificates evidencing interests therein:

(1) The direct or indirect sale, exchange or transfer of certificates in the initial issuance of certificates between the sponsor or underwriter and an employee benefit plan when the sponsor, servicer, trustee or insurer of a trust, the underwriter of the certificates representing an interest in the trust, or an obligor is a party in interest with respect to such plan;

(2) The direct or indirect acquisition or disposition of certificates by a plan in the secondary market for such certificates; and

(3) The continued holding of certificates acquired by a plan pursuant to subsection I.A.(1) or (2).

Notwithstanding the foregoing, section I.A. does not provide an exemption from the restrictions of sections 406(a)(1)(E), 406(a)(2) and 407 for the acquisition or holding of a certificate on behalf of an Excluded Plan by any person who has discretionary authority or renders investment advice with respect to the assets of that Excluded Plan.[1]

B. The restrictions of sections 406(b)(1) and 406(b)(2) of the Act, and the taxes imposed by section 4975(a) and (b) of the Code by reason of section

[1] Section I.A. provides no relief from sections 406(a)(1)(E), 406(a)(2) and 407 for any person rendering investment advice to an Excluded Plan within the meaning of section 3(21)(A)(ii) and regulation 29 CFR 2510.3–21(c).

4975(c)(1)(E) of the Code, shall not apply to:

(1) The direct or indirect sale, exchange or transfer of certificates in the initial issuance of certificates between the sponsor or underwriter and a plan when the person who has discretionary authority or renders investment advice with respect to the investment of plan assets in the certificates is (a) an obligor with respect to 5 percent or less of the fair market value of obligations or receivables contained in the trust, or (b) an affiliate of a person described in (a); if:

(i) the plan is not an Excluded Plan;

(ii) solely in the case of an acquisition of certificates in connection with the initial issuance of the certificates, at least 50 percent of each class of certificates in which plans have invested is acquired by persons independent of the members of the Restricted Group and at least 50 percent of the aggregate interest in the trust is acquired by persons independent of the Restricted Group;

(iii) a plan's investment in each class of certificates does not exceed 25 percent of all of the certificates of that class outstanding at the time of the acquisition; and

(iv) immediately after the acquisition of the certificates, no more than 25 percent of the assets of a plan with respect to which the person has discretionary authority or renders investment advice are invested in certificates representing an interest in a trust containing assets sold or serviced by the same entity.[2] For purposes of this paragraph B.(1)(iv) only, an entity will not be considered to service assets contained in a trust if it is merely a subservicer of that trust;

(2) The direct or indirect acquisition or disposition of certificates by a plan in the secondary market for such certificates, provided that the conditions set forth in paragraphs B.(1)(i), (iii) and (iv) are met; and

(3) The continued holding of certificates acquired by a plan pursuant to subsection I.B.(1) or (2).

C. The restrictions of sections 406(a), 406(b) and 407(a) of the Act, and the taxes imposed by section 4975(a) and (b) of the Code by reason of section 4975(c) of the Code, shall not apply to transactions in connection with the servicing, management and operation of a trust, provided:

(1) Such transactions are carried out in accordance with the terms of a binding pooling and servicing arrangement; and

(2) The pooling and servicing agreement is provided to, or described in all material respects in, the prospectus or private placement memorandum provided to investing plans before they purchase certificates issued by the trust.[3]

Notwithstanding the foregoing, section I.C. does not provide an exemption from the restrictions of section 406(b) of the Act, or from the taxes imposed by reason of section 4975(c) of the Code, for the receipt of a fee by a servicer of the trust from a person other than the trustee or sponsor, unless such fee constitutes a ''qualified administrative fee'' as defined in section III.S.

D. The restrictions of sections 406(a) and 407(a) of the Act, and the taxes imposed by sections 4975(a) and (b) of the Code by reason of sections 4975(c)(1)(A) through (D) of the Code, shall not apply to any transactions to which those restrictions or taxes would otherwise apply merely because a person is deemed to be a party in interest or disqualified person (including a fiduciary) with respect to a plan by virtue of providing services to the plan (or by virtue of having a relationship to such service provider described in section 3(14)(F), (G), (H) or (I) of the Act or section 4975(e)(2)(F), (G), (H) or (I) of the Code), solely because of the plan's ownership of certificates.

II. General Conditions

A. The relief provided under Part I is available only if the following conditions are met:

(1) The acquisition of certificates by a plan is on terms (including the certificate price) that are at least as favorable to the plan as they would be in an arm's-length transaction with an unrelated party;

(2) The rights and interests evidenced by the certificates are not subordinated to the rights and interests evidenced by other certificates of the same trust;

(3) The certificates acquired by the plan have received a rating from a rating agency (as defined in section III.W.) at the time of such acquisition that is in one of the three highest generic rating categories;

(4) The trustee is not an affiliate of any other member of the Restricted Group. However, the trustee shall not be considered to be an affiliate of a servicer solely because the trustee has succeeded to the rights and responsibilities of the servicer pursuant to the terms of a pooling and servicing agreement providing for such succession upon the occurrence of one or more events of default by the servicer;

(5) The sum of all payments made to and retained by the underwriters in connection with the distribution or placement of certificates represents not more than reasonable compensation for underwriting or placing the certificates; the sum of all payments made to and retained by the sponsor pursuant to the assignment of obligations (or interests therein) to the trust represents not more than the fair market value of such obligations (or interests); and the sum of all payments made to and retained by the servicer represents not more than reasonable compensation for the servicer's services under the pooling and servicing agreement and reimbursement of the servicer's reasonable expenses in connection therewith;

(6) The plan investing in such certificates is an ''accredited investor'' as defined in Rule 501(a)(1) of Regulation D of the Securities and Exchange Commission under the Securities Act of 1933; and

(7) In the event that the obligations used to fund a trust have not all been transferred to the trust on the closing date, additional obligations as specified in subsection III.B.(1) may be transferred to the trust during the pre-funding period (as defined in section III.BB.) in exchange for amounts credited to the pre-funding account (as defined in section III.Z.), provided that:

(a) The pre-funding limit (as defined in section III.AA.) is not exceeded;

(b) All such additional obligations meet the same terms and conditions for eligibility as those of the original obligations used to create the trust corpus (as described in the prospectus or private placement memorandum and/or pooling and servicing agreement for such certificates), which terms and conditions have been approved by a rating agency. Notwithstanding the foregoing, the terms and conditions for determining the eligibility of an obligation may be changed if such changes receive prior approval either by a majority of the outstanding certificateholders or by a rating agency;

[2] For purposes of this exemption, each plan participating in a commingled fund (such as a bank collective trust fund or insurance company pooled separate account) shall be considered to own the same proportionate undivided interest in each asset of the commingled fund as its proportionate interest in the total assets of the commingled fund as calculated on the most recent preceding valuation date of the fund.

[3] In the case of a private placement memorandum, such memorandum must contain substantially the same information that would be disclosed in a prospectus if the offering of the certificates were made in a registered public offering under the Securities Act of 1933. In the Department's view, the private placement memorandum must contain sufficient information to permit plan fiduciaries to make informed investment decisions.

(c) The transfer of such additional obligations to the trust during the pre-funding period does not result in the certificates receiving a lower credit rating from a rating agency upon termination of the pre-funding period than the rating that was obtained at the time of the initial issuance of the certificates by the trust;

(d) The weighted average annual percentage interest rate (the average interest rate) for all of the obligations in the trust at the end of the pre-funding period will not be more than 100 basis points lower than the average interest rate for the obligations which were transferred to the trust on the closing date;

(e) In order to ensure that the characteristics of the receivables actually acquired during the pre-funding period are substantially similar to those which were acquired as of the closing date, the characteristics of the additional obligations will either be monitored by a credit support provider or other insurance provider which is independent of the sponsor, or an independent accountant retained by the sponsor will provide the sponsor with a letter (with copies provided to the rating agency, the underwriter and the trustees) stating whether or not the characteristics of the additional obligations conform to the characteristics of such obligations described in the prospectus, private placement memorandum and/or pooling and servicing agreement. In preparing such letter, the independent accountant will use the same type of procedures as were applicable to the obligations which were transferred as of the closing date;

(f) The pre-funding period shall be described in the prospectus or private placement memorandum provided to investing plans; and

(g) The trustee of the trust (or any agent with which the trustee contracts to provide trust services) will be a substantial financial institution or trust company experienced in trust activities and familiar with its duties, responsibilities and liabilities as a fiduciary under the Act. The trustee, as the legal owner of the obligations in the trust, will enforce all the rights created in favor of certificateholders of such trust, including employee benefit plans subject to the Act.

B. Neither any underwriter, sponsor, trustee, servicer, insurer, nor any obligor, unless it or any of its affiliates has discretionary authority or renders investment advice with respect to the plan assets used by a plan to acquire certificates, shall be denied the relief provided under Part I, if the provision of subsection II.A.(6) above is not satisfied with respect to acquisition or holding by a plan of such certificates, provided that (1) such condition is disclosed in the prospectus or private placement memorandum; and (2) in the case of a private placement of certificates, the trustee obtains a representation from each initial purchaser which is a plan that it is in compliance with such condition, and obtains a covenant from each initial purchaser to the effect that, so long as such initial purchaser (or any transferee of such initial purchaser's certificates) is required to obtain from its transferee a representation regarding compliance with the Securities Act of 1933, any such transferees will be required to make a written representation regarding compliance with the condition set forth in subsection II.A.(6) above.

III. Definitions

For purposes of this exemption:

A. *Certificate* means:

(1) a certificate—

(a) that represents a beneficial ownership interest in the assets of a trust; and

(b) that entitles the holder to pass-through payments of principal, interest, and/or other payments made with respect to the assets of such trust; or

(2) a certificate denominated as a debt instrument—

(a) that represents an interest in a Real Estate Mortgage Investment Conduit (REMIC) or a Financial Asset Securitization Investment Trust (FASIT) within the meaning of section 860D(a) or section 860L, respectively, of the Internal Revenue Code of 1986; and

(b) That is issued by, and is an obligation of, a trust; with respect to certificates defined in (1) and (2) above for which Mellon or any of its affiliates is either (i) the sole underwriter or the manager or co-manager of the underwriting syndicate, or (ii) a selling or placement agent.

For purposes of this exemption, references to ''certificates representing an interest in a trust'' include certificates denominated as debt which are issued by a trust.

B. *Trust* means an investment pool, the corpus of which is held in trust and consists solely of:

(1)(a) Secured consumer receivables that bear interest or are purchased at a discount (including, but not limited to, home equity loans and obligations secured by shares issued by a cooperative housing association); and/or

(b) Secured credit instruments that bear interest or are purchased at a discount in transactions by or between business entities (including, but not limited to, qualified equipment notes secured by leases, as defined in section III.T); and/or

(c) Obligations that bear interest or are purchased at a discount and which are secured by single-family residential, multi-family residential and commercial real property (including obligations secured by leasehold interests on commercial real property); and/or

(d) Obligations that bear interest or are purchased at a discount and which are secured by motor vehicles or equipment, or qualified motor vehicle leases (as defined in section III.U); and/or

(e) ''Guaranteed governmental mortgage pool certificates,'' as defined in 29 CFR 2510.3–101(i)(2); and/or

(f) Fractional undivided interests in any of the obligations described in clauses (a)–(e) of this section B.(1);

(2) Property which had secured any of the obligations described in subsection B.(1);

(3)(a) Undistributed cash or temporary investments made therewith maturing no later than the next date on which distributions are to be made to certificateholders; and/or

(b) Cash or investments made therewith which are credited to an account to provide payments to certificateholders pursuant to any yield supplement agreement or similar yield maintenance arrangement to supplement the interest rates otherwise payable on obligations described in subsection III.B.(1) held in the trust, provided that such arrangements do not involve swap agreements or other notional principal contracts; and/or

(c) Cash transferred to the trust on the closing date and permitted investments made therewith which:

(i) Are credited to a pre-funding account established to purchase additional obligations with respect to which the conditions set forth in clauses (a)–(g) of subsection II.A.(7) are met and/or;

(ii) Are credited to a capitalized interest account (as defined in section III.X.); and

(iii) Are held in the trust for a period ending no later than the first distribution date to certificateholders occurring after the end of the pre-funding period.

For purposes of this clause (c) of subsection III.B.(3), the term ''permitted investments'' means investments which are either: (i) Direct obligations of, or obligations fully guaranteed as to timely payment of principal and interest by the United States, or any agency or instrumentality thereof, provided that such obligations are backed by the full faith and credit of the United States or (ii) have been rated (or the obligor has

been rated) in one of the three highest generic rating categories by a rating agency; are described in the pooling and servicing agreement; and are permitted by the rating agency; and

(4) Rights of the trustee under the pooling and servicing agreement, and rights under any insurance policies, third-party guarantees, contracts of suretyship, yield supplement agreements described in clause (b) of subsection III.B.(3) and other credit support arrangements with respect to any obligations described in subsection III.B.(1).

Notwithstanding the foregoing, the term ''trust'' does not include any investment pool unless: (i) the investment pool consists only of assets of the type described in clauses (a) through (f) of subsection III.B.(1) which have been included in other investment pools, (ii) certificates evidencing interests in such other investment pools have been rated in one of the three highest generic rating categories by a rating agency for at least one year prior to the plan's acquisition of certificates pursuant to this exemption, and (iii) certificates evidencing interests in such other investment pools have been purchased by investors other than plans for at least one year prior to the plan's acquisition of certificates pursuant to this exemption.

C. *Underwriter* means:

(1) Mellon;

(2) Any person directly or indirectly, through one or more intermediaries, controlling, controlled by or under common control with Mellon; or

(3) Any member of an underwriting syndicate or selling group of which Mellon or a person described in (2) is a manager or co-manager with respect to the certificates.

D. *Sponsor* means the entity that organizes a trust by depositing obligations therein in exchange for certificates.

E. *Master Servicer* means the entity that is a party to the pooling and servicing agreement relating to trust assets and is fully responsible for servicing, directly or through subservicers, the assets of the trust.

F. *Subservicer* means an entity which, under the supervision of and on behalf of the master servicer, services obligations contained in the trust, but is not a party to the pooling and servicing agreement.

G. *Servicer* means any entity which services obligations contained in the trust, including the master servicer and any subservicer.

H. *Trustee* means the trustee of the trust, and in the case of certificates which are denominated as debt instruments, also means the trustee of the indenture trust.

I. *Insurer* means the insurer or guarantor of, or provider of other credit support for, a trust. Notwithstanding the foregoing, a person is not an insurer solely because it holds securities representing an interest in a trust which are of a class subordinated to certificates representing an interest in the same trust.

J. *Obligor* means any person, other than the insurer, that is obligated to make payments with respect to any obligation or receivable included in the trust. Where a trust contains qualified motor vehicle leases or qualified equipment notes secured by leases, ''obligor'' shall also include any owner of property subject to any lease included in the trust, or subject to any lease securing an obligation included in the trust.

K. *Excluded Plan* means any plan with respect to which any member of the Restricted Group is a ''plan sponsor'' within the meaning of section 3(16)(B) of the Act.

L. *Restricted Group* with respect to a class of certificates means:

(1) each underwriter;

(2) each insurer;

(3) the sponsor;

(4) the trustee;

(5) each servicer;

(6) any obligor with respect to obligations or receivables included in the trust constituting more than 5 percent of the aggregate unamortized principal balance of the assets in the trust, determined on the date of the initial issuance of certificates by the trust; or

(7) any affiliate of a person described in (1)–(6) above.

M. *Affiliate* of another person includes:

(1) Any person directly or indirectly, through one or more intermediaries, controlling, controlled by, or under common control with such other person;

(2) Any officer, director, partner, employee, relative (as defined in section 3(15) of the Act), a brother, a sister, or a spouse of a brother or sister of such other person; and

(3) Any corporation or partnership of which such other person is an officer, director or partner.

N. *Control* means the power to exercise a controlling influence over the management or policies of a person other than an individual.

O. A person will be *independent* of another person only if:

(1) such person is not an affiliate of that other person; and

(2) the other person, or an affiliate thereof, is not a fiduciary who has investment management authority or renders investment advice with respect to any assets of such person.

P. *Sale* includes the entrance into a forward delivery commitment (as defined in section Q below), provided:

(1) The terms of the forward delivery commitment (including any fee paid to the investing plan) are no less favorable to the plan than they would be in an arm's-length transaction with an unrelated party;

(2) The prospectus or private placement memorandum is provided to an investing plan prior to the time the plan enters into the forward delivery commitment; and

(3) At the time of the delivery, all conditions of this exemption applicable to sales are met.

Q. *Forward delivery commitment* means a contract for the purchase or sale of one or more certificates to be delivered at an agreed future settlement date. The term includes both mandatory contracts (which contemplate obligatory delivery and acceptance of the certificates) and optional contracts (which give one party the right but not the obligation to deliver certificates to, or demand delivery of certificates from, the other party).

R. *Reasonable compensation* has the same meaning as that term is defined in 29 CFR 2550.408c–2.

S. *Qualified Administrative Fee* means a fee which meets the following criteria:

(1) The fee is triggered by an act or failure to act by the obligor other than the normal timely payment of amounts owing in respect of the obligations;

(2) The servicer may not charge the fee absent the act or failure to act referred to in (1);

(3) The ability to charge the fee, the circumstances in which the fee may be charged, and an explanation of how the fee is calculated are set forth in the pooling and servicing agreement; and

(4) The amount paid to investors in the trust will not be reduced by the amount of any such fee waived by the servicer.

T. *Qualified Equipment Note Secured By A Lease* means an equipment note:

(1) Which is secured by equipment which is leased;

(2) Which is secured by the obligation of the lessee to pay rent under the equipment lease; and

(3) With respect to which the trust's security interest in the equipment is at least as protective of the rights of the trust as would be the case if the equipment note were secured only by the equipment and not the lease.

U. *Qualified Motor Vehicle Lease* means a lease of a motor vehicle where:

(1) the trust owns or holds a security interest in the lease;

(2) the trust owns or holds a security interest in the leased motor vehicle; and

(3) the trust's security interest in the leased motor vehicle is at least as protective of the trust's rights as would be the case if the trust consisted of motor vehicle installment loan contracts.

V. *Pooling and Servicing Agreement* means the agreement or agreements among a sponsor, a servicer and the trustee establishing a trust. In the case of certificates which are denominated as debt instruments, ''Pooling and Servicing Agreement'' also includes the indenture entered into by the trustee of the trust issuing such certificates and the indenture trustee.

W. *Rating Agency* means Standard & Poor's Structured Rating Group (S&P's), Moody's Investors Service, Inc. (Moody's), Duff & Phelps Credit Rating Co. (D & P) or Fitch IBCA, Inc. (Fitch), or their successors.

X. *Capitalized Interest Account* means a trust account: (i) which is established to compensate certificateholders for shortfalls, if any, between investment earnings on the pre-funding account and the pass-through rate payable under the certificates; and (ii) which meets the requirements of clause (c) of subsection III.B.(3).

Y. *Closing Date* means the date the trust is formed, the certificates are first issued and the trust's assets (other than those additional obligations which are to be funded from the pre-funding account pursuant to subsection II.A.(7)) are transferred to the trust.

Z. *Pre-Funding Account* means a trust account: (i) which is established to purchase additional obligations, which obligations meet the conditions set forth in clauses (a)-(g) of subsection II.A.(7); and (ii) which meets the requirements of clause (c) of subsection III.B.(3).

AA. *Pre-Funding Limit* means a percentage or ratio of the amount allocated to the pre-funding account, as compared to the total principal amount of the certificates being offered which is less than or equal to 25 percent.

BB. *Pre-Funding Period* means the period commencing on the closing date and ending no later than the earliest to occur of: (i) the date the amount on deposit in the pre-funding account is less than the minimum dollar amount specified in the pooling and servicing agreement; (ii) the date on which an event of default occurs under the pooling and servicing agreement; or (iii) the date which is the later of three months or 90 days after the closing date.

CC. *Mellon* means Mellon Financial Markets, Inc. and its affiliates.

The Department notes that this exemption is included within the meaning of the term ''Underwriter Exemption'' as it is defined in section V(h) of Prohibited Transaction Exemption 95–60 (60 FR 35925, July 12, 1995), the Class Exemption for Certain Transactions Involving Insurance Company General Accounts (see 60 FR at 35932).

For a more complete statement of the facts and representations supporting the Department's decision to grant this exemption, refer to the notice of proposed exemption published on January 21, 1999 at 64 FR 3344.

WRITTEN COMMENTS: The only written comments received by the Department were submitted by the applicant.

The applicant's first comment relates to Sections III.F. and III.G. of the proposed exemption, which contain the definition of the terms ''Subservicer'' and ''Servicer'', respectively. Mellon's application, which was based on prior exemption applications requesting similar relief for other entities, had used the term ''obligations'' in place of ''loans'' in these definitions. The applicant's comment states that the term ''obligations'', which is broader than the term ''loans'', is more consistent with the framework of the requested exemption. In this regard, the definition of the term ''Trust'' in Section III.B. of the exemption, which lists the assets that may be held in a trust of the type described in the exemption, refers to ''receivables'' and ''obligations'', among other things, but uses the term ''loans'' only in subparagraph (1)(a) therein as an example of a type of secured consumer receivable. Therefore, to avoid any implication that the terms ''Subservicer'' and ''Servicer'', as defined in Sections III.F. and III.G. of the proposed exemption, relate only to a narrow class of loan assets included within a Trust, the applicant requests that the term ''loans'' in those definitions be replaced by the term ''obligations'' in order to make clearer that the definitions cover a servicer with respect to any serviced assets held in the trust.

The applicant's second comment related to Section III.U. of the proposed exemption, which defines the term ''Qualified Motor Vehicle Lease''. In listing the requirements for such a lease, Subparagraph (1) of Section III.U. of the proposed exemption requires that the trust ''owns or holds'' the security interest in the lease, whereas Subparagraph (2) therein requires that the trust only ''hold'' a security interest in the leased motor vehicle. The applicant's comment states that the phrase ''owns or holds'' should also be used in Subparagraph (2) of Section III.U. The applicant notes that this usage would avoid any implication that the exemption intends to draw a distinction between the trust's rights in the security interest in the lease versus the trust's rights in the security interest in the motor vehicle. Therefore, the applicant requests that the phrase ''owns or holds'' replace the word ''holds'' in Subparagraph (2) of Section III.U.

The Department has considered the entire record, including the comments filed by the applicant, and has determined to grant the exemption as proposed, with the two modifications requested in the applicant's comment letter.

FOR FURTHER INFORMATION CONTACT: Gary Lefkowitz of the Department, telephone (202) 219–8881. (This is not a toll-free number.)

State Street Bank and Trust Company (State Street) Located in Boston, Massachusetts

[Prohibited Transaction Exemption 99–12; Exemption Application Number D–10701]

Exemption

Section I. Transactions

The restrictions of section 406(a)(1)(A) through (D) and section 406(b)(1) and (b)(2) of the Act and the sanctions resulting from the application of section 4975 of the Code, by reason of section 4975(c)(1)(A) through (E) of the Code, shall not apply to the sale (the Sale) of fractional amounts of certain fixed-income instruments (Fractional Amounts) to State Street and its affiliates by plans for which State Street or its affiliates provide fiduciary or other services (Client Plans), as well as employee benefit plans established and maintained by State Street or its affiliates (State Street Plans; collectively, the Plans), provided that the following conditions are met:

(a) Each Sale involves a one time transaction for cash;

(b) The terms of each Sale are at least as favorable to the Plan as those terms which would be available in an arm's-length transaction with an unrelated party;

(c) The Plans receive an amount which is not less than the par value for each of the Fractional Amounts;

(d) In the case of single Client Plans,

(1) each Sale is subject to the prior consent of an independent plan fiduciary;

(2) the independent fiduciary of each Plan is furnished with notice within 90 days of the proposed Sale, providing information necessary for the

independent fiduciary to determine whether to approve the Sale transaction. If the fixed-income instruments are not redenominated within a year of provision of this notice, additional notice will be provided to the independent fiduciaries of each Plan each year notifying them of their right not to participate in this program of Sales; and

(3) each independent fiduciary who determines to participate in the Sale receives written confirmation of the decision to participate and written confirmation of the transaction and its terms.

(e) In the case of Client Plans participating in collective funds for which State Street serves as trustee or investment manager,

(1) each Sale engaged in by the collective fund is subject to the prior approval of each independent plan fiduciary of Plans participating in the fund;

(2) the independent fiduciary of each Plan is furnished notice within 90 days of the proposed Sale, containing information necessary for the independent fiduciary to determine whether to approve the Sale transaction or withdraw from the collective fund prior to the Sale. If the fixed-income instruments are not redenominated within a year of provision of this notice, additional notice will be provided to the independent fiduciaries each year notifying them of their right to withdraw from the collective fund;

(3) each independent fiduciary of a plan participating in a collective fund who determines to participate in the Sale receives written confirmation of the decision to participate and written confirmation of the transaction and its terms;

(f) In the case of the Plans, State Street must engage in the Sale within 30 days of the date that the Fractional Amounts are received by State Street as custodian or trustee for the Plans from the issuers of the fixed-income security;

(g) The Plans do not incur any commissions or other expenses in connection with the Sales; and

(h) (1) State Street or an affiliate maintains or causes to be maintained within the United States, for a period of six years from the date of such transaction, the records necessary to enable the persons described in this section to determine whether the conditions of this exemption have been met; except that a party in interest with respect to an employee benefit plan, other than State Street or its affiliates, shall not be subject to a civil penalty under section 502(i) of the Act or the taxes imposed by section 4975(a) or (b) of the Code, if such records are not maintained, or are not available for examination, as required by this section, and a prohibited transaction will not be deemed to have occurred if, due to circumstances beyond the control of State Street or its affiliates, such records are lost or destroyed prior to the end of such six year period;

(2) The records referred to in subsection (1) above are unconditionally available for examination during normal business hours by duly authorized employees of (a) the Department, (b) the Internal Revenue Service, (c) plan participants and beneficiaries, (d) any employer of plan participants and beneficiaries, and (e) any employee organization whose members are covered by such plan; except that none of the persons described in (c) through (e) of this subsection shall be authorized to examine trade secrets of State Street or its affiliates or any commercial or financial information which is privileged or confidential.

Section II. Definitions

(a) The term *affiliate* of State Street means any other bank or similar financial institution directly or indirectly controlling, controlled by, or under common control with State Street.

(b) The term *Euro* means the single European currency introduced on January 1, 1999 in eleven Member States of the European Union.

(c) The term *Fractional Amount* means, with respect to any fixed-income instrument, an amount less than one Euro.

(d) The term *independent plan fiduciary* means a plan fiduciary independent of State Street and any of its affiliates.

(e) The term *par value* means the face value of the fixed-income instrument.

(f) The term *Plan* includes all employee benefit plans to which State Street or an affiliate acts as a service provider, including a fiduciary, and all plans established and maintained by State Street and its affiliates, which have net assets of at least $25,000,000.

EFFECTIVE DATE: This exemption is effective for the period beginning on January 1, 1999 and ending three years from the date on which each country joining the European Economic and Monetary Union converts to the Euro.

For a more complete statement of the facts and representations supporting the Department's decision to grant this exemption, please refer to the notice of proposed exemption published in the **Federal Register** on January 27, 1999 at 64 FR 4144.

FOR FURTHER INFORMATION: Contact James Scott Frazier of the Department, phone number (202) 219–8881 (this is not a toll-free number).

General Information

The attention of interested persons is directed to the following:

(1) The fact that a transaction is the subject of an exemption under section 408(a) of the Act and/or section 4975(c)(2) of the Code does not relieve a fiduciary or other party in interest or disqualified person from certain other provisions to which the exemptions does not apply and the general fiduciary responsibility provisions of section 404 of the Act, which among other things require a fiduciary to discharge his duties respecting the plan solely in the interest of the participants and beneficiaries of the plan and in a prudent fashion in accordance with section 404(a)(1)(B) of the Act; nor does it affect the requirement of section 401(a) of the Code that the plan must operate for the exclusive benefit of the employees of the employer maintaining the plan and their beneficiaries;

(2) These exemptions are supplemental to and not in derogation of, any other provisions of the Act and/or the Code, including statutory or administrative exemptions and transactional rules. Furthermore, the fact that a transaction is subject to an administrative or statutory exemption is not dispositive of whether the transaction is in fact a prohibited transaction; and

(3) The availability of these exemptions is subject to the express condition that the material facts and representations contained in each application are true and complete and accurately describe all material terms of the transaction which is the subject of the exemption. In the case of continuing exemption transactions, if any of the material facts or representations described in the application change after the exemption is granted, the exemption will cease to apply as of the date of such change. In the event of any such change, application for a new exemption may be made to the Department.

Signed at Washington, DC, this 3rd day of March, 1999.

Ivan Strasfeld,

Director of Exemption Determinations, Pension and Welfare Benefits Administration, Department of Labor.

[FR Doc. 99–5573 Filed 3–5–99; 8:45 am]

BILLING CODE 4510–29–P

DEPARTMENT OF LABOR

Pension and Welfare Benefits Administration

[Application No. D–10622, et al.]

Proposed Exemptions; VECO Corporation (VECO)

AGENCY: Pension and Welfare Benefits Administration, Labor.

ACTION: Notice of proposed exemptions.

SUMMARY: This document contains notices of pendency before the Department of Labor (the Department) of proposed exemptions from certain of the prohibited transaction restrictions of the Employee Retirement Income Security Act of 1974 (the Act) and/or the Internal Revenue Code of 1986 (the Code).

Written Comments and Hearing Requests

Unless otherwise stated in the Notice of Proposed Exemption, all interested persons are invited to submit written comments, and with respect to exemptions involving the fiduciary prohibitions of section 406(b) of the Act, requests for hearing within 45 days from the date of publication of this **Federal Register** Notice. Comments and requests for a hearing should state: (1) The name, address, and telephone number of the person making the comment or request, and (2) the nature of the person's interest in the exemption and the manner in which the person would be adversely affected by the exemption. A request for a hearing must also state the issues to be addressed and include a general description of the evidence to be presented at the hearing.

ADDRESSES: All written comments and request for a hearing (at least three copies) should be sent to the Pension and Welfare Benefits Administration, Office of Exemption Determinations, Room N–5649, U.S. Department of Labor, 200 Constitution Avenue, N.W., Washington, D.C. 20210. Attention: Application No. stated in each Notice of Proposed Exemption. The applications for exemption and the comments received will be available for public inspection in the Public Documents Room of Pension and Welfare Benefits Administration, U.S. Department of Labor, Room N–5507, 200 Constitution Avenue, N.W., Washington, D.C. 20210.

Notice to Interested Persons

Notice of the proposed exemptions will be provided to all interested persons in the manner agreed upon by the applicant and the Department within 15 days of the date of publication in the **Federal Register**. Such notice shall include a copy of the notice of proposed exemption as published in the **Federal Register** and shall inform interested persons of their right to comment and to request a hearing (where appropriate).

SUPPLEMENTARY INFORMATION: The proposed exemptions were requested in applications filed pursuant to section 408(a) of the Act and/or section 4975(c)(2) of the Code, and in accordance with procedures set forth in 29 CFR Part 2570, Subpart B (55 FR 32836, 32847, August 10, 1990). Effective December 31, 1978, section 102 of Reorganization Plan No. 4 of 1978 (43 FR 47713, October 17, 1978) transferred the authority of the Secretary of the Treasury to issue exemptions of the type requested to the Secretary of Labor. Therefore, these notices of proposed exemption are issued solely by the Department.

The applications contain representations with regard to the proposed exemptions which are summarized below. Interested persons are referred to the applications on file with the Department for a complete statement of the facts and representations.

VECO Corporation (VECO), Located in Anchorage, Alaska

[Exemption Application Number D–10622]

Proposed Exemption

The Department is considering granting an exemption under the authority of section 408(a) of the Act and section 4975 (c)(2) of the Code and in accordance with the procedures set forth in 29 CFR Part 2570, Subpart B (55 FR 32826, 32847, August 10, 1990). If the exemption is granted, the restrictions of sections 406(a), 406(b)(1) and (2) of the Act and the sanctions resulting from the application of section 4975 of the Code, by reason of section 4975(c)(1)(A) through (E) of the Code, shall not apply to the proposed sale (the Sale) of a certain parcel of unimproved real property (the Property) from the VECO Corporation Profit Sharing Plan and Trust (the Plan) to Norcon, Inc. (Norcon), a party in interest with respect to the Plan, provided that the following conditions are met:

(a) The terms and conditions of the Sale will be at least as favorable to the Plan as those obtainable in an arm's length transaction with an unrelated party;

(b) Norcon will pay the greater of $2,940,000 or the fair market value of the Property on the date of the Sale as established by a qualified, independent appraiser;

(c) The Sale will be a one-time transaction for cash;

(d) The Plan will pay no fees or commissions with respect to the Sale; and

(e) An independent fiduciary acting on behalf of the Plan has reviewed the terms of the Sale and has represented that the transaction is in the best interest of the Plan and protective of the Plan's participants and beneficiaries.

Summary of Facts and Representations

1. VECO is an engineering, procurement, management, and construction company which is located in Anchorage, Alaska and incorporated in Delaware. Norcon is a wholly-owned subsidiary of VECO and is an electrical contracting company. Norcon is also located in Anchorage, Alaska.

2. VECO is the sponsor of the Plan. The Plan is a frozen profit sharing plan having 1,866 participants and approximately $2,959,432 in total assets, as of June 15, 1998. The trustees of the Plan (the Trustees) are all employees of VECO or an affiliate thereof. On January 1, 1992, VECO discontinued contributions to the Plan and the Plan received a favorable termination letter from the Internal Revenue Service on February 25, 1997.

3. The Property, which accounts for approximately 99% of the Plan's total assets, is comprised of approximately 40 acres of unimproved real property located at the southwest corner of King Street and 100th Avenue in Anchorage, Alaska. The Property has not been used by, or generated income for, the Plan. The Property was acquired by the Plan for investment purposes on February 6, 1981 for $1,917,363 from the Ninth Anchorage Limited Partnership (Ninth Anchorage), an unrelated party. Of this amount, the Plan paid Ninth Anchorage $288,219 in cash and obtained a promissary note (the Note) from Ninth Anchorage for the balance of $1,629,144.

4. The Plan has incurred certain holding costs as a result of its ownership of the Property. The applicant represents that the Plan has incurred certain interest expenses (the Interest Expenses) as a result of the Note. The applicant represents that, from 1981 until the Note was paid off in 1989, the Plan incurred a total of $1,213,646 in Interest Expenses.

The applicant represents that VECO has paid all of the Interest Expenses (the Interest Expense Payments) on behalf of the Plan. The applicant represents that VECO made the Interest Expense Payments directly to Ninth Anchorage and treated the Interest Expense Payments as contributions by VECO to

the Plan.[1] The applicant additionally represents that VECO did not take any additional deductions with respect to the Interest Expenses Payments.

The Plan has additionally incurred certain real estate taxes (the Real Estate Taxes) with respect to its ownership of the Property. The applicant represents that the Plan has incurred a total of $497,599 in Real Estate Taxes as a result of its ownership of the Property.

The applicant represents that from 1981 to present, VECO has paid, and continues to pay, all of the Real Estate Taxes on behalf of the Plan (the Real Estate Tax Payments). The applicant represents that the Real Estate Tax Payments were made directly by VECO to the taxing authority. The Applicant represents that, from 1981 to 1991, VECO treated the Real Estate Tax Payments as a contribution by VECO to the Plan with no further deductions taken by VECO with respect to the Real Estate Tax Payments.[2]

5. In 1995, the Trustees were informed by the Department of Labor's Seattle District Office (the District Office) that a sale of the Property by the Plan was necessary to diversify the Plan's assets in accordance with the requirements of the Act. As a result, the District Office and the Trustees reached a settlement agreement pursuant to PTE 94–71 (59 FR 51216, October 7, 1994) whereby VECO would purchase the Property from the Plan provided that VECO was able to meet certain conditions.

In a letter dated April 8, 1996, the District Office stated that it had decided not to authorize the proposed sale of the property to VECO. This decision was the result of the receipt by the District Office of negative comments from the Plan's participants in response to the proposed transaction. The District Office notified VECO that a sale of the Property was still necessary and any future sale of the Property would require the oversight of an independent fiduciary acting on behalf of the Plan. As a result of the District Office's decision, the proposed sale of the Property to VECO was abandoned.

6. The applicant now seeks an exemption for the sale of the Property by the Plan to VECO's subsidiary, Norcon. The Sale will involve the oversight of an independent fiduciary. Pursuant to this, Norcon and the Plan entered into a purchase and sale agreement for the Property (the Sale Agreement) on March 13, 1998. The Sale Agreement involves Norcon's purchase of the Property for the greater of $2,940,000 or the fair market value of the Property at the time of the Sale, as determined by a qualified, independent appraiser. The Sale Agreement is contingent on the grant of an exemption by the Department.

The applicant represents that in addition to the proposed sale of the Property by the Plan to VECO, the Plan is still trying to sell the Property on the open market. The applicant represents that in the event the Plan receives an offer for the Property in excess of the amount in the Sale Agreement, the Sale Agreement has reserved to Norcon the right to meet or exceed the amount that was offered. Thus, the applicant represents that, at a minimum, any sale of the Property by the Plan to Norcon will occur at the greater of $2,940,000 or the fair market value of the Property as of the date of the Sale.

7. The Property was appraised on June 5, 1997 by Jerry Smith (Mr. Smith) for the ACCUVAL–RESCO Appraisal Company (ACCUVAL–RESCO), an appraisal company independent of both Norcon and VECO. Mr. Smith, an appraiser certified in the State of Alaska, used the sales comparison approach in his valuation of the Property and compared the Property to five parcels of land located near the Property and the subject of recent sales. Based on these comparisons, Mr. Smith concluded that the value of the Property, as of June 3, 1997, was $2,940,000.[3]

8. The Plan hired an independent fiduciary, Al Tamagni (Mr. Tamagni) of Pension Services International, Inc. (PSI) to act on the Plan's behalf during any sale of the Property. Mr. Tamagni, who is the President of PSI, represents that he is independent of both Norcon and VECO. Mr. Tamagni additionally represents that he has several years of experience in matters involving qualified pension plans, including investment transactions similar to the Sale and the Sale Agreement. Mr. Tamagni represents further that he understands his duties and responsibilities as a fiduciary under ERISA and has accepted them.

Mr. Tamagni represents that he has reviewed the terms of both the Sale and the Sale Agreement. Mr. Tamagni represent that, based on his analysis of the Sale Agreement, he believes that the terms of the Sale and the Sale Agreement are protective of the rights of the participants and beneficiaries of the Plan. Mr. Tamagni additionally represents that, based on his analysis of the terms of the Sale, he believes that the Sale is in the best interests of the Plan's participants and beneficiaries.

9. In summary, the applicant represent that the proposed transaction satisfies the criteria of section 408(a) of the Act because:

(a) The terms and conditions of the Sale will be at least as favorable to the Plan as those obtainable in an arm's length transaction with an unrelated party;

(b) Norcon will pay the greater of $2,940,000 or the fair market value of the Property on the date of Sale as established by a qualified, independent appraiser;

(c) The Sale will be a one-time transaction for cash;

(d) The Plan will pay no fees or commissions with respect to the Sale; and

(e) An independent fiduciary acting on behalf of the Plan, Mr. Tamagni, has reviewed the terms of the Sale and has represented that the transaction is in the best interest of the Plan and protective of the Plan's participants and beneficiaries.

FOR FURTHER INFORMATION CONTACT: Christopher J. Motta of the Department, telephone (202) 219–8883 (this is not a toll free number).

Citibank, N.A. (Citibank), and Salomon Smith Barney Inc. (SSB) Located in New York, NY

[Application No. D–10674]

Proposed Exemption

The Department is considering granting an exemption under the authority of section 408(a) of the Act and section 4975(c)(2) of the Code and in accordance with the procedures set forth in 29 CFR Part 2570, subpart B (55 FR 32836, 32847, August 10, 1990). If the exemption is granted, the restrictions of sections 406(a)(1)(A) through (D) and 406(b)(1) and (2) of the Act and the sanctions resulting from the application of section 4975 of the Code, by reason of section 4975(c)(1)(A) through (E) of the Code, shall not apply, effective October 8, 1998 to (1) the past and continued lending of securities to SSB and affiliated U.S. registered broker-dealers of SSB or Citibank (together, SSB/U.S.) and certain foreign affiliates (the Foreign Affiliates) of SSB and Citibank which are broker-dealers or banks based in the United Kingdom (SB/U.K.), Japan (SSB/Asia), Germany

[1] The Department expresses no opinion as to the appropriateness of VECO's treatment of these payments as contributions under Internal Revenue Code sections 162 and 404.

[2] See footnote 1.

[3] Several unsuccessful attempts mere made by the Trustees to sell the Property on the open market for $3,223,440. The Trustees marketed the Property at this price in order for the Plan to receive a net amount, after real estate commissions were taken into consideration, which was approximate to the Property's appraised value.

(SSB/Germany), Canada (SSB/Canada) and Australia (SSB/Australia), including their affiliates or successors,[4] by employee benefit plans (the Client Plans) or commingled investment funds holding Client Plan assets, for which Citibank or any U.S. affiliate of Citibank, acts as securities lending agent (or sub-agent), including those Client Plans for which Citibank also acts as directed trustee or custodian of the securities being lent; and (2) to the receipt of compensation by Citibank or any U.S. affiliate of Citibank in connection with these transactions, provided that the following conditions are met:

(a) For each Client Plan, neither Citibank, SSB nor any of their affiliates either has or exercises discretionary authority or control with respect to the investment of the Client Plan assets involved in the transaction, or renders investment advice (within the meaning of 29 CFR 2510.3–21(c)) with respect to those assets.

(b) Any arrangement for Citibank to lend Client Plan securities to SSB in either an agency or sub-agency capacity is approved in advance by a Client Plan fiduciary who is independent of SSB and Citibank.[5] In this regard, the independent Client Plan fiduciary also approves the general terms of the securities loan agreement (the Loan Agreement) between the Client Plan and SSB, although the specific terms of the Loan Agreement are negotiated and entered into by Citibank and Citibank acts as a liaison between the lender and the borrower to facilitate the lending transaction.

(c) The terms of each loan of securities by a Client Plan to SSB is at least as favorable to such Client Plans as those of a comparable arm's length transaction between unrelated parties.

(d) A Client Plan may terminate the agency or sub-agency arrangement at any time without penalty to such Client Plan on five business days notice.

(e) The Client Plan receives from SSB (either by physical delivery or by book entry in a securities depository located in the United States, wire transfer or similar means) by the close of business on or before the day the loaned securities are delivered to SSB, collateral consisting of cash, securities issued or guaranteed by the United States Government or its agencies or instrumentalities, or irrevocable United States bank letters of credit issued by a person other than Citibank, SSB or an affiliate thereof, or any combination thereof, or other collateral permitted under PTE 81–6, as it may be amended or superseded.

(f) As of the close of business on the preceding business day, the fair market value of the collateral initially equals at least 102 percent of the market value of the loaned securities and, if the market value of the collateral falls below 100 percent, SSB delivers additional collateral on the following day such that the market value of the collateral again equals at least 102 percent.

(g) Prior to entering into the Loan Agreement, SSB furnishes Citibank its most recently available audited and unaudited statements, which is, in turn, provided to a Client Plan, as well as a representation by SSB, that as of each time it borrows securities, there has been no material adverse change in its financial condition since the date of the most recently-furnished statement that has not been disclosed to such Client Plan; provided, however, that in the event of a material adverse change, Citibank does not make any further loans to SSB unless an independent fiduciary of the Client Plan is provided notice of any material adverse change and approves the loan in view of the changed financial condition.

(h) In return for lending securities, the Client Plan either—

(1) Receives a reasonable fee, which is related to the value of the borrowed securities and the duration of the loan; or

(2) Has the opportunity to derive compensation through the investment of cash collateral. (Under such circumstances, the Client Plan may pay a loan rebate or similar fee to SSB, if such fee is not greater than the fee the Client Plan would pay in a comparable arm's length transaction with an unrelated party.)

(i) All procedures regarding the securities lending activities conform to the applicable provisions of Prohibited Transaction Exemptions PTE 81–6 and PTE 82–63 as such class exemptions may be amended or superseded as well as to applicable securities laws of the United States, the United Kingdom, Japan, Germany, Canada or Australia.

(j) Each SSB borrower indemnifies and holds harmless each lending Client Plan in the United States against any and all losses, damages, liabilities, costs and expenses (including attorney's fees) which the Client Plan may incur or suffer directly arising out of the use of securities of such Client Plan by such SSB borrower or the failure of such borrower to return such securities to the Client Plan. In the event that the Foreign Affiliate defaults on a loan, Citibank, as agent for the lending Client Plan, will liquidate the loan collateral to purchase identical securities for the Client Plan. With respect to a default by a Foreign Affiliate, if the collateral is insufficient to accomplish such purchase, Citibank will indemnify the Client Plan for any shortfall in the collateral plus interest on such amount and any transaction costs incurred. Alternatively, with respect to a default by the Foreign Affiliate, if such identical securities are not available on the market, Citibank will pay the Client Plan cash equal to (1) the market value of the borrowed securities as of the date they should have been returned to the Client Plan, plus (2) all the accrued financial benefits derived from the beneficial ownership of such loaned securities as of such date, plus (3) interest from such date to the date of payment. (The amounts paid shall include the cash collateral or other collateral that is liquidated and held by Citibank on behalf of the Client Plan.)

(k) The Client Plan receives the equivalent of all distributions made to holders of the borrowed securities during the term of the loan, including, but not limited to, cash dividends, interest payments, shares of stock as a result of stock splits and rights to purchase additional securities, or other distributions.

(l) Prior to the approval of the lending of its securities to SSB by a new Client Plan, copies of the notice of proposed exemption (the Notice) and the final exemption are provided to such Client Plan.

(m) Each Client Plan receives monthly reports with respect to its securities lending transactions, including, but not limited to the information described in Representation 28 of the Notice so that an independent fiduciary of the Client Plan may monitor such transactions with SSB.

(n) Only Client Plans with total assets having an aggregate market value of at least $50 million are permitted to lend securities to SSB; provided, however, that—

(1) In the case of two or more Client Plans which are maintained by the same employer, controlled group of corporations or employee organization (the Related Client Plans), whose assets are commingled for investment purposes in a single master trust or any other entity the assets of which are ''plan assets'' under 29 CFR 2510.3–101 (the Plan Asset Regulation), which entity is engaged in securities lending

[4] Unless otherwise noted, SSB/U.S. and the Foreign Affiliates are collectively referred to as SSB.

[5] The Department, herein, is not providing exemptive relief for securities lending transactions engaged in by primary lending agents, other than Citibank and its affiliates, beyond that provided pursuant to Prohibited Transaction Exemption (PTE) 81–6 (46 FR 7527, January 23, 1981, as amended at 52 FR 18754, May 19, 1987) and PTE 82–63 (47 FR 14804, April 6, 1982).

arrangements with SSB, the foregoing $50 million requirement shall be deemed satisfied if such trust or other entity has aggregate assets which are in excess of $50 million; provided that if the fiduciary responsible for making the investment decision on behalf of such master trust or other entity is not the employer or an affiliate of the employer, such fiduciary has total assets under its management and control, exclusive of the $50 million threshold amount attributable to plan investment in the commingled entity, which are in excess of $100 million.

(2) In the case of two or more Client Plans which are not maintained by the same employer, controlled group of corporations or employee organization (the Unrelated Client Plans), whose assets are commingled for investment purposes in a group trust or any other form of entity the assets of which are ''plan assets'' under the Plan Asset Regulation, which entity is engaged in securities lending arrangements with SSB, the foregoing $50 million requirement is satisfied if such trust or other entity has aggregate assets which are in excess of $50 million (excluding the assets of any Client Plan with respect to which the fiduciary responsible for making the investment decision on behalf of such group trust or other entity or any member of the controlled group of corporations including such fiduciary is the employer maintaining such Client Plan or an employee organization whose members are covered by such Client Plan). However, the fiduciary responsible for making the investment decision on behalf of such group trust or other entity—

(i) Has full investment responsibility with respect to plan assets invested therein; and

(ii) Has total assets under its management and control, exclusive of the $50 million threshold amount attributable to plan investment in the commingled entity, which are in excess of $100 million.

(In addition, none of the entities described above are formed for the sole purpose of making loans of securities.)

(o) With respect to each successive two-week period, on average, at least 50 percent or more of the outstanding dollar value of securities loans negotiated on behalf of Client Plans will be to unrelated borrowers.

(p) In addition to the above, all loans involving the Foreign Affiliates have the following supplemental requirements:

(1) Such Foreign Affiliate is registered as a broker-dealer or bank with—

(i) The Securities and Futures Authority of the United Kingdom (the Securities and Futures Authority) in the case of SB/U.K.;

(ii) The Ministry of Finance and the Tokyo Stock Exchange in the case of SSB/Asia;

(iii) The Deutsche Bundesbank and the Federal Banking Supervisory Authority (Bundesaufsichtsamt fuer das Kreditwesen, hereinafter referred to as the BAK) in the case of SSB/Germany;

(iv) The Ontario Securities Commission and the Investment Dealers Association in the case of SSB/Canada; and

(v) The Australian Securities & Investments Commission and the Australian Stock Exchange Limited in the case of SSB/Australia.

(2) Such broker-dealer or bank is in compliance with all applicable rules and regulations thereof as well as with all requirements of Rule 15a–6 (17 CFR 240.15a–6) under the Securities Exchange Act of 1934 (the 1934 Act) which provides foreign broker-dealers and banks a limited exemption from United States registration requirements and interpretations and amendments thereof to Rule 15a-6 by the Securities and Exchange Commission (the SEC), to the extent applicable;

(3) All collateral is maintained in United States dollars or dollar-denominated securities or letters of credit;

(4) All collateral is held in the United States and Citibank maintains the situs of the securities Loan Agreements in the United States under an arrangement that complies with the indicia of ownership requirements under section 404(b) of the Act and the regulations promulgated under 29 CFR 2550.404(b)–1; and

(5) The Foreign Affiliate provides SSB (i.e., Salomon Smith Barney Inc.) a written consent to service of process in the United States for any civil action or proceeding brought in respect of the securities lending transaction, which consent provides that process may be served on such borrower by service on SSB (i.e., Salomon Smith Barney Inc.).

(q) Citibank and its affiliates maintain, or cause to be maintained within the United States for a period of six years from the date of such transaction, in a manner that is convenient and accessible for audit and examination, such records as are necessary to enable the persons described in paragraph (r)(1) to determine whether the conditions of the exemption have been met, except that—

(1) A prohibited transaction will not be considered to have occurred if, due to circumstances beyond the control of Citibank and/or its affiliates, the records are lost or destroyed prior to the end of the six year period; and

(2) No party in interest other than Citibank shall be subject to the civil penalty that may be assessed under section 502(i) of the Act, or to the taxes imposed by section 4975(a) and (b) of the Code, if the records are not maintained, or are not available for examination as required below by paragraph (r)(1).

(r)(1) Except as provided in subparagraph (r)(2) of this paragraph and notwithstanding any provisions of subsections (a)(2) and (b) of section 504 of the Act, the records referred to in paragraph (q) are unconditionally available at their customary location during normal business hours by:

(i) Any duly authorized employee or representative of the Department, the Internal Revenue Service or the SEC;

(ii) Any fiduciary of a participating Client Plan or any duly authorized representative of such fiduciary;

(iii) Any contributing employer to any participating Client Plan or any duly authorized employee representative of such employer; and

(iv) Any participant or beneficiary of any participating Client Plan, or any duly authorized representative of such participant or beneficiary.

(2) None of the persons described above in paragraphs (r)(1)(ii)–(r)(1)(iv) of this paragraph (r)(1) are authorized to examine the trade secrets of SSB or commercial or financial information which is privileged or confidential.

EFFECTIVE DATE: If granted, this proposed exemption will be effective as of October 8, 1998.

Preamble

In April 1998, the Travelers Group (Travelers) and Citicorp announced a proposed merger (the Merger) whereby Citicorp would be merged into a subsidiary of Travelers and Travelers would become a bank holding company and change its name to ''Citigroup Inc.'' The Merger, which was subject to approval by shareholders of each company and various regulatory entities, occurred on October 8, 1998.

Following the Merger, some of the borrowers with which Citibank may have transacted business as securities lending agent included certain broker-dealers affiliated with Travelers and other entities which were not affiliated with Citibank prior to the Merger. Also included in this group were certain affiliates with which Citibank, as securities lending agent, had not previously engaged in securities loans on behalf of Client Plans. Although Citibank does not lend Client Plan securities to any of its current affiliates, upon consummation of the Merger, loans to SSB entity borrowers made on

behalf of employee benefit plans for which Citibank acts as securities lending agent would then constitute loans to affiliates of Citibank which would be in violation of the Act.

Rather than unwind the securities loans prior to the Merger, Citibank and SSB have requested an individual exemption to continue the pre-existing lending arrangement. If granted, the proposed exemption would be effective as of the date of the Merger. In addition, the exemption would apply to successors in interest to U.S.-based affiliates and Foreign Affiliates of SSB or Citibank, provided the successors remain affiliates of such entities.

Summary of Facts and Representations

1. The parties to the transactions are described as follows:

(a) *SSB*, a Delaware corporation, is a subsidiary of Salomon Smith Barney Holdings, Inc., a Delaware Corporation, which in turn, is a subsidiary of Travelers and an affiliate of Citibank since the Merger of October 8, 1998. SSB is one of the largest full-line investment service firms in the United States. It is registered with and regulated by the SEC as a broker-dealer and as a futures commission merchant with the Commodities Futures Trading Commission. It is a member of the New York Stock Exchange and other principal securities exchanges in the United States. It is also a member of the National Association of Securities Dealers, Inc. As of December 31, 1997, Travelers had approximately $387 billion in assets and approximately $21 billion in shareholders' equity.

Acting as principal, SSB actively engages in the borrowing and lending of securities, with daily outstanding loan volume averaging several billion dollars. SSB utilizes borrowed securities to satisfy its trading requirements or to re-lend to other broker-dealers and others who need a particular security for various periods of time. All borrowings by SSB conform to the Federal Reserve Board's Regulation T. Pursuant to Regulation T, permitted borrowing purposes include making delivery of securities in the case of short sales, failures of a broker to receive securities it is required to deliver or other similar situations.

(b) *Citibank* is a wholly owned subsidiary of the Citicorp, a bank holding company organized in 1967 under the laws of the State of Delaware and also an affiliate of Travelers since the Merger of October 8, 1998. Originally organized on June 16, 1812, Citibank is a national banking association organized under the National Bank Act of 1864. As a member of the Federal Reserve System, Citibank is a ''bank'' as defined in both section 202(a)(2) of the Investment Advisers Act of 1940 (the Advisers Act) and section 581 of the Code.[6] Citibank is the second largest commercial bank in the United States and it maintains its principal place of business at 399 Park Avenue, New York, New York.

Citibank, a major provider of trustee and related fiduciary services, is one of the largest providers of custodial services in the United States, with more than $700 billion of assets under custody in the U.S. Such assets include those held by Citibank as a global custodian for U.S. pension plans, governmental plans and other tax-exempt investors.

In addition, Citibank provides securities lending services to many of its institutional clients. On behalf of such clients, Citibank negotiates the terms of loans with borrowers and otherwise acts as a liaison between the lender and the borrower to facilitate the lending transaction. Further, Citibank has responsibility for monitoring receipt of all required collateral and marking such collateral to market daily so that adequate levels of collateral are maintained and evaluating, on a continuous basis, the performance and creditworthiness of the borrowers of securities.

From time to time, Citibank may be retained by other securities lending agents to provide securities lending services in a sub-agent capacity with respect to portfolio securities of clients of such other lending agents. As securities lending agent, Citibank's role in the lending transactions parallels those under lending transactions for which it acts as primary lending agent on behalf of its clients.

(c) *SSB/U.S.* currently consists of SSB, Citicorp Investment Services Inc. (CISI) and Citicorp Securities Services, Inc. (CSSI). CISI is a wholly owned subsidiary of Citibank. CSSI is an indirect subsidiary of Citicorp. Both CISI and CSSI, which are located in New York, are U.S. registered broker-dealers. CSSI is also a member of the New York Stock Exchange as well as certain other principal exchanges in the United States.

(d) *The Foreign Affiliates* of SSB and Citibank include SB/U.K., SSB/Asia, SSB/Germany, SSB/Canada and SSB/Australia.

(i) *SB/U.K.* currently consists of Salomon Brothers U.K. Limited, Salomon Brothers U.K. Equity Limited and Salomon Brothers International. These broker-dealers, which are indirect subsidiaries of Travelers, are located in the United Kingdom and are subject to regulation by the Securities and Futures Authority. In the future, SB/U.K. also will include any other SSB or Citibank affiliate that is based in the United Kingdom.

(ii) *SSB/Asia* currently consists of Salomon Smith Barney Asia Limited, an indirect subsidiary of Travelers and a broker-dealer. SSB/Asia is located in Japan and is subject to regulation by the Ministry of Finance and the Tokyo Stock Exchange. In the future, SSB/Asia also will include any other SSB or Citibank affiliate that is based in Japan.

(iii) *SSB/Germany*, which currently consists of Salomon Brothers AG, a bank, is subject to regulation in Germany by the Deutsche Bundesbank and the BAK. In the future, SSB/Germany also will include any other SSB or Citibank affiliate that is based in Germany.

(iv) *SSB/Canada*, which currently consists of Salomon Smith Barney Canada Inc., a broker-dealer, is subject to regulation in Canada by the Ontario Securities Commission and the Investment Dealers Association. In the future, SSB/Canada also will include any other SSB or Citibank affiliate that is based in Canada.

(v) *SSB/Australia*, which currently consists of Salomon Smith Barney Australia Securities Pty Limited, a broker-dealer, is subject to regulation in Australia by the Australian Securities & Investments Commission and the Australian Stock Exchange Limited. In the future, SSB/Australia also will include or any other SSB or Citibank affiliate that is based in Australia.

2. Although not registered with the United States SEC as broker-dealers, the Foreign Affiliates of SSB that are broker-dealers are subject to the rules, regulations and membership requirements of their respective regulatory entities (the Foreign Broker-Dealer Regulatory Entities). For example, SB/U.K. is subject to the rules and regulatory requirements of the Securities and Futures Authority. SSB/Asia subject to the rules and regulatory requirements of the Ministry of Finance and the Tokyo Stock Exchange. SSB/Canada is subject to regulation by the Ontario Securities Commission and the Investment Dealers Association, a self-regulatory organization. SSB/Australia is subject to regulation primarily by the Australian Stock Exchange Limited and, on a more limited basis, by the Australian Securities and Investment Commission. Each of the

[6] In relevant part, section 202(a)(2) of the Advisers Act and section 581 of the Code state that a ''bank'' is a banking institution, bank or trust company incorporated and doing business under the laws of the United States.

aforementioned Foreign Affiliates is subject to rules relating to minimum capitalization, reporting requirements, periodic examinations, client money and safe custody rules and books and records requirements with respect to client accounts. These rules and regulations promulgated by the Foreign Broker-Dealer Regulatory Entities and the SEC share a common objective: The protection of the investor by the regulation of the securities industry. The rules of the Foreign Broker-Dealer Regulatory Entities (the Australian Stock Exchange Limited in the case of SSB/Australia) require each firm which employs registered representatives or registered traders to have a positive tangible net worth and be able to meet its obligations as they may fall due. In addition, the rules of the Foreign Broker-Dealer Regulatory Entities (the Australian Stock Exchange Limited in the case of SSB/Australia) set forth comprehensive financial resource and reporting/disclosure rules regarding capital adequacy. Further, to demonstrate capital adequacy, the rules of the Foreign Broker-Dealer Regulatory Entities (the Australian Stock Exchange Limited in the case of SSB/Australia) impose reporting/disclosure requirements on broker-dealers with respect to risk management, internal controls, and transaction reporting and recordkeeping requirements to the effect that required records must be produced at the request of the Foreign Broker-Dealer Regulatory Entities. Finally, the rules and regulations of the Foreign Broker-Dealer Regulatory Entities impose potential fines and penalties on broker-dealers which establish a comprehensive disciplinary system.

3. Similarly, SSB/Germany is subject to regulation in Germany by the Deutsche Bundesbank and the BAK. The Deutsche Bundesbank is the central bank of the German banking system and is responsible for the regulation of the money supply and credit supply to the economy, aimed at safeguarding the Deutsche Mark. The Bundesbank also provides for bank-based execution of domestic and foreign payments. The BAK is an independent federal institution with ultimate responsibility to the German Ministry of Finance. The BAK supervises the operations of banks, banking groups, financial holding groups and branches of foreign banks in Germany, and has the authority to (a) issue and withdraw banking licenses, (b) issue regulations on capital and liquidity requirements of banks, (c) request information and conduct investigations, (d) intervene in cases of inadequate capital or liquidity or in cases of endangered deposits or risk of bankruptcy by means of temporarily prohibiting certain banking transactions.

The BAK ensures that SSB/Germany has procedures for monitoring and controlling its world-wide activities through various statutory and regulatory standards. Among these standards are requirements for adequate internal controls, oversight, administration and financial resources. The BAK reviews compliance with these limitations on operations and internal control requirements through an annual audit performed by the year-end auditor and through special audits as ordered by the BAK and the respective State Central Bank auditors.

The BAK obtains information on the condition of SSB/Germany and its branches in Tokyo and Milan by requiring the submission of periodic, consolidated financial reports and through a mandatory annual report prepared by the auditor. The BAK also receives information regarding capital adequacy, country risk exposure and foreign exchange exposures from SSB/Germany.

German banking law mandates penalties to ensure correct reporting to the BAK. The auditors face penalties for gross violation of their auditing duties.

4. Aside from the protections afforded by the Foreign Broker-Dealer Regulatory Entities and, in the case of SSB/Germany, the Deutsche Bundesbank and the BAK, SSB represents that the Foreign Affiliates will comply with all applicable provisions of Rule 15a–6 of the 1934 Act.[7] Rule 15a–6 provides foreign broker-dealers with a limited exemption from SEC registration requirements and, as described below, offers additional protections. Specifically, Rule 15a–6 provides an exemption from U.S. broker-dealer registration for a foreign broker-dealer that induces or attempts to induce the purchase or sale of any security (including over-the-counter equity and debt options) by a ''U.S. institutional investor'' or a ''U.S. major institutional investor,'' provided that the foreign broker-dealer, among other things, enters into these transactions through a U.S. registered broker-dealer intermediary. The term ''U.S. institutional investor,'' as defined in Rule 15a–6(b)(7), includes an employee benefit plan within the meaning of the Act if (a) the investment decision is made by a plan fiduciary, as defined in section 3(21) of the Act, which is either a bank, savings and loan association, insurance company or registered investment adviser, or (b) the employee benefit plan has total assets in excess of $5 million, or (c) the employee benefit plan is a self-directed plan with investment decisions made solely by persons that are ''accredited investors'' as defined in Rule 501(a)(1) of Regulation D of the Securities Exchange Act of 1933, as amended. The term ''U.S. major institutional investor'' is defined in Rule 15a–6(b)(4) as a person that is a U.S. institutional investor that has total assets in excess of $100 million or an investment adviser registered under Section 203 of the Advisers Act that has total assets under management in excess of $100 million.[8]

5. SSB represents that under Rule 15a–6, a foreign broker-dealer that induces or attempts to induce the purchase or sale of any security by a U.S. institutional or major institutional investor must, among other things—

(a) Consent to service of process for any civil action brought by, or proceeding before, the SEC or any self-regulatory organization;

(b) Provide the SEC (upon request or pursuant to agreements reached between any foreign securities authority, including any foreign government, and the SEC or the U.S. Government) with any information or documents within the possession, custody or control of the foreign broker-dealer, any testimony of any such foreign associated persons, and any assistance in taking the evidence of other persons, wherever located, that the SEC requests and that relates to transactions effected pursuant to the Rule;

(c) Rely on the U.S. registered broker-dealer[9] through which the transactions with

[7] According to the applicants, section 3(a)(4) of the 1934 Act defines ''broker'' to mean ''any person engaged in the business of effecting transactions in securities for the account of others, but it does not include a bank. Section 3(a)(5) of the 1934 Act provides a similar exclusion for ''banks'' in the definition of the term ''dealer.'' However, section 3(a)(6) of the 1934 Act defines ''bank'' to mean a banking institution organized under the laws of the United States or a State of the United States. Further, Rule 15(a)(6)(b)(2) provides that the term ''foreign broker or dealer'' means ''any non-U.S. resident person * * * whose securities activities, if conducted in the United States, would be described by the definition of ''broker'' or ''dealer'' in sections 3(a)(4) or 3(a)(5) of the [1934] Act.'' Therefore, the test of whether an entity is a ''foreign broker'' or ''dealer'' is based on the nature of such foreign entity's activities and, with certain exceptions, only banks that are regulated by either the United States or a State of the United States are excluded from the definition of the term ''broker'' or ''dealer.'' Thus, for purposes of this exemption request, the applicants are willing to represent that they will comply with the applicable provisions and relevant SEC interpretations and amendments of Rule 15a–6.

[8] See also SEC No-Action Letter issued to Cleary, Gottlieb, Steen & Hamilton on April 9, 1997 (hereinafter, the April 9, No-Action Letter), expanding the definition of the term ''U.S. Major Institutional Investor.''

[9] The Foreign Affiliates, in lieu of relying on a U.S. broker-dealer and to the extent permitted by applicable U.S. securities law, may rely on a U.S. bank or trust company, including Citibank, to perform this role.

the U.S. institutional and major institutional investors are effected to (among other things):

(1) Effect the transactions, other than negotiating their terms;

(2) Issue all required confirmations and statements;

(3) As between the foreign broker-dealer and the U.S. registered broker-dealer, extend or arrange for the extension of credit in connection with the transactions;

(4) Maintain required books and records relating to the transactions, including those required by Rules 17a–3 (Records to be Made by Certain Exchange Members) and 17a–4 (Records to be Preserved by Certain Exchange Members, Brokers and Dealers) of the 1934 Act;

(5) Receive, deliver and safeguard funds and securities in connection with the transactions on behalf of the U.S. institutional investor or U.S. major institutional investor in compliance with Rule 15c3–3 of the 1934 Act (Customer Protection—Reserves and Custody of Securities);[10]

(6) Participate in certain oral communications (e.g., telephone calls) between the foreign associated person and the U.S. institutional investor (not the U.S. major institutional investor), and accompany the foreign associated person on certain visits with both U.S. institutional and major institutional investors. By virtue of this participation, the U.S. registered broker-dealer would become responsible for the content of all these communications.[11]

6. Citibank, as securities lending agent, pursuant to authorization from its client, will negotiate the terms of loans with borrowers pursuant to a client-approved form of Loan Agreement and will act as a liaison between the lender (and its custodian) and the borrower to facilitate the lending transaction. No loans of futures contracts will be involved. Citibank will have responsibility for monitoring receipt of all required collateral and marking such collateral to market daily so that adequate levels of collateral are maintained. Citibank also will monitor and evaluate on a continuing basis the performance and creditworthiness of the borrowers. Citibank may also act as a custodian or directed trustee with respect to the client's portfolio of securities being loaned.[12] Citibank may be authorized from time to time by a client to receive and hold pledged collateral and invest cash collateral pursuant to guidelines established by the client. All of Citibank's procedures for lending securities will be designed to comply with the applicable conditions of PTE 81–6 and PTE 82–63 (as such PTEs may be amended or superseded).[13]

7. Citibank may be retained occasionally by other securities lending agents to provide securities lending services in a sub-agent capacity with respect to portfolio securities of clients of such other lending agents. As securities lending sub-agent, Citibank's role under the lending transactions (i.e., negotiating the terms of loans with borrowers pursuant to a client-approved form of Loan Agreement and monitoring receipt of, and marking to market, required collateral) parallels those under lending transactions for which Citibank acts as primary lending agent on behalf of its clients.[14]

8. When a loan is collateralized with cash, the cash will be invested for the benefit and at the risk of the Client Plan, and resulting earnings (net of a rebate to the borrower) comprise the compensation to the Client Plan in respect of such loan. Where collateral consists of obligations other than cash, the borrower pays a fee (loan premium) directly to the lending Client Plan.

9. Accordingly, SSB and Citibank request an exemption that would be effective on October 8, 1998, the date of the Merger, with respect to (a) the lending of securities owned by employee benefit plans for which Citibank serves or will serve as securities lending agent or sub-agent (referred to herein as the Client Plans)[15] to SSB/U.S., SB/U.K., SSB/Asia, SSB/Canada, SSB/Germany and SSB/Australia, following disclosure of its affiliation with SSB, and (b) for the receipt of compensation by Citibank in connection with such transactions.[16] For each Client Plan, neither Citibank, SSB nor any affiliate will have discretionary authority or control or render investment advice over Client Plans' decisions concerning the acquisition or disposition of securities available for loan. Citibank's discretion will be limited to activities such as negotiating the terms of the securities loans with SSB and (to the extent granted by the Client Plan fiduciary) investing any cash collateral received in respect of the loans. Because Citibank, under the proposed arrangement, would have discretion to lend Client Plan securities to SSB, and because SSB is an affiliate of Citibank, the lending of securities to SSB by Client Plans for which Citibank serves as securities lending agent (or sub-agent) may be outside the scope of relief provided by PTE 81–6 and PTE 82–63. Further, loans to the Foreign Affiliates would be outside of the relief granted in PTE 81–6. Therefore, several safeguards, described more fully below, are incorporated in the application in order to ensure the protection of the Client Plan assets involved in the transactions. In addition, the applicants represent that the proposed lending program incorporates the conditions contained in PTE 81–6 and PTE 82–63 and will be in compliance with all applicable securities laws of the United States.

10. Where Citibank is the direct securities lending agent, a fiduciary of a Client Plan who is independent of Citibank and SSB will sign a securities lending agency agreement with Citibank (the Agency Agreement) before the Client Plan participates in a securities lending program. The Agency Agreement will, among other things, describe the operation of the lending program, prescribe the form of securities Loan Agreement to be entered into on behalf of the Client Plan with borrowers, specify the securities which are available to be lent, required margin and daily marking-to-market, and provide a list of permissible borrowers, including SSB. The Agency Agreement will also set forth the basis and rate for Citibank's compensation from the Client Plan for the performance of securities lending services.

11. The Agency Agreement will contain provisions to the effect that if SSB is designated by the Client Plan as an approved borrower (a) the Client

[10] Under certain circumstances described in the April 9, 1997 No-Action Letter (e.g., clearance and settlement transactions), there may be direct transfers of funds and securities between the Client Plan and a Foreign Affiliate. SSB notes that in such situations, the U.S. registered broker-dealer will not be acting as a principal with respect to any duties it is required to undertake pursuant to Rule 15a–6.

[11] Under certain circumstances, the foreign associated person may have direct communications and contact with the U.S. Institutional Investor. See April 9 SEC No-Action Letter.

[12] Citibank wishes to clarify the fact that an independent fiduciary of a Client Plan may also appoint Citibank or an affiliate of Citibank to manage cash collateral and to receive a reasonable and customary investment management fee, provided that the Client Plan fiduciary, after receiving full disclosure, approves the compensation arrangement, the terms of which will be described in a written agreement.

[13] PTE 81–6 provides an exemption under certain conditions from section 406(a)(1)(A) through (D) of the Act and the corresponding provisions of section 4975(c) of the Code for the lending of securities that are assets of an employee benefit plan to certain broker-dealers or banks which are parties in interest.

PTE 82–63 provides an exemption under specified conditions from section 406(b)(1) of the Act and section 4975(c)(1)(E) of the Code for the payment of compensation to a plan fiduciary for services rendered in connection with loans of plan assets that are securities.

[14] As noted previously, the Department is not providing exemptive relief herein for securities lending transactions that are engaged in by primary lending agents, other than Citibank and its affiliates, beyond that provided by PTEs 81–6 and 82–63.

[15] For the sake of simplicity, future references to Citibank's performance of services as securities lending agent should be deemed to include its parallel performance as securities lending sub-agent and references to Client Plans should be deemed to refer to plans for which Citibank is acting as sub-agent with respect to securities lending activities, unless otherwise indicated specifically or by the context of the reference.

[16] As noted above, the proposed exemption will also apply to successors in interest to U.S-based affiliates and Foreign Affiliates of SSB or Citibank, provided the successors remain affiliiates of such entities.

Plan will acknowledge that SSB is an affiliate of Citibank and (b) Citibank will represent to the Client Plan that each and every loan made to SSB on behalf of the Client Plan will be at market rates which are no less favorable to the Client Plan than a loan of such securities, made at the same time and under the same circumstances, to an unaffiliated borrower.

12. When Citibank is lending securities under a sub-agency arrangement, the primary lending agent will enter into a securities lending agency agreement (the Primary Lending Agreement) with a fiduciary of a Client Plan who is independent of such primary lending agent, Citibank or SSB, before the Client Plan participates in the securities lending program. The primary lending agent will be unaffiliated with Citibank or SSB. Citibank will not enter into a sub-agent arrangement unless the Primary Lending Agreement contains substantive provisions akin to those in the Agency Agreement relating to the description of the operation of the lending program, use of an approved form of Loan Agreement, specification of securities which are available to be lent, required margin and daily marking-to-market, and provision of a list of approved borrowers (which will include SSB). The Primary Lending Agreement will specifically authorize the primary lending agent to appoint sub-agents, to facilitate its performance of securities lending agency functions. Where Citibank is to act as such a sub-agent, the Primary Lending Agreement will expressly disclose that Citibank is to so act. The Primary Lending Agreement will also set forth the basis and rate for the primary lending agent's compensation from the Client Plan for the performance of securities lending services and will authorize the primary lending agent to pay a portion of its fee, as the primary lending agent determines in its sole discretion, to any sub-agent(s) it retains pursuant to the authority granted under such agreement.

Pursuant to its authority to appoint sub-agents, the primary lending agent will enter into a securities lending sub-agency agreement (the Sub-Agency Agreement) with Citibank under which the primary lending agent will retain and authorize Citibank, as sub-agent, to lend securities of the primary lending agent's Client Plans, subject to the same terms and conditions as are specified in the Primary Lending Agreement. Thus, for example, the form of Loan Agreement will be the same as that approved by the Client Plan fiduciary in the Primary Lending Agreement and the list of permissible borrowers under the Sub-Agency Agreement (which will include SSB) will be limited to those approved borrowers listed as such under the Primary Lending Agreement.

Citibank states that the Sub-Agency Agreement will contain provisions which are in substance comparable to those described in Representations 10 and 11 above, which would appear in an Agency Agreement in situations where Citibank is the primary lending agent. In this regard, Citibank will make the same representation in the Sub-Agency Agreement as described in Representation 10 above with respect to arm's length dealing with SSB. The Sub-Agency Agreement will also set forth the basis and rate for Citibank's compensation to be paid by the primary lending agent.

13. In all cases, Citibank will maintain transactional and market records sufficient to assure compliance with its representation that all loans to SSB are effectively at arm's length terms. Such records will be provided to the appropriate Client Plan fiduciary in the manner and format agreed to with the lending fiduciary, without charge to the Client Plan. A Client Plan may terminate the Agency Agreement (or the Primary Lending Agreement) at any time, without penalty to the Plan, on five business days notice.

14. Citibank will negotiate the Loan Agreement with SSB on behalf of Client Plans as it does with all other borrowers. An independent fiduciary of the Client Plan will approve the terms of the Loan Agreement. The Loan Agreement will specify, among other things, the right of the Client Plan to terminate a loan at any time and the Plan's rights in the event of any default by SSB. The Loan Agreement will explain the basis for compensation to the Client Plan for lending securities to SSB under each category of collateral. The Loan Agreement also will contain a requirement that SSB must pay all transfer fees and transfer taxes related to the security loans.

15. Before entering into the Loan Agreement, SSB will furnish its most recently available audited and unaudited financial statements to Citibank, and in turn, such statements will be provided to a Client Plan before the Client Plan is asked to approve the terms of the Loan Agreement. The Loan Agreement will contain a requirement that SSB must give prompt notice at the time of a loan of any material adverse changes in its financial condition since the date of the most recently furnished financial statements.[17] If any such changes have taken place, Citibank will not make any further loans to SSB unless an independent fiduciary of the Client Plan has approved the loan in view of the changed financial condition. Conversely, if SSB fails to provide notice of such a change in its financial condition, such failure will trigger an event of default under the Loan Agreement.

16. As noted above, the agreement by Citibank to provide securities lending services, as agent, to a Client Plan will be embodied in the Agency Agreement. The Client Plan and Citibank will agree to the arrangement under which Citibank will be compensated for its services as lending agent, including services as custodian and manager of the cash collateral received, prior to the commencement of any lending activity. Such agreed upon fee arrangement will be set forth in the Agency Agreement and thereby will be subject to the prior written approval of a fiduciary of the Client Plan who is independent of SSB and Citibank. Similarly, with respect to arrangements under which Citibank is acting as securities lending sub-agent, the agreed upon fee arrangement of the primary lending agent will be set forth in the Primary Lending Agreement, and such agreement will specifically authorize the primary lending agent to pay a portion of such fee, as the primary lending agent determines in its sole discretion, to any sub-agent, including

[17] With respect to capital adequacy rules for brokerage firms domiciled in the United States, including SSB, it is represented that such firms are subject to the capital adequacy rules of their respective regulatory agencies, i.e., the SEC, the New York Stock Exchange, the National Association of Securities Dealers and other self-regulatory authorities. If these brokerage firms fail to meet such requirements, they are subject to fines, penalties and possibly more stringent sanctions.

As for SB/U.K., SSB/Asia, SSB/Canada and SSB/Canada, which are subject to the capital adequacy provisions of their respective regulatory authorities, it is represented that such rules require the Foreign Affiliates to maintain, at all times, financial resources in excess of its financial resources requirement (the Financial Resources Requirement). For this purpose, financial resources include equity capital, approved subordinated debt and retained earnings, less deductions for illiquid assets. The Financial Resources Requirement includes capital requirements for market risk, credit risk, foreign exchange risk and large exposures. The rules of each applicable Foreign Broker-Dealer Regulatory Entity, require that if a firm's financial resources fall below a certain percentage (e.g., 120 percent with respect to the United Kingdom's Securities and Futures Authority and 150 percent with respect to the Ministry of Finance and the Tokyo Stock Exchange) of its Financial Resources Requirement, the such Foreign Broker-Dealer Regulatory Entity must be notified so that it can examine the terms of the firm's financial position and require an infusion of more capital, if needed. In addition, a breach of the requirement to maintain financial resources in excess of the Financial Resources Requirement may lead to sanctions by the applicable Foreign Broker-Dealer Regulatory Entity. If the breach is not promptly resolved, such Foreign Broker-Dealer Regulatory Entity may restrict the firm's activities.

Citibank, which is to provide securities lending services to the Client Plan.[18] The Client Plan will be provided with any reasonably available information which is necessary for the Client Plan fiduciary to make a determination whether to enter into or continue to participate under the Agency Agreement (or the Primary Lending Agreement) and any other reasonably available information which the Client Plan fiduciary may reasonably request.

17. Each time a Client Plan lends securities to SSB pursuant to the Loan Agreement, Citibank will reflect in its records the material terms of the loan, including the securities to be loaned, the required level of collateral, and the fee or rebate payable. The terms of the fee or rebate payable for each loan will be at least as favorable to the Client Plan as those of a comparable arm's length transaction between unrelated parties.

18. The Client Plan will be entitled to the equivalent of all interest, dividends and distributions on the loaned securities during the loan period. The Loan Agreement will provide that the Client Plan may terminate any loan at any time. Upon a termination, SSB will be contractually obligated to return the loaned securities to the Client Plan within five business days of notification or the customary settlement period in the respective jurisdiction, whichever is less (or such longer period of time permitted pursuant to a class exemption). If SSB fails to return the securities within the designated time, the Client Plan will have the right under the Loan Agreement to purchase securities identical to the borrowed securities and apply the collateral to payment of the purchase price and any other expenses of the Client Plan associated with the sale and/or purchase.

19. Citibank will establish each day a written schedule of lending fees[19] and rebate rates[20] in order to assure uniformity of treatment among borrowing brokers and to limit the discretion Citibank would have in negotiating securities loans to SSB. Loans to all borrowers of a given security on that day will be made at rates or lending fees on the relevant daily schedules or at rates or lending fees which may be more advantageous to the Client Plans. It is represented that in no case will loans be made to SSB at rates or lending fees that are less advantageous to the Client Plans than those on the schedule. The daily schedule of rebate rates will be based on the current value of the clients' reinvestment vehicles and on market conditions, as reflected by demand for securities by borrowers other than SSB. As with rebate rates, the daily schedule of lending fees will also be based on market conditions, as reflected by demand for securities by borrowers other than SSB, and will generally track the rebate rates with respect to the same security or class of security.

20. The rebate rates (in respect of cash-collateralized loans made by Client Plans) which are established will also take into account the potential demand for loaned securities, the applicable benchmark cost of funds indices (typically, Federal Funds, overnight repo rate or the like) and anticipated investment return on overnight investments which are permitted by the relevant Client Plan fiduciary. Further, the lending fees (in respect of loans made by Client Plans collateralized by other than cash) which are established will be set daily to reflect conditions as influenced by potential market demand.

21. Citibank will negotiate rebate rates for cash collateral payable to each borrower, including SSB, on behalf of a Client Plan. Where, for example, cash collateral derived from an overnight loan is intended to be invested in a generic repurchase agreement, any rebate fee determined with respect to an overnight repurchase agreement benchmark will be set below the applicable ''ask'' quotation therefor. Where cash collateral is derived from a loan with an expected maturity date (term loan) and is intended to be invested in instruments with similar maturities, the maximum rebate fee will be less than the expected investment return (assuming no investment default). With respect to any loan to SSB, Citibank will never negotiate a rebate rate with respect to such loan which would be expected to produce a zero or negative return to the Client Plan (assuming no default on the investments related to the cash collateral from such loan where Citibank has investment discretion over the cash collateral). Citibank represents that the written rebate rate established daily for cash collateral under loans negotiated with SSB will not exceed the rebate rate which would be paid to a similarly situated unrelated borrower with respect to a comparable securities lending transaction. Citibank will disclose the method for determining the maximum daily rebate rate as described above to an independent fiduciary of a Client Plan for approval before lending any securities to SSB on behalf of the Client Plan.

22. For collateral other than cash, the applicable loan fee in respect of any outstanding loan is reviewed daily for competitiveness and adjusted, where necessary, to reflect market terms and conditions (see Representation 24). With respect to each successive two-week period, on average, at least 50 percent or more of the outstanding dollar value of securities loans negotiated on behalf of Client Plans will be to unrelated borrowers so the competitiveness of the loan fee will be tested in the marketplace. Accordingly, loans to SSB should result in competitive rate income to the lending Client Plan. At all times, Citibank will effect loans in a prudent and diversified manner. While Citibank will normally lend securities to requesting borrowers on a ''first come, first served'' basis, as a means of assuring uniformity of treatment among borrowers, it should be recognized that in some cases it may not be possible to adhere to a ''first come, first served'' allocation. This can occur, for instance where (a) the credit limit established for such borrower by Citibank and/or the Client Plan has already been satisfied; (b) the ''first in line'' borrower is not approved as a borrower by the particular Client Plan whose securities are sought to be borrowed; and (c) the ''first in line'' borrower cannot be ascertained, as an operational matter, because several borrowers spoke to different Citibank representatives at or about the same time with respect to the same security.[21] In situations (a) and (b), loans would

[18] The foregoing provisions describe arrangements comparable to conditions (c) and (d) of PTE 82–63 which require that the payment of compensation to a ''lending fiduciary'' is made under a written instrument and is subject to prior written authorization of an independent ''authorizing fiduciary.'' In the event that a commingled investment fund will participate in the securities lending program, the special rule applicable to such funds concerning the authorization of the compensation arrangement set forth in condition (f) of PTE 82–63 will be satisfied.

[19] Citibank will adopt minimum daily lending fees for non-cash collateral payable by SSB to Citibank on behalf of a Client Plan. Citibank will submit the method for determining such minimum daily lending fees to an independent fiduciary of the Client Plan for approval before initially lending any securities to SSB on behalf of such Client Plan.

[20] Citibank will adopt separate maximum daily rebate rates with respect to securities loans collateralized with cash collateral. Such rebate rates will be based upon an objective methodology which takes into account several factors, including potential demand for loaned securities, the applicable benchmark cost of fund indices, and anticipated investment return on overnight investments permitted by the Client Plan's independent fiduciary. Citibank will submit the method for determining such maximum daily rebate rates to such fiduciary before initially lending any securities to SSB on behalf of the Client Plan.

[21] It is represented that the ''first come, first served'' allocation would not apply where Citibank is not acting as a securities lending agent, but rather is acting as, for example, a custodian to a Client Plan that has entered into an exclusive arrangement with the borrower. See PTE 96–56 (61 FR 37933, July 22, 1996) issued to Smith Barney, Inc.

normally be effected with the ''second in line.'' In situation (c), securities would be allocated equitably among all eligible borrowers.

23. The method of determining the daily securities lending rates (fees and rebates), the minimum lending fees payable by SSB and the maximum rebate payable to SSB will be specified in an exhibit attached to the Agency Agreement to be executed between the independent fiduciary of the Client Plan and Citibank in cases where Citibank is the direct securities lending agent.

24. If Citibank reduces the lending fee or increases the rebate rate on any outstanding loan to an affiliated borrower (except for any change resulting from a change in the value of any third party independent index with respect to which the fee or rebate is calculated), Citibank, by the close of business on the date of such adjustment, will provide the independent fiduciary of the Client Plan with notice that it has reduced such fee or increased the rebate rate to such affiliated borrower and that the Client Plan may terminate such loan at any time. In addition, Citibank will provide the independent fiduciary of the Client Plan with such information as the fiduciary may reasonably request regarding such adjustment.

25. Under the Loan Agreement, each SSB borrower will agree to indemnify and hold harmless the applicable Client Plan (including the sponsor and fiduciaries of such Client Plan) from any and all reasonably foreseeable damages, losses, liabilities, costs and expenses (including attorney's fees) which the Client Plan may incur or suffer arising in any way from the use by such borrower of the loaned securities or any failure of such borrower to deliver loaned securities in accordance with the provisions of the Loan Agreement or to otherwise comply with the terms of the Loan Agreement except to the extent that such losses or damages are caused by the Client Plan's negligence.

In the event the Foreign Affiliate defaults on a loan, Citibank will liquidate the loan collateral to purchase identical securities for the Client Plan. If the collateral is insufficient to accomplish such purchase,[22] Citibank will indemnify the Client Plan for any shortfall in the collateral plus interest on such amount and any transaction costs incurred. Alternatively, if such identical securities are not available on the market, Citibank will pay the Client Plan cash equal to the market value[23] of the borrowed securities as of the date they should have been returned to the Client Plan plus all interest and accrued financial benefits derived from the beneficial ownership of such loaned securities. Under such circumstances, Citibank will pay the Client Plan an amount equal to (a) the value of the securities as of the date such securities should have been returned to the Client Plan plus (b) all of the accrued financial benefits derived from the beneficial ownership of such loan securities as of such date, plus (c) interest from such date through the date of payment. (The amounts paid shall include the cash collateral or other collateral that is liquidated and held by Citibank on behalf of the Client Plan.)

26. The Client Plan will receive collateral from SSB by physical delivery, book entry in a U.S. securities depository, wire transfer or similar means by the close of business on or before the day the loaned securities are delivered to SSB. The collateral will consist of cash, securities issued or guaranteed by the U.S. Government or its agencies or irrevocable U.S. bank letters of credit (issued by a person other than Citibank, SSB or their affiliates) or such other types of collateral which might be permitted by the Department under a class exemption. The market value of the collateral on the close of business on the day preceding the day of the loan will be at least 102 percent of the market value of the loaned securities. The Loan Agreement will give the Client Plan a continuing security interest in and a lien on the collateral. Citibank will monitor the level of the collateral daily. If the market value of the collateral falls below 100 percent (or such greater percentage as agreed to by the parties) of that of the loaned securities, Citibank will require SSB to deliver by the close of business the next day sufficient additional collateral to bring the level back to at least 102 percent.

27. With respect to loans involving the Foreign Affiliates, the following additional conditions will be applicable: (a) all collateral will be maintained in United States dollars or dollar-denominated securities or letters of credit; (b) all collateral is held in the United States and Citibank maintains the situs of the securities loan agreements in the United States under an arrangement that complies with the indicia of ownership requirements under section 404(b) of the Act and the regulations promulgated under 29 CFR 2550.404(b)–1; and (c) the Foreign Affiliate provides SSB (i.e., Salomon Smith Barney Inc.) a written consent to service of process in the United States for any civil action or proceeding brought in respect of the securities lending transaction, which consent provides that process may be served on such borrower by service on SSB (i.e., Salomon Smith Barney Inc.).

28. Each Client Plan participating in the lending program will be sent a monthly transaction report. The monthly report will provide a list of all security loans outstanding and closed for a specified period. The report will identify for each open loan position, the securities involved, the value of the security for collateralization purposes, the current value of the collateral, the rebate or loan premium (as the case my be) at which the security is loaned, and the number of days the security has been on loan. In addition, if requested by the lending customer, Citibank will provide daily confirmations of securities lending transactions, and, with respect to monthly reports, if requested by the customer, Citibank will compare weekly or daily reports, setting forth for each transaction made or outstanding during the relevant reporting period, the loaned securities, the related collateral, rebates and loan premiums and such other information in such format as shall be agreed to by the parties. Further, prior to the approval by a new Client Plan of a securities lending program, SSB will provide a Client Plan fiduciary with copies of the proposed exemption and notice granting the exemption.

29. In order to provide the means for monitoring lending activity, the monthly report will compare rates on loans by the Client Plans to SSB and rates on loans to other brokers as well as the level of collateral on the loans. In this regard, the monthly report will show, on a daily basis, the market value of all outstanding security loans to SSB and to other borrowers. In addition, the monthly report will state the daily fees where collateral other than cash is utilized and will specify the details used to establish the daily rebate payable to all brokers where cash is used as collateral. The monthly report also will state, on a daily basis, the rates at which securities are loaned to SSB and the rates at which securities are loaned to other brokers. This statement will give an independent fiduciary information which can be compared to

[22] Of course, Citibank will not be responsible for any loss with respect to cash collateral caused by the Client Plan's investment thereof directed by or pursuant to guidelines set by the Client Plan unless it expressly agrees to such liability with the Client Plan.

[23] For purposes of this proposed exemption, the ''market value'' of securities, as of any date, shall be determined on the basis of the closing prices therefor as of the trading date (for the principal market in which the securities are traded) immediately preceding the day of valuation, such determination to be made by the independent pricing source identified to SSB by the Client Plan upon the request of SSB. Market value shall include accrued interest in the case of debt securities.

that contained in the daily rate schedule.

30. Only Client Plans with total assets having an aggregate market value of at least $50 million are permitted to lend securities to SSB. In the case of two or more Client Plans which are maintained by the same employer, controlled group of corporations or employee organization (i.e., the Related Client Plans), whose assets are commingled for investment purposes in a single master trust or any other entity the assets of which are ''plan assets'' under the Plan Asset Regulation), which entity is engaged in securities lending arrangements with SSB, the foregoing $50 million requirement will be satisfied if such trust or other entity has aggregate assets which are in excess of $50 million. However, if the fiduciary responsible for making the investment decision on behalf of such master trust or other entity is not the employer or an affiliate of the employer, such fiduciary must have total assets under its management and control, exclusive of the $50 million threshold amount attributable to plan investment in the commingled entity, which are in excess of $100 million.

In the case of two or more Client Plans which are not maintained by the same employer, controlled group of corporations or employee organization (i.e., the Unrelated Client Plans), whose assets are commingled for investment purposes in a group trust or any other form of entity the assets of which are ''plan assets'' under the Plan Asset Regulation, which entity is engaged in securities lending arrangements with SSB, the foregoing $50 million requirement will be satisfied if such trust or other entity has aggregate assets which are in excess of $50 million (excluding the assets of any Client Plan with respect to which the fiduciary responsible for making the investment decision on behalf of such group trust or other entity or any including such fiduciary is the employer maintaining such Client Plan or an employee organization whose members are covered by such Client Plan). However, the fiduciary responsible for making the investment decision on behalf of such group trust or other entity (a) must have full investment responsibility with respect to plan assets invested therein [24]; and (b) must have total assets under its management and control, exclusive of the $50 million threshold amount attributable to plan investment in the commingled entity, which are in excess of $100 million.

In addition, none of the entities described above must be formed for the sole purpose of making loans of securities.

31. In summary, the applicants represent that the described transactions have satisfied or will satisfy the statutory criteria for an exemption under section 408(a) of the Act because:

(a) The form of the Loan Agreement pursuant to which any loan is effected has been or will be approved by a fiduciary of the Client Plan who is independent of SSB and Citibank before a Client Plan lends any securities to SSB.

(b) The lending arrangements (1) will permit the Client Plans to lend to SSB and (2) will enable the Client Plans to diversify the list of eligible borrowers and earn additional income from the loaned securities on a secured basis, while continuing to receive any dividends, interest payments and other distributions due on those securities.

(c) The Client Plans have received or will receive sufficient information concerning SSB's financial condition before the Plan lends any securities to SSB.

(d) The collateral on each loan to SSB initially has been and will be at least 102 percent of the market value of the loaned securities, which is in excess of the 100 percent collateral required under PTE 81–6, and has been and will be monitored daily by Citibank.

(e) The Client Plans have received and will receive a monthly report which provides an independent fiduciary of the Client Plans with information on loan activity, fees, loan return/yield and the rates on loans to SSB as compared with loans to other brokers and the level of collateral on the loans.

(f) Citibank, SSB nor any affiliate has or will have discretionary authority or control over the Client Plan's acquisition or disposition of securities available for loan.

(g) The terms of the fee or rebate payable for each loan have been and will be at least as favorable to the Client Plans as those of a comparable arm's length transaction between unrelated parties.

(h) All of the procedures under the transactions have conformed or will conform to the applicable provisions of PTE 81–6 and PTE 82–63 and also have been and will be in compliance with the applicable securities laws of the United States, the United Kingdom, Japan, Germany, Canada and Australia.

Notice to Interested Persons

Notice of the proposed exemption will be provided to interested persons within 5 days of the publication of the notice of proposed exemption in the **Federal Register**. Such notice will be given to Client Plans that have outstanding securities loans with SSB. The notice will include a copy of the notice of proposed exemption as published in the **Federal Register** and a supplemental statement, as required pursuant to 29 CFR 2570.43(b)(2). The supplemental statement will inform interested persons of their right to comment on and/or to request a hearing with respect to the proposed exemption. Written comments and hearing requests are due within 35 days of the publication of the proposed exemption in the **Federal Register**.

FOR FURTHER INFORMATION CONTACT: Ms. Jan D. Broady of the Department, telephone (202) 219–8881. (This is not a toll-free number.)

State Bankshares Inc. 401(k) Profit Sharing Plan (the Plan), Located in Fargo, North Dakota

[Application No. D–10703]

Proposed Exemption

The Department is considering granting an exemption under the authority of section 408(a) of the Act and section 4975(c)(2) of the Code and in accordance with the procedures set forth in 29 CFR Part 2570, Subpart B (55 FR 32836, 32847, August 10, 1990). If the exemption is granted, the restrictions of sections 406(a), 406(b)(1) and (b)(2) of the Act and the sanctions resulting from the application of section 4975 of the Code, by reason of section 4975(c)(1)(A) through (E) of the Code, shall not apply to the proposed sale by the Plan of certain limited partnership interests (the Interests) to Northern Capital Trust Company (Northern), the Plan's trustee and a party in interest with respect to the Plan, for $93,552.93 in cash, provided the following conditions are satisfied: (a) The sale is a one-time transaction for cash; (b) no commissions are charged in connection with the transaction; (c) the Plan receives not less than the fair market value of the Interests at the time of the transaction; and (d) the fair market value of the Interests is determined by a qualified entity independent of the Plan and of Northern.

Summary of Facts and Representations

1. The Plan is a 401(k) profit sharing plan which is sponsored by State Bankshares Inc. (the Employer) of Fargo, North Dakota. The Plan currently has

[24] For purposes of this proposed exemption, the term ''full investment responsibility'' means that the fiduciary responsible for making investment decisions on behalf of the group trust or other form of entity, has and exercises discretionary management authority over all of the assets of the group trust or other plan assets entity.

144 participants and had assets of $5,637,308 as of September 30, 1998. The trustee of the Plan is Northern, a trust company located at 203 North 10th Street, Fargo, North Dakota. Northern has investment discretion for the Plan's assets.

2. In August 1993, the Plan purchased the Interests as an investment from an unrelated party (as discussed below). The Interests consist of a 4.2337% interest in the Courtyard Limited Partnership (the Partnership). The Partnership's sole asset is an apartment building known as ''Courtyard Apartments'' in St. Louis Park, Minnesota. The Plan paid $54,233.70 for the Interests in the Partnership. The investment was presented to Northern, as Plan trustee, by Regan Wieland Investment Co., whose name was later changed to Goldmark Investment Company (Goldmark), on behalf of the Partnership. Goldmark and the Partnership are independent of, and unrelated to, the Employer and Northern.

3. The Employer would like to permit employee directed investments and the use of a 24-hour telephone service to accommodate daily transfers by Plan participants of assets held in their individual accounts in the Plan. In order to be able to participate in the new daily valuation and transfer system, the Plan needs to divest itself of the Interests to ensure proper liquidity for all of the Plan's assets. In this regard, the applicant represents that it is necessary to transfer the Interests out of the Plan because the Interests cannot be valued on a daily basis.

4. Northern as Plan trustee has contacted Goldmark, the Managing Partner of the Partnership, to inform them that the Plan wishes to sell its Interests. Mr. Kenneth P. Regan of Goldmark has represented that the fair market value of the Plan's Interests would be approximately $93,000, if all of the partners were to sell their Partnership interests at the present time. However, in the event only one partner, such as the Plan, were to dispose its Interests, there would be discounts from the $93,000 value to reflect the lack of marketability and minority ownership in addition to sales costs. Goldmark estimates that these expenses would be in excess of $11,000. Thus, Goldmark states that the value of the Plan's Interests, if it were to sell such Interests alone, would be approximately $81,795. Goldmark based its valuation of the Partnership on a January 12, 1998 appraisal of the Courtyard Apartments that was conducted by Robert L. Fransen (Fransen), an independent real estate broker in Minneapolis, Minnesota. Fransen specializes in the brokerage of apartment properties.

5. The applicant has requested an exemption that would permit the Plan to sell the Interests to Northern for cash. No commissions or other fees would be charged in connection with the sale. Northern has represented that they are willing to pay the Plan $93,552.93 for the Interests, an amount which reflects the book value of the Interests (based on the current net value of the Courtyard Apartments as the Partnership's only asset).[25] This amount is more than the current fair market value of the Interests (i.e., $81,795) as determined by Goldmark.

6. In summary, the applicant represents that the proposed transaction satisfies the criteria contained in section 408(a) of the Act because: (a) The sale is a one-time transaction for cash; (b) no commissions or other fees will be charged in connection with the transaction; (c) the sales price for the Interests will be an amount, based on the book value of the Interests, which reflects more than the fair market value of the Interests as determined by Goldmark, the Managing Partner for the Partnership; and (d) Goldmark based its valuation of the Partnership on an appraisal of the Courtyard Apartments performed by Fransen, an independent real estate expert.

FOR FURTHER INFORMATION CONTACT: Gary H. Lefkowitz of the Department, telephone (202) 219–8881. (This is not a toll-free number.)

VonRoll Isola Savings Plan (the Plan), Located in Schenectady, New York

[Application No. D–10729]

Proposed Exemption

The Department is considering granting an exemption under the authority of section 408(a) of the Act and section 4975(c)(2) of the Code and in accordance with the procedures set forth in 29 CFR Part 2570, Subpart B (55 FR 32836, 32847, August 10, 1990). If the exemption is granted, the restrictions of sections 406(a), 406(b)(1) and (b)(2) of the Act and the sanctions resulting from the application of section 4975 of the Code, by reason of section 4975(c)(1)(A) through (E) of the Code, shall not apply to: (1) the making by State Street Bank and Trust Company (the Bank) of interest-free advances of cash (the Advances) to the Plan during the period from July 8, 1997 through June 22, 1998, in the aggregate amount of $824,812.60; and (2) the repayment of the Advances by the Plan, without interest, on June 22, 1998, provided the following conditions were satisfied:

(a) No interest or expense was incurred by the Plan in connection with the Advances;

(b) The proceeds of the Advances were used only to facilitate the payment of benefits (including participant loans and in-service withdrawals) to Plan participants, and to facilitate the making of investment transfers elected by Plan participants;

(c) The Advances were unsecured;

(d) The Plan participants who remained invested in the Plan's stable value fund, which consisted primarily of a Group Flexible Annuity Contract (the GIC) from the Travelers Insurance Company (Travelers), continued to receive the full contract rate on the full amount of the GIC;

(e) The Plan's sponsor was notified of the Advances;

(f) The repayment of the Advances was made at the direction of the Plan's sponsor and was restricted to amounts received from the proceeds of the installment payments made by Travelers under the GIC, and no other plan assets were used for that purpose;

(g) The Bank will maintain or cause to be maintained for a period of six years from the date of the granting of the exemption proposed herein the records necessary to enable the persons described in paragraph (h) to determine whether the conditions of this exemption have been met, except that:

(1) A prohibited transaction will not be considered to have occurred, if due to circumstances beyond the control of the Bank, the records are lost or destroyed prior to the end of the six year period; and

(2) No party in interest, other than the Bank, shall be subject to the civil penalty that may be assessed under section 502(i) of the Act, or to the taxes imposed by section 4975(a) and (b) of the Code, if the records are not maintained, or are not available for examination as required by paragraph (h); and

(h)(1) Except as provided in paragraph (h)(2) and notwithstanding any provisions of subsections (a)(2) and (b) of section 504 of the Act, the records referred to in paragraph (g) are unconditionally available at their customary location for examination during normal business hours by:

(A) Any duly authorized employee or representative of the Department or the Internal Revenue Service;

[25] The current net value of the Courtyard Apartments is $2,209,722, based on Fransen's appraisal of the gross value less outstanding liabilities and other costs. Thus, since the Interests represent a 4.2337% interest in the Partnership, the Interests have a book value of approximately $93,553 (i.e., $2,209,722 × .042337 = $93,553).

(B) Any fiduciary of the Plan, or any duly authorized employee or representative of such fiduciary; and

(C) any participant or beneficiary of the Plan or duly authorized representative of such participant or beneficiary;

(2) None of the persons described in paragraph (h)(1)(B) and (h)(1)(C) shall be authorized to examine trade secrets of the Bank or commercial or financial information which is privileged or confidential.

EFFECTIVE DATES: If the proposed exemption is granted, the exemption will be effective from July 8, 1997 through June 22, 1998.

Summary of Facts and Representations

1. The Bank is a Massachusetts trust company that provides trustee, custodial, investment management, participant recordkeeping and other related services to employee benefit plans. vonRoll isola USA, Inc. (VRI), f/k/a Insulating Materials Incorporated, is a New York corporation that sponsors the Plan. The Plan is a qualified profit sharing plan under section 401(a) of the Code which contains a qualified cash or deferred arrangement as described in Code section 401(k). The Plan was most recently amended and restated effective April 1, 1997. The Plan currently has 182 participants and beneficiaries and had assets with a total fair market value of approximately $8,295,000 as of June 30, 1998.

In March, 1997, the Plan entered into a Benefit Plan Recordkeeping Services Contract and a Defined Contribution Plans Master Trust Agreement with the Bank, pursuant to which the Bank was appointed as trustee and recordkeeper for the Plan, effective July 1, 1997. As a result, the Plan's interests were transferred to the Bank for the Bank to hold as the Plan's new trustee, as of July 1, 1997. These agreements between the Plan and the Bank remain effective. The applicant represents that the Bank's role as Plan trustee and recordkeeper has made it a service provider and party in interest with respect to the Plan at all times since July 1, 1997.

2. Prior to July 1, 1997, the Plan offered six investment options into which Plan participants could direct their investments. One of these investment options was a so-called ''stable value'' fund which consisted of the GIC. The Plan had purchased the GIC from Travelers on June 22, 1993. On and after January 1, 1997, and in anticipation of the transfer of the Plan's assets to the Bank, no new Plan assets were allowed to be invested in the GIC. At the time of the transfer of the Plan's assets to the Bank on July 1, 1997, all assets of the Plan, except for the assets invested in the GIC (which amounted to approximately 40% of the total Plan assets at the time), were transferred to and invested in five new investment options selected by VRI. These options consisted of five different mutual funds. In addition, VRI designated, as a sixth investment option, a ''stable value'' fund to be managed by the Bank (the Stable Value Fund). Despite the lack of benefit responsiveness of the GIC, it was included in the Stable Value Fund and, at the outset, represented substantially all of the assets of that Fund.[26] No amounts deposited in the Stable Value Fund after July 1, 1997 were invested in the GIC; rather, all such amounts were held in a cash buffer to provide liquidity for any additional transfers by Plan participants out of that fund.

3. The GIC was issued by Travelers on June 22, 1993. It was not a ''benefit responsive contract'' and by its terms severely restricted transfers out of the contract for benefit payments to, or investment transfers by, participants.[27] The GIC initially was subject to a surrender charge for a period of ten years. In an attempt to address the liquidity issues created by the lack of benefit responsiveness and given the anticipated transfer of the Plan's assets to the Bank in July, 1997, the GIC was renegotiated by VRI and Travelers in February, 1997. As a result, the parties agreed that the contract would be liquidated in a series of annual installment payments by Travelers to the Plan beginning in June, 1997 and continuing through June, 2001.

4. On July 8, 1997, eight days after the Plan's assets were transferred to the Bank, the liquidity available under the Stable Value Fund (including the June, 1997 installment payment made by Travelers to the Plan pursuant to the liquidation agreement) was depleted. This rapid and unanticipated depletion of liquidity resulted from the very high level of investment transfers elected by Plan participants in conjunction with the transfer of the Plan's assets to the Bank. The applicant states that these investment transfers were the result of the new investment options available to Plan participants after the Plan's assets were transferred to the Bank. To meet the liquidity requirements created by the Plan participants' elections to make substantial transfers of their assets out of the Stable Value Fund, the Bank made the Advances to the Plan on an interest-free and unsecured basis. The Bank continued to make the Advances to the Plan as needed for these purposes until June 22, 1998. All of the Advances were made in cash. The total amount of the Advances was $824,812.60. The existence and amount of all such Advances was communicated to, and discussed with, VRI periodically during the period they were made.

5. The Bank did not at any time charge the Plan any interest on the Advances it made to the Plan. By contrast, the GIC continued to earn interest at the contract rate, which interest earnings were allocated to the accounts of those Plan participants who continued to be invested in the Stable Value Fund. Thus, the Advances made by the Bank facilitated the ability of the Plan's participants who had an investment in the Stable Value Fund to receive timely benefit payments and make investment transfers without being limited by the illiquidity of the GIC. In addition, the Advances provided Plan participants who elected to stay in the Stable Value Fund with assurances that the Fund would remain a viable investment option during this period and that their Plan accounts would continue to receive all interest payments due under the GIC.

6. On June 22, 1998, pursuant to further negotiations between VRI and Travelers, Travelers advanced a payment of $1,073,745.44 to the Plan. This amount represented 100% of the June 1998 and June 1999 installment payments due to the Plan under the renegotiated GIC. At the direction of VRI, this cash amount was used by the Plan to repay the entire amount of the Advances from the Bank, with the remainder creating a cash buffer for future benefit payments from the Stable Value Fund. The advance payment on the GIC by Travelers was subject to an early withdrawal charge equal to $60,398.19. VRI and a Plan service provider[28] in the aggregate paid Travelers $43,266 of this early withdrawal charge, with the result that the Plan actually paid only $17,132.19

[26] Although the GIC was included by the Bank in the Stable Value Fund, VRI retained responsibility for managing this asset.

[27] During the period prior to January 1, 1997, this lack of benefit responsiveness was generally offset by the availability of new cash flow to this option. The applicant represents that as long as the sum of the contributions and investment transfers flowing into this investment option exceeded the sum of the benefit distributions and investment transfers out of this option, there was no need for any benefit responsiveness under the GIC. The Department is providing no opinion herein as to whether the acquisition and holding of the GIC by the Plan was either consistent with, or in violation of, the fiduciary responsibility provisions contained in Part 4 of Title I of the Act.

[28] The Plan's service provider was GE Investment Retirement Services, Inc. (GEIRS). GEIRS is a marketing affiliate of the Plan's mutual fund provider, GE Investment Management Incorporated, the sponsor of the mutual funds that have been offered to the Plan since July 1, 1997.

or approximately 28% of the early withdrawal charge.

7. In summary, the applicant represents that the subject transactions satisfied the criteria contained in section 408(a) of the Act for the following reasons: (a) no interest or expense was incurred by the Plan in connection with the Advances; (b) the proceeds of the Advances were used only to facilitate the payment of benefits (including participant loans and in-service withdrawals) to Plan participants, and to facilitate the making of investment transfers elected by Plan participants; (c) the Advances were unsecured; (d) the Plan participants who remained invested in the Stable Value Fund, which consisted primarily of the GIC from Travelers, continued to receive the full contract interest rate on the GIC; (e) VRI, the Plan's sponsor, was notified of the Advances; and (f) the repayment of the Advances by the Plan was made at the direction of VRI and was restricted to amounts received from the proceeds of the installment payments made by Travelers under the GIC, and no other Plan assets were used for that purpose.

FOR FURTHER INFORMATION CONTACT: Gary H. Lefkowitz of the Department, telephone (202) 219–8881. (This is not a toll-free number.)

General Information

The attention of interested persons is directed to the following:

(1) The fact that a transaction is the subject of an exemption under section 408(a) of the Act and/or section 4975(c)(2) of the Code does not relieve a fiduciary or other party in interest of disqualified person from certain other provisions of the Act and/or the Code, including any prohibited transaction provisions to which the exemption does not apply and the general fiduciary responsibility provisions of section 404 of the Act, which among other things require a fiduciary to discharge his duties respecting the plan solely in the interest of the participants and beneficiaries of the plan and in a prudent fashion in accordance with section 404(a)(1)(b) of the act; nor does it affect the requirement of section 401(a) of the Code that the plan must operate for the exclusive benefit of the employees of the employer maintaining the plan and their beneficiaries;

(2) Before an exemption may be granted under section 408(a) of the Act and/or section 4975(c)(2) of the Code, the Department must find that the exemption is administratively feasible, in the interests of the plan and of its participants and beneficiaries and protective of the rights of participants and beneficiaries of the plan;

(3) The proposed exemptions, if granted, will be supplemental to, and not in derogation of, any other provisions of the Act and/or the Code, including statutory or administrative exemptions and transitional rules. Furthermore, the fact that a transaction is subject to an administrative or statutory exemption is not dispositive of whether the transaction is in fact a prohibited transaction; and

(4) The proposed exemptions, if granted, will be subject to the express condition that the material facts and representations contained in each application are true and complete and accurately describe all material terms of the transaction which is the subject of the exemption. In the case of continuing exemption transactions, if any of the material facts or representations described in the application change after the exemption is granted, the exemption will cease to apply as of the date of such change. In the event of any such change, application for a new exemption may be made to the Department.

Signed at Washington, DC, this 3rd day of March, 1999.

Ivan Strasfeld,

Director of Exemption Determinations, Pension and Welfare Benefits Administration, Department of Labor.

[FR Doc. 99–5570 Filed 3–5–99; 8:45 am]

BILLING CODE 4510–29–P

NATIONAL AERONAUTICS AND SPACE ADMINISTRATION

[Notice (99–041)]

NASA Advisory Council (NAC), Task Force on International Space Station Operational Readiness; Meeting

AGENCY: National Aeronautics and Space Administration.

ACTION: Notice of meeting.

SUMMARY: In accordance with the Federal Advisory Committee Act, Pub. L. 92–463, as amended, the National Aeronautics and Space Administration announces an open meeting of the NAC Task Force on International Space Station Operational Readiness (IOR).

DATES: Friday, March 12, 1999, 1:00 p.m.–2:00 p.m. Eastern Standard Time.

ADDRESSES: NASA Headquarters, 300 E Street, SW, Room Mic 7, Washington, DC 20546.

FOR FURTHER INFORMATION CONTACT: Mr. Philip Cleary, Code IH, National Aeronautics and Space Administration, Washington, DC 20546–0001, 202/358–4461.

SUPPLEMENTARY INFORMATION: This meeting will be open to the public up to the seating capacity of the room. The agenda for the meeting is as follows:

—Review the results NASA/Russian Space Agency (RSA) assessment of the feasibility of transferring equipment from the Mir to the ISS.

It is imperative that the meeting be held on these dates to accommodate the scheduling priorities of the key participants. Visitors will be requested to sign a visitors register.

Dated: March 2, 1999.

Mathew M. Crouch,

Advisory Committee Management Officer, National Aeronautics and Space Administration.

[FR Doc. 99–5669 Filed 3–5–99; 8:45 am]

BILLING CODE 7510–01–P

NATIONAL FOUNDATION ON THE ARTS AND THE HUMANITIES

National Council on the Humanities; Meeting

March 1, 1999.

Pursuant to the provisions of the Federal Advisory Committee Act (Public Law 92–463, as amended) notice is hereby given the National Council on the Humanities will meet in Washington, D.C. on March 22–23, 1999.

The purpose of the meeting is to advise the Chairman of the National Endowment for the Humanities with respect to policies, programs, and procedures for carrying out his functions, and to review applications for financial support and gifts offered to the Endowment and to make recommendations thereon to the Chairman.

The meeting will be held in the Old Post Office Building, 1100 Pennsylvania Avenue, N.W., Washington, D.C. A portion of the morning and afternoon sessions on March 22–23, 1999, will not be open to the public pursuant to subsections (c)(4), (6) and (9)(B) of section 552b of Title 5, United States Code because the Council will consider information that may disclose: trade secrets and commercial or financial information obtained from a person and privileged or confidential; information of a personal nature the disclosure of which will constitute a clearly unwarranted invasion of personal privacy; and information the disclosure of which would significantly frustrate implementation of proposed agency action. I have made this determination

under the authority granted me by the Chairman's Delegation of Authority dated July 19, 1993.

The agenda for the session on March 22, 1999 will be as follows:

Committee Meetings

(Open to the Public)

Policy Discussion

9:00–10:30 a.m. Preservation and Access/Challenge Grants—Room 415
Public Programs—Room 420
Federal/State Partnership—Room 507
11:30 a.m. until adjourned. Research/Education Programs—Room M07

(Closed to the Public)

Discussion of specific grant applications and programs before the Council

9:00–11:30 a.m. Research/Education Programs—Room M07
10:30 a.m. until adjourned. Preservation and Access/Challenge Grants—Room 415
Public Programs—Room 420
Federal/State Partnership—Room 507
12:30–2:00 p.m. Jefferson Lecture Committee Meeting—Room 430

The morning session on March 23, 1999 will convene at 9:00 a.m., in the 1st Floor Council Room, M–09, and will be open to the public, as set out below. The agenda for the morning session will be as follows:

Minutes of the Previous Meeting and Reports

A. Opening Remarks and Presentations
B. Staff Report
C. Reports on Policy & General Matters
1. Overview
2. Research and Education Programs
3. Preservation and Access and Challenge Grants
4. Public Programs
5. Federal/State Partnership
6. Jefferson Lecture

The remainder of the proposed meeting will be given to the consideration of specific applications and closed to the public for the reasons stated above.

Further information about this meeting can be obtained from Ms. Nancy E. Weiss, Advisory Committee Management Officer, Washington, D.C. 20506, or call area code (202) 606–8322, TDD (202) 606–8282. Advance notice of any special needs or accommodations is appreciated.

Nancy E. Weiss,

Advisory Committee, Management Officer.

[FR Doc. 99–5588 Filed 3–5–99; 8:45 am]

BILLING CODE 7536–01–M

NUCLEAR REGULATORY COMMISSION

Agency Information Collection Activities: Submission for OMB Review; Comment Request

AGENCY: U.S. Nuclear Regulatory Commission (NRC).

ACTION: Notice of the OMB review of information collection and solicitation of public comment.

SUMMARY: The NRC has recently submitted to OMB for review the following proposal for the collection of information under the provisions of the Paperwork Reduction Act of 1995 (44 U.S.C. Chapter 35). The NRC hereby informs potential respondents that an agency may not conduct or sponsor, and that a person is not required to respond to, a collection of information unless it displays a currently valid OMB control number.

1. *Type of submission, new, revision, or extension:* Revision.

2. *The title of the information collection:* 10 CFR Part 52, ''Early Site Permits; Standard Design Certifications; and Combined Licenses for Nuclear Power Plants''.

3. *The form number if applicable:* Not applicable.

4. *How often the collection is required:* On occasion and every 10 to 20 years for applications for renewal.

5. *Who will be required or asked to report:* Designers of commercial nuclear power plants, electric power utilities, and any person eligible under the Atomic Energy Act to apply for a construction permit for a nuclear power plant.

6. *An estimate of the number of responses:* No applications expected during the next three years.

7. *The estimated number of annual respondents:* No applications expected during the next three years.

8. *An estimate of the total number of hours needed annually to complete the requirement or request:* 0.

9. *An indication of whether Section 3507(d), Pub. L. 104–13 applies:* Not applicable.

10. *Abstract:* 10 CFR Part 52 establishes requirements for the granting of early site permits, certifications of standard nuclear power plant designs, and licenses which combine in a single license a construction permit and an operating license with conditions (combined licenses). Part 52 also establishes requirements for renewal of these permits, certifications, and licenses; amendments to them; exemptions from certifications; and variances from early site permits.

NRC uses the information collected to assess the adequacy and suitability of an applicant's site, plant design, construction, training and experience, and plans and procedures for the protection of public health and safety. The NRC review of such information and the findings derived from that information form the basis of NRC decisions and actions concerning the issuance, modification, or revocation of site permits, design certifications, and combined licenses for nuclear power plants.

A copy of the final supporting statement may be viewed free of charge at the NRC Public Document Room, 2120 L Street, NW (lower level), Washington, DC. OMB clearance requests are available at the NRC worldwide web site (http://www.nrc.gov/NRC/PUBLIC/OMB/index.html). The document will be available on the NRC home page site for 60 days after the signature date of this notice.

Comments and questions should be directed to the OMB reviewer listed below by April 7, 1999. Comments received after this date will be considered if it is practical to do so, but assurance of consideration cannot be given to comments received after this date. Erik Godwin, Office of Information and Regulatory Affairs (3150–0151), NEOB–10202, Office of Management and Budget, Washington, DC 20503.

Comments can also be submitted by telephone at (202) 395–3084.

The NRC Clearance Officer is Brenda Jo. Shelton, 301–415–7233.

Dated at Rockville, Maryland, this 25th day of February 1999.

For the Nuclear Regulatory Commission.

Brenda Jo. Shelton,

NRC Clearance Officer, Office of the Chief Information Officer.

[FR Doc. 99–5600 Filed 3–5–99; 8:45 am]

BILLING CODE 7590–01–P

NUCLEAR REGULATORY COMMISSION

Agency Information Collection Activities: Submission for OMB Review; Comment Request

AGENCY: U.S. Nuclear Regulatory Commission (NRC).

ACTION: Notice of the OMB review of information collection and solicitation of public comment.

SUMMARY: The NRC has recently submitted to OMB for review the following proposal for the collection of information under the provisions of the Paperwork Reduction Act of 1995 (44

U.S.C. Chapter 35). The NRC hereby informs potential respondents that an agency may not conduct or sponsor, and that a person is not required to respond to, a collection of information unless it displays a currently valid OMB control number.

1. Type of submission, new, revision, or extension: Extension.

2. The title of the information collection: 10 CFR Part 54, ''Requirements for Renewal of Operating Licenses for Nuclear Power Plants''.

3. The form number if applicable: Not applicable.

4. How often the collection is required: One-time submission with application for renewal of an operating license for a nuclear power plant and occasional collections for holders of renewed licenses.

5. Who will be required or asked to report: Commercial nuclear power plant licensees who wish to renew their operating licenses.

6. An estimate of the number of responses: 1–2 responses.

7. The estimated number of annual respondents: 1–2 respondents based on an estimate of 4 renewal applications during the requested 3-year clearance period.

8. An estimate of the total number of hours needed annually to complete the requirement or request: Approximately 89,333 hours (85,333 hours one-time reporting burden and 4,000 hours recordkeeping burden).

9. An indication of whether Section 3507(d), Pub. L. 104–13 applies: Not applicable.

10. Abstract: 10 CFR Part 54 of the NRC regulations, ''Requirements for Renewal of Operating Licenses for Nuclear Power Plants,'' specifies the procedures, criteria, and standards governing nuclear power plant license renewal, including information submittal and recordkeeping requirements, so that the NRC may make determinations necessary to promote the health and safety of the public.

A copy of the final supporting statement may be viewed free of charge at the NRC Public Document Room, 2120 L Street, NW (lower level), Washington, DC. OMB clearance requests are available at the NRC worldwide web site (http://www.nrc.gov/NRC/PUBLIC/OMB/index.html). The document will be available on the NRC home page site for 60 days after the signature date of this notice.

Comments and questions should be directed to the OMB reviewer listed below by April 7, 1999. Comments received after this date will be considered if it is practical to do so, but assurance of consideration cannot be given to comments received after this date.

Erik Godwin, Office of Information and Regulatory Affairs (3150–0155) NEOB–10202, Office of Management and Budget, Washington, DC 20503.

Comments can also be submitted by telephone at (202) 395–3084.

The NRC Clearance Officer is Brenda Jo. Shelton, 301–415–7233.

Dated at Rockville, Maryland, this 2nd day of March 1999.

For the Nuclear Regulatory Commission.

Brenda Jo. Shelton,

NRC Clearance Officer, Office of the Chief Information Officer.

[FR Doc. 99–5601 Filed 3–5–99; 8:45 am]

BILLING CODE 7590–01–P

NUCLEAR REGULATORY COMMISSION

[Docket No. 50–368]

Entergy Operations, Inc.; Notice of Consideration of Issuance of Amendment to Facility Operating License, Proposed No Significant Hazards Consideration Determination, and Opportunity for a Hearing

The U.S. Nuclear Regulatory Commission (the Commission) is considering issuance of an amendment to Facility Operating License No. NPF–6, issued to Entergy Operations, Inc., (the licensee), for operation of Arkansas Nuclear One, Unit-2 (ANO–2) located in Pope County, Arkansas.

The proposed amendment would revise Technical Specification (TS) Table 3.3–1, ''Reactor Protective Instrumentation,'' Action 2 through the addition of a footnote. The proposed footnote would allow startup and operation with the functional units associated with the Channel ''D'' ex-core nuclear instrumentation to be maintained in the bypassed or tripped condition following the restart from Refueling Outage 2R13. This footnote is intended to support normal plant operations until such time that the Channel ''D'' ex-core detector assembly can be restored to an operable condition. This footnote will be in effect for a time period not to extend beyond Mid-Cycle Outage 2P99 which is the next scheduled entry into cold shutdown for ANO–2.

The licensee requested that this proposed amendment be processed as an exigent request, pursuant to 10 CFR 50.91(a)(6). The exigency is created by the inability of ANO–2 to fully comply with TS Table 3.3–1, Action 2. TS Table 3.3–1 requires that three of four channels of linear power level-high, local power density-high, departure from nucleate boiling ratio-low and core protection calculators be operable in Modes 1 and 2. In addition, TS Table 3.3–1 requires three of four channels of the logarithmic power level-high function be operable in Mode 2, and in Modes 3, 4, and 5 when the system is capable of control element assembly (CEA) withdrawal. Action 2 states, ''With the number of channels Operable one less than the Total Number of Channels, operation in the applicable Modes may continue provided the inoperable channel is placed in the bypassed or tripped condition within 1 hour. If the inoperable channel is bypassed for greater than 48 hours, the desirability of maintaining this channel in the bypassed condition shall be reviewed at the next regularly scheduled PSC [Plant Safety Committee] meeting in accordance with the QA Manual Operations. The channel shall be returned to Operable status prior to startup following the next Cold Shutdown.'' During the previous operating cycle Channel ''D'' ex-core detector failed and was maintained in the bypassed or tripped condition until Refueling Outage 2R13 which began on January 9, 1999. During Refueling Outage 2R13, the Channel ''D'' detector assembly was replaced with a spare detector assembly. The detector assembly passed all pre- and post-installation electrical tests. However, with the unit in Mode 3, plant operators noticed that the instrument was not responding as anticipated. Subsequent troubleshooting determined that the detector or its associated cables were faulty and no spare assemblies were readily available on-site or from the vendor. Since Channel ''D'' was inoperable prior to the unit shutdown for 2R13, TS Table 3.3–1, Action 2, requires that it be returned to operable status prior to restart.

Based on the circumstances described above, the NRC verbally issued a Notice of Enforcement Discretion (NOED) on February 23, 1999. The NOED was documented by letter dated February 24, 1999. The NOED expressed the NRC's intention to exercise discretion not to enforce compliance with TS Limiting Condition for Operation 3.0.4 and TS Table 3.3–1, Action 2, until the NRC staff acts on the licensee's exigent TS amendment request to revise TS Table 3.3–1, Action 2, with a footnote to address this condition until such time that the Channel ''D'' ex-core detector assembly can be replaced. This footnote will be in effect for a time period not to

extend beyond Mid-Cycle Outage 2P99 which is the next scheduled entry into cold shutdown for ANO–2. The licensee submitted the exigent TS amendment request on February 25, 1999.

Before issuance of the proposed license amendment, the Commission will have made findings required by the Atomic Energy Act of 1954, as amended (the Act) and the Commission's regulations.

Pursuant to 10 CFR 50.91(a)(6) for amendments to be granted under exigent circumstances, the NRC staff must determine that the amendment request involves no significant hazards consideration. Under the Commission's regulations in 10 CFR 50.92, this means that operation of the facility in accordance with the proposed amendment would not (1) involve a significant increase in the probability or consequences of an accident previously evaluated; or (2) create the possibility of a new or different kind of accident from any accident previously evaluated; or (3) involve a significant reduction in a margin of safety. As required by 10 CFR 50.91(a), the licensee has provided its analysis of the issue of no significant hazards consideration, which is presented below:

An evaluation of the proposed change has been performed in accordance with 10 CFR 50.91(a)(1) regarding no significant hazards considerations using standards in 10 CFR 50.92(c). A discussion of these standards as they relate to this amendment request follows:

Criterion 1—Does not involve a significant increase in the probability or consequences of an accident previously evaluated.

Startup and operation with the ANO–2 Reactor Protective System (RPS) linear power level-high and logarithmic power level-high functional units, and the Core Protection Calculator (CPC) local power density-high (LPD-high), and departure from nucleate boiling ratio-low (DNBR-low) functional units in a 2-out-of-3 logic mode has no effect on the probability of any accidents previously evaluated as it has no impact on the causes of initiating events in the plant.

Startup and operation with these functional units in a 2-out-of-3 logic mode has no effect on the consequences of an event previously evaluated since, with one channel of each functional unit in bypass, the functional units maintain a functional redundancy of one. This ensures protective system actuation in accordance with the assumptions of the accident analysis. The accident analysis has accounted for those events that might have an effect on the functional units due to the geometry of the installed sensors, and demonstrated acceptable results in such a case, assuming a single failure and a channel in bypass.

Therefore, startup and operation with the ANO–2 RPS linear power level-high and logarithmic power level-high functional units, and the CPC LPD-high, and DNBR-low functional units in a 2-out-of-3 logic mode does not involve a significant increase in the probability or consequences of an accident previously evaluated.

Criterion 2—Does not create the possibility of a new or different kind of accident from any accident previously evaluated.

The only way the proposed change could alter the course of an event would be by the ANO–2 RPS linear power level-high and logarithmic power level-high functional units, and the CPC LPD-high, and DNBR-low functional units failing to actuate when required. These functional units maintain a functional redundancy of one when operating in a 2-out-of-3 logic mode, thus the functional units will not fail in this manner.

Therefore, startup and operation with the ANO–2 RPS linear power level-high and logarithmic power level-high functional units, and the CPC LPD-high, and DNBR-low functional units in a 2-out-of-3 logic mode does not create the possibility of a new or different kind of accident from any previously evaluated.

Criterion 3—Does not involve a significant reduction in the margin of safety.

The ANO–2 technical specification (TS) for RPS linear power level-high and logarithmic power level-high functional units, and the CPC LPD-high, and DNBR-low functional units allows operation through the remainder of the cycle with only three channels operable, providing that the desirability of maintaining this configuration is reviewed at the next regularly scheduled Plant Safety Committee (PSC) meeting. The TS requires that the inoperable functional unit be returned to operable status prior to startup following the next Cold Shutdown. Per the Safety Evaluation Report for TS Amendment 159, which added these provisions to the TS, the goal of the PSC review and the requirement to return the system to an operable status prior to startup was to repair the inoperable channel and return it to service as quickly as practical. Review of the design and installation of these functional units has demonstrated that, while starting up or operating in a 2-out-of-3 logic mode, their functional redundancy is one. For any design bases event, with the occurrence of any postulated single failure, the ANO–2 RPS linear power level-high and logarithmic power level-high functional units, and the CPC LPD-high, and DNBR-low functional units will provide the protection assumed in the accident analysis.

Therefore, startup and operation with the ANO–2 RPS linear power level-high and logarithmic power level-high functional units, and the CPC LPD-high, and DNBR-low functional units in a 2-out-of-3 logic mode does not involve a significant reduction in the margin of safety.

Based upon the reasoning presented above, Entergy Operations has determined that startup and operation with the ANO–2 RPS linear power level-high and logarithmic power level-high functional units, and the CPC LPD-high, and DNBR-low functional units in a 2-out-of-3 logic mode does not involve a significant hazards consideration.

The NRC staff has reviewed the licensee's analysis and, based on this review, it appears that the three standards of 10 CFR 50.92(c) are satisfied. Therefore, the NRC staff proposes to determine that the amendment request involves no significant hazards consideration.

The Commission is seeking public comments on this proposed determination. Any comments received within 14 days after the date of publication of this notice will be considered in making any final determination.

Normally, the Commission will not issue the amendment until the expiration of the 14-day notice period. However, should circumstances change during the notice period, such that failure to act in a timely way would result, for example, in derating or shutdown of the facility, the Commission may issue the license amendment before the expiration of the 14-day notice period, provided that its final determination is that the amendment involves no significant hazards consideration. The final determination will consider all public and State comments received. Should the Commission take this action, it will publish in the **Federal Register** a notice of issuance. The Commission expects that the need to take this action will occur very infrequently.

Written comments may be submitted by mail to the Chief, Rules and Directives Branch, Division of Administrative Services, Office of Administration, U.S. Nuclear Regulatory Commission, Washington, DC 20555–0001, and should cite the publication date and page number of this **Federal Register** notice. Written comments may also be delivered to Room 6D59, Two White Flint North, 11545 Rockville Pike, Rockville, Maryland, from 7:30 a.m. to 4:15 p.m. Federal workdays. Copies of written comments received may be examined at the NRC Public Document Room, the Gelman Building, 2120 L Street, NW., Washington, DC.

The filing of requests for hearing and petitions for leave to intervene is discussed below.

By April 7, 1999, the licensee may file a request for a hearing with respect to issuance of the amendment to the subject facility operating license and any person whose interest may be affected by this proceeding and who wishes to participate as a party in the proceeding must file a written request for a hearing and a petition for leave to intervene. Requests for a hearing and a petition for leave to intervene shall be filed in accordance with the Commission's ''Rules of Practice for Domestic Licensing Proceedings'' in 10 CFR Part 2. Interested persons should consult a current copy of 10 CFR 2.714

which is available at the Commission's Public Document Room, the Gelman Building, 2120 L Street, NW., Washington, DC, and at the local public document room located at the Tomlinson Library, Arkansas Tech University, Russellville, Arkansas 72801. If a request for a hearing or petition for leave to intervene is filed by the above date, the Commission or an Atomic Safety and Licensing Board, designated by the Commission or by the Chairman of the Atomic Safety and Licensing Board Panel, will rule on the request and/or petition; and the Secretary or the designated Atomic Safety and Licensing Board will issue a notice of hearing or an appropriate order.

As required by 10 CFR 2.714, a petition for leave to intervene shall set forth with particularity the interest of the petitioner in the proceeding, and how that interest may be affected by the results of the proceeding. The petition should specifically explain the reasons why intervention should be permitted with particular reference to the following factors: (1) The nature of the petitioner's right under the Act to be made a party to the proceeding; (2) the nature and extent of the petitioner's property, financial, or other interest in the proceeding; and (3) the possible effect of any order which may be entered in the proceeding on the petitioner's interest. The petition should also identify the specific aspect(s) of the subject matter of the proceeding as to which petitioner wishes to intervene. Any person who has filed a petition for leave to intervene or who has been admitted as a party may amend the petition without requesting leave of the Board up to 15 days prior to the first prehearing conference scheduled in the proceeding, but such an amended petition must satisfy the specificity requirements described above.

Not later than 15 days prior to the first prehearing conference scheduled in the proceeding, a petitioner shall file a supplement to the petition to intervene which must include a list of the contentions which are sought to be litigated in the matter. Each contention must consist of a specific statement of the issue of law or fact to be raised or controverted. In addition, the petitioner shall provide a brief explanation of the bases of the contention and a concise statement of the alleged facts or expert opinion which support the contention and on which the petitioner intends to rely in proving the contention at the hearing. The petitioner must also provide references to those specific sources and documents of which the petitioner is aware and on which the petitioner intends to rely to establish those facts or expert opinion. Petitioner must provide sufficient information to show that a genuine dispute exists with the applicant on a material issue of law or fact. Contentions shall be limited to matters within the scope of the amendment under consideration. The contention must be one which, if proven, would entitle the petitioner to relief. A petitioner who fails to file such a supplement which satisfies these requirements with respect to at least one contention will not be permitted to participate as a party.

Those permitted to intervene become parties to the proceeding, subject to any limitations in the order granting leave to intervene, and have the opportunity to participate fully in the conduct of the hearing, including the opportunity to present evidence and cross-examine witnesses.

If the amendment is issued before the expiration of the 30-day hearing period, the Commission will make a final determination on the issue of no significant hazards consideration. If a hearing is requested, the final determination will serve to decide when the hearing is held.

If the final determination is that the amendment request involves no significant hazards consideration, the Commission may issue the amendment and make it immediately effective, notwithstanding the request for a hearing. Any hearing held would take place after issuance of the amendment.

If the final determination is that the amendment request involves a significant hazards consideration, any hearing held would take place before the issuance of any amendment.

A request for a hearing or a petition for leave to intervene must be filed with the Secretary of the Commission, U.S. Nuclear Regulatory Commission, Washington, DC 20555–0001, Attention: Rulemakings and Adjudications Staff, or may be delivered to the Commission's Public Document Room, the Gelman Building, 2120 L Street, NW., Washington, DC, by the above date. A copy of the petition should also be sent to the Office of the General Counsel, U.S. Nuclear Regulatory Commission, Washington, DC 20555–0001, and to Nicholas S. Reynolds, Esquire, Winston and Strawn, 1400 L Street, NW., Washington, D.C. 20005–3502, attorney for the licensee.

Nontimely filings of petitions for leave to intervene, amended petitions, supplemental petitions and/or requests for hearing will not be entertained absent a determination by the Commission, the presiding officer or the presiding Atomic Safety and Licensing Board that the petition and/or request should be granted based upon a balancing of the factors specified in 10 CFR 2.714(a)(1)(i)–(v) and 2.714(d).

For further details with respect to this action, see the application for amendment dated February 25, 1999, which is available for public inspection at the Commission's Public Document Room, the Gelman Building, 2120 L Street, NW., Washington, DC, and at the local public document room, located at the Tomlinson Library, Arkansas Tech University, Russellville, Arkansas 72801.

Dated at Rockville, Maryland, this 2nd day of March 1999.

For the Nuclear Regulatory Commission.

M. Christopher Nolan,

Project Manager, Project Directorate IV–1, Division of Licensing Project Management, Office of Nuclear Reactor Regulation.

[FR Doc. 99–5599 Filed 3–5–99; 8:45 am]

BILLING CODE 7590–01–P

NUCLEAR REGULATORY COMMISSION

[Docket No. 50–482–LT]

Memorandum and Order

Commissioners

Shirley Ann Jackson, Chairman
Greta J. Dicus
Nils J. Diaz
Edward McGaffigan, Jr.
Jeffrey S. Merrifield

In the Matter of: Kansas Gas and Electric Co. Corp. *et al.*; (Wolf Creek Generating Station, Unit 1); CLI–99–05.

Before the Commission is a petition to intervene and request for hearing filed by the Kansas Electric Power Cooperative (KEPCo). Pursuant to our recently-promulgated Subpart M, 10 CFR 2.1300 *et seq.*, KEPCo challenges a proposed license transfer affecting the Wolf Creek Generating Station, a nuclear power reactor in which KEPCo owns a 6% interest. The license transfer would transfer the 47% ownership interests of the Kansas Gas and Electric Company (KGE) and the Kansas City Power and Light Company (KCPL) to a new company, Westar Energy. KEPCo's petition claims that the license transfer would have ''serious adverse and anticompetitive effects'' (p. 5), would result in ''significant changes'' in the competitive market (pp. 15–17), and therefore warrants an antitrust review under section 105c of the Atomic Energy Act, 42 U.S.C. 2135(c).

The NRC staff historically has performed a ''significant changes'' review in considering the antitrust aspects of certain kinds of license

transfers. However, the Commission intends to consider in this case whether to move away from the prior practice and to direct the NRC staff no longer to conduct significant changes reviews in license transfer cases, including the current case. The Commission expects to consider a number of factors, including its own resources and expertise, and its statutory mandate. The governing legislation, section 105c of the AEA, and its legislative history, do not appear to call for fresh Commission antitrust reviews after the initial construction permit and operating license stage. *See American Public Power Ass'n* v. *NRC*, 990 F.2d 1309, 1311–13 (D.C. Cir. 1993). *See also* 56 FR 64943, 64969–71 (Dec. 13, 1991). Moreover, with the passage of the Energy Policy Act of 1992, a sister federal agency, the Federal Energy Regulatory Commission (FERC), now has broad powers to order relief remedying anti-competitive situations. *See* 16 U.S.C. 824j–k.

Accordingly, prior to further considering KEPCo's request for a hearing on antitrust issues, we direct KEPCo, and the license transfer applicants (KGE and KCPL), to file briefs within fourteen days of this order. The briefs shall address one question only: whether as a matter of law or policy the Commission may and should eliminate all antitrust reviews in connection with license transfers and therefore terminate this adjudicatory proceeding forthwith. The briefs shall be provided to all other parties (by facsimile, e-mail or hand-delivery) on the filing date, and shall not exceed thirty pages per side (i.e., a total of thirty pages for KEPCo and a total of thirty pages for KGE and KCPL, combined). Each party may file reply briefs, not to exceed ten pages per side, within twenty-one days of the date of this order. No other pleadings in response to this order, or as authorized by Subpart M, shall be filed pending further order of the Commission.[1] The NRC staff shall not be a party to this proceeding.

It is so ordered.

Dated at Rockville, Maryland, this 2nd day of March, 1999.

For the Commission.

Annette L. Vietti-Cook,

Secretary of the Commission.

[FR Doc. 99–5593 Filed 3–5–99; 8:45 am]

BILLING CODE 7590–01–P

[1] The Commission will accept *amicus curiae* briefs by any interested person or entity, so long as the brief is filed by March 31, 1999. No *amicus* brief shall exceed twenty pages. We are posting this order on the NRC's web site, publishing it in the **Federal Register**, and also sending copies to the United States Department of Justice, the Federal Energy Regulatory Commission, the Nuclear Energy Institute, the American Public Power Association, and the National Rural Electric Cooperative Association.

NUCLEAR REGULATORY COMMISSION

[Docket Nos. 50–445 and 50–446]

Texas Utilities Electric Co.; Comanche Peak Steam Electric Station, Units 1 and 2; Notice of Issuance of Amendment to Facility Operating Licenses

The United States Nuclear Regulatory Commission (Commission) has issued Amendment No. 64 to Facility Operating Licenses Nos. NPF–87 and NPF–89, issued to TU Electric (the licensee) for operation of the Comanche Peak Steam Electric Station, Units 1 and 2, (CPSES) located in Somervell County, Texas.

The amendment is effective as of the date of issuance and shall be implemented within 180 days of the issuance of the amendment. The implementation of the amendment includes the two license conditions which are being added to Appendix D of the licenses as part of the amendment.

The amendment replaces, in its entirety, the current Technical Specifications (TS) with a set of improved TS based on NUREG–1431, ''Standard Technical Specifications, Westinghouse Plants,'' Revision 1, dated April 1995, including all approved changes to the standard TS; the Commission's Final Policy Statement, ''NRC Final Policy Statement on Technical Specifications Improvements for Nuclear Power Reactors,'' published on July 22, 1993 (58 FR 39132); and 10 CFR 50.36, ''Technical Specifications,'' as amended July 19, 1995 (60 FR 36953). In addition, the amendment adds two license conditions to the newly-created Appendix D of the operating licenses that require (1) the relocation of previous TS requirements into license-controlled documents and (2) the first performance of new and revised surveillance requirements for the improved TS to be related to the implementation date for the improved TS. The implementation of the amendment and the license conditions will be completed no later than 180 days after the date of the amendment, as stated in the amendment.

The application for the amendment, as supplemented, complies with the standards and requirements of the Atomic Energy Act of 1954, as amended (the Act), and the Commission's rules and regulations. The Commission has made appropriate findings as required by the Act and the Commission's rules and regulations in 10 CFR Chapter I.

Notice of Consideration of Issuance of Amendment and Opportunity for Hearing in connection with this action was published in the **Federal Register** on January 27, 1999, (64 FR 4148). No request for a hearing or petition for leave to intervene was filed following this notice.

The Commission has prepared an Environmental Assessment and has determined not to prepare an environmental impact statement related to the action to convert the current TS to the improved TS. Based on the Environmental Assessment, the Commission has concluded that the issuance of the amendment will not have a significant effect on the quality of the human environment beyond that described in the Final Environmental Statement (FES) related to the operation of CPSES (NUREG–0775) dated September 1981. The Environmental Assessment was published in the **Federal Register** on February 12, 1999 (64 FR 7214).

For further details with respect to the amendment see (1) the application for amendment dated May 15, 1997, as supplemented by letters in 1998 dated June 26, August 5, August 28, September 24, October 21, October 23, November 24 (2 letters), December 11, December 17, and December 18, and 7 letters in 1999 dated January 5, February 3 (3 letters), February 16, and February 23 (2 letters), and (2) the Commission's related Safety Evaluation and Environmental Assessment. All of these items are available for public inspection at the Commission's Public Document Room, the Gelman Building, 2120 L Street, N.W., Washington, D.C., and at the local public document room located at the University of Texas at Arlington Library, Government Publications/Maps, 702 College, P.O. Box 19497, Arlington, TX 76019.

Dated at Rockville, Maryland, this 26th day of February, 1999.

For the Nuclear Regulatory Commission.

Jack N. Donohew,

Senior Project Manager, Project Directorate IV–1, Division of Licensing Project Management, Office of Nuclear Reactor Regulation.

[FR Doc. 99–5596 Filed 3–5–99; 8:45 am]

BILLING CODE 7590–01–P

NUCLEAR REGULATORY COMMISSION

[Docket Nos. 50–317 and 50–318]

Baltimore Gas & Electric Company. Calvert Cliffs Nuclear Power Plant, Units 1 and 2; Notice of Availability of the Draft Supplement to the Generic Environmental Impact Statement and Public Meeting for the License Renewal of Calvert Cliffs Nuclear Power Plant, Units 1 and 2

Notice is hereby given that the U.S. Nuclear Regulatory Commission (the Commission) has published a draft plant-specific supplement to the Generic Environmental Impact Statement (GEIS) (NUREG–1437) regarding the renewal of operating licenses DPR–53 and DPR–69 for an additional 20 years of operation at the Calvert Cliffs Nuclear Power Plant (CCNPP), Units 1 and 2, respectively. CCNPP is located in Calvert County, Maryland.

The draft supplement to the GEIS is available for public inspection and copying at the Commission's Public Document Room at the Gelman Building, 2120 L Street NW., Washington, D.C., and the Local Public Document Room located in the Calvert County Public Library, 30 Duke Street, Prince Frederick, MD 20678.

Any interested party may submit written comments on the proposed action and on the draft supplement to the GEIS for consideration by the NRC staff. To be certain of consideration, comments must be received by May 20, 1999. Comments received after the due date will be considered if it is practical to do so, but the NRC staff is able to assure consideration only for comments received on or before this date. Written comments on the draft supplement to the GEIS should be sent to—Chief, Rules and Directives Branch, Division of Administrative Services, Mailstop T–6D 59, U.S. Nuclear Regulatory Commission, Washington, D.C. 20555–0001. Comments may be hand-delivered to the NRC at 11545 Rockville Pike, Rockville, Maryland, between 7:45 a.m. and 4:15 p.m. on Federal workdays. Submittal of electronic comments may be sent by the Internet to the NRC at cceis@nrc.gov. All comments received by the Commission, including those made by Federal, State, and local agencies, Indian tribes or other interested persons, will be made available for public inspection at the Commission's Public Document Room in Washington, D.C. and the Local Public Document Room located in the Calvert County Public Library, 30 Duke Street, Prince Frederick, MD 20678.

Upon consideration of the comments submitted, the NRC staff will prepare a final supplement to the to the GEIS. Notice of the availability of the final supplement to the GEIS will be published in the **Federal Register**.

The NRC staff will hold a public meeting to present an overview of the draft supplement to the GEIS and to accept oral and written public comment on it. The public meeting will be held at the Holiday Inn Select, Solomons, Maryland, on April 6, 1999. There will be two sessions to accommodate interested parties. The first session will convene at 1:30 p.m. and will continue until 4:30 p.m. The second session will convene at 7:00 p.m. and will continue until 10:00 p.m. Both meetings will be transcribed and will include (1) a presentation of the contents of the draft supplement to the GEIS, and (2) the opportunity for interested Government agencies, organizations, and individuals to provide comments on the draft supplement to the GEIS. Persons may pre-register to attend or present oral comments at the meeting by contacting Mr. Thomas J. Kenyon by telephone at 1–800–368–5642, extension 1120, or by Internet to the NRC at cceis@nrc.gov no later than April 2, 1999. Members of the public may also register to provide oral comments within 15 minutes of the start of each session. Individual oral comments may be limited by the time available, depending on the number of persons who register. If special equipment or accommodations are needed to attend or present information at the public meeting, the need should be brought to Mr. Kenyon's attention no later than April 2, 1999, so that the NRC staff can determine whether the request can be accommodated.

For Further Information Contact: Mr. Thomas J. Kenyon, Generic Issues and Environmental Projects Branch, Division of Regulatory Improvement Programs, U.S. Nuclear Regulatory Commission, Washington, D.C. 20555. Mr. Kenyon can be contacted at the aforementioned telephone number or e-mail address.

Dated at Rockville, Maryland, this 2nd day of March, 1999.

For the Nuclear Regulatory Commission.

David B. Matthews,

Director, Division of Regulatory Improvement Programs, Office of Nuclear Reactor Regulation.

[FR Doc. 99–5597 Filed 3–5–99; 8:45 am]

BILLING CODE 7590–01–P

NUCLEAR REGULATORY COMMISSION

Advisory Committee on Nuclear Waste; Notice of Meeting

The Advisory Committee on Nuclear Waste (ACNW) will hold its 108th meeting on March 23–25, 1999, Room T–2B3, 11545 Rockville Pike, Rockville, Maryland.

The entire meeting will be open to public attendance.

The schedule for this meeting is as follows:

Tuesday, March 23, 1999—8:30 A.M. until 6:00 P.M.

Wednesday, March 24, 1999—8:30 A.M. until 6:00 P.M.

Thursday, March 25, 1999—8:30 A.M. until 4:00 P.M.

The following topics will be discussed:

A. Preparation of ACNW Reports

The Committee will discuss planned reports on the following topics: an ACNW self-assessment, DOE's Viability Assessment, NRC supported Waste Related Research, a White Paper on Repository Design Issues at Yucca Mountain, low levels of ionizing radiation and other topics discussed during this and previous meetings as the need arises.

B. Low Levels of Ionizing Radiation

The Committee will conduct a day and a half Working Group Meeting on the radiation effects from low-level ionizing radiation, specifically as related to the Linear Non-Threshold Dose Response Theory (LNT). This is a follow-on to several Committee meetings held over the past three years on this particular subject. Speakers will discuss various studies underway (or completed) as well as past advice related to this topic. Each speaker has been requested to identify suggestions for research, from their perspective, which would fill gaps in the current regulatory base. These periodic updates and overviews of research permit the Committee to continue to provide relevant advice to the Commission on this important topic. Among those invited to present related national and international perspectives are: representatives of the National Council on Radiation Protection and Measurements (NCRP), the Department of Energy (DOE), the National Academy of Sciences Board of Radiation Effects Research, the National Cancer Institute (NCI), the International Committee on Radiation Protection (ICRP), the University of Massachusetts, and the Nuclear Energy Institute (NEI).

Following the presentations, a panel discussion will be held which will involve the participation of many of the presenters, plus invitees from the Environmental Protection Agency and interested Congressional staff.

C. Meeting With NRC's Director, Division of Waste Management, Office of Nuclear Material Safety and Safeguards

The Committee will meet with the Director to discuss recent developments within the division, such as developments at the Yucca Mountain project, rules and guidance under development, available resources, and other items of mutual interest.

D. Clearance Rule

The Committee will review progress on the development of a Clearance Rule for materials and equipment having residual radioactivity. The potential rulemaking is intended to focus on levels above background for unrestricted use that are adequately protective of public health and safety.

E. Decommissioning Standard Review Plan (SRP)

The Committee will be briefed on the Decommissioning SRP by the NRC staff. The SRP is being developed to enable the NRC staff to evaluate information, submitted by licensees, in a timely, efficient and consistent manner to determine if the decommissioning can be conducted such that public health and safety are protected and the facility can be released in accordance with the NRC's requirements.

F. Committee Activities/Future Agenda

The Committee will consider topics proposed for future consideration by the full Committee and Working Groups. The Committee will discuss ACNW-related activities of individual members.

G. Miscellaneous

The Committee will discuss miscellaneous matters related to the conduct of Committee activities and organizational activities and complete discussion of matters and specific issues that were not completed during previous meetings, as time and availability of information permit.

Procedures for the conduct of and participation in ACNW meetings were published in the **Federal Register** on September 29, 1998 (63 FR 51967). In accordance with these procedures, oral or written statements may be presented by members of the public, electronic recordings will be permitted only during those portions of the meeting that are open to the public, and questions may be asked only by members of the Committee, its consultants, and staff. Persons desiring to make oral statements should notify the Chief, Nuclear Waste Branch, Mr. Richard K. Major, as far in advance as practicable so that appropriate arrangements can be made to schedule the necessary time during the meeting for such statements. Use of still, motion picture, and television cameras during this meeting will be limited to selected portions of the meeting as determined by the ACNW Chairman. Information regarding the time to be set aside for taking pictures may be obtained by contacting the Chief, Nuclear Waste Branch, prior to the meeting. In view of the possibility that the schedule for ACNW meetings may be adjusted by the Chairman as necessary to facilitate the conduct of the meeting, persons planning to attend should notify Mr. Major as to their particular needs.

Further information regarding topics to be discussed, whether the meeting has been canceled or rescheduled, the Chairman's ruling on requests for the opportunity to present oral statements and the time allotted therefor can be obtained by contacting Mr. Richard K. Major, Chief, Nuclear Waste Branch (telephone 301/415–7366), between 8:00 A.M. and 5:00 P.M. EST.

ACNW meeting notices, meeting transcripts, and letter reports are now available for downloading or reviewing on the internet at http://www.nrc.gov/ACRSACNW.

Video teleconferencing service is available for observing open sessions of ACNW meetings. Those wishing to use this service for observing ACNW meetings should contact Mr. Theron Brown, ACNW Audio Visual Technician (301–415–8066), between 7:30 a.m. and 3:45 p.m. EST at least 10 days before the meeting to ensure the availability of this service. Individuals or organizations requesting this service will be responsible for telephone line charges and for providing the equipment facilities that they use to establish the video teleconferencing link. The availability of video teleconferencing services is not guaranteed.

Dated: March 2, 1999.

Andrew L. Bates,

Advisory Committee Management Officer.

[FR Doc. 99–5592 Filed 3–5–99; 8:45 am]

BILLING CODE 7590–01–P

NUCLEAR REGULATORY COMMISSION

Advisory Committee on Reactor Safeguards; Subcommittee Meeting on Materials and Metallurgy; Notice of Meeting

The ACRS Subcommittee on Materials and Metallurgy will hold a meeting on March 24 and 25, 1999, Room T–2B1, 11545 Rockville Pike, Rockville, Maryland.

The entire meeting will be open to public attendance.

The agenda for the subject meeting shall be as follows:

Wednesday, March 24, 1999—8:30 a.m. until the conclusion of business

Thursday, March 25, 1999—8:30 a.m. until 12:00 Noon

The Subcommittee will meet with representatives of the NRC staff, the Nuclear Energy Institute (NEI), and the Boiling Water Reactor Vessel Internals Project (BWRVIP) to discuss industry and NRC activities related to: steam generator tube integrity; BWRVIP; Pressurized Water Reactor Materials Reliability Project; reactor pressure vessel integrity; status of resolution of the differences between the staff and ASME regarding the use of 1994 Addenda to the ASME Section III Code for Class 1, 2, and 3 piping systems; and the proposed revision to 10 CFR 50.55a., ''Codes and standards.'' The purpose of this meeting is to gather information, analyze relevant issues and facts, and to formulate proposed positions and actions, as appropriate, for deliberation by the full Committee.

Oral statements may be presented by members of the public with the concurrence of the Subcommittee Chairman. Written statements will be accepted and made available to the Committee. Electronic recordings will be permitted only during those portions of the meeting that are open to the public, and questions may be asked only by members of the Subcommittee, its consultants, and staff. Persons desiring to make oral statements should notify the cognizant ACRS staff engineer named below five days prior to the meeting, if possible, so that appropriate arrangements can be made.

During the initial portion of the meeting, the Subcommittee, along with any of its consultants who may be present, may exchange preliminary views regarding matters to be considered during the balance of the meeting.

The Subcommittee will then hear presentations by and hold discussions with representatives of the NRC staff, NEI, BWRVIP, and other interested

persons regarding this review. Further information regarding topics to be discussed, whether the meeting has been canceled or rescheduled, and the Chairman's ruling on requests for the opportunity to present oral statements and the time allotted therefor, can be obtained by contacting the cognizant ACRS staff engineer, Mr. Noel F. Dudley (telephone 301/415–6888) between 7:30 a.m. and 4:15 p.m. (EST). Persons planning to attend this meeting are urged to contact the above named individual one or two working days prior to the meeting to be advised of any potential changes to the agenda, etc., that may have occurred.

Dated: March 1, 1999.

Sam Duraiswamy,

Chief, Nuclear Reactors Branch.

[FR Doc. 99–5594 Filed 3–5–99; 8:45 am]

BILLING CODE 7590–01–P

NUCLEAR REGULATORY COMMISSION

Advisory Committee on Reactor Safeguards Subcommittee Meeting on Thermal-Hydraulic Phenomena

The ACRS Subcommittee on Thermal-Hydraulic Phenomena will hold a meeting on March 23, 1999, Room T–2B1, 11545 Rockville Pike, Rockville, Maryland.

Portions of this meeting may be closed to public attendance to discuss Electric Power Research Institute (EPRI) proprietary information pursuant to 5 U.S.C. 552b(c)(4).

The agenda for the subject meeting shall be as follows:

Tuesday, March 23, 1999—8:30 a.m. until the conclusion of business

The Subcommittee will continue its review of the Electric Power Research Institute (EPRI) RETRAN–3D thermal-hydraulic transient code. The purpose of this meeting is to gather information, analyze relevant issues and facts, and to formulate proposed positions and actions, as appropriate, for deliberation by the full Committee.

Oral statements may be presented by members of the public with the concurrence of the Subcommittee Chairman. Written statements will be accepted and made available to the Committee. Electronic recordings will be permitted only during those portions of the meeting that are open to the public, and questions may be asked only by members of the Subcommittee, its consultants, and staff. Persons desiring to make oral statements should notify the cognizant ACRS staff engineer named below five days prior to the meeting, if possible, so that appropriate arrangements can be made.

During the initial portion of the meeting, the Subcommittee, along with any of its consultants who may be present, may exchange preliminary views regarding matters to be considered during the balance of the meeting.

The Subcommittee will then hear presentations by and hold discussions with representatives of EPRI, NRC staff, and other interested persons regarding this review.

Further information regarding topics to be discussed, whether the meeting has been canceled or rescheduled, the scheduling of sessions which are open to the public, and the Chairman's ruling on requests for the opportunity to present oral statements and the time allotted therefor, can be obtained by contacting the cognizant ACRS staff engineer, Mr. Paul A. Boehnert (telephone 301/415–8065) between 7:30 a.m. and 4:15 p.m. (EST). Persons planning to attend this meeting are urged to contact the above named individual one or two working days prior to the meeting to be advised of any potential changes to the agenda, etc., that may have occurred.

Dated: March 2, 1999.

Sam Duraiswamy,

Chief, Nuclear Reactors Branch.

[FR Doc. 99–5595 Filed 3–5–99; 8:45 am]

BILLING CODE 7590–01–P

NUCLEAR REGULATORY COMMISSION

Consolidated Guidance About Materials Licenses: Program-Specific Guidance About Self-Shielded Irradiator Licenses, Dated October 1998

AGENCY: U.S. Nuclear Regulatory Commission.

ACTION: Notice of Availability.

SUMMARY: The U.S. Nuclear Regulatory Commission (NRC) is announcing the availability of NUREG–1556, Volume 5, ''Consolidated Guidance about Materials Licenses: Program-Specific Guidance about Self-Shielded Irradiator Licenses,'' dated October 1998.

ADDRESSES: Copies of NUREG–1556, Vol. 5, may be obtained by writing to the Superintendent of Documents, U.S. Government Printing Office, P.O. Box 37082, Washington, DC 20402–9328. Copies are also available from the National Technical Information Service, 5285 Port Royal Road, Springfield, Virginia 22161. Additionally, a copy of the document is also available for inspection and/or copying for a fee in the NRC Public Document Room, 2120 L Street, N.W. (Lower Level), Washington, DC 20555–0001.

FOR FURTHER INFORMATION CONTACT: Ms. Sally L. Merchant, Mail Stop TWFN 9–F–31, Division of Industrial and Medical Nuclear Safety, Office of Nuclear Material Safety and Safeguards, U.S. Nuclear Regulatory Commission, Washington, DC 20555, telephone: (301) 415–7874; electronic mail address: slm2@nrc.gov.

SUPPLEMENTARY INFORMATION: On December 23, 1997 (62 FR 67100), NRC announced the availability of draft NUREG–1556, Volume 5, ''Consolidated Guidance about Materials Licenses: Program-Specific Guidance about Self-Shielded Irradiator Licenses,'' dated October 1997, and requested comments on it. This draft NUREG report was the fifth program-specific guidance developed to support an improved materials licensing process. The staff considered all the comments, including constructive suggestions to improve the document, in the preparation of the final NUREG report.

The final version of NUREG–1556, Volume 5, is now available for use by applicants, licensees, NRC license reviewers, and other NRC staff. It supersedes the guidance for applicants and licensees previously found in Regulatory Guide 10.9, ''Guide for the Preparation of Applications for Licenses for the Use of Self-Contained Dry Source-Storage Gamma Irradiators,'' dated December 1988, and the guidance for licensing staff previously found in Policy and Guidance Directive, FC 84–16, Revision 1, ''Standard Review Plan for Applications for Use of Self-Contained Dry Source-Storage Gamma Irradiators,'' dated January 26, 1989. In addition, this report also contains information found in pertinent Technical Assistance Requests and Information Notices. NRC staff will use this final report in reviewing these applications.

Electronic Access

NUREG–1556, Volume 5, is available electronically by visiting NRC's Home Page (http://www.nrc.gov) and choosing ''Nuclear Materials,'' and then ''NUREG–1556, Volume 5.''

Small Business Regulatory Enforcement Fairness Act

In accordance with the Small Business Regulatory Enforcement Act of 1996, NRC has determined that this action is not a major rule and has verified this determination with the Office of Information and Regulatory

Affairs of the Office of Management and Budget.

Dated at Rockville, Maryland, this 25th day of February, 1999.

For the Nuclear Regulatory Commission.

Patricia K. Holahan,

Acting Chief, Rulemaking and Guidance Branch, Division of Industrial and Medical, Nuclear Safety, Office of Nuclear Material Safety and Safeguards.

[FR Doc. 99–5598 Filed 3–5–99; 8:45 am]

BILLING CODE 7590–01–P

OFFICE OF PERSONNEL MANAGEMENT

Science and Technology Laboratory Personnel Management Demonstration Project, Department of the Army: the Aviation Research, Development, and Engineering Center (AVRDEC).

AGENCY: Office of Personnel Management.

ACTION: Notice to make a technical correction to the AVRDEC **Federal Register** notice, Part V, Volume 62, Number 124, published on June 27, 1997, specifically, the definition of competitive area.

SUMMARY: 5 U.S.C. 4703 authorizes the Office of Personnel Management (OPM) to conduct demonstration projects that experiment with new and different personnel management concepts to determine whether such changes in personnel policy or procedures would result in improved Federal personnel management.

Public Law 103–337, October 5, 1994, permits the Department of Defense (DoD), with the approval of OPM, to carry out personnel demonstration projects at DoD Science and Technology (S&T) Reinvention Laboratories. This notice makes a technical correction to the AVRDEC Personnel Management Demonstration Project.

DATES: This demonstration project may be implemented at the U.S. Army Aviation Research Development, and Engineering Center beginning on March 8, 1999.

FOR FURTHER INFORMATION CONTACT: AVRDEC: Mr. David E. Knepper, U.S. Army Aviation and Missile Command, Attn: AMSAM–AR–ZS, Building 5681, Redstone Arsenal, AL 35898–5000, phone 256–313–4895. OPM: Ms. Joan Jorgenson, U.S. Office of Personnel Management, 1900 E Street N.W., Room 7460, Washington, DC 20415, phone 202–606–1315.

SUPPLEMENTARY INFORMATION:

1. Background

OPM has approved Science and Technology Laboratory Personnel Management Demonstration Projects and published the AVRDEC final plan in the **Federal Register** on Friday, June 27, 1997, Volume 62, Number 124, Part V. The AVRDEC demonstration project involved simplified job classification, paybanding, performance-based compensation systems, employee development provisions, and modified reduction-in-force procedures.

2. Overview

The Aviation Research, Development, and Engineering Center published its final project plan on June 27, 1997. The final plan incorporated changes made as a result of specific comments received from individuals during the public comment period. The comments were addressed in the final publication of the **Federal Register**. Any resulting changes to the plan were incorporated into that same document.

One commentor stated that the initial plan appeared to limit competitive areas to occupational families in all geographic areas. The commentor was concerned that the reduced number of employees in a particular occupational family would result in smaller competitive levels and lead to more separations from that occupational family if reduction-in-force (RIF) occurred in AVRDEC. Project managers agreed with the commentor and replied that a change would be made to Section III, Paragraph F: Revised Reduction-in-Force (RIF) Procedures, introductory paragraph, to clarify the meaning of the subsequent paragraph, Competitive Areas. This paragraph stated that positions included in the demonstration project at a specific geographic location will be considered a separate competitive area. Because of an oversight, however, the plan was published without making the correction.

Dated: March 2, 1999.

Office of Personnel Management.

Janice R. Lachance,

Director.

I. Executive Summary

The Department of the Army established the AVRDEC Personnel Management Demonstration Project to be generally similar to the system in use at the Navy Personnel Demonstration Project known as China Lake. The project was built upon the concepts of linking performance to pay for all covered positions, simplified paperwork in the processing of classification, revised its reduction-in-force procedures and proposed other innovative interventions; emphasizing partnerships among management, employees, and unions, and delegating other authorities to line managers.

II. Introduction

Purpose

The purpose of this notice is to make a technical correction to the definition of competitive area. The correction is hereby made to the **Federal Register**, Part V, Science and Technology Reinvention Laboratory Personnel Demonstration Project at the Aviation Research, Development, and Engineering Center (AVRDEC); Notice, Volume 62, Number 124, Friday, June 27, 1997; page 34920, column one, under F. Revised Reduction-in-Force (RIF) Procedures, Introduction. Lines 1–12 are corrected to read:

> Modifications include limiting competitive area, as defined below, and increasing the emphasis on performance in the RIF process. Retention criteria are in the following order: tenure, veterans' preference, service credit adjusted by a sum of the last three performance ratings. Current reduction-in-force regulations/procedures have been adjusted in the context of the occupational family and the payband classification system.

All other provisions of the approved AVRDEC Personnel Management Demonstration Project will apply. Employee notification will be made by delivery of copies of the amendment to union officials, to AVRDEC employees included in the project, and by posting on the Internet.

[FR Doc. 99–5581 Filed 3–5–99; 8:45 am]

BILLING CODE 6325–01–P

SECURITIES AND EXCHANGE COMMISSION

Sunshine Act Meeting

Notice is hereby given, pursuant to the provisions of the Government in the Sunshine Act, Pub. L. 94–409, that the Securities and Exchange Commission will hold the following meeting during the week of March 8, 1999.

A closed meeting will be held on Thursday, March 11, 1999, at 11:00 a.m.

Commissioners, Counsel to the Commissioners, the Secretary to the Commission, and recording secretaries will attend the closed meeting. Certain staff members who have an interest in the matters may also be present.

The General Counsel of the Commission, or his designee, has certified that, in his opinion, one or more of the exemptions set forth in 5 U.S.C. 552b(c)(4), (8), (9)(A) and (10)

and 17 CFR 200.402(a)(4), (8), (9)(i) and (10), permit consideration of the scheduled matters at the closed meeting.

Commissioner Unger, as duty officer, voted to consider the items listed for the closed meeting in a closed session.

The subject matter of the closed meeting scheduled for Thursday, March 11, 1999, at 11:00 a.m., will be:

Institution of administration proceedings of an enforcement nature.
Institution of injunction actions.

At times, changes in Commission priorities require alterations in the scheduling of meeting items. For further information and to ascertain what, if any, matters have been added, deleted or postponed, please contact the Office of the Secretary at (202) 942–7070.

Dated: March 4, 1999.

Jonathan G. Katz,

Secretary.

[FR Doc. 99–5736 Filed 3–4–99; 11:41 am]

BILLING CODE 5010–01–M

SMALL BUSINESS ADMINISTRATION

Data Collection Available for Public Comments and Recommendations

ACTION: Notice and request for comments.

SUMMARY: In accordance with the Paperwork Reduction Act of 1995, this notice announces the Small Business Administration's intentions to request approval on a new, and/or currently approved information collection.

DATES: Comments should be submitted on or before May 7, 1999.

FOR FURTHER INFORMATION CONTACT: Curtis B. Rich, Management Analyst, Small Business Administration, 409 3rd Street, S.W., Suite 5000, Washington, DC 20416. Phone Number: 202–205–6629.

SUPPLEMENTARY INFORMATION:

Title: ''Application for Designation as an Associate Development Company as a Certified Development Company''

Form No: 1849.

Description of Respondents: Certified Development Companies.

Annual Responses: 10.

Annual Burden: 200.

Title: ''Associate Development Company Annual Report Guide.''

Form No: 1850.

Description of Respondents: Associate Certified Development Companies.

Annual Responses: 100.

Annual Burden: 100.

Comments: Send all comments regarding this information collection to, Claudia Jordan, Program Assistant, Office of Financial Assistance, Small Business Administration, 409 3rd Street S.W., Suite 8300, Washington, DC 20416. Phone No: 202–205–6491.

Send comments regarding whether this information collection is necessary for the proper performance of the function of the agency, accuracy of burden estimate, in addition to ways to minimize this estimate, and ways to enhance the quality.

Jacqueline K. White,

Chief, Administrative Information Branch.

[FR Doc. 99–5541 Filed 3–5–99; 8:45 am]

BILLING CODE 8025–01–P

SMALL BUSINESS ADMINISTRATION

New Markets Lending Company Pilot Loan Program; Notice of Meeting

AGENCY: Small Business Administration.

ACTION: To accommodate scheduling conflicts in the lending community and with trade associations, the SBA is rescheduling a Public Meeting on SBA's proposed New Markets Lending Company (NMLC) program originally scheduled for March 11, 1999. (This hearing was reported in a **Federal Register** Notice published March 1, 1999.) The NMLC Public Hearing is rescheduled for 9:30 a.m. to 12:00 p.m., March 15, 1999, at SBA's Washington District Office Conference Room, 1110 Vermont Avenue, NW, Washington, DC 20005.

SUMMARY: The SBA recognizes that many segments of the small business community continue to have difficulty accessing capital in the commercial loan markets. To assist these New Markets small businesses, the Agency plans to develop and test several innovative new programs and initiatives designed to more efficiently and effectively deliver SBA financing to these markets. The proposed NMLC program is one of these initiatives. SBA envisions the program as a limited term, limited participation SBA pilot program under which the Agency will select approximately ten unique, non-depository lending institutions to make SBA guaranteed loans targeted to New Markets small businesses. This pilot will be part of the Agency's 7(a) loan program, which provided guaranties on loans to approximately 42,000 small businesses for about $9 billion in FY 1998.

SBA expects to define New Markets under the program as current and prospective small businesses owned by minorities, women, veterans, and persons with disabilities, who are underrepresented in the population of business owners compared to their representation in the overall population, as well as businesses located or locating in Low and Moderate Income urban and rural areas.

SBA is continuing to develop criteria for participation in the program, but participants are expected to be selected competitively using criteria that may include, among others, the following:

Management Capability

The applicant entity or its management team must demonstrate appropriate experience in managing a loan underwriting, loan making, loan collection, and loan liquidation operation;

Adequate Capitalization

A minimum capitalization, including leverage limitations to reflect both balance sheet and off balance sheet assets, will be required. (A variety of financing structures will be considered, but a minimum equity injection of $3–$5 million is being considered);

Commitment to Borrower's Development

Applicant must demonstrate a continuing commitment to the development of the borrower's management capabilities; and

Public Purpose

Participants must aggressively and continuously target a range of SBA defined New Markets communities.

The Agency's monitoring and oversight of NMLCs will include annual safety and soundness examinations, periodic reviews of lender effectiveness in reaching targeted markets, and compliance reviews required of other SBA lenders. SBA will develop program guidelines and procedures shortly and expects to implement the program by October 1, 1999.

Hearing: SBA will hold a public hearing to obtain comments and suggestions from the public to assist in developing the NMLC concept. Interested parties will be given a reasonable time for an oral presentation and may submit written statements of their oral presentation in advance. If you wish to make a presentation, please contact Ms. Lula M. Gardner at (202) 205–6485 at least five days before the hearing. If a large number of participants desire to make statements, a time limitation on each presentation will be imposed.

Members of the hearing panel may ask questions of the speaker, but speakers will not be allowed to question each other. Please submit written questions in advance to the Chair. If the Chair determines them to be relevant, the

Chair will direct them to the appropriate panel member.

DATES: March 15, 1999, 9:30 a.m. to 12:30 p.m.

LOCATION: SBA's Washington District Office Conference Room, 1110 Vermont Avenue, NW, Washington, DC 20005.

POSSIBLE ISSUES: The SBA requests that speakers address the following issues:

- Can this concept help increase SBA lending to New Markets?
- How should SBA select NMLC participants?
- Should the SBA require that a minimum percentage of lending by each NMLC be directed to New Markets? If so, what should that minimum percentage be?
- How many firms should be allowed to participate?
- What, if any, time limit should be established for the program?
- What level of capitalization should SBA require of NMLC pilot participants?
- What loan volume should SBA expect from NMLCs?
- What oversight should SBA apply to this program?
- Should SBA give these firms PLP and/or SBA *Express* authority?
- What incentives should SBA consider to encourage these firms to lend in non-traditional markets?
- What support should SBA provide lenders to address these markets?
- What will be the likely impact of this program on existing SBA lenders?
- In lieu of the proposed NMLC program, should SBA open the SBLC program to additional participants?

FOR FURTHER INFORMATION CONTACT: Charles Thomas, Chief, Pilot Operations, Office of Financial Assistance, (202) 205–6656.

Jane Palsgrove Butler,

Associate Administrator for Financial Assistance.

[FR Doc. 99–5540 Filed 3–5–99; 8:45 am]

BILLING CODE 8025–01–P

SOCIAL SECURITY ADMINISTRATION

Privacy Act of 1974; As Amended; Report of New System of Records and Routine Uses

AGENCY: Social Security Administration.

ACTION: New System of Records and Routine Uses.

SUMMARY: In accordance with the Privacy Act (5 U.S.C. 552a(e)(4)), we are issuing public notice of our intent to establish a new system of records. The proposed system of records is entitled the Prisoner Update Processing System (PUPS), SSA/OPB, SSA–099. The proposed system will maintain information collected for use in connection with enforcement of the nonpayment of benefits provisions of the Social Security Act (the Act) affecting certain inmates of public institutions and prisoners, as well as certain other confined individuals. We are also proposing routine uses of information which will be maintained in the system in accordance with 5 U.S.C. 552a(e)(11). We invite public comments on the proposed system and the routine uses.

DATES: We filed a report of the proposed system with the President of the Senate, the Speaker of the House of Representatives, and the Director, Office of Information and Regulatory Affairs, Office of Management and Budget on February 23, 1999. The proposed system, including the proposed routine uses, will become effective on April 5, 1999, unless we receive comments on or before that date which would result in a contrary determination.

ADDRESSES: Interested individuals may comment on this publication by writing to the SSA Privacy Officer, Social Security Administration, 3–A–6 Operations Building, 6401 Security Boulevard, Baltimore, Maryland 21235. All comments received will be available for public inspection at the above address.

FOR FURTHER INFORMATION CONTACT: Mr. Willie J. Polk, Office of Disclosure Policy, Social Security Administration, 3–A–6 Operations Building, 6401 Security Boulevard, Baltimore, Maryland 21235, telephone (410) 965–1753.

SUPPLEMENTARY INFORMATION:

I. Purpose of the Proposed System

Section 202(x) of the Social Security Act (the Act) (42 U.S.C. 402(x)) provides for nonpayment of Retirement, Survivors, or Disability Insurance benefits under title II of the Act to individuals confined in a jail, prison, or other penal institution or correctional facility pursuant to conviction of an offense punishable by imprisonment for more than one year (regardless of the sentence imposed), and to individuals who are confined by court order in an institution at public expense in connection with: (a) A verdict or finding that the individual is guilty but insane with respect to an offense punishable by imprisonment for more than one year, (b) a verdict or finding that the individual is not guilty of such an offense by reason of insanity, (c) a finding that such individual is incompetent to stand trial under an allegation of such an offense, (d) a similar verdict or finding with respect to such an offense based on similar factors (such as mental defect or mental incompetence). Similarly, section 1611(e)(1)(A) of the Act (42 U.S.C. 1382(e)(1)(A)) provides for nonpayment of Supplemental Security Income (SSI) benefits under title XVI of the Act to any individual for any month throughout which the individual is an inmate of a public institution. Section 1611(e)(1)(I)(i) of the Act provides for incentive payments to be made by SSA to inmate data sources for information leading to suspension of SSI payments to an SSI recipient.

The proposed PUPS system will maintain information collected for the purpose of determining whether an individual is subject to the above-cited payment restriction provisions, and provide a control mechanism for any inmate or confinement alerts generated by relevant computer matching programs or by informal reports to SSA regarding an individual's confinement. It will facilitate the suspension of benefits where appropriate and the reinstatement of benefits to released inmates and other confined persons. Inmates considered possibly subject to the nonpayment of benefit provisions will be afforded all due process rights under applicable statutes, regulations, and procedures before any action is taken to suspend their benefits.

II. Collection and Maintenance of Data in the Proposed System

The proposed PUPS system will primarily contain information about persons reported to SSA as confined individuals under Privacy Act computer matching agreements for the provision of records of confined individuals to SSA. (Certain information on confined individuals is reported to SSA under agreements which are, along with any information exchanged pursuant to the agreements, wholly exempt from the Privacy Act requirements. This data will *not* be incorporated into PUPS. See section 1611(e)(1)(I) of the Act, 42 U.S.C. 1382(e)(1)(I).) The records in the system will include those of individuals reported by jails, prisons, other penal institutions or correctional facilities and certain mental health institutions. We also may receive and incorporate into the system relevant information from individuals and certain other third-party sources, such as news media, etc., under informal reporting arrangements. The system will maintain information on both title II beneficiaries entitled to RSDI benefits and title XVI SSI recipients, as well as non-beneficiaries and non-recipients who may have

claims in some stage of SSA's adjudicative process. The specific information maintained will include the individual's name, Social Security number, date of birth, sex, date of conviction, date of confinement, release date, inmate status code, and such other information as may be supplied or acquired during the benefit suspension or reinstatement process. The information will be retrieved by Social Security number.

III. Proposed Routine Uses of Information in the System

We are proposing to establish routine uses of information which will be maintained in the system as discussed below.

1. Disclosure to third-party contacts in situations where the party to be contacted has, or is expected to have, information relating to the individual's eligibility for, or entitlement to, benefits under a Social Security program when the data are needed to establish the validity of evidence or to verify the accuracy of information presented by the individual, and it concerns one or more of the following:

(a) His or her eligibility for benefits under a Social Security program;

(b) The amount of his or her benefit payment;

(c) Any case in which the evidence is being reviewed as a result of suspected fraud, concern for program integrity, quality appraisal, or evaluation and measurement activities.

We contemplate disclosing information under this routine use as necessary to enable SSA to fully develop and investigate information it receives from reporting sources with regard to confined individuals, to ensure the accuracy of such information, to contact the reporting source, or other sources, for additional information, if necessary, and to make certain that any suspension action taken is proper.

2. Disclosure to third-party contacts where necessary to establish or verify information presented by representative payees or payee applicants.

We contemplate disclosing information under this routine use in situations paralleling (1) above except that, in situations where SSA will be developing benefit eligibility through a representative payee, we will disclose information presented by such a payee for verification purposes.

3. Disclosure to the Department of Justice (DOJ) for:

(a) Investigating and prosecuting violations of the Act to which criminal penalties attach;

(b) Representing the Commissioner of Social Security in litigation relative to this system of records;

(c) Investigating issues of fraud by agency officers or employees, or violations of civil rights.

We contemplate disclosing information under this routine use as necessary to assist DOJ in pursuing possible violations of section 208 of the Act (42 U.S.C. 408), facilitate representation of the Commissioner of Social Security where necessary in litigation relative to this system of records and to combat possible fraud by agency officers or employees in connection with this system of records.

4. Disclosure to the Office of the President for the purpose of responding to an individual pursuant to an inquiry received from that individual or from a third party on his/her behalf.

We contemplate disclosing information under this routine use as necessary to enable the Office of the President to respond to an individual pursuant to an inquiry from that individual or from a third party on his or her behalf about a Social Security matter involving the individual.

5. Disclosure to a congressional office in response to an inquiry from that office made at the request of the subject of a record.

We contemplate disclosing information under this routine use only in situations in which an individual may ask his or her congressional representative to intercede in an SSA matter on his or her behalf. Information would be disclosed when the congressional representative makes an inquiry and presents evidence that he or she is acting on behalf of the individual whose record is requested.

6. Disclosure in response to legal process or interrogatories relating to the enforcement of an individual's child support or alimony obligations, as required by sections 459 and 461 of the Act.

We contemplate disclosing information under this routine use only where the specific requirements set forth in sections 459 and 461 of the Act are met, and only to the extent necessary to enable SSA to comply with its legal obligations under those sections of the Act.

7. Disclosure to Federal, State, or local agencies, (or agents on their behalf) for administering income-maintenance or health-maintenance programs (including programs under the Act).

We contemplate disclosing information under this routine use to various other Federal, State, or local agencies to assist such agencies in the administration of income-maintenance and/or health-maintenance programs whose character, nature and purpose are similar to SSA programs. Examples of such programs are veterans benefits, food stamps, and Medicaid. The purpose of these disclosures is to assist such agencies in establishing eligibility for such programs, to provide information necessary to enforce eligibility restrictions in such programs, and to combat and prevent fraud, waste and abuse in those programs.

8. Disclosure to third-party contacts (including private collection agencies under contract to SSA) for the purpose of assisting SSA in recovering overpayments.

We contemplate disclosing information under this routine use only for the purpose of enhancing and improving SSA's debt collection activities and only as permitted by statute.

9. Disclosure to contractors and other Federal agencies, as necessary, for the purpose of assisting SSA in the efficient administration of its programs.

We contemplate disclosing information under this routine use only in situations in which SSA may enter into a contractual or similar agreement with a third party to assist in accomplishing an agency function relating to this system of records.

10. Disclosure to DOJ, a court or other tribunal, or other third party before such tribunal when:

(a) SSA, or any component thereof; or

(b) Any SSA employee in his/her official capacity; or

(c) Any SSA employee in his/her individual capacity where DOJ (or SSA where it is authorized to do so) has agreed to represent the employee; or

(d) The United States or any agency thereof where SSA determines that the litigation is likely to affect the operations of SSA or any of its components;

is a party to litigation or has an interest in such litigation, and SSA determines that the use of such records by DOJ, the court or other tribunal is relevant and necessary to the litigation, provided, however, that in each case, SSA determines that such disclosure is compatible with the purpose for which the records were collected.

We contemplate disclosing information under this routine use, as necessary, to enable DOJ, a court or other tribunal, to effectively defend SSA, its components or employees or when SSA has an interest in litigation involving the proposed system of records and/or records contained therein.

IV. Compatibility of Proposed Routine Uses

The Privacy Act (5 U.S.C. 552a(7) and (b)(3)) and our disclosure regulation (20 CFR part 401) permit us to disclose information under a routine use for a purpose which is compatible with the purpose for which we collected the information. Section 401.150 permits us to disclose information under a routine use where necessary to assist in carrying out SSA programs or similar programs of other agencies. The proposed routine uses will ensure efficient administration of SSA's relevant suspension and incentive payment programs. They will also assist in implementing other programs which have the same purposes as SSA programs where disclosure of information to such other programs is relevant to determinations of eligibility, benefit amounts or other matters of benefit status in those other programs. Thus, the proposed routine uses are consistent with the Privacy Act and SSA's regulatory criteria.

V. Records Storage Medium and Safeguards

We will maintain information in the system on magnetic media (e.g., magnetic tapes and magnetic diskette) in a secure storage area. Only authorized SSA personnel who have a need for the information in the performance of their official duties will be permitted access to the information. When records are electronically transmitted between SSA's central office and field office locations, safeguards include a lock/unlock password system, exclusive use of leased telephone lines, a terminal oriented transaction matrix and secured printers.

VI. Effect of the System on Individuals

The proposed system will maintain information which could lead to suspension of Social Security title II/title XVI benefits to certain confined individuals. These suspension actions, however, would only occur after complete development by SSA of the facts of each case, and after each individual has been afforded all appropriate due process and appeal rights. Thus, we do not anticipate that the system will have any unwarranted adverse effect on the privacy of individuals.

Dated: February 23, 1999.

Kenneth S. Apfel,

Commissioner of Social Security.

SSA–099

SYSTEM NAME:

Prisoner Update Processing System (PUPS), SSA/OPB.

SECURITY CLASSIFICATION:

None.

SYSTEM LOCATION:

Social Security Administration, Office of Systems Operations, 6401 Security Boulevard, Baltimore, MD 21235

CATEGORIES OF INDIVIDUALS COVERED BY THE SYSTEM:

Persons reported to the Social Security Administration, under Privacy Act computer matching agreements as well as certain informal reporting arrangements, as confined in certain institutions. Certain data regarding confined individuals is reported to SSA under agreements which are, along with any information exchanged pursuant to the agreements, wholly exempt from the Privacy Act's requirements. See section 1611(e)(1)(I) of the Social Security Act (Act), 42 U.S.C. 1386(e)(i)(I). The records in the system will include those of individuals reported by jails, prisons, other penal institutions or correctional facilities, certain mental health institutions and various third parties, including media sources. The records included will be those of Retirement, Survivors, or Disability Insurance (RSDI) and Supplemental Security Income (SSI) beneficiaries, as well as non-beneficiaries who may have claims in some stage of SSA's adjudicative process.

CATEGORIES OF RECORDS IN THE SYSTEM:

PUPS will contain all identifying information requested by SSA and supplied by the reporting source, including the individual's name, Social Security number, date of birth, sex, date of conviction, date of confinement, release date, inmate status code, and such other information as may be supplied or acquired during the benefit suspension or reinstatement process.

AUTHORITY FOR MAINTENANCE OF THE SYSTEM:

Sections 202(x)(1) and 1611(e)(1) of the Act.

PURPOSE(S):

PUPS will record inmate information in support of the above cited provisions mandating nonpayment of RSDI and SSI benefits to certain confined individuals. All information on the system will be maintained under each affected individual's Social Security number. The PUPS system will expedite the handling of inmate reports in SSA field offices, and provide a control mechanism for any inmate or confinement alerts generated by SSA's computer matching programs or by informal reports to SSA regarding an individual's confinement. It will facilitate the suspension of benefits to appropriate individuals, and the reinstatement of benefits to beneficiaries when such individuals are released from confinement.

ROUTINE USES OF RECORDS MAINTAINED IN THE SYSTEM, INCLUDING CATEGORIES OF USERS AND THE PURPOSES OF SUCH USES:

Disclosure may be made for routine uses as indicated below:

1. Disclosure to third-party contacts in situations where the party to be contacted has, or is expected to have, information relating to the individual's eligibility for, or entitlement to, benefits under a Social Security program when the data are needed to establish the validity of evidence or to verify the accuracy of information presented by the individual, and it concerns one or more of the following:

(a) His or her eligibility for benefits under a Social Security program;

(b) The amount of his or her benefit payment;

(c) Any case in which the evidence is being reviewed as a result of suspected fraud, concern for program integrity, quality appraisal, or evaluation and measurement activities.

2. Disclosure to third-party contacts where necessary to establish or verify information presented by representative payees or payee applicants.

3. Disclosure to the Department of Justice (DOJ) for:

(a) Investigating and prosecuting violations of the Act to which criminal penalties attach;

(b) Representing the Commissioner of Social Security;

(c) Investigating issues of fraud by agency officers or employees, or violations of civil rights.

4. Disclosure to the Office of the President for the purpose of responding to an individual pursuant to an inquiry received from that individual or from a third party on his/her behalf.

5. Disclosure to a congressional office in response to an inquiry from that office made at the request of the subject of a record.

6. Disclosure in response to legal process or interrogatories relating to the enforcement of an individual's child support or alimony obligations, as required under sections 459 and 461 of the Act.

7. Disclosure to Federal, State, or local agencies, (or agents on their behalf) for administering income-maintenance or health-maintenance programs (including programs under the Act).

8. Disclosure to third-party contacts (including private collection agencies under contract to SSA) for the purpose of assisting SSA in recovering overpayments.

9. Disclosure to contractors and other Federal agencies, as necessary, for the purpose of assisting SSA in the efficient administration of its programs.

10. Disclosure to DOJ, a court or other tribunal, or other third party before such tribunal when:

(a) SSA, or any component thereof; or

(b) Any SSA employee in his/her official capacity; or

(c) Any SSA employee in his/her individual capacity where DOJ (or SSA where it is authorized to do so) has agreed to represent the employee; or

(d) The United States or any agency thereof where SSA determines that the litigation is likely to affect the operations of SSA or any of its components;

is a party to litigation or has an interest in such litigation, and SSA determines that the use of such records by DOJ, the court or other tribunal is relevant and necessary to the litigation, provided, however, that in each case, SSA determines that such disclosure is compatible with the purpose for which the records were collected.

POLICIES AND PRACTICES FOR STORING, RETRIEVING, ACCESSING, RETAINING AND DISPOSING OF RECORDS IN THE SYSTEM:

STORAGE:

Records are stored in magnetic media (e.g., magnetic tape and magnetic diskette).

RETRIEVABILITY:

Records in this system are indexed and retrieved by SSN.

SAFEGUARDS:

Security measures include the use of access codes to enter the computer system which will maintain the data, and storage of the computerized records in secured areas which are accessible only to employees who require the information in performing their official duties. SSA personnel who have access to the data will be informed of the criminal penalties of the Privacy Act for unauthorized access to or disclosure of information maintained in this system. For records electronically transmitted between SSA's central office and field office locations, safeguards include a lock/unlock password system, exclusive use of leased telephone lines, a terminal oriented transaction matrix and secured printers.

RETENTION AND DISPOSAL:

SSA will retain PUPS records for the period of time required for any processing related to the relevant data exchange and then, within 12 months, will either return the records to the source or destroy the records, unless the records must be retained in individual claim folders for documentation purposes and/or to meet evidentiary requirements. In that instance, the records eventually will be retired to the Federal Records Center and destroyed, in accordance with the applicable Federal Records Retention Schedule (44 U.S.C. 3303a) and any other relevant standards established by SSA and the National Archives and Records Administration.

SYSTEM MANAGER(S) AND ADDRESS:

Director, Division of Payment Policy, Office of Program Benefits, Social Security Administration, 6401 Security Boulevard , Baltimore, Maryland 21235.

NOTIFICATION PROCEDURE:

An individual can determine if this system contains a record about him/her by contacting the most convenient Social Security field office and providing his/her name, Social Security number, address, and proper identification. (Furnishing the SSN is voluntary, but it will make searching for an individual's record easier and prevent delay). An individual may also write to the System Manager shown above.

An individual requesting notification of records in person must provide at least one piece of tangible identification such as a driver's license, passport, voter registration card, etc., to verify his/her identity. If an individual does not have identification papers sufficient to establish his/her identity, that individual must certify in writing that he/she is the person they claim to be and that they understand that the knowing and willful request for or acquisition of a record pertaining to an individual under false pretenses is a criminal offense (see 5 U.S.C. 552a(i)(1)(3)). If notification is requested by telephone, an individual must verify his/her identity by providing identifying information which parallels the record to which notification is being requested. If it is determined that the identifying information provided by telephone is insufficient, the individual will be required to submit a request in writing or in person. If a request for notification is submitted by mail, an individual must include a notarized request to SSA to verify his/her identity or must certify in the request that he/she is the person they claim to be and that they understand that the knowing and willful request for or acquisition of a record pertaining to an individual under false pretenses is a criminal offense. These procedures are in accordance with SSA Regulations 20 CFR 401.45.

RECORD ACCESS PROCEDURES:

Same as notification procedures. Requesters should also reasonably specify the record contents being sought. These procedures are in accordance with SSA Regulations 20 CFR 401.45.

CONTESTING RECORD PROCEDURES:

Same as notification procedures. Requesters should also reasonably identify the record, specify the information they are contesting and state the corrective action sought and the reasons for the correction with supporting justification showing their reasons for believing that the record should be amended. These procedures are in accordance with SSA Regulations 20 CFR 401.65.

RECORD SOURCE CATEGORIES:

Data for the PUPS are secured primarily from various facilities with which SSA has appropriate arrangements for reporting of such information including jails, prisons, other penal institutions or correctional facilities, departments or divisions of corrections or correctional services, and certain mental health facilities. Data is also reported by individuals and certain other third party sources, such as news media, etc.

SYSTEMS EXEMPTED FROM CERTAIN PROVISIONS OF THE ACT:

None.

[FR Doc. 99–5587 Filed 3–5–99; 8:45 am]

BILLING CODE 4190–29–P

DEPARTMENT OF STATE

[Public Notice No. 2996]

Shipping Coordinating Committee Subcommittee on Safety of Life at Sea Working Group on Stability and Load Lines and on Fishing Vessels Safety; Notice of Meeting

The Working Group on Stability and Load Lines and on Fishing Vessels Safety of the Subcommittee on Safety of Life at Sea will conduct an open meeting at 1 p.m. on Thursday, April 1, 1999, in Room 6103, at U.S. Coast Guard Headquarters, 2100 Second Street, SW., Washington, DC 20593–0001. This meeting will discuss the upcoming 43rd Session of the Subcommittee on Stability and Load Lines and on Fishing Vessels Safety (SLF) and associated bodies of the International Maritime Organization (IMO) which is tentatively scheduled for September 11–15, 2000, at the IMO Headquarters in London, England.

Items of discussion will include the following:

a. Review of results from SLF 42,

b. Harmonization of damage stability provisions in the IMO instruments,

c. Safety aspects of ships engaged in a ballast water exchange,

d. Revision of the technical regulations of Load Lines Convention, and

e. Development of the damage consequence diagrams for inclusion in damage control plan guidelines.

Members of the public may attend this meeting up to the seating capacity of the room. Interested persons may seek information by writing: Mr. Paul Cojeen, U.S. Coast Guard Headquarters, Commandant (G–MSE–2), Room 1308, 2100 Second Street, SW., Washington, DC 20593–0001 or by calling (202) 267–2988.

Dated: March 2, 1999.

Stephen M. Miller,

Executive Secretary, Shipping Coordinating Committee.

[FR Doc. 99–5620 Filed 3–5–99; 8:45 am]

BILLING CODE 4710–07–P

DEPARTMENT OF STATE

[Public Notice No. 2997]

Shipping Coordinating Committee; Notice of Meeting

The U.S. Shipping Coordinating Committee (SHC) will conduct an open meeting at 10:00 a.m., on Thursday, April 8, 1999, in Room 2415 at U.S. Coast Guard Headquarters, 2100 Second Street, S.W., Washington, D.C. The purpose of this meeting is twofold: (1) to report on the results of the Diplomatic Conference on the Arrest of Ships, held March 01–12, 1999 in Geneva; and (2) to prepare for the Seventy Ninth Session of the International Maritime Organization Legal Committee (LEG 79), to be held April 19–23, 1999 in London.

This SHC meeting will address the following topics: the Convention on the Arrest of ships; the draft IMO Code or Guidelines on Shipowners' Responsibilities in Respect of Maritime Claims; the draft Protocol to the Athens Convention relating to passenger claims; a draft convention regarding bunker fuel spills; and a draft convention regarding wreck removal.

Members of the U.S. Delegation to LEG 79 will be attending a meeting, in London on April 16, regarding international efforts at ratification and implementation of the Hazardous and Noxious Substances Convention, adopted in London in May, 1996. This SHC meeting will be a further opportunity for interested members of the public to express their views on whether the United States should ratify the HNS Convention.

Members of the public are invited to attend the SHC meeting, up to the seating capacity of the room. For further information, or to submit views in advance of the meeting, please contact Captain Malcolm J. Williams, Jr., or Lieutenant William G. Rospars, U.S. Coast Guard, Office of Maritime and International Law (G–LMI), 2100 Second Street, S.W., Washington, D.C. 20593–0001; telephone (202) 267–1527; fax (202) 267–4496.

Dated: March 2, 1999.

Stephen M. Miller,

Executive Secretary, Shipping Coordinating Committee 2.

[FR Doc. 99–5621 Filed 3–5–99; 8:45 am]

BILLING CODE 4710–07–P

DEPARTMENT OF TRANSPORTATION

Federal Aviation Administration

Noise Exposure Map Notice; Receipt of Noise Compatibility Program and Request for Review, Oakland County International Airport, Pontiac, MI

AGENCY: Federal Aviation Administration, DOT.

ACTION: Notice.

SUMMARY: The Federal Aviation Administration (FAA) announces its determination that the Noise Exposure Maps (NEMs) submitted by Oakland County International Airport under the provisions of Title I of the Aviation Safety and Noise Abatement Act of 1979 (Pub. L. 96–193) and 14 CFR Part 150 are in compliance with applicable requirements. The FAA also announces that it is reviewing a proposed Noise Compatibility Program (NCP) that was submitted for Oakland County International Airport under Part 150 in conjunction with the NEMs, and that this program will be approved or disapproved on or before August 25, 1999.

EFFECTIVE DATE: The effective date of the FAA's determination on the NEMs and of the start of its review of the associated NCP is February 26, 1999. The public comment period ends April 27, 1999.

FOR FURTHER INFORMATION CONTACT: The Federal Aviation Administration, Great Lakes Region, Detroit Airports District Office, Willow Run Airport, East, 8820 Beck Road, Belleville, Michigan 48111, to the attention of Mr. Gary Migut, Program Manager, (734) 487–7278. Comments on the proposed NCP should also be submitted to the above office.

SUPPLEMENTARY INFORMATION: This notice announces that the FAA finds that the NEMs submitted for Oakland County International Airport are in compliance with applicable requirements of Part 150, effective February 26, 1999. The FAA is reviewing an NCP for Oakland County International Airport, which will be approved or disapproved on or before August 25, 1999. This notice also announces the availability of this program for public review and comment.

Under Section 103 of Title I of the Aviation Safety and Noise Abatement Act of 1979 (hereinafter referred to as ''the Act''), an airport operator may submit to the FAA NEMs which meet applicable regulations and which depict noncompatible land uses as of the date of submission of such maps, a description of projected aircraft operations, and the ways in which such operations will affect such maps. The Act requires such maps to be developed in consultation with interested and affected parties in the local community, government agencies, and persons using the airport.

An airport operator who has submitted NEMs that are found by the FAA to be in compliance with the requirements of Federal Aviation Regulations (FAR) Part 150, promulgated pursuant to Title I of the Act, may submit an NCP for FAA approval that sets forth the measures the operator has taken or proposes for the reduction of existing noncompatible uses and for the prevention of the introduction of additional noncompatible uses.

Oakland County International Airport submitted to the FAA on February 24, 1999, the NEMs, descriptions, and other documentation, which were produced during the proposed Oakland County International Airport NCP, dated February 23, 1999. It was requested that the FAA review this material as the NEMs, as described in section 103(a)(1) of the ACT, and that the noise mitigation measures, to be implemented jointly by the airport and surrounding communities, be approved as an NCP under section 104(b) of the Act.

The FAA has completed its review of the NEMs and related description submitted by the Oakland International Airport. The FAA has determined that the NEMs for Oakland County International Airport are in compliance with applicable requirements. This determination is effective on February

26, 1999. The FAA's determination on an airport operator's NEMs is limited to a finding that the maps were developed in accordance with the procedures contained in Appendix A of FAR Part 150. Such determination does not constitute approval of the applicant's data, information or plans, or a commitment to approve an NCP or to fund the implementation of that program.

If questions arise concerning the precise relationship of specific properties to noise exposure contours depicted on a noise exposure map submitted under Section 103 of the Act, it should be noted that the FAA is not involved in any way in determining the relative locations of specific properties with regard to the depicted noise contours, or in interpreting the noise exposure maps to resolve questions concerning, for example, which properties should be covered by the provisions of Section 107 of the Act. These functions are inseparable from the ultimate land use control and planning responsibilities of local government. These local responsibilities are not changed in any way under Part 150 or through the FAA's review of noise exposure maps. Therefore, the responsibility for the detailed overlaying of noise exposure contours onto the map depicting properties on the surface rests exclusively with the airport operator which submitted those maps, or with those public agencies and planning agencies with which consultation is required under Section 103 of the Act. The FAA has relied on the certification by the airport operator, under Section 150.21 of FAR Part 150, that the statutorily required consultation has been accomplished.

The FAA has formally received the NCP for Oakland County International Airport, also effective on February 26, 1999. Preliminary review of the submitted material indicates that it conforms to the requirements for the submittal of NCPs, but that further review will be necessary prior to approval or disapproval of the program. The formal review period, limited by law to a maximum of 180 days, will be completed on or before August 25, 1999.

The FAA's detailed evaluation will be conducted under the provisions of 14 CFR Part 150, section 150.33. The primary considerations in the evaluation process are whether the proposed measures may reduce the level of aviation safety, create an undue burden on interstate or foreign commerce, or be reasonably consistent with obtaining the goal of reducing existing noncompatible land uses and preventing the introduction of additional noncompatible land uses.

Interested persons are invited to comment on the proposed program with specific reference to these factors. All comments, other than those properly addressed to local land use authorities, will be considered by the FAA to the extent practicable. Copies of the notice exposure maps and of the FAA's evaluation of the maps are available for examination at the following locations:

Federal Aviation Administration, Great Lakes Region, Airports Division Office, 2300 East Devon Avenue, Room 269, Des Plaines, Illinois 60018

Federal Aviation Administration, Detroit Airports District Office, Willow Run Airport, East, 8820 Beck Road, Belleville, Michigan 48111

Mr. Karl Randall, Manager of Aviation, Oakland County International Airport, 6500 Highland Road, Waterford, Michigan 48327–1649.

Questions may be directed to the individual named above under the heading, **FOR FURTHER INFORMATION CONTACT**.

Issued in Belleville, Michigan, on February 26, 1999.

Ernest P. Gubry,

Acting Assistant Manager, Detroit Airports District Office FAA Great Lakes Region.

[FR Doc. 99–5602 Filed 3–5–99; 8:45 am]

BILLING CODE 4910–13–M

DEPARTMENT OF TRANSPORTATION

Federal Aviation Administration

Environmental Impact Statement; Hartsfield Atlanta International Airport, Atlanta, GA

SUMMARY: The FAA intends to prepare an Environmental Impact Statement (EIS) to address environmental and related impacts expected to be associated with the extension of a fifth runway and associated improvements at Hartsfield Atlanta International Airport located at Atlanta, Georgia.

FOR FURTHER INFORMATION CONTACT: Terry Washington, Federal Aviation Administration, Atlanta, Airports District Office, 1701 Columbia Avenue, Suite 2–260, College Park, Georgia 30337–2747 (404) 305–7143.

SUPPLEMENTARY INFORMATION: an environmental assessment resulting in a Finding of No Significant Impact (FONSI) was completed in 1994 for a 6,000-foot fifth runway south of the airport. The FAA will now prepare an EIS for a proposed project to extend the fifth runway, resulting in a 9,000-foot unrestricted air carrier runway with associated taxiways and other related facilities.

Construction of the proposed 6,000-foot runway will be ongoing while the EIS is underway.

The FAA plans to coordinate with Federal, State and local agencies which have jurisdiction by law or special expertise with respect to any environmental impacts associate with the proposed project.

The EIS will also evaluate cumulative impacts anticipated to occur as a result of the implementation of other foreseeable future improvements at the Hartsfield Atlanta International Airport.

Public Scoping

The Federal Aviation Administration will hold a scoping meeting to solicit input from Federal, State, and local agencies which have jurisdiction by law or have a specific expertise with respect to any environmental impacts associated with the project. In addition, public scoping meetings will be held and the public may submit written comments on the scope of the environmental study to the address identified in the **FOR FURTHER INFORMATION CONTACT** paragraph. A Public Notice issued at a later date will provide the date, time and place of the scoping meetings and the period for written comments.

Issued in Atlanta, Georgia on March 1, 1999.

Scott Seritt,

Manager, Atlanta Airports District Office.

[FR Doc. 99–5608 Filed 3–5–99; 8:45 am]

BILLING CODE 4910–13–M

DEPARTMENT OF TRANSPORTATION

Research and Special Programs Administration

Office of Hazardous Materials Safety; Notice of Delays in Processing of Exemption Applications

AGENCY: Research and Special Programs Administration, DOT.

ACTION: List of applications delayed more than 180 days.

SUMMARY: In accordance with the requirements of 49 U.S.C. 5117(c), RSPA is publishing the following list of exemption applications that have been in process for 180 days or more. The reason(s) for delay and the expected completion date for action on each application is provided in association with each identified application.

FOR FURTHER INFORMATION CONTACT: J. Suzanne Hedgepeth, Director, Office of Hazardous Materials, Exemptions and

Approvals, Research and Special Programs Administration, U.S. Department of Transportation, 400 Seventh Street, SW, Washington, DC 20590–0001, (202) 366–4535.

Key to "Reasons for Delay"

1. Awaiting additional information from applicant
2. Extensive public comment under review
3. Application is technically very complex and is of significant impact or precedent-setting and requires extensive analysis
4. Staff review delayed by other priority issues or volume of exemption applications

Meaning of Application Number Suffixes

N—New application

M—Modification request

PM—Party to application with modification request

Issued in Washington, DC, on February 18, 1999.

J. Suzanne Hedgepeth

Director, Office of Hazardous Materials Exemptions and Approvals.

Application No.	Applicant	Reason for delay	Estimated date of completion
New Exemption Applications			
11699–N	GEO Specialty Chemicals, Bastrop, LA	4	03/31/1999
11761–N	Vulcan Chemicals, Birmingham, AL	4	03/31/1999
11767–N	Ausimont USA, Inc., Thorofare, NJ	4	03/31/1999
11815–N	Union Pacific Railroad Co. et al, Omaha, NE	4	03/31/1999
11817–N	FIBA Technologies, Inc., Westboro, MA	1, 4	03/31/1999
11862–N	The BOC Group, Murray Hill, NJ	4	03/31/1999
11883–N	Brownie Tank Mfg., Co., Minneapolis, MN	4	03/31/1999
11894–N	Quicksilver Fiberglass Manufacturing Ltd., Strome, Alberta, CN	4	03/31/1999
11927–N	Alaska Marine Lines, Inc., Seattle, WA	4	03/31/1999
11934–N	UtiliCorp United, Inc., Omaha, NE	4	03/31/1999
11954–N	Republic Environmental Systems (PA), Inc., Hatfield, PA	4	02/26/1999
11983–N	Degussa Corporation, Ridgefield Park, NJ	4	03/31/1999
12001–N	Albemarle Corporation, Baton Rouge, LA	4	03/31/1999
12003–N	Degussa Corporation, Ridgefield Park, NJ	4	03/31/1999
12020–N	Rhone-Poulenc, Inc., Shelton, CT	4	03/31/1999
12029–N	NACO Technologies, Lombard, IL	4	03/31/1999
12032–N	Physical Acoustics Quality Services, Lawrenceville, NJ	4	03/31/1999
12033–N	PPG Industries, Inc., Pittsburgh, PA	4	03/31/1999
12051–N	General American Transportation Corporation, Chicago, IL	4	03/31/1999
12063–N	The Hydrocarbon Flow Specialist, Inc., Morgan City, LA	4	03/31/1999
12064–N	Occident Chemical Corp., Webster, TX	4	03/31/1999
12071–N	Pennwalt India Limited, Worli, Mumbai, IN	4	03/31/1999
12072–N	Consani Engineering (PTY) Limited, Cape Province, RA	4	03/31/1999
12098–N	Carleton Technologies, Inc., Orchard Park, NY	4	03/31/1999
12104–N	Hoechst Celanese, Spartanburg, SC	4	03/31/1999
12105–N	Becton Dickinson Microbiology Systems, Sparks, MD	4	03/31/1999
12106–N	Air Liquide America Corporation, Houston, TX	4	03/31/1999
12116–N	Proserv (North Sea) Ltd., Aberdeen, UK	4	04/30/1999
12123–N	Eastman Chemical Co., Kingsport, TN	4	04/30/1999
12125–N	Mayo Foundation, Rochester, MN	4	04/30/1999
12126–N	LaRoche Industries Inc., Atlanta, GA	4	03/31/1999
12129–N	Kenyon International Emergency Services, Houston, TX	4	04/30/1999
12130–N	FIBA Technologies, Inc., Westboro, MA	4	04/30/1999
12131–N	Gamma Laboratories, Ltd., Houston, TX	1	04/30/1999
12134–N	Institute of Shortening and Edible Oils (ISEO), Washington, DC	4	04/30/1999
12136–N	Net Grocer, North Brunswick, NJ	4	04/30/1999
12144–N	Sea-Land Service, Inc. Charlotte, NC	4	04/30/1999
12145–N	Dorbyl Heavy Engineering, Duncanville Vereeniging, SA	1	04/30/1999
12148–N	Eastman Kodak Company, Rochester, NY	4	04/30/1999
12205–N	Independent Chemical Corp., Glendale, NY	4	04/30/1999
12208–N	Air Products & Chemicals, Inc., Allentown, PA	4	04/30/1999
Modifications to Exemptions			
4354–M	PPG Industries, Inc., Pittsburgh, PA	1	03/31/1999
7887–M	Kosdon Enterprises, Ventura, CA	4	03/31/1999
8602–M	MVE, Inc., New Prague, MN	4	04/30/1999
8915–M	Advanced Silicon Materials, Inc., Moses Lake, WA	4	03/31/1999
9266–M	ERMEWA, Inc., Houston, TX	4	03/31/1999
9419–M	FIBA Technologies, Inc., Westboro, MA	4	03/31/1999
9421–M	Taylor-Wharton Co., Harrisburgh, PA	4	03/31/1999
9706–M	Taylor-Wharton Co., Harrisburg, PA	4	03/31/1999
10047–M	Taylor-Wharton Co., Harrisburg, PA	4	03/31/1999
10458–M	Marsulex, Inc., Subdury, Ontario, CN	4	03/31/1999
10996–M	Kosdon Enterprises, Ventura, CA	4	03/31/1999
11050–M	Koppers Industries, Inc., Pittsburg, PA	4	03/31/1999
11173–M	Olin Corporation, Norwalk, CT	4	03/31/1999
11270–M	The Speciality Chemicals Div. of B.F. Goodrich Co., Cleveland, OH	4	03/31/1999

Application No.	Applicant	Reason for delay	Estimated date of completion
11483–M	Autoliv, Autoflator AB, Vargarda, SW	4	03/31/1999
11984–M	United Parcel Service Company, Louisville, KY	4	03/31/1999

[FR Doc. 99–5591 Filed 3–5–99; 8:45 am]

BILLING CODE 4910–60–M

DEPARTMENT OF TRANSPORTATION

Surface Transportation Board

[Finance Docket No. 33556]

Canadian National Railway Company, Grand Trunk Corporation, and Grand Trunk Western Railroad Incorporated—Control—Illinois Central Corporation, Illinois Central Railroad Company, Chicago, Central and Pacific Railroad Company, and Cedar River Railroad Company

AGENCY: Surface Transportation Board.

ACTION: Notice of availability of Final Environmental Assessment.

SUMMARY: The Surface Transportation Board's (Board) Section of Environmental Analysis (SEA) issued a Final Environmental Assessment (Final EA) for the proposed acquisition of control of Illinois Central Corporation (IC) and its railroad affiliates by Canadian National Railway Company (CN). The Final EA addresses written public comments made since issuance of the Draft Environmental Assessment (Draft EA) on November 9, 1998 and the errata to the Draft EA on November 24, 1998, and includes SEA's final recommendations for mitigating the potential environmental impacts of the proposed CN/IC acquisition. In addition, the Final EA responds to public comments regarding the Safety Integration Plan prepared by CN and IC, in consultation with the Federal Railroad Administration, that explains how they propose to safely integrate their separate operations if the Board approves the proposed acquisition. SEA believes that with the recommended environmental mitigation, there will be no potential for significant environmental impact. SEA assessed the potential environmental impacts the proposed CN/IC acquisition could have on safety, transportation systems, land use, energy, air quality, noise, biological resources, water resources, historic and cultural resources, and environmental justice, and addressed the potential impacts in the Draft and Final EA. SEA determined that there would be potentially significant impacts on only one issue area, hazardous materials transport safety. Accordingly, in the Final EA, SEA is recommending mitigation to address the potential acquisition-related increases in hazardous materials transport, including potential disproportionately high and adverse impacts these increases could have on minority and low-income populations. With these final mitigation recommendations, SEA believes there will be no potential for significant environmental effects on hazardous materials transport safety or environmental justice populations. SEA determined that none of the other environmental issue areas would have a potential for significant environmental effects and therefore do not warrant mitigation. However, because safety integration is an ongoing process, the Safety Integration Plan is an evolving document that will continue to be modified and refined until the proposed acquisition is safely implemented.

SEA fully considered all comments received in response to the Draft EA, consulted further with Federal, state, and local agencies, and conducted additional environmental analysis where appropriate in preparing the Final EA and in making its final environmental mitigation recommendations to the Board. In making its final decision, the Board will consider the entire environmental record, including all public comments, the Draft EA, the Final EA, and SEA's final recommended environmental mitigation.

DATES: The Board plans to conduct oral argument on March 18, 1999 and a formal voting conference on March 25, 1999. The Board plans to serve its final written decision on May 25, 1999. Any party may file an administrative appeal within 20 days of the Board's final written decision.

FOR FURTHER INFORMATION: To request a copy of the Final EA or for further information on the proposed CN/IC acquisition, interested parties may call SEA's toll-free Environmental Hotline at 1–888–869–1997 (TDD for the hearing impaired: (202) 565–1695), or access SEA's website for the CN/IC acquisition at www.cnicacquisition.com. For additional information regarding environmental issues, or the environmental review process, contact SEA's Project Manager for the proposed CN/IC acquisition, Michael Dalton, at (202) 565–1530.

SUPPLEMENTARY INFORMATION: On July 15, 1998, CN and IC, collectively referred to as CN/IC or applicants, filed a joint application [1] with the Board seeking authority for CN to acquire control of IC. The proposed CN/IC system would extend to both the east and west coasts of North America and the Gulf of Mexico. The Chicago area would serve as the hub of the combined system. This new system would cover approximately 18,670 miles of rail lines and related facilities, of which approximately 4,520 miles would be in the United States. The applicants state that integrating CN and IC operations would allow both rail systems to provide more reliable, efficient, and competitive service. The applicants also state that they anticipate relatively minor changes in rail operations as a result of the proposed acquisition. The applicants have proposed no rail line abandonments and only five minor construction projects (one rail line connection and four rail yard bypass tracks) as part of the proposed acquisition.

By the Board, Elaine K. Kaiser, Chief of the Section of Environmental Analysis.

Vernon A. Williams,

Secretary.

[FR Doc. 99–5625 Filed 3–5–99; 8:45 am]

BILLING CODE 4915–00–P

DEPARTMENT OF TRANSPORTATION

Surface Transportation Board

[STB Finance Docket No. 33713]

Idaho Northern & Pacific Railroad Company—Lease Exemption—Union Pacific Railroad Company

Idaho Northern & Pacific Railroad Company (IN&P), a Class III rail carrier, has filed a notice of exemption under 49 CFR 1150.41 to lease from Union Pacific Railroad Company (UP) approximately 35.99 miles of rail line located: (i)

[1] *Canadian National Railway Company, Grand Trunk Corporation, and Grand Trunk Western Railroad Incorporated—Control—Illinois Central Corporation, Illinois Central Railroad Company, Chicago, Central and Pacific Railroad Company, and Cedar River Railroad Company,* STB Finance Docket No. 33556.

Between milepost 0.2, near Caldwell, ID, and milepost 11.39, at Wilder, ID; (ii) between milepost 443.0, near Hillcrest, ID, and milepost 467.8, near Nampa, ID; and (iii) track numbers 40, 401, 402, 403, 404, 406, 407, 408, 409, 410, 411, 412, 413, 414 and 415 in UP's Nampa Yard, in Nampa.[1] IN&P will be the operator of the property.

In conjunction with the lease of these rail lines, IN&P will acquire approximately 0.2 miles of incidental trackage rights over UP's rail line located between milepost 465.91, at Caldwell, and milepost 0.2, near Caldwell.

The transaction is expected to be consummated on March 1, 1999.

If the notice contains false or misleading information, the exemption is void *ab initio.* Petitions to revoke the exemption under 49 U.S.C. 10502(d) may be filed at any time. The filing of a petition to revoke does not automatically stay the transaction.

An original and 10 copies of all pleadings, referring to STB Finance Docket No. 33713, must be filed with the Surface Transportation Board, Office of the Secretary, Case Control Unit, 1925 K Street, N.W., Washington, DC 20423–0001. In addition, a copy of each pleading must be served on Karl Morell, Esq., BALL JANIK LLP, 1455 F Street, N.W., Suite 225, Washington, DC 20005.

Board decisions and notices are available on our website at ''WWW.STB.DOT.GOV.''

Decided: March 1, 1999.

By the Board, David M. Konschnik, Director, Office of Proceedings.

Vernon A. Williams,

Secretary.

[FR Doc. 99–5485 Filed 3–5–99; 8:45 am]

BILLING CODE 4915–00–P

DEPARTMENT OF TRANSPORTATION

Surface Transportation Board

[STB Docket No. AB–55 (Sub-No. 569X)]

CSX Transportation, Inc.—Abandonment Exemption—in Guernsey and Noble Counties, OH

On February 16, 1999, CSX Transportation, Inc. (CSXT), filed with the Surface Transportation Board (Board) a petition under 49 U.S.C. 10502 for exemption from the provisions of 49 U.S.C. 10903 to abandon a portion of its line of railroad known as its Louisville Service Lane, Central Ohio Subdivision, extending from milepost BPB–4.9 near Byesville to milepost BPB–18.23 at the end of the track near Cumberland, a distance of 13.3 miles, in Guernsey and Noble Counties, OH. The line traverses U.S. Postal Service Zip Codes 43723, 43724, and 43732, and includes the station of Cumberland at or near milepost BPB–18.23.

The line does not contain federally granted rights-of-way. Any documentation in the railroad's possession will be made available promptly to those requesting it.

The interest of railroad employees will be protected by *Oregon Short Line R. Co.—Abandonment—Goshen,* 360 I.C.C. 91 (1979).

By issuance of this notice, the Board is instituting an exemption proceeding pursuant to 49 U.S.C. 10502(b). A final decision will be issued by June 4, 1999.

Any offer of financial assistance (OFA) under 49 CFR 1152.27(b)(2) will be due no later than 10 days after service of a decision granting the petition for exemption. Each OFA must be accompanied by the filing fee, which currently is set at $1,000. *See* 49 CFR 1002.2(f)(25).

All interested persons should be aware that, following abandonment of rail service and salvage of the line, the line may be suitable for other public use, including interim trail use. Any request for a public use condition under 49 CFR 1152.28 or for trail use/rail banking under 49 CFR 1152.29 will be due no later than March 29, 1999. Each trail use request must be accompanied by a $150 filing fee. *See* 49 CFR 1002.2(f)(27).

All filings in response to this notice must refer to STB Docket No. AB–55 (Sub-No. 569X) and must be sent to: (1) Surface Transportation Board, Office of the Secretary, Case Control Unit, 1925 K Street, N.W., Washington, DC 20423–0001; and (2) Charles M. Rosenberger, 500 Water Street—J150, Jacksonville, FL 32202. Replies to the CSXT petition are due on or before March 29, 1999.

Persons seeking further information concerning abandonment procedures may contact the Board's Office of Public Services at (202) 565–1592 or refer to the full abandonment or discontinuance regulations at 49 CFR part 1152. Questions concerning environmental issues may be directed to the Board's Section of Environmental Analysis (SEA) at (202) 565–1545. [TDD for the hearing impaired is available at (202) 565–1695.]

An environmental assessment (EA) (or environmental impact statement (EIS), if necessary) prepared by SEA will be served upon all parties of record and upon any agencies or other persons who commented during its preparation. Other interested persons may contact SEA to obtain a copy of the EA (or EIS). EAs in these abandonment proceedings normally will be made available within 60 days of the filing of the petition. The deadline for submission of comments on the EA will generally be within 30 days of its service.

Board decisions and notices are available on our website at ''WWW.STB.DOT.GOV.''

Decided: February 24, 1999.

By the Board, David M. Konschnik, Director, Office of Proceedings.

Vernon A. Williams,

Secretary.

[FR Doc. 99–5249 Filed 5–5–99; 8:45 am]

BILLING CODE 4915–00–P

DEPARTMENT OF TRANSPORTATION

Surface Transportation Board

[STB Docket No. AB–549]

City of Rochelle, IL—Adverse Discontinuance—Rochelle Railroad Company

On February 16, 1999, the City of Rochelle, IL (City), filed an adverse application under 49 U.S.C. 10903 requesting that the Surface Transportation Board (Board) authorize the discontinuance by the Rochelle Railroad Company (RRC) of service over 2.06 miles of track that the City owns in an industrial park. The line was not further described in the application, but a map included with the filing indicates that the line begins at a switch near the intersection of Caron Road and Creston Road and ends in a stub east of Gredco Drive. The line has no stations and traverses United States Postal Service ZIP Code 61068.

In early 1998, the City terminated a contract with RRC to operate the line, but RRC continued to operate over the line. The City has also been operating the line under a Notice of Exemption in *City of Rochelle, Illinois—Notice of Exemption—Commencement of Rail Common Carrier Operations,* STB Finance Docket No. 33587 (STB served and published (63 FR 30036) June 2, 1998).

In a decision served in this proceeding on June 5, 1998, the City was granted a waiver of filing requirements in 49 CFR 1152 and was given permission to file an adverse discontinuance application containing the following information: (1) The name and address of the applicant; (2) the name and address of counsel; (3) a detailed map of the facilities involved; (4) the total carloads broken out for each of the shippers currently using the line

[1] The length of the rail line does not include the tracks in Nampa Yard.

(asserted to be three); (5) a summary of the principal commodities handled, if available; (6) a summary operating plan for operations of the substitute carrier; (7) certification that the City's current, or proposed, operations comply, or will comply, with all federal and state safety requirements; (8) an opinion of counsel that the prior lease with RRC was terminated in accordance with its terms; (9) documentation from the City that authorizes the operations of the substituted service; (10) a statement from the City Manager of the reasons for the application and the benefits that will be obtained if the application is approved; and (11) supporting statements from shippers. The City was also granted a waiver of all notice and publication requirements but was required to serve a copy of its application on the shippers on the line, RRC, connecting ''trunk carriers'' and the Illinois Commerce Commission (Commission).

The City states that, under a Mediation Agreement dated November 12, 1998, RRC ceased serving the line on November 13, 1998, and agreed not to oppose the City's adverse discontinuance application. The City suggests that an adverse discontinuance proceeding is unnecessary because RRC has ceased operations and will not oppose the application and the City is currently providing service. As an alternative to consideration of the discontinuance application, the City requests that the adverse discontinuance proceeding be dismissed. The City asserts that, if the application is dismissed, RRC will be deemed to be relieved of its common carrier obligation.

In light of the settlement and the need for a formal end to RRC's common carrier obligation, the application for adverse discontinuance will not be dismissed. No other pleading is before the Board that would provide an opportunity for the Board to authorize discontinuance of RRC's operations. Thus, while the situation here is unusual, the Board can proceed to resolve the remaining issues in the context of an adverse discontinuance proceeding.

The City further states that, if the Board accepts the discontinuance application, much of the information it was required to submit by the June 5, 1998 decision is now unnecessary because the adverse discontinuance application will likely be unopposed. Moreover, the City states that, because it is the only operator of the line, information about total carloads, a summary of the principal commodities, a summary operating plan, the benefits to be received from the application, the documentation from the City authorizing the service and supporting statements from shippers is no longer relevant. As a result, the City requests that the Board waive submission of that information. The City says that it has provided the remainder of the information called for in the June 5, 1998 decision and has served copies of its application on shippers, RRC, connecting carriers and the Commission.

A ruling on the City's waiver request will be deferred. While RRC has agreed not to oppose the adverse application, there are other interested parties who have participated in previous proceedings involving the City and RRC who may want to participate in this proceeding. The information sought to be waived might at some point be needed to address issues raised by other parties. The City will therefore be expected to supplement the record if necessary. On the other hand, if the application is unopposed, the decision on the merits of the application will be based on the existing record.

There is no indication that the line contains any federally granted right-of-way. Any documentation in the City's possession will be made available promptly to those requesting it. The applicant's entire case for discontinuance of service was filed with the application.

The interest of affected railroad employees will be protected by the conditions set forth in *Oregon Short Line R. Co.—Abandonment—Goshen*, 360 I.C.C. 91 (1979).

Any interested person may file written comments concerning the proposed discontinuance or protests (including the protestant's entire opposition case), by April 2, 1999. Because this is a discontinuance proceeding, and not an abandonment, trail use/rail banking, and public use requests are not appropriate. Also, offers of financial assistance will not be entertained in this proceeding. Any offer here would be limited to subsidization of RRC's services. Given the settlement agreement, RRC's cessation of operations, and the City's provision of continued rail service, the public interest does not require the consideration of offers of financial assistance.

Persons opposing the proposed adverse discontinuance who wish to participate actively and fully in the process should file a protest by April 2, 1999. Persons who may oppose the discontinuance but who do not wish to participate fully in the process by submitting verified statements of witnesses containing detailed evidence should file comments by April 2, 1999. Parties seeking information concerning the filing of protests should refer to section 1152.25. The due date for applicant's reply is April 17, 1999.

All filings in response to this notice must refer to STB Docket No. AB–549 and must be sent to (1) Surface Transportation Board, Office of the Secretary, Case Control Unit, 1925 K Street, N.W., Washington, DC 20423–0001 and (2) John M. Robinson, 9616 Old Spring Road, Kensington, MD 20895. The original and 10 copies of all comments or protests shall be filed with the Board with a certificate of service. Except as otherwise set forth in part 1152, every document filed with the Board must be served on all parties to the discontinuance proceeding. 49 CFR 1104.12(a).

Persons seeking further information concerning abandonment and discontinuance procedures may contact the Board or refer to the full abandonment regulations at 49 CFR part 1152.

The June 5 decision waived compliance with environmental regulations because the City is a substitute operator of the line. Accordingly, no environmental assessment will be prepared in this proceeding.

Decided: March 2, 1999.

By the Board, David M. Konschnik, Director, Office of Proceedings.

Vernon A Williams,

Secretary.

[FR Doc. 99–5582 Filed 3–5–99; 8:45 am]

BILLING CODE 4915–00–P

DEPARTMENT OF THE TREASURY

Office of the Secretary

List of Countries Requiring Cooperation With an International Boycott

In order to comply with the mandate of section 999(a)(3) of the Internal Revenue Code of 1986, the Department of the Treasury is publishing a current list of countries which may require participation in, or cooperation with, an international boycott (within the meaning of section 999(b)(3) of the Internal Revenue Code of 1986).

On the basis of the best information currently available to the Department of the Treasury, the following countries may require participation in, or cooperation with, an international boycott (within the meaning of section 999(b)(3) of the Internal Revenue code of 1986):

Bahrain
Iraq
Kuwait
Lebanon
Libya
Oman
Qatar
Saudi Arabia
Syria
United Arab Emirates
Yemen, Republic of

Dated; March 2, 1999.

Philip West,

International Tax Counsel (Tax Policy).

[FR Doc. 99–5590 Filed 3–5–99; 8:45 am]

BILLING CODE 4810–25–M

DEPARTMENT OF THE TREASURY

Internal Revenue Service

Proposed Collection; Comment Request for Form 1041–A

AGENCY: Internal Revenue Service (IRS), Treasury.

ACTION: Notice and request for comments.

SUMMARY: The Department of the Treasury, as part of its continuing effort to reduce paperwork and respondent burden, invites the general public and other Federal agencies to take this opportunity to comment on proposed and/or continuing information collections, as required by the Paperwork Reduction Act of 1995, Public Law 104–13 (44 U.S.C. 3506(c)(2)(A)). Currently, the IRS is soliciting comments concerning Form 1041–A, U.S. Information Return—Trust Accumulation of Charitable Amounts.

DATES: Written comments should be received on or before May 7, 1999 to be assured of consideration.

ADDRESSES: Direct all written comments to Garrick R. Shear, Internal Revenue Service, room 5571, 1111 Constitution Avenue NW., Washington, DC 20224.

FOR FURTHER INFORMATION CONTACT: Requests for additional information or copies of the form(s) and instructions should be directed to Carol Savage, (202) 622–3945, Internal Revenue Service, room 5569, 1111 Constitution Avenue NW., Washington, DC 20224.

SUPPLEMENTARY INFORMATION:

Title: U.S. Information Return—Trust Accumulation of Charitable Amounts.

OMB Number: 1545–0094.

Form Number: Form 1041–A.

Abstract: Form 1041–A is used to report the information required in Internal Revenue Code section 6034 concerning accumulation and distribution of charitable amounts. The data is used to verify that amounts for which a charitable deduction was allowed are used for charitable purposes.

Current Actions: There are no changes being made to the form at this time.

Type of Review: Extension of a currently approved collection.

Affected Public: Businesses or other for-profit organizations, and individuals.

Estimated Number of Respondents: 18,000.

Estimated Time Per Respondent: 37 hours, 33 minutes.

Estimated Total Annual Burden Hours: 675,900.

The following paragraph applies to all of the collections of information covered by this notice:

An agency may not conduct or sponsor, and a person is not required to respond to, a collection of information unless the collection of information displays a valid OMB control number. Books or records relating to a collection of information must be retained as long as their contents may become material in the administration of any internal revenue law. Generally, tax returns and tax return information are confidential, as required by 26 U.S.C. 6103.

REQUEST FOR COMMENTS: Comments submitted in response to this notice will be summarized and/or included in the request for OMB approval. All comments will become a matter of public record. Comments are invited on: (a) whether the collection of information is necessary for the proper performance of the functions of the agency, including whether the information shall have practical utility; (b) the accuracy of the agency's estimate of the burden of the collection of information; (c) ways to enhance the quality, utility, and clarity of the information to be collected; (d) ways to minimize the burden of the collection of information on respondents, including through the use of automated collection techniques or other forms of information technology; and (e) estimates of capital or start-up costs and costs of operation, maintenance, and purchase of services to provide information.

Approved: February 25, 1999.

Garrick R. Shear,

IRS Reports Clearance Officer.

[FR Doc. 99–5674 Filed 3–5–99; 8:45 am]

BILLING CODE 4830–01–U

DEPARTMENT OF THE TREASURY

Internal Revenue Service

Art Advisory Panel—Notice of closed meeting

AGENCY: Internal Revenue Service, Treasury.

ACTION: Notice of Closed Meeting of Art Advisory Panel.

SUMMARY: Closed meeting of the Art Advisory Panel will be held in Washington, D.C.

DATE: The meeting will be held April 14 and 15, 1999.

ADDRESSES: The closed meeting of the Art Advisory Panel will be held on April 14 and 15, 1999 in Room 4600E beginning at 9:30 a.m., Franklin Court Building, 1099 14th Street, NW., Washington, D.C. 20005.

FOR FURTHER INFORMATION CONTACT: Karen Carolan, C:AP:AS 1099 14th Street, NW., Washington, D.C. 20005. Telephone (202) 694–1861, (not a toll free number).

SUPPLEMENTARY INFORMATION: Notice is hereby given pursuant to section 10(a)(2) of the Federal Advisory Committee Act, 5 U.S.C. App. (1988), that a closed meeting of the Art Advisory Panel will be held on April 14 and 15, 1999 in Room 4600E beginning at 9:30 a.m., Franklin Court Building, 1099 14th Street, NW., Washington, D.C. 20005.

The agenda will consist of the review and evaluation of the acceptability of fair market value appraisals of works of art involved in Federal income, estate, or gift tax returns. This will involve the discussion of material in individual tax returns made confidential by the provisions of section 6103 of Title 26 of the United States Code.

A determination as required by section 10(d) of the Federal Advisory Committee Act has been made that this meeting is concerned with matters listed in section 552b(c)(3), (4), (6), and (7) of Title 5 of the United States Code, and that the meeting will not be open to the public.

The Commissioner of Internal Revenue has determined that this document is not a significant regulatory action as defined in Executive Order 12866 and that a regulatory impact analysis therefore is not required. Neither does this document constitute a rule subject to the Regulatory Flexibility Act (5 U.S.C. Chapter 6).

Charles O. Rossotti,

Commissioner of Internal Revenue.

[FR Doc. 99–5672 Filed 3–5–99; 8:45 am]

BILLING CODE 4830–01–U

DEPARTMENT OF THE TREASURY

Internal Revenue Service

Art Advisory Panel of the Commissioner of Internal Revenue; Availability of Report of 1998 Closed Meetings

AGENCY: Internal Revenue Service.

ACTION: Notice of availability of report on closed meetings of the Art Advisory Panel.

SUMMARY: The report is now available.

Pursuant to 5 U.S.C. app. I section 10(d), of the Federal Advisory Committee Act; and 5 U.S.C. 552b, the Government in the Sunshine Act: A report summarizing the closed meeting activities of the Art Advisory Panel during 1998, has been prepared. A copy of this report has been filed with the Assistant Secretary of the Treasury for Management and is now available for public inspection at: Internal Revenue Service, Freedom of Information Reading Room, Room 1621, 1111 Constitution Avenue, NW., Washington, D.C. 20224.

Requests for copies should be addressed to: Director, Disclosure Operations Division, Attn: FOI Reading Room, Box 388, Benjamin Franklin Station, Washington, D.C. 20224, Telephone (202) 622–5164. (Not a toll free telephone number.)

The Commissioner of Internal Revenue has determined that this document is not a major rule as defined in Executive Order 12291 and that a regulatory impact analysis therefore is not required. Neither does this document constitute a rule subject to the Regulatory Flexibility Act (5 U.S.C. Chapter 6).

For further information contact: Karen Carolan, C:AP:AS, Internal Revenue Service/ Appeals, 1099 14th Street, NW., Washington, D.C. 20005, Telephone (202) 694–1861. (Not a toll free telephone number.)

Charles O. Rossotti,

Commissioner of Internal Revenue.

[FR Doc. 99–5673 Filed 3–5–99; 8:45 am]

BILLING CODE 4830–01–U

UNITED STATES INFORMATION AGENCY

Culturally Significant Objects Imported for Exhibition Determinations: ''The Topkapi Palace: Jewels and Treasures of the Sultans''

AGENCY: United States Information Agency.

ACTION: Notice.

SUMMARY: Notice is hereby given of the following determinations: Pursuant to the authority vested in me by the Act of October 19, 1965 (79 Stat. 985, 22 U.S.C. 2459), Executive Order 12047 of March 27, 1978 (43 FR 13359, March 29, 1978), and Delegation Order No. 85–5 of June 27, 1985 (50 FR 27393, July 2, 1985). I hereby determine that the objects to be included in the exhibit ''The Topkapi Palace: Jewels and Treasures of the Sultans,'' imported from abroad for temporary exhibition without profit within the United States, are of cultural significance. These objects are imported pursuant to a loan agreement with the foreign lenders. I also determine that the exhibitions or display of the listed exhibit objects at the Corcoran Gallery of Art, Washington, DC, from on or about March 1, 2000, to on or about June 15, 2000, the San Diego Museum of Art, San Diego, CA, from on or about July 14, 2000 to on or about September 24, 2000, and the Fort Lauderdale Museum of Art, Fort Lauderdale, FL, from on or about October 15, 2000 to on or about January 14, 2001 is in the national interest. Public Notice of these determinations is ordered to be published in the **Federal Register**.

FOR FURTHER INFORMATION CONTACT:

For a copy of the list of exhibit objects or for further information, contact Carol Epstein, Assistant General Counsel, Office of the General Counsel, United States Information Agency, at 201/619–6981, or USIA, 301 4th Street, S.W., Room 700, Washington, D.C. 20547–0001.

Dated: March 2, 1999.

Les Jin,

General Counsel.

[FR Doc. 99–5538 Filed 3–5–99; 8:45 am]

BILLING CODE 8230–01–M

federal register

Monday
March 8, 1999

Part II

Securities and Exchange Commission

17 CFR Part 230, et al.

Revision of Rule 504 of Regulation D, the ''Seed Capital'' Exemption; Rule 701—Exempt Offerings Pursuant to Compensatory Arrangements; Registration of Securities on Form S–8; Final Rules

Registration of Securities on Form S–8; Publication or Submission of Quotations Without Specified Information; Proposed Rules

SECURITIES AND EXCHANGE COMMISSION

17 CFR Part 230

[Release No. 33–7644; S7–14–98]

RIN 3235–AH35

Revision of Rule 504 of Regulation D, the ''Seed Capital'' Exemption

AGENCY: Securities and Exchange Commission.

ACTION: Final rule.

SUMMARY: The Securities and Exchange Commission (''we'' or ''Commission'') is adopting amendments to Rule 504 of Regulation D, which provides an exemption from Securities Act registration for securities offerings of non-reporting companies that do not exceed an aggregate annual amount of $1 million. Recent fraudulent secondary transactions in the over-the-counter markets of ''microcap'' companies have involved freely tradable securities issued in Rule 504 offerings. To curb these abuses, we are modifying Rule 504 to limit the circumstances where general solicitation is permitted and ''freely tradable'' securities may be issued in reliance on the rule to transactions registered under state law requiring public filing and delivery of a disclosure document to investors before sale, or exempted under state law permitting general solicitation and advertising so long as sales are made only to accredited investors. Since most transactions under Rule 504 are private ones, they will continue to be permissible under the exemption, but general solicitation and advertising will not be permitted and the securities will be ''restricted.''

EFFECTIVE DATE: April 7, 1999.

FOR FURTHER INFORMATION CONTACT: Richard K. Wulff or Barbara C. Jacobs (202–942–2950), Office of Small Business, Division of Corporation Finance, Securities and Exchange Commission, 450 Fifth Street, NW, Washington, DC 20549.

SUPPLEMENTARY INFORMATION:

I. Executive Summary and Background

Congress has passed significant legislation to aid small businesses in raising capital in the private and public securities markets over the years. The Small Business Investment Incentive Act of 1980, for example, was designed to reduce the regulatory restraints on small business capital formation.[1] In response to that Act, in 1982, we adopted Regulation D[2] under the Securities Act of 1933 (''Securities Act'').[3] Regulation D is an exemption from Securities Act registration that was designed to:

- Simplify existing rules and regulations;
- Eliminate any unnecessary restrictions that those rules and regulations placed on issuers, particularly small businesses; and
- Achieve uniformity between state and federal exemptions in order to facilitate capital formation consistent with the protection of investors.[4]

Regulation D provides exemptions from Securities Act registration for securities offerings under three separate rules: Rules 504, 505 and 506.[5] Rule 504 is the limited offering exemption designed to aid small businesses raising ''seed capital.'' Currently, Rule 504 permits a non-reporting issuer[6] to offer and sell securities to an unlimited number of persons without regard to their sophistication or experience and without delivery of any specified information in a public offering.[7] General solicitation and general advertising are permitted for all Rule 504 offerings. The aggregate offering price of this exemption is limited to $1 million in any 12-month period; and certain other offerings must be aggregated with the Rule 504 offering in determining the available sales amount.[8] Securities sold under this exemption may be resold freely by non-affiliates of the issuer[9] who are not otherwise acting as an underwriter.[10]

While Regulation D offerings are exempt from federal securities registration requirements, currently these offerings must be registered in each state in which they are offered unless a state exemption is available.[11] The vast majority of states require registration of public Rule 504 offerings.[12] In adopting Rule 504, we placed substantial reliance upon state securities laws because the size and local nature of these small offerings did not appear to warrant imposing extensive federal regulation. These offerings continue, however, to be subject to federal antifraud and other civil liability provisions.

Unfortunately, there have been recent disturbing developments in the secondary markets[13] for some securities

[1] Pub. L. No. 96–477, 944 Stat. 2275. That Act amended the Securities Act by adding Section 4(6) [15 U.S.C. 77(d)(6)], which among other matters, exempts from registration offers or sales of securities in the aggregate amount of $5 million or less if solely made to ''accredited investors''.

[2] 17 CFR 230.501 *et seq. See* Release No. 33–6389 (March 8, 1982) [47 FR 11251].

[3] 15 U.S.C. 77a *et seq.*

[4] *See* Release No. 33–6389 at Section II.A.

[5] Rules 504 and 505 are dedicated to the needs of small issuers; they are based on our authority under Section 3(b) of the Securities Act [15 U.S.C. 77(b)], which permits us to create exemptions where the aggregate amount of the offering does not exceed $5 million. In 1996, Section 28 was added to the Securities Act [15 U.S.C. 78bb], which gives us broad general exemptive authority without dollar limit. In a companion release, we are adopting amendments to Rule 701 of the Securities Act [17 CFR 230.701] pursuant to this new authority. *See* Release No. 33–7645.

Rule 505 is designed to help small businesses because it permits sales to a small number of nonaccredited, unsophisticated investors. Rule 506 is our non-exclusive safe harbor rule adopted under the ''non-public'' offering exemption of Section 4(2) of the Securities Act [15 U.S.C. 77d(2)]. It permits sales only to accredited investors and a limited number of sophisticated investors.

[6] A non-reporting issuer is an issuer that is not required to file reports with the Commission under Section 13 or 15(d) of the Securities Exchange Act of 1934 [15 U.S.C. 78a *et seq.*] (''Exchange Act''). We recently approved a proposed rule amendment to Rule 6530 of the National Association of Securities Dealers, Inc. (''NASD'') to limit quotations on the OTC Bulletin Board (''OTCBB'') to the securities of issuers that make current filings under Section 13 or 15(d) or other applicable regulatory authority, among other matters. *See* Release No. 34–40878 (January 4, 1999) [64 FR 1255]. As such, once an OTCBB issuer becomes subject to our reporting requirements, it would be ineligible to use Rule 504.

In our recent Securities Act Reform proposals, we solicited comment on whether a reporting company should be able to rely on Rule 504 for the issuance of securities underlying convertible securities and warrants that it had previously offered in compliance with Rule 504 when it was not a reporting company. *See* Release No. 33–7606 (November 3, 1998) [63 FR 67174].

[7] Other issuers that are ineligible to use Rule 504 include investment companies or development stage companies that either have no specific business plan or purpose or have indicated that the business plan is to engage in a merger or acquisition with an unidentified company or companies, or other entity or person. *See* Rule 504(a) of Regulation D.

As with all Regulation D offerings, we require a Form D, a simple six-page notice, to be filed with us no later than 15 days after the first sale in the Rule 504 offering. *See* Rule 503 of Regulation D [17 CFR 230.503]. Filing a Form D is not, however a condition to the exemption.

[8] Rule 504 offerings are aggregated for this purpose with all other offerings exempt under Section 3(b) (*e.g.*, Rule 504 or Rule 505 offerings) and all offerings made in violation of Section 5(a) of the Securities Act [15 U.S.C. 77e(a)].

[9] *See* interpretive letter to Mr. E.H. Hawkins (June 26, 1997), setting forth the views of the Division of Corporation Finance that affiliates who receive securities in a Rule 504 offering are subject to resale limitations.

[10] *See* fn. 17 and 18, below.

[11] *See, e.g.*, the Uniform Limited Offering Exemption (''ULOE'') developed by the North American Securities Administrators Association, Inc. (''NASAA''), which was designed to be a coordinating state exemption with Rule 505 of Regulation D, and optionally Rule 506. Rule 504 is not a part of ULOE.

NASAA is an association of securities commissioners from each of the 50 states, the District of Columbia, Puerto Rico, Mexico and several provinces of Canada.

[12] New York and the District of Columbia do not require registration of Rule 504 offerings.

[13] These secondary markets include the OTCBB operated by the NASD or the pink sheets published by the National Quotation Bureau, Inc.

initially issued under Rule 504,[14] and to a lesser degree, in the initial Rule 504 issuances themselves.[15] These offerings generally involved the securities of ''microcap'' companies, *i.e.*, those characterized by thin capitalization, low share prices, limited public information and little or no analyst coverage. Recent market innovations and technological changes, most notably, the Internet, have created the possibility of nation-wide Rule 504 offerings for securities of non-reporting companies that were once thought to be sold locally.

In some cases, Rule 504 has been used in fraudulent schemes to make prearranged ''sales'' of securities under the rule to nominees in states that do not have registration or prospectus delivery requirements. As a part of this arrangement, these securities are then placed with broker-dealers who use cold-calling techniques to sell the securities at ever-increasing prices to unknowing investors. When their inventory of shares is exhausted, these firms permit the artificial market demand created to collapse, and investors lose much, if not all, of their investment. This scheme is sometimes colloquially referred to as ''pump and dump.''

Regulation D is only available for offers and sales by an issuer of securities to initial purchasers; it is not available to any affiliate of the issuer or to any person for resales of the securities.[16] Thus, where a purchaser of Rule 504 securities wishes to sell these securities, he or she must either register the transaction or have an exemption for the transaction. Those who purchase such securities with a view to their distribution are acting as ''underwriters'' [17] and thus their sales of the securities are not exempt from registration.[18] In these circumstances, these persons could be charged with violating Section 5 of the Securities Act.[19] In addition, they could be charged with violating the antifraud provisions of the Securities Act and the Exchange Act for any material misrepresentations made in the Rule 504 offering.[20]

On May 21, 1998, we proposed amendments to Rule 504 to eliminate the freely tradable nature of the securities issued under the exemption.[21] If we adopted that proposal, these securities could be resold only:

- After the one-year holding period of Rule 144[22];
- Through registration; or
- Through another exemption (such as Regulation A[23]), if available.

By making all securities issued in a Rule 504 transaction restricted, we thought that unscrupulous persons would be less likely to use the rule as the source of freely tradable securities they need to facilitate their fraudulent transactions.

In the Rule 504 Proposing Release, we also solicited comment on an alternative to revise Rule 504 so it would be substantially similar to its pre-1992 format, permitting public offerings only where the issuer complies with state registration processes that require the preparation and delivery of a disclosure document to investors before sale of the securities. We also solicited comment on the appropriate treatment for offerings made under certain state exemptions, such as the one recently developed for sales to accredited investors.[24]

For the reasons discussed below, we are again conditioning the availability of Rule 504 for public offerings on the extent of state regulation over those offerings by making the exemption substantially similar to its pre-1992 format.[25] We believe that this alternative is an effective way to combat the abuses we have described and at the same time preserve the ability of legitimate small businesses to raise capital. This approach is more narrowly targeted to the abuses we have observed than simply restricting all securities issued in a Rule 504 transaction. As amended, the rule establishes the general principle that securities issued under the exemption, just like the other Regulation D exemptions, will be restricted, and prohibits general solicitation and general advertising, unless the specified conditions

[14] *See, e.g., SEC* v. *Szur, et al.*, Lit. No. 15595, S.D.N.Y., December 18, 1997; *SEC* v. *Badger, et al.* Lit. No. 15595, S.D.N.Y., December 18, 1997; *SEC* v. *Scudiero, et al.*, Lit. No. 15595, S.D.N.Y., December 18, 1997; *SEC* v. *Ruge, et al.*, Lit. No. 15595, S.D.N.Y., December 18, 1997; and *SEC* v. *Pignatiello, et al.*, Lit. No. 15595, S.D.N.Y., December 18, 1997. In these cases, we filed five civil injunctive actions charging fifty-eight defendants with manipulation of the over-the-counter markets for ''microcap'' securities. The five actions were the result of an undercover investigation into illegal practices in these markets conducted by the United States Attorney's Office for the Southern District of New York and the Federal Bureau of Investigation, with assistance from the NASD and us.

See also Schroeder, ''Penny Stock Fraud is Again on a Resurgence, Bolstered by Loopholes and New Technology, Wall St. J., September 4, 1997 at 12.

[15] *See, e.g., SEC* v. *Millennium Software Solutions, Inc. and Mark Shkolir*, Lit. No. 15603, S.D.N.Y., December 23, 1997 and *SEC* v. *Spacedev, Inc. and James W. Benson*, Securities Act Rel. No. 7561, August 6, 1998.

[16] *See* Preliminary Note 4 to Regulation D.

[17] The term ''underwriter'' is defined in Section 2(a)(11) of the Securities Act [15 U.S.C. 77(b)(11)] to include ''any person who has purchased from an issuer with a view to, or offers or sells for an issuer in connection with, the distribution of any security, or participates or has a direct or indirect participation in any such undertaking, or participates or has a participation in the direct or indirect underwriting of any such undertaking. * * *

[18] In particular, the ''resale'' exemption of Section 4(1) of the Securities Act [15 U.S.C. 77d(1)] is unavailable since the exemption is available to ''any person other than an issuer, underwriter or dealer.'' In this case, the purchasers are acting as underwriters, as explained above. The dealer exemption of Section 4(3) of the Securities Act [15 U.S.C. 77d(3)] also is unavailable where the person relying upon the exemption acts as an ''underwriter.''

See also Note 6 to Regulation D, which provides that Regulation D is not available to any issuer for any transaction or chain of transactions that, although in technical compliance with the rules, is part of a plan or scheme to evade the registration provisions of the Securities Act. In such cases, registration is required.

[19] 15 U.S.C. 77e.

[20] Section 17 of the Securities Act [15 U.S.C. 77q(a)], Section 10(b) of the Exchange Act [15 U.S.C. 78j(b)] and Rule 10b–5 thereunder [17 CFR 240.10b–5].

[21] Release No. 33–7541 (May 21, 1998) [63 FR 29168] (''Rule 504 Proposing Release''). The Commission received 33 letters of comment. The comment letters are available for inspection and copying in the Commission's Public Reference Room in File No. S7–14–98. Comments that were submitted electronically are available on the Commission's website (www.sec.gov).

[22] 17 CFR 230.144.

[23] 17 CFR 230.251 *et seq.*

[24] State exemptions of this nature include those based upon the ''Model Accredited Investor Exemption,'' which was adopted by NASAA in 1997. CCH NASAA Reporter Para.361. Generally, the rule exempts offers and sales of securities from state registration requirements, if among other matters, the securities are sold only to persons who are, or are reasonably believed to be, ''accredited investors'' as defined in Rule 501(a) of Regulation D [17 CFR 230.501(a)]. The model restricts transfer of the securities for 12 months after issuance except to other accredited investors or if registered. Written solicitations under that provision are generally limited to a type of ''tombstone'' ad.

As of December 31, 1998, 29 states and the Commonwealth of Puerto Rico have an accredited investor exemption permitting some form of general solicitation and two states had adopted specific accredited investor exemptions to work with the U.S. Small Business Administration's Angel Capital Electronic Network (ACE-Net). Of these, 15 states have adopted NASAA's Model Accredited Investor Exemption through statute, regulation or executive order. The remaining 14 states either have accredited investor exemptions pre-dating the Model Exemption or have adopted variations of the Model Exemption. Of the 19 states that do not have an accredited investor exemption permitting general solicitation, seven have statutory or regulatory language pending to adopt such an exemption.

ACE-Net is an Internet-based, securities listing service where small, growing companies can list their stock offerings to accredited investors. It is a public/private partnership between the SBA and 38 non-profit, university-and state-based entities around the country. *See* Angel Capital Electronic Network (pub. avail. October 25, 1996).

[25] Unlike the rule as amended today, the pre-1992 format of Rule 504 did not include a provision for state law exemptions for sales made to accredited investors or any requirement for publicly filing the disclosure document that is delivered to investors although this has long been a standard feature of state registration provisions. It also required issuers in private Rule 504 offerings to advise purchasers of the resale limitations on the securities a reasonable period of time before sale.

permitting a public offering are met. These conditions are:

- The transactions are registered under a state law requiring public filing and delivery of a disclosure document before sale. For sales to occur in a state without this sort of provision, the transactions must be registered in another state with such a provision and the disclosure document filed in that state must be delivered to all purchasers before sale in both states; or
- The securities are issued under a state law exemption that permits general solicitation and general advertising so long as sales are made only to ''accredited investors'' as that term is defined in Regulation D.[26]

Investor protection concerns require that this action be taken to curb misuse of this exemption in the markets for ''microcap'' companies. Requiring issuers to go through state registration and deliver disclosure documents to investors in order to issue freely tradable securities in Rule 504 transactions provides information for prospective investors to make more informed investment decisions. These amendments are part of our comprehensive agenda to deter registration and trading abuses, particularly by ''microcap'' issuers. We have developed a four-pronged approach to deter ''microcap'' fraud: enforcement, investor education, compliance examinations, and regulation.[27]

We believe the amendments to Rule 504 adopted today will deter the abuses we have seen, while not impeding legitimate ''seed capital'' offerings. We will monitor the use of the rule, as revised, and also contact the state regulatory authorities regarding their experience with these offerings. If it appears that Rule 504 is still being misused, we will consider adding stronger measures, such as requiring an after-market information delivery requirement[28] or disqualification provisions.[29] With respect to the accredited investor aspect of the revised rule, we will work with the states to assess its use. If the new regulatory scheme is being misused, particularly in states that do not impose transfer restrictions on the resale of the securities by accredited investors, we will explore with these states the viability of imposing such restrictions under their provisions. Failing that, we would consider making the securities ''restricted'' as defined in Rule 144.

II. Amendments to Rule 504

Before 1992, Rule 504 exempted both public and private offerings. It exempted public offerings if sales did not exceed $1 million[30] in a 12-month period and if the offering was registered with one or more states that required the preparation and delivery of a disclosure document to investors before sale.[31] Private offerings, in which general solicitation and general advertising were prohibited, were exempt if sales did not exceed $500,000. State registration was not a condition to the exemption in the private context.

In July 1992, we adopted revisions to our rules and forms to facilitate capital raising by small businesses by reducing the compliance burdens placed on those companies by the federal securities laws.[32] The amendments eliminated all restrictions on the manner of offering and on resales under Rule 504. As a result, a non-reporting company could offer up to $1 million of securities in a 12-month period and be subject only to the antifraud provisions of the federal securities laws. General solicitation and general advertising were permitted for all Rule 504 offerings. Further, securities sold under Rule 504 were not ''restricted'' securities and thus were available for immediate resale by non-affiliates of the issuer, as long as they were not otherwise ''underwriters''[33] of the offering.[34]

In the Rule 504 Proposing Release, we proposed that all securities issued in a Rule 504 transaction would be ''restricted'' from resale for a one-year period after issuance. This proposal directly addressed the abuses we witnessed in the secondary markets. Almost all commenters objected to this approach, since it would require issuers to offer a significant liquidity discount in all Rule 504 issuances, even fully state registered ones, causing a significant reduction in the amounts of capital they could raise. While acknowledging that this approach would have some impact upon the targeted problem in the secondary market, commenters, including NASAA, believed that our alternative approach, which was to reinstitute the rule largely as it had been in effect for a number of years before 1992, would be equally, if not more, effective since if an issuer goes through state registration and must deliver a disclosure document to prospective investors, sufficient information ought to be available in the markets to permit investors to make more informed investment decisions and thus deter manipulation of Rule 504 securities. They also noted that this approach would not unduly penalize small businesses, since they would have some avenue open to them to issue freely transferable securities.

The amendments we adopt today implement the alternative narrower reform. By returning the Rule 504 exemption largely to its pre-1992 framework, we intend to deter ''microcap'' fraud. We believe that the vast majority of current Rule 504 offerings are private. Private offerings under Rule 504 will be permitted for up to $1 million in a 12-month period, under the same terms and conditions, except for the specific disclosure requirements,[35] as offerings under Rules 505 and 506. Securities in these offerings will be restricted, and these offerings may no longer involve general solicitation and advertising.

On the other hand, the rule as revised leaves avenues open for issuers to make less limited offerings under Rule 504. By focusing on state registration, review and disclosure requirements, we are still

[26] *See* Rule 501(a) of Regulation D.

[27] We are issuing four companion releases today. *See* Release No. 33–7646, which adopts revisions to Form S–8, the short-form registration statement for issuing securities to employees, consultants and advisors as compensation, in order to curb abusive situations and Release No. 33–7647, which contains additional proposals to Form S–8 to further reduce abuse of the form. *See* Release No. 34–41110, which reproposes amendments to Exchange Act Rule 15c2–11 [17 CFR 240.15c2–11] to require the first broker-dealer that publishes any quotation for a covered security to review information about the issuer and thereafter other broker-dealers to review information about the issuer when they first publish or resume publishing a priced quotation for a covered security. *See also* Release No. 33–7645, which adopts amendments to Form 701, the exemption for non-reporting companies to issue securities to employees, consultants and advisors.

[28] *See* Section 4(3) of the Securities Act [15 U.S.C. 77d(3)], Securities Act Rule 174 [17 CFR 230.174] and Rule 251(d)(2)(ii) of Regulation A [17 CFR 230.251(d)(2)(ii)].

[29] *See* Rule 505(b)(2)(iii) of Regulation D [17 CFR 230.505(b)(2)(iii)] or Rule 262 of Regulation A [17 CFR 230.262].

[30] As originally adopted in 1982, the exemption was subject to a $500,000 limitation. In 1988, the ceiling for public offerings was increased to $1 million. *See* Release No. 33–6758 (March 3, 1988) [53 FR 7866].

[31] For example, Form U–7 (also referred to as ULOR, uniform limited offering registration, or SCOR, small corporate offering registration) was developed by NASAA to be a special registration format for companies registering securities under state securities laws when relying upon the federal Rule 504 exemption. *See* Harris, Keller, Stakias & Liles, Financing the ''American Dream.''

[32] *See* Release No. 33–6949 (July 30, 1992) [57 FR 36442]. On April 28, l993, we adopted additional revisions to further facilitate financings by small business issuers. *See* Release No. 33–6996 (April 28, 1993) [58 FR 26509].

[33] Section 2(a)(11) of the Securities Act [15 U.S.C. 77b(a)(11)].

[34] Regulation D exemptions are available only to the issuer of the securities. None of these exemptions can be used by any other person. *See* Preliminary Note 4 to Regulation D.

[35] Rule 502(b)(1) of Regulation D [17 CFR 230.501(b)(1)].

permitting legitimate small issuers to access the capital markets without having to sell restricted securities. In adopting this reform, we note that the state registration and review system is generally comprehensive. As of the effective date of these amendments, an issuer will only be able to issue unrestricted or freely tradable securities in a Rule 504 offering and engage in general solicitation or general advertising in two circumstances:

- If it registers the offering under a state law that requires the public filing [36] and delivery of a disclosure document to investors before sale; [37] or
- If the transaction is effected under a state law exemption that permits general solicitation and general advertising so long as sales are made only to ''accredited investors.'' [38]

These amendments will be effective April 7, 1999. Rule 504 offerings that begin on or after this date will have to comply with the new rule. With respect to Rule 504 offerings that are ongoing at the time of the amendments, issuers will have to discontinue offers and register under a state law requiring the preparation and delivery of a disclosure document to investors before sale in order to issue freely tradable securities.

The pre-1992 approach strikes an appropriate balance between the needs of legitimate small businesses to issue freely tradable securities to obtain seed capital, while still protecting investors.[39] The amendments will preserve an avenue for small businesses to issue freely tradable securities and not suffer deep liquidity discounts, while at the same time they will protect investors by curbing the use of Rule 504 securities in connection with fraudulent transactions.

III. Cost-Benefit Analysis

In the Rule 504 Proposing Release we asked the public for their views on the costs and benefits of the proposal and other supporting information. No commenter provided data on the plan we adopt today.

We believe that those who will rely on the rule will not have significantly increased costs. In fact, since the rule is essentially being maintained as it has always operated, given the necessity of state law compliance, the vast majority of issuers should have no additional costs of compliance. The main impact will be that issuers who make offerings in states that do not provide for the registration provision dictated by the rule will have to register in another state in order to have a public offering and issue that state's residents freely tradable securities. We understand that issuers who intend to issue securities in New York and the District of Columbia are the only ones that will be affected by this change. We understand that the average cost of preparing and filing a Form U–7 filing is $30,000.[40] It is because of the mandate of investor protection that we are making this change. Overall, the rule will maintain the benefits that allow small companies to raise ''seed capital'' with a minimal federal compliance scheme for public offerings. Private offerings also are being affected since they will no longer be able to use general solicitation or advertising and securities issued in these offerings will be restricted. The Commission has concluded that the amendments will not result in significant adverse effects on efficiency, competition, or capital formation.

IV. Summary of the Final Regulatory Flexibility Analysis

In accordance with 5 U.S.C. § 604, we have prepared a final Regulatory Flexibility Analysis (''FRFA'') regarding the amendments.

The analysis notes that the amendments to Rule 504 are a result of our view that the current configuration of the exemption may be leading to abuse, as well as concerns expressed to us by representatives of other regulators. The purpose of the revisions is to reduce the potential for abuse and yet maintain the utility of the exemption for small businesses. We have determined that the amendments will enhance the protection of the investing public.

As the FRFA describes, in calendar year 1998, 2,988 Forms D were filed by 2,499 companies with the Commission claiming the Rule 504 exemption. Rule 504 only affects non-reporting companies. The Commission has sought to minimize the reporting burden on small businesses. However, we do not collect data to determine how many of the non-reporting companies filing Form D are small businesses. The amendments will only affect issuers offering and selling in certain jurisdictions. We do not know the number of Rule 504 offerings in these jurisdictions. Therefore, we are unable to determine exactly how many small businesses will be affected by the proposed amendments.

While it is not possible to know with certainty, it is believed that most of these offerings were done by small businesses. Small businesses affected by the changed rule include those that make a ''public'' offering of securities in one of the jurisdictions that does not require prospectus delivery before sale. The rule changes would require the securities to be registered in a state that requires prospectus delivery before sale or that exempts general solicitations of accredited investors. In the alternative, these companies could use the rule to make a private offering, which could involve their offering a liquidity discount for their shares and thus increase their cost for capital. The Commission has insufficient data to

[36] The disclosure document must be publicly available at the state level. This document must provide substantive disclosure to investors, including the business and financial condition of the issuer (including financial statements), the risks of the offering, a description of the securities, and the plan of distribution. For example, the issuer could provide the information required in a Form U–7, as outlined in n.37, to satisfy this requirement.

[37] If any state that the issuer intends to make sales in does not provide for the registration or the public filing or delivery of a disclosure document to investors before sale, then in order to be able to issue freely tradable securities and to engage in public solicitation or public advertising, the issuer must register in at least one state with such a procedure. The disclosure document must be delivered before sale to *all* purchasers, including purchasers in the states that have no registration and delivery procedure. The process does not allow using one state's prospectus in another state where the second state provides a conforming procedure.

In states that have adopted the Small Corporate Offering Registration (''SCOR'') Review Statement of Policy, information on an issuer is available to investors through Form U–7. The Form U–7 contains a series of 50 very detailed questions on the issuer's business, intended use of proceeds, management, principal stockholders, and plan of distribution. In addition, the issuer must file historical financial statements prepared in accordance with generally accepted accounting principles in the United States. Form U–7 has been either formally adopted or recognized and accepted by 45 states.

[38] Generally, these securities may not be freely transferred under state law. The Model Accredited Investor Exemption provides that any resale of a security sold in reliance of the exemption within 12 months of sale will be presumed to be with a view to distribution and not for investment, a requirement of the exemption, except for limited circumstances. With respect to general solicitation and advertising, the Model Accredited Investor Exemption specifies that only a tombstone ad may be used; however, a few states have no restriction on general solicitation and advertising so long as sales are only made to accredited investors.

[39] We have an ongoing dialogue with small business and their representatives. Since September 1996, we have hosted 12 SEC Small Business Town Hall Meetings across the country to discuss issues like our capital formation rules. We learn about the current concerns and problems of small businesses in raising capital in the securities markets so that we can implement programs to meet their needs consistent with the protection of investors. Three meetings have been held since the proposals were issued. At each meeting, we discussed the Rule 504 Proposing Release and encouraged attendees to submit their views as part of the rulemaking process.

In addition, every year we host the Government-Business Forum on Small Business Capital Formation. In September 1998, we held the Seventeenth Annual Forum in Chicago. The Rule 504 Proposing Release generated significant discussion there as well.

[40] This estimate is from a 1997 survey conducted by the *SCOR Report*, a newsletter that covers all aspects of small business finance.

reliably quantify the impact on small entities offering such a discount.

The amendments do not impose any new recordkeeping requirements or require reporting of additional information. The amendments require issuers in certain jurisdictions to register in states they might not otherwise register. We understand that the average cost of a Form U–7 filing is $30,000.[41]

As discussed more fully in the FRFA, several possible significant alternatives to the proposals were considered. These included establishing different compliance or reporting requirements for small entities, exempting them from all or part of the proposed requirements, or requiring them to provide more disclosure, such as the same disclosure as required for the other Regulation D exemptions. We also considered restricting the resale of these securities. We concluded that the costs of this proprosal exceeded the benefit. The FRFA also indicates that there are no current federal rules that duplicate, overlap, or conflict with the proposed rule amendments.

We encouraged written comments on any aspect of the initial regulatory flexibility analysis (IRFA), but received no specific comments in response to our request. In particular, we sought comment on: (1) the number of small entities that would be affected by the proposed rule amendments; and (2) the determination that the proposed rule amendments would not increase the reporting, recordkeeping and other compliance requirements for small entities. A copy of the FRFA may be obtained from Twanna M. Young, Office of Small Business, Division of Corporation Finance, Securities and Exchange Commission, 450 Fifth Street, NW, Washington, DC 20549.

V. Paperwork Reduction Act

We submitted the initial proposal for review in accordance with the Paperwork Reduction Act of 1995 (''the Act'').[42] The title to the affected information collection is: ''Form D.'' The specific information that must be included in Form D is explained in the form itself, and relates to the issuer, its principals and the amount of money proposed to be raised along with proposed applications of the proceeds. The information is needed for monitoring use of the exemption as well as evaluating its usefulness. The effect of the rule amendment is to require some issuers to prepare registration and disclosure documents they currently are not required to file.

The collection of information in Form D will continue to be required in order for companies to use the rule for sales of their securities. While we cannot estimate the number of respondents that may use revised Rule 504, in calendar year 1998, there were 2,988 Forms D filed by 2,499 companies with the Commission claiming the Rule 504 exemption. We believe that the vast majority of these were private Rule 504 offerings. We expect that approximately 2,250 companies each year will be relying on the exemption. With the revisions to Rule 504 the estimated burden for responding to the collection of information in Form D would not increase for most companies because the information required has not been changed. The number of eligible transactions, however, may decrease. We do not know how many issuers currently offer or sell securities pursuant to Rule 504 in states without a requirement to deliver a disclosure document to investors before sale. We estimate that the burden hours per respondent each year will be unchanged at 16. Therefore, we estimate an aggregate of 36,000 burden hours per year.

The information collection requirements imposed by Form D are mandatory to the extent that a company elects to use the Rule 504 exemption. The information will be disclosed to third parties or the public. An agency may not conduct or sponsor, and a person is not required to respond to, a collection of information unless it displays a currently valid control number. The OMB control number is 3235–0076.

We received no comments in response to our solicitation of comments regarding the information collection obligation.

VI. Statutory Basic, Text of Amendments and Authority

The amendments are made pursuant to Sections 2, 3(b), 6, 7, 8, 10, 19(a), 19(c) and 28 of the Securities Act.

List of Subjects in 17 CFR Part 230

Reporting and recordkeeping requirements, Securities.

For the reasons set out in the preamble, title 17, chapter II of the Code of Federal Regulations is amended as follows:

PART 230—GENERAL RULES AND REGULATIONS, SECURITIES ACT OF 1933

1. The authority citation for part 230 continues to read in part as follows:

Authority: 15 U.S.C. 77b, 77f, 77g, 77h, 77j, 77r, 77s, 77sss, 78c, 78d, 78*l*, 78m, 78n, 78o, 78w, 78*ll*(d), 79t, 80a–8, 80a–24, 80a–28, 80a–29, 80a–30, and 80a–37, unless otherwise noted.

* * * * *

2. By revising § 230.504(b)(1) to read as follows:

§ 230.504 Exemption for limited offerings and sales of securities not exceeding $1,000,000.

* * * * *

(b) *Conditions to be met.* (1) *General conditions.* To qualify for exemption under this § 230.504, offers and sales must satisfy the terms and conditions of §§ 230.501 and 230.502 (a), (c) and (d), except that the provisions of § 230.502 (c) and (d) will not apply to offers and sales of securities under this § 230.504 that are made:

(i) Exclusively in one or more states that provide for the registration of the securities, and require the public filing and delivery to investors of a substantive disclosure document before sale, and are made in accordance with those state provisions;

(ii) In one or more states that have no provision for the registration of the securities or the public filing or delivery of a disclosure document before sale, if the securities have been registered in at least one state that provides for such registration, public filing and delivery before sale, offers and sales are made in that state in accordance with such provisions, and the disclosure document is delivered before sale to all purchasers (including those in the states that have no such procedure); or

(iii) Exclusively according to state law exemptions from registration that permit general solicitation and general advertising so long as sales are made only to ''accredited investors'' as defined in § 230.501(a).

* * * * *

Dated: February 25, 1999.

By the Commission.

Margaret H. McFarland,

Deputy Secretary.

[FR Doc. 99–5295 Filed 3–5–99; 8:45 am]

BILLING CODE 8010–01–U

[41] *See* fn. 40, above.

[42] 44 U.S.C. 3501 *et seq.*

SECURITIES AND EXCHANGE COMMISSION

17 CFR Part 230

[Release No. 33–7645; File No. S7–5–98]

RIN 3235–AH21

Rule 701—Exempt Offerings Pursuant to Compensatory Arrangements

AGENCY: Securities and Exchange Commission.

ACTION: Final rule.

SUMMARY: The Securities and Exchange Commission (''we'' or ''Commission'') is adopting amendments to Rule 701 under the Securities Act of 1933, which provides an exemption from registration for securities issued by non-reporting companies pursuant to compensatory arrangements. These amendments make Rule 701 more useful and eliminate unnecessary restrictions. We are removing the $5 million aggregate offering price ceiling and setting the maximum amount of securities that may be sold in a 12-month period to a more appropriate, flexible limit related to the size of the issuer. The amendments also require specific disclosure from issuers that sell more than $5 million worth of securities in a 12-month period, and harmonize the definition of consultant and advisor to the one contained in Form S–8, the short-form registration statement form for the offer and sale of employee benefit plan securities.

EFFECTIVE DATE: April 7, 1999.

FOR FURTHER INFORMATION CONTACT: Richard K. Wulff (202–942–2950), Office of Small Business, Division of Corporation Finance, Securities and Exchange Commission, 450 Fifth Street, NW, Washington, DC 20549.

SUPPLEMENTARY INFORMATION: We are adopting amendments to Rule 701 [1] under the Securities Act of 1933 (''Securities Act'').[2]

I. Executive Summary and Background

In 1988, we adopted Rule 701 under the Securities Act [3] to allow private companies to sell securities to their employees without the need to file a registration statement, as public companies do. The rule provides an exemption from the registration requirements of the Securities Act for offers and sales of securities under certain compensatory benefit plans or written agreements relating to compensation. The exemptive scope covers securities offered or sold under a plan or agreement between a non-reporting (''private'') company (or its parents or majority-owned subsidiaries) and the company's employees, officers, directors, partners, trustees, consultants and advisors.

When we adopted the rule, we determined that it would be an unreasonable burden to require these private companies, many of which are small businesses, to incur the expenses and disclosure obligations of public companies when their only public securities sales were to employees. Further, these sales are for compensatory and incentive purposes, rather than for capital-raising. To accommodate these companies, we used the maximum extent of the authority we had at that time under Section 3(b) of the Securities Act [4] to exempt offers and sales of up to $5 million per year.

Currently, the amount of securities subject to outstanding offers in reliance on Rule 701, plus the amount of securities offered or sold under the rule in the preceding 12 months, may not exceed the greatest of $500,000, or an amount determined under one of two different formulas. One formula limits the amount to 15% of the issuer's total assets measured at the end of the issuer's last fiscal year. The other formula restricts the amount to no more than 15% of the outstanding securities of the class being offered. Regardless of the formula elected, Rule 701 restricts the aggregate offering price of securities subject to outstanding offers and the amount sold in the preceding 12 months to no more than $5 million.

Over the years, our staff has monitored the use of the rule. The staff concluded that the rule has been popular for both small businesses and larger private companies. However, the $5 million limit appears to have become unnecessarily restrictive in light of inflation, the increased popularity of equity ownership as a retention and incentive device for employees, and the growth of deferred compensation plans.

In October 1996, Congress enacted the National Securities Markets Improvement Act of 1996 (''NSMIA''),[5] which, for the first time, gave us the authority to provide exemptive relief in excess of $5 million for transactions such as these. The legislative history of NSMIA stated specifically that we should use this new authority to lift the $5 million ceiling on Rule 701.[6] In February 1998, we proposed a number of revisions to increase the flexibility and usefulness of Rule 701, as well as to simplify and clarify the rule.[7]

Today, we announce revisions to the rule that:

(1) remove the $5 million aggregate offering price ceiling and, instead, set the maximum amount of securities that may be sold in a year at the greatest of:

—$1 million (rather than the current $500,000);
—15% of the issuer's total assets; or
—15% of the outstanding securities of that class;

(2) require the issuer to provide specific disclosure to each purchaser of securities if more than $5 million worth of securities are to be sold;

(3) do not count offers for purposes of calculating the available exempted amounts; [8]

(4) harmonize the definition of consultants and advisors permitted to use the exemption to the narrower definition of Form S–8; [9]

(5) amend Rule 701 to codify current and more flexible interpretations; and

(6) simplify the rule by recasting it in plain English.

Together, these changes will add greater flexibility for companies to compensate sell securities their employees with securities and, at the same time, will provide that essential information be delivered to employees in appropriate situations and in a timely manner. The vast majority of commenters on the Rule 701 Proposing Release supported the proposed amendments, particularly the lifting of the $5 million aggregate offering price ceiling and the removing of offers from the ceiling calculation. A number of commenters, however, expressed concerns about the proposed disclosure requirements, particularly as they relate to foreign private issuers.

We have considered these comments and we believe that we have struck an

[1] 17 CFR 230.701.

[2] 15 U.S.C. 77a *et seq.*

[3] Release No. 33–6768 (April 14, 1988) [53 FR 12918].

[4] 15 U.S.C. 77c(b).

[5] Pub. L. 104–290, 110 Stat. 3416 (October 11, 1996).

[6] Both Committee Reports specifically highlighted the current $5 million limit contained in Rule 701 and sought prompt Commission action to raise that ceiling to ''not less than $10 million.'' H.R. Rep. No. 104–622 at 38; S. Rep. No. 104–293 at 16.

[7] Release No. 33–7511 (February 27, 1998) [63 FR 10785] (''Rule 701 Proposing Release''). We received 33 letters of comment on the proposals. You may inspect and copy the comment letters in our Public Reference Room in File No. S7–5–98. Comments that were submitted electronically are available on our website (http://www.sec.gov).

[8] Note, however, that the rule now requires issuers to count as sales the securities underlying the options at the time of the option grant based upon the exercise price.

[9] 17 CFR 239.16b. Form S–8, a simplified form for registering sales to employees, is available only to public companies subject to the reporting requirements of the Securities Exchange Act of 1934 [15 U.S.C. 78a *et seq.*] (''Exchange Act''). See also the release relating to revisions to Form S–8 we are adopting today, Release No. 33–7646. (''S–8 Adopting Release'').

appropriate balance between the needs of employee-investors and the needs of non-reporting companies. In particular, we have decided to impose the disclosure requirements only on sales above $5 million, instead of on all Rule 701 sales, as proposed. These revisions to Rule 701 are being adopted pursuant to the exemptive authority provided to the Commission under Section 28 of the Securities Act.[10]

II. Amendments to Rule 701

The amendments to Rule 701 have been adopted in most respects as proposed, with the exceptions discussed below. The changes to the rule are not retroactive. Offers and sales made in reliance on Rule 701 before the effective date will continue to be valid if they met the conditions of the rule before its revision.[11] The principal changes are in the areas of exemptive limits, disclosure, and the treatment of consultants and advisors, as discussed in detail below. In addition, we are adopting a number of clarifying and simplifying provisions, including the following:

- Expanding the scope of the rule to exempt sales to employees of majority-owned subsidiaries of the issuer's parent (*i.e.*, brother-sister subsidiaries);
- Providing: (1) that a private, wholly-owned subsidiary can use its parent's assets, whether or not the parent is a public company, in making the 15% of assets calculation so long as the parent fully and unconditionally guarantees the obligations of the subsidiary issued under the rule (if the guarantee does not exceed 15% of the parent's assets), such as in the case of many deferred compensation arrangements; and (2) an exemption for the parent's guarantee;
- Clarifying that sales to former employees may be completed under the rule if those persons were employees when the securities initially were offered;[12]
- Specifying the manner of considering employee/consultant services in calculating the aggregate sales limit; and
- Facilitating tax and estate planning by permitting the rule to be available for option exercises by family members of employees who acquire Rule 701 securities from the employee through a gift or a domestic relations order.[13]

A. Exemptive Limits

As proposed, we are removing the $5 million aggregate offering price ceiling and raising the current $500,000 level that can be sold in a year to $1 million.[14] Also as proposed, the revised rule no longer limits the dollar amount of securities *offered* to employees. Instead, issuers will make calculations based solely on actual sales or amounts to be sold (as with options) in a 12-month period. Changing the focus from offers to sales will make it easier for issuers to determine the exempt amount of securities transactions, while continuing to assure that the transactions are not so large as to trigger the need for registration. We believe that these changes, in combination with the other changes adopted, will provide issuers the flexibility they need, without creating opportunities for abuse.

With respect to equity incentives such as restricted stock and compensatory stock purchases, the calculations will be made as of the transaction date. Deferred compensation and similar plans will make measurements based upon the date of an irrevocable election to defer compensation. With respect to options, calculations will be made as of the date of the option's grant, without regard to whether the option is currently exercisable or ''vested.'' We make this change for option calculations in response to comments emphasizing the difficulty in keeping track of outstanding options, when they become exercisable and when they might be exercised.[15] We believe that this method of determining the available exemption should make no difference from an investor protection point of view since the 12-month limit will still apply. However, this change will greatly simplify the issuer's oversight of outstanding offers and perhaps benefit more employees and others who may participate in the compensatory arrangements. The rule makes it clear that calculations with respect to options should be based on the exercise price, since the purpose is to measure the securities that will be sold under the exemption.[16]

Rule 701 provides that the calculation of the exempt amount should account for the value of both consultant and employee services.[17] A number of the commenters misunderstood this provision. The point of the revision is to clarify that compensatory arrangements should not be valued at ''zero'' or treated as a gift. Even when the employee or consultant is not required to pay additional consideration for the securities being issued, these securities typically would have some intrinsic worth, such as book value or a multiple of book value. The value of services exchanged for securities issued must be measured by reference to the value of the securities issued rather than the employee's salary or consultant's invoice. The rule as revised makes this clear.

B. Disclosure to Persons Covered by Rule 701

We were concerned that eliminating the $5 million ceiling could result in some very large offerings of securities without the protections of registration, even though made pursuant to compensatory arrangements. We therefore proposed to impose a specific disclosure requirement on all transactions under the exemption. We solicited comment on whether some dollar amount of transactions might not require specified disclosure, for example, $1 million. In response to comment, and our consideration of reasonable alternatives, we have decided to require no specified disclosure requirement for sales up to $5 million. This formulation apparently has worked well to date. We do not

[10] ''The Commission, by rule or regulation, may conditionally or unconditionally exempt any person, security or transaction, or any class or classes of persons, securities or transactions from any provision of this title or any rule or regulation issued under this title to the extent that such exemption is necessary or appropriate in the public interest, and is consistent with protection of investors.'' 15 U.S.C. 77bb. As more fully described below, we find that the exemption is appropriate in the public interest and is consistent with the protection of investors.

[11] Offers that were being made under the Rule 701 exemption as it used to read may be consummated under those terms. For example, vested options may be exercised in reliance upon the prior version of Rule 701. Options issued in reliance upon the Rule 701 exemption (in contrast to a ''no sale'' theory) may be exercised in reliance upon the prior version of the rule, whether vested or unvested. See the interpretive letter to Richard M. Leisner (December 21, 1995).

[12] As adopted, the rule also includes former directors, officers, general partners, trustees, consultants and advisors.

[13] This change is consistent with the amendments to Form S–8 adopted today with respect to transferable securities. ''Family member'' is defined in Rule 701(c)(3) the same way as ''family member'' in General Instruction A.1(a)(5) of Form S–8 as adopted today in the S–8 Adopting Release.

[14] The revised rule also makes it clear, as proposed, that the calculations of total assets and securities outstanding are measured as of the issuer's most recent balance sheet date, which must be no older than the end of its last fiscal year.

[15] In particular, commenters were concerned that basing calculations on the option exercise date could result in an unanticipated loss of the exemption if too many optionees exercised their options at the same time. Although options are offers of the underlying securities that can be made without limitation and are exempt under the revised rule, using the exercise price at the date of grant simplifies the calculations of the available exemption amount and allows issuers to avoid the administrative difficulties of keeping track of outstanding options.

[16] In the event that exercise prices are later changed or repriced, a recalculation will have to be made under Rule 701.

[17] Rule 701(d)(3)(i).

believe the exemption has been misused for fraudulent purposes in its current format. We agree with the commenters that the additional burdens related to mandatory financial and risk disclosure for these limited offerings are unnecessary.

On the other hand, the revised rule provides no aggregate offering price ceiling and thus substantial amounts of securities exceeding $5 million may be issued by large private companies. Indeed, a number of commenters with this profile urged the Commission to remove the ceiling quickly so that they can enjoy sooner the benefits of the exemption for their compensatory arrangements. These commenters appear to be comfortable with a greater disclosure requirement as the tradeoff for greater use of the exemptive rule. Moreover, we believe that many of these companies already have prepared the type of disclosure required in their normal course of business, either for using other exemptions, such as Regulation D [18] or for other purposes. As a result, the disclosure requirement generally would be less burdensome for them. If these companies do not want to disclose the requisite information to their employees and others, they may continue to follow the current provisions of the rule and keep the amount sold below $5 million in a 12-month period. In that case, they would continue to provide only the disclosure needed to satisfy the antifraud provisions of the law.[19]

We would have investor protection concerns if we removed the $5 million ceiling without imposing specific disclosure requirements, as discussed below. In contrast, we believe that disclosure requirements are not needed for offerings below the $5 million threshold at this time. We have not witnessed abuse below this threshold, and therefore the burden of preparing and disseminating the new disclosure does not justify the potential benefits to employee-investors.

Where the formula permits sales in excess of $5 million during a 12-month period, and the issuer chooses to take advantage of this increased amount, the new disclosure should be provided to all investors before sale. This requirement will obligate issuers to provide disclosure to all investors if the issuer believes that sales will exceed the $5 million threshold in the coming 12-month period. If disclosure has not been provided to all investors before sale, the issuer will lose the exemption for the entire offering when sales exceed the $5 million threshold.

The disclosure requirements are adopted as proposed. The required disclosure consists of:

- A copy of the compensatory benefit plan or contract;[20]
- A copy of the summary plan description required by the Employee Retirement Income Security Act of 1974 (''ERISA'') [21] or, if the plan is not subject to ERISA, a summary of the plan's material terms;
- Risk factors associated with investment in the securities under the plan or agreement; and
- The financial statements required in an offering statement on Form 1–A [22] under Regulation A.[23]

The type and amount of disclosure needed in a compensatory securities transaction differs from that needed in a capital-raising transaction. In a bona fide compensatory arrangement, the issuer is concerned primarily with compensating the employee-investor rather than maximizing its proceeds from the sale. Because the compensated individual has some business relationship, perhaps extending over a long period of time, with the securities issuer, that person will have acquired some, and in many cases, a substantial amount of knowledge about the enterprise. The amount and type of disclosure required for this person is not the same as for the typical investor with no particular connection with the issuer. The current standards of financial statement disclosure contained in Regulation A should satisfy our concerns for a level of disclosure that will provide basic protections in a compensatory transaction but may not be available as a result of ordinary employment or business dealings.[24] The standard is well established and may be very familiar to private issuers, since these financial statements and risk factor disclosure requirements are used not only in Regulation A, but also in the private placement exemptions contained in Regulation D.[25]

Compliance with the minimum disclosure standards for Rule 701 may not necessarily meet the antifraud standards of the securities law.[26] The disclosure required will depend upon the facts circumstances.[27]

Some commenters expressed concern that requiring a private issuer to deliver disclosure documents, particularly financial statements, to employee-investors could result in serious harm to the company if the information were to come into possession of its competitors. In view of the substantial amounts of securities that may now be issued under Rule 701, we believe that a minimal level of disclosure consisting of risk factors and Regulation A unaudited financial statements is essential to meet even the lower level of information needed to inform compensatory-type investors such as employees and consultants. Private issuers can use certain mechanisms, such as confidentiality agreements, to protect competitive information. Alternatively, an issuer could elect to stay below the $5 million threshold to avoid these disclosure obligations.

C. Foreign Private Issuers

In the Rule 701 Proposing Release, we especially sought comment on how foreign private issuers [28] should be treated under Rule 701, given that more and more U.S. persons are employed by foreign companies. Many foreign private issuers with substantial amounts of securities held by U.S. persons provide only ''home country reports'' and do not prepare financial statements with a reconciliation to U.S. generally accepted accounting principles (''GAAP'') because of the Rule 12g3–2(b) exemption from the registration requirements of the Exchange Act.[29] This exemption is available even though

[18] 17 CFR 230.501 *et seq.*

[19] See Preliminary Note 1 to Rule 701.

[20] A copy of the compensatory benefit plan or contract must be given to all offerees under current Rule 701. Under the revisions, this will continue to be required, whether or not the specific disclosure requirement is triggered by exceeding the $5 million amount.

[21] 29 U.S.C. 1104–1107.

[22] 17 CFR 239.90. Part F/S of Form 1–A generally provides for unaudited financial statements. However, issuers that have audited financial statements must provide them, instead of unaudited ones.

[23] 17 CFR 230.251 *et seq.*

[24] As proposed and adopted, if a reporting company is relying on Rule 701 to guarantee the obligations of a subsidiary's securities sold under the rule, the issuer must deliver the parent's financial statements that would be required by Rule 10–01 of Regulation S–X (17 CFR 210.10–01) and Item 310 of Regulation S–B (17 CFR 228.310). Rule 701(e)(5).

[25] See Rule 502(b)(2)(i)(A) of Regulation D [17 CFR 230.502(b)(2)(i)(A)].

[26] *E.g.,* Section 17(a) of the Securities Act [15 U.S.C. 77q(a)], Section 10(b) of the Exchange Act [15 U.S.C. 78j(b)], and Rule 10b–5 [17 CFR 240.10b–5].

[27] Issuers eligible to take advantage of the increased availability of the exemption also should be mindful of the requirements of the Exchange Act [15 U.S.C. 78*l*(g)]. Once an issuer exceeds 500 shareholders and $10 million in assets, it must register under Section 12(g) of the Exchange Act and provide full disclosure as a ''public'' company. See Rule 12g–1 [17 CFR 240.12g–1].

[28] This term is defined in Rule 405 [17 CFR 230.405].

[29] 17 CFR 240.12g3–2(b). Rule 12g3–2(b) exempts from Exchange Act registration securities of a foreign private issuer, if the issuer furnishes to us annual and other reports and other materials that are publicly available in its home market.

the number of U.S. holders may exceed 500 and total company assets exceed $10 million, which ordinarily would trigger the Exchange Act reporting requirements.

We solicited comment on whether non-reporting foreign private issuers should be subject to some annual ceiling, such as $10 million. Without a limit, the new calculation formula could result in the sale of a large amounts of securities to a many employees without such companies ever being required to register under the Securities Act or the Exchange Act. Commenters objected to a limit, noting that foreign private issuers typically undertake broad-based offerings to their U.S. employees for legitimate compensatory reasons and in order to treat all of their employees alike regardless of their location. Many commenters expressed the view that any tightening of the exemption for foreign private issuers would simply result in securities-based incentives not being offered to the U.S. employees of foreign issuers.

We have determined not to impose any annual ceiling on foreign private issuers, given the compensatory nature of Rule 701 offerings and the detrimental effect that such a rule could have on the compensation packages of U.S. employees. Instead, non-reporting foreign private issuers will be required to provide the same disclosure as non-reporting domestic issuers if sales under Rule 701 exceed $5 million in a 12-month period.[30] Imposing this obligation on all issuers is the price for removal of the $5 million offering limit.

We do not believe that any additional modification needs to be made at this time for foreign private issuers because they will be subject to the same disclosure requirements as domestic issuers. When, and if, we accept international accounting standards or guidelines for filing and reporting purposes, we would amend Rule 701 to allow these standards to satisfy the rule's financial statement disclosure obligations for foreign private issuers. For issuers making smaller offerings, the foreign companies may continue to follow the rule as they have in the past, which means that ''home country'' reports may be used, as necessary, to satisfy the antifraud standards. However, larger companies that cross the $5 million barrier will have to provide the disclosure required under Regulation A, which includes unaudited financial statements.

Where financial statements prepared in accordance with U.S. GAAP are not provided, a reconciliation to such principles must be attached.[31] The provisions of Regulation A suggest that a reconciliation is permitted only for Canadian companies. This is because Canadian companies are the only foreign issuers eligible to use that exemption. In contrast, any foreign issuer is eligible to use Rule 701, but if it exceeds the $5 million amount it must provide financial statements as required by Regulation A. If U.S. GAAP financials are not available, the financials provided must be reconciled to U.S. GAAP. Although there are costs involved in preparing the reconciliation and a number of the commenters objected to the notion of preparing a reconciliation to U.S. GAAP, we believe that the minimal level of disclosure for these compensatory transactions is the Regulation A financial statements, which must be reconciled to U.S. GAAP. Foreign private issuers that do not wish to provide the disclosure specified may elect to keep their Rule 701 sales below the $5 million threshold for disclosure, the same as for domestic issuers.

D. Consultants and Advisors

Like regular employees, consultants and advisors are eligible to receive securities under the Rule 701 exemption. Similarly, where the issuer is a reporting company, consultants and advisors may receive securities in a transaction registered on Form S–8.[32] Currently, the staff interprets the scope of eligible consultants and advisors differently for purposes of Rule 701 and Form S–8. The staff has interpreted Rule 701 to permit participation by a broader range of consultants and advisors, even though the words are identical in both Rule 701 and Form S–8.

At the same time we proposed changes to Rule 701, we proposed changes to Form S–8 to further limit further the scope of eligible consultants and advisors.[33] In many cases, the Form has been misused by registering shares for issuance to consultants and advisors who do not have sufficient connection and familiarity with, the company. In some cases, these persons are receiving the securities for capital-raising, rather than compensatory, purposes and engage in public distributions of the company's securities.[34]

In the Rule 701 Proposing Release, we asked how consultants and advisers participate in compensatory arrangements and whether we should restrict their participation. We also asked whether Rule 701 and Form S–8 should be harmonized in their treatment of these persons. We are concerned that persons who would misuse exemptions will develop new methods to abuse deregulatory safe harbors, even as we are taking steps to close down other avenues for abuse.

We have determined that the flexible definition of ''consultants and advisors,'' particularly in the context of registered offerings on Form S–8, has led to abuse. We are concerned that Rule 701 could be similarly abused if we make changes only to Form S–8, even though Rule 701 securities, unlike Form S–8 securities, are restricted.[35] We are therefore adopting a definition of the term ''consultants and advisors'' in Rule 701 that will harmonize with the new definition in Form S–8,[36] and narrow the scope of eligible consultants and advisors.

As revised, securities promoters clearly will be excluded from the scope of persons eligible to participate under the exemption. Independent agents,[37] franchisees and salespersons who do not have an employment relationship with the issuer no longer will be within the scope of ''consultant or advisor.''[38] A person in a *de facto* employment relationship with the issuer, such as a non-employee providing services that traditionally are performed by an

[30] See Section II.B above.

[31] See Item 17 of Form 20–F [17 CFR 249.220f].

[32] General Instruction A.1(a) to Form S–8.

[33] See Release No. 33–7506 (Feb. 17, 1998) [63 FR 9648] (''S–8 Proposing Release'').

[34] For a fuller discussion of misuse of Form S–8 involving consultant and advisors, see the S–8 Proposing Release and the S–8 Adopting Release. Today we also propose additional amendments to Form S–8, which are designed to address abuses in the use of that form.

[35] Ninety days after a company becomes subject to the reporting requirements of the Exchange Act, the restrictions lapse. Rule 701(g)(3). Under the revised rule, because all offers are exempt, and for purposes of ceiling calculations option exercise prices are used at the date of grant regardless of the current exercisability of the option, vested or unvested options will be exercisable in reliance upon Rule 701 even after the issuer becomes a public company. *Cf.* the interpretive letter to Richard M. Leisner (December 21, 1995).

[36] The S–8 Adopting Release adopts the ccorresponding changes into Form S–8. That release also provides additional guidance on determining the scope of eligible consultants and advisors. See S–8 Adopting Release Section II.A.2. This guidance is applicable to Rule 701 as well as to Form S–8.

[37] In the revisions to Form S–8 adopted today, we permit insurance agents who are exclusive agents of the issuer, its subsidiaries or parents or who derive more than 50% of their annual income from the issuer to be considered ''employees'' under Form S–8. We have made a corresponding change to Rule 701.

[38] The following interpretive letters defining eligible consultants or advisors under Rule 701 may no longer be relied upon, as of the effective date of the amendments, except to the extent that they have been relied upon for currently outstanding offers and previous sales under the provision: Golfpro, Inc. (October 3, 1989); Herff Jones, Inc. (November 13, 1990); Microchip Technology, Inc. (November 4, 1992); Optika Imaging Systems, Inc. (October 1, 1996); USWeb Corporation (November 7, 1996).

employee,[39] with compensation paid for those services being the primary source of the person's earned income, would qualify as an eligible person under the exemption.[40] Other persons displaying significant characteristics of ''employment,'' such as the professional advisor providing bookkeeping services, computer programming advice, or other valuable professional services may qualify as eligible consultants or advisors, depending upon the particular facts and circumstances.[41] Our staff will continue to handle questions about ''consultant or advisor'' status on a case-by-case basis through its interpretive letter process, but the terms will be interpreted in the same manner for both Rule 701 and Form S–8.

E. Other Revisions

Because it has become increasingly commonplace to sell stock of a private subsidiary to employees of a parent or affiliate subsidiary, and because these transactions retain the envisioned compensatory character, we have implemented our proposal to expand exemption coverage to sales to employees of majority-owned subsidiaries of the issuer's parent (*i.e.*, brother-sister subsidiaries).[42]

We also have adopted our proposal that Rule 701 should be available for sales, such as option exercises, by family donees of compensatory securities and transferees who receive these securities in divorce proceedings. Rule 701 is now available for immediate family members who have acquired such securities through a gift or a domestic relations order. For this purpose ''family member'' is defined as in Form S–8 to include any child, stepchild, grandchild, parent, stepparent, grandparent, spouse, former spouse, sibling, niece, nephew, mother-in-law, father-in-law, son-in-law, daughter-in-law, brother-in-law or sister-in-law, including adoptive relationships, any person sharing the employee's household (other than a tenant or employee), a trust in which these persons have more than a fifty percent beneficial interest, a foundation in which these persons (or the employee) control the management of assets, and any other entity in which these persons (or the employee) own more than fifty percent of the voting interests. This provision is consistent with the treatment of transferable securities under Form S–8.[43]

III. Cost-Benefit Analysis

As an aid in the evaluation of the costs and benefits of our original proposals, which were deregulatory in nature, we requested the views and other supporting information of the public. We received no comments in response to this request. Nonetheless, we believe that the rule as revised provides substantial benefits that justify any costs involved. A major feature of the exemption is its regulatory flexibility. Thus, benefits it offers include maintaining the existing exemption for small companies, expanding the availability of the exemption by applying otherwise established disclosure requirements, and permitting companies to preserve cash by using stock for compensatory purposes. The amended rule as a whole provides regulatory relief for companies, even larger ones, although relief with the fewest conditions continues to be for small issuers and others that decide to maintain their offerings below the $5 million ceiling.

For every issuer, the minimum available exemptive amount has been increased from $500,000 to $1 million. This doubling of exemption should be particularly attractive to smaller companies that are unable to utilize the formulas effectively. In addition, we have decided not to require specified disclosure requirements, including financial statements, for sales up to $5 million. Further, we determined not to reinstitute a filing requirement such as Form 701 to report when the exemption is used.

On the other hand, the revised rule provides no aggregate offering price ceiling and thus substantial amounts of securities exceeding $5 million may be issued by large private companies. If these companies do not want to disclose the requisite information to their employees and others, they may continue to follow the current provisions of the rule and keep the amount sold below $5 million in a 12-month period. In that case, they would not have to provide the specified disclosure.

The ability to reward and retain employees with a company's securities will permit companies to keep valuable employees without having to use other methods to compensate them, such as borrowing money or selling securities. Because the rule may encourage companies to offer incentives to their employees and others, for example through deferred compensation arrangements, and also facilitates interfamily donative transfers, it may provide benefits from the perspective of tax and estate planning as well.

We have concluded that the rule amendments will not result in a major increase in costs or prices for consumers or individual industries, or significant adverse effects on competition, employment, investment, productivity, innovation or small business. We believe that persons who will rely on the rule will not have significantly increased costs. In fact, since the current version of the rule is essentially retained for offerings under the former $5 million ceiling, there should be no change in the costs of compliance for issuers that have historically used the exemption and continue to keep their offerings under $5 million. For issuers that are large enough to go above the $5 million threshold and therefore are required to provide specified disclosure, any additional costs may not be significant. Some of the commenters fitting this profile stated that they either already provide or have the required information readily available for their employees and other persons.

Some issuers, however, will face costs in availing themselves of the increased benefits of the rule—primarily those who decide to issue more than $5 million worth of securities in the 12-month period. It is worth noting, however, that these increased costs would be borne voluntarily. Issuers can perform their own cost-benefit analysis to decide whether to do an offering in excess of $5 million under the rule. Currently, issuers do not have the option to make an offering exceeding $5 million under Rule 701. Even in these cases, the costs of using Rule 701 may be lower than the costs of using another exemption or registering the sales. Such costs may include ''in-house'' preparation of disclosure documents, hiring of attorneys and accountants, and delivery and printing costs.

[39] However, these services must not be in connection with the offer or sale of securities in a capital-raising transaction, and must not directly or indirectly promote or maintain a market for the issuer's securities.

[40] See Foundation Health Corporation (July 12, 1993).

[41] Morgan Health Group, Inc. (December 18, 1995); Princeton Medical Managers Resources (September 12, 1997); PHM Management Resources, Inc. (September 16, 1997); Talbert Medical Corporation (September 16, 1997); Osler Health, Inc. (February 11, 1998); Comprehensive Health Care Corp. (April 30, 1998) are inconsistent with the interpretation rendered in the *Foundation Health* letter under Form S–8 and are also overturned today, although they too may continue to be relied upon for outstanding offers and previous sales. These issuers may resubmit their interpretive requests for staff consideration, highlighting in their submissions the type of arrangements between the parties that show the services, if any, that the physicians provide to the issuers and others to permit an assessment of their status under the new ''consultant and advisor'' provision.

[42] Rule 701(c). Form S–8 continues to be unavailable for offers and sales to employees of brother-sister subsidiaries.

[43] See the S–8 Adopting Release.

Nonetheless, because there may be more securities sales to more investors, we believe that mandatory disclosure is necessary for investor protection.

The change to the ''consultants and advisors'' definition, which is necessary to counteract abuses we have found with some ''compensatory'' arrangements, will impact use of the Rule 701 exemption and perhaps disadvantage some issuers in their ability to effectively use the provision. However, the staff will continue to consider interpretive requests of the term, including reconsideration of some of the letters we are overturning today.

IV. Exemptive Authority Findings

We find that exempting transactions by nonreporting companies pursuant to compensatory benefit plans and written compensatory contracts from Section 5 of the Securities Act is appropriate in the public interest and is consistent with the protection of investors. We make these findings based on the reasons that we describe in this release. In particular, we have determined that Rule 701 has successfully allowed small businesses to compensate their employees with securities. The amendments will permit smaller businesses to issue up to $1 million in securities to their employees, an increase from the current $500,000 limit, without regard to the company's size. The amendments also will permit larger private companies to issue more than $5 million, subject to the established financial statement requirements of Regulation A and provision of risk factor disclosure. Our use of exemptive authority will allow more companies and more investors to benefit from this rule.

The rule is specifically designed not to raise capital. The ability to reward and retain employees with a company's securities should aid companies by providing a mechanism to keep valuable employees without having to use other methods to compensate them, such as borrowing money or selling securities. Finally, Rule 701 provides private companies with some of the benefits public companies have under Form S–8.

Furthermore, we have not found instances of abuse of Rule 701, nor have we become aware of investor complaints. Rather, investors have enjoyed the benefits of being compensated with the securities of the company for which they are employed or provide services. Therefore, we have found that Rule 701 has been consistent with investor protection in the past. We realize, however, that the exemption will lead to a greater volume of sales to a larger number of investors. We believe that requiring disclosure for these larger offerings will help assure that the use of our exemptive authority in this context is consistent with the protection of investors.

V. Summary of Final Regulatory Flexibility Analysis

In accordance with 5 U.S.C. 604, we have prepared a Final Regulatory Flexibility Analysis (''FRFA'') regarding the proposed amendments.

The analysis notes that the amendments to Rule 701 are a result of: (1) concerns expressed to us by practitioners; (2) feedback that the current dollar limitations unduly constrain the ability of many eligible issuers to use Rule 701; and (3) the specific Congressional mandate expressed in the legislative history of NSMIA. The purpose of the revisions is to remove unnecessary constraints. We have determined that the amendments will not impair investor protection.

As the FRFA describes, from mid-1988 through mid-1993, 1,069 companies filed 1,294 Forms 701 indicating aggregate sales of about $2.28 billion. On an annual basis, an average of 214 companies reported $456 million of sales on approximately 260 Forms 701. Based on an analysis of a sample of these filings, the Commission's Office of Economic Analysis estimates that 14% of the filings were made by small businesses. More current information is not available because Form 701 has not been a required submission since 1993.

The revisions should permit greater use of the exemption by small and large non-reporting issuers alike. The minimum amount that any issuer can raise under the exemption has been raised from $500,000 to $1 million. Greater availability of the exemption for employee benefit, deferred compensation and other plans, as well as to facilitate family donative transfers, should aid in tax and estate planning. We expect, therefore, that more companies will use the rule and that the value of securities sold under the exemption will be larger than it was in the 1988–1993 period. Accordingly, for purposes of estimating the amendments' economic impact, we estimate that 300 companies per year will make sales pursuant to Rule 701 and that 42 (14%) of those companies will be small businesses.

The amendments do not impose any new recordkeeping requirements or require reporting of additional information. Nonetheless, there is an impact, especially for larger private companies that choose to offer compensatory arrangements in excess of the current $5 million ceiling, as those companies will need to prepare specified disclosure and provide it to their participating employees. Because a number of commenters told us that this information is commonly maintained by this class of issuer (generally not small entities) in order to satisfy requirements for securities issuance exemptions (such as for private placements), loans and other purposes such as regulatory and internal ones, the amendments will not increase reporting, recordkeeping or compliance burdens, and may reduce those burdens for some companies.

As discussed more fully in the FRFA, several possible significant alternatives to the amendments were considered to minimize effects on small entities. These included establishing different compliance or reporting requirements for small entities, exempting them from all or part of the proposed requirements, or requiring them to provide different disclosure, such as all Form 1-A items or the full disclosure requirements of Form SB–1 or SB–2. In fact, the rule as adopted is changed from our initial proposal, which would have required all entities to provide certain disclosure. As adopted, only issuers selling more than $5 million during a 12-month period will be required to provide disclosure. The FRFA also indicates that no current federal rules duplicate, overlap, or conflict with the proposed rule amendments.

We encouraged written comments on any aspect of the Initial Regulatory Flexibility Analysis, but received no specific comments in response to our request. In particular, we sought comment on: (1) the number of small entities that would be affected by the proposed rule amendments; and (3) the determination that the proposed rule amendments would not increase (and in some cases may reduce) reporting, recordkeeping and other compliance requirements for small entities. For purposes of making determinations required by the Small Business Regulatory Enforcement Fairness Act of 1996 (''SBREFA''),[44] we also requested data regarding the potential impact of the proposed amendments on the economy on an annual basis. We received no comments in response to this request either. A copy of the Final Regulatory Flexibility Act Analysis may be obtained from Twanna M. Young, Office of Small Business, Division of Corporation Finance, Securities and

[44] Pub. L. No. 104–121, 110 Stat. 857 (1996) (codified in various sections of 5 U.S.C., 15 U.S.C., and as a note to 5 U.S.C. 601).

Exchange Commission, 450 Fifth Street, NW, Washington, DC 20549.

VI. Paperwork Reduction Act

Our staff consulted with the Office of Management and Budget (''OMB'') and submitted the proposals for review in accordance with the Paperwork Reduction Act of 1995 (''the Act'').[45] The title to the affected information collection is: ''Rule 701.'' The specific information that must be included is explained in the rule itself, and relates to the issuer and other information that may be associated with investment in securities under the plan or agreement. The information is needed by prospective purchasers to make informed investment decisions.

The proposed amendments will increase the flexibility and utility of Rule 701 for private companies using securities to compensate their employees.

The collection of information in Rule 701 will be required in order for companies to use the rule for sales of their securities to their employees and other persons covered by the rule. The likely respondents to the rule are companies that previously used the rule, but were being constrained by its limits, and companies thatwho could not use the rule at all because of its limits. While we cannot predict the number of respondents that may use expanded Rule 701, there were 1,294 Form 701 filings during the period from mid-1988 through mid-1993, when persons relying upon the exemption were required to file reports with us concerning their use of the exemption. On the basis of these historical filings under Rule 701, we estimate that approximately 300 companies each year will rely on the exemption. The estimated burden for responding to the collection of information in Rule 701 will not increase for most companies due to the current disclosure requirements in Rule 701, but may increase slightly for other companies who may not be currently providing risk factors and Regulation A financial statements to employee-purchasers. We estimate that the burden hours per respondent each year will be two. Therefore, we estimate an aggregate of 600 burden hours per year.

The information collection requirements imposed by Rule 701 are mandatory to the extent that a company elects to use the Rule 701 exemption. The information will be disclosed to third parties or the public. An agency may not conduct or sponsor, and a person is not required to respond to, a collection of information unless it displays a current valid OMB control number.

We received no comments in response to our request for comment regarding the information collection obligation.

VII. Statutory Basis, Text of Amendments and Authority

The amendments to our rules and forms are being adopted pursuant to sections 2, 3(b), 6, 7, 8, 10, 19(a) and 28 of the Securities Act.

List of Subjects in 17 CFR Part 230

Reporting and recordkeeping requirements, Securities.

For the reasons set out in the preamble, title 17, chapter II of the Code of Federal Regulations is amended as follows:

PART 230—GENERAL RULES AND REGULATIONS, SECURITIES ACT OF 1933

1. The authority citation for part 230 continues to read as follows:

Authority: 15 U.S.C. 77b, 77f, 77g, 77h, 77j, 77r, 77s, 77sss, 78c, 78d, 78l, 78m, 78n, 78o, 78w, 78*ll*(d), 79t, 80a–8, 80a-24, 80a–28, 80a–29, 80a–30, and 80a–37, unless otherwise noted.

2. By revising § 230.701 to read as follows:

§ 230.701 Exemption for offers and sales of securities pursuant to certain compensatory benefit plans and contracts relating to compensation.

Preliminary Notes

1. This section relates to transactions exempted from the registration requirements of section 5 of the Act (15 U.S.C. 77e). These transactions are not exempt from the antifraud, civil liability, or other provisions of the federal securities laws. Issuers and persons acting on their behalf have an obligation to provide investors with disclosure adequate to satisfy the antifraud provisions of the federal securities laws.

2. In addition to complying with this section, the issuer also must comply with any applicable state law relating to the offer and sale of securities.

3. An issuer that attempts to comply with this section, but fails to do so, may claim any other exemption that is available.

4. This section is available only to the issuer of the securities. Affiliates of the issuer may not use this section to offer or sell securities. This section also does not cover resales of securities by any person. This section provides an exemption only for the transactions in which the securities are offered or sold by the issuer, not for the securities themselves.

5. The purpose of this section is to provide an exemption from the registration requirements of the Act for securities issued in compensatory circumstances. This section is not available for plans or schemes to circumvent this purpose, such as to raise capital. This section also is not available to exempt any transaction that is in technical compliance with this section but is part of a plan or scheme to evade the registration provisions of the Act. In any of these cases, registration under the Act is required unless another exemption is available.

(a) *Exemption.* Offers and sales made in compliance with all of the conditions of this section are exempt from section 5 of the Act (15 U.S.C. 77e).

(b) *Issuers eligible to use this section.* (1) *General.* This section is available to any issuer that is not subject to the reporting requirements of section 13 or 15(d) of the Securities Exchange Act of 1934 (the ''Exchange Act'') (15 U.S.C. 78m or 78o(d)) and is not an investment company registered or required to be registered under the Investment Company Act of 1940 (15 U.S.C. 80a-1 *et seq.*).

(2) *Issuers that become subject to reporting.* If an issuer becomes subject to the reporting requirements of section 13 or 15(d) of the Exchange Act (15 U.S.C. 78m or 78o(d)) after it has made offers complying with this section, the issuer may nevertheless rely on this section to sell the securities previously offered to the persons to whom those offers were made.

(3) *Guarantees by reporting companies.* An issuer subject to the reporting requirements of section 13 or 15(d) of the Exchange Act (15 U.S.C. 78m, 78o(d)) may rely on this section if it is merely guaranteeing the payment of a subsidiary's securities that are sold under this section.

(c) *Transactions exempted by this section.* This section exempts offers and sales of securities (including plan interests and guarantees pursuant to paragraph (d)(2)(ii) of this section) under a written compensatory benefit plan (or written compensation contract) established by the issuer, its parents, its majority-owned subsidiaries or majority-owned subsidiaries of the issuer's parent, for the participation of their employees, directors, general partners, trustees (where the issuer is a business trust), officers, or consultants and advisors, and their family members who acquire such securities from such persons through gifts or domestic relations orders. This section exempts offers and sales to former employees, directors, general partners, trustees, officers, consultants and advisors only if such persons were employed by or providing services to the issuer at the time the securities were offered. In addition, the term ''employee'' includes insurance agents who are exclusive agents of the issuer, its subsidiaries or

[45] 44 U.S.C. 3501 *et seq.*

parents, are or derive more than 50% of their annual income from those entities.

(1) *Special requirements for consultants and advisors.* This section is available to consultants and advisors only if:

(i) They are natural persons;

(ii) They provide *bona fide* services to the issuer, its parents, its majority-owned subsidiaries or majority-owned subsidiaries of the issuer's parent; and

(iii) The services are not in connection with the offer or sale of securities in a capital-raising transaction, and do not directly or indirectly promote or maintain a market for the issuer's securities.

(2) *Definition of ''Compensatory Benefit Plan.''* For purposes of this section, a *compensatory benefit plan* is any purchase, savings, option, bonus, stock appreciation, profit sharing, thrift, incentive, deferred compensation, pension or similar plan.

(3) *Definition of ''Family Member.''* For purposes of this section, *family member* includes any child, stepchild, grandchild, parent, stepparent, grandparent, spouse, former spouse, sibling, niece, nephew, mother-in-law, father-in-law, son-in-law, daughter-in-law, brother-in-law, or sister-in-law, including adoptive relationships, any person sharing the employee's household (other than a tenant or employee), a trust in which these persons have more than fifty percent of the beneficial interest, a foundation in which these persons (or the employee) control the management of assets, and any other entity in which these persons (or the employee) own more than fifty percent of the voting interests.

(d) *Amounts that may be sold.* (1) *Offers.* Any amount of securities may be offered in reliance on this section. However, for purposes of this section, sales of securities underlying options must be counted as sales on the date of the option grant.

(2) *Sales.* The aggregate sales price or amount of securities sold in reliance on this section during any consecutive 12-month period must not exceed the greatest of the following:

(i) $1,000,000;

(ii) 15% of the total assets of the issuer (or of the issuer's parent if the issuer is a wholly-owned subsidiary and the securities represent obligations that the parent fully and unconditionally guarantees), measured at the issuer's most recent annual balance sheet date (if no older than its last fiscal year end); or

(iii) 15% of the outstanding amount of the class of securities being offered and sold in reliance on this section, measured at the issuer's most recent annual balance sheet date (if no older than its last fiscal year end).

(3) *Rules for calculating prices and amounts.* (i) *Aggregate sales price.* The term *aggregate sales price* means the sum of all cash, property, notes, cancellation of debt or other consideration received or to be received by the issuer for the sale of the securities. Non-cash consideration must be valued by reference to *bona fide* sales of that consideration made within a reasonable time or, in the absence of such sales, on the fair value as determined by an accepted standard. The value of services exchanged for securities issued must be measured by reference to the value of the securities issued. Options must be valued based on the exercise price of the option.

(ii) *Time of the calculation.* With respect to options to purchase securities, the aggregate sales price is determined when an option grant is made (without regard to when the option becomes exercisable). With respect to other securities, the calculation is made on the date of sale. With respect to deferred compensation or similar plans, the calculation is made when the irrevocable election to defer is made.

(iii) *Derivative securities.* In calculating outstanding securities for purposes of paragraph (d)(2)(iii) of this section, treat the securities underlying all currently exercisable or convertible options, warrants, rights or other securities, other than those issued under this exemption, as outstanding. In calculating the amount of securities sold for other purposes of paragraph (d)(2) of this section, count the amount of securities that would be acquired upon exercise or conversion in connection with sales of options, warrants, rights or other exercisable or convertible securities, including those to be issued under this exemption.

(iv) *Other exemptions.* Amounts of securities sold in reliance on this section do not affect ''aggregate offering prices'' in other exemptions, and amounts of securities sold in reliance on other exemptions do not affect the amount that may be sold in reliance on this section.

(e) *Disclosure that must be provided.* The issuer must deliver to investors a copy of the compensatory benefit plan or the contract, as applicable. In addition, if the aggregate sales price or amount of securities sold during any consecutive 12-month period exceeds $5 million, the issuer must deliver the following disclosure to investors a reasonable period of time before the date of sale:

(1) If the plan is subject to the Employee Retirement Income Security Act of 1974 (''ERISA'') (29 U.S.C. 1104–1107), a copy of the summary plan description required by ERISA;

(2) If the plan is not subject to ERISA, a summary of the material terms of the plan;

(3) Information about the risks associated with investment in the securities sold pursuant to the compensatory benefit plan or compensation contract; and

(4) Financial statements required to be furnished by Part F/S of Form 1–A (Regulation A Offering Statement) (§ 239.90 of this chapter) under Regulation A (§§ 230.251 through 230.263). Foreign private issuers as defined in § 230.405 must provide a reconciliation to generally accepted accounting principles in the United States (U.S. GAAP) if their financial statements are not prepared in accordance with U.S. GAAP (Item 17 of Form 20–F (§ 249.220f of this chapter)). The financial statements required by this section must be as of a date no more than 180 days before the sale of securities in reliance on this exemption.

(5) If the issuer is relying on paragraph (d)(2)(ii) of this section to use its parent's total assets to determine the amount of securities that may be sold, the parent's financial statements must be delivered. If the parent is subject to the reporting requirements of section 13 or 15(d) of the Exchange Act (15 U.S.C. 78m or 78o(d)), the financial statements of the parent required by Rule 10–01 of Regulation S–X (§ 210.10–01 of this chapter) and Item 310 of Regulation S–B (§ 228.310 of this chapter), as applicable, must be delivered.

(6) If the sale involves a stock option or other derivative security, the issuer must deliver disclosure a reasonable period of time before the date of exercise or conversion. For deferred compensation or similar plans, the issuer must deliver disclosure to investors a reasonable period of time before the date the irrevocable election to defer is made.

(f) *No integration with other offerings.* Offers and sales exempt under this section are deemed to be a part of a single, discrete offering and are not subject to integration with any other offers or sales, whether registered under the Act or otherwise exempt from the registration requirements of the Act.

(g) *Resale limitations.* (1) Securities issued under this section are deemed to be ''restricted securities'' as defined in § 230.144.

(2) Resales of securities issued pursuant to this section must be in compliance with the registration

requirements of the Act or an exemption from those requirements.

(3) Ninety days after the issuer becomes subject to the reporting requirements of section 13 or 15(d) of the Exchange Act (15 U.S.C. 78m or 78o(d)), securities issued under this section may be resold by persons who are not affiliates (as defined in § 230.144) in reliance on § 230.144, without compliance with paragraphs (c), (d), (e) and (h) of § 230.144, and by affiliates without compliance with paragraph (d) of § 230.144.

Dated: February 25, 1999.

By the Commission.

Margaret H. McFarland,

Deputy Secretary.

[FR Doc. 99–5296 Filed 3–5–99; 8:45 am]

BILLING CODE 8010–01–U

SECURITIES AND EXCHANGE COMMISSION

17 CFR Parts 228, 229, 230 and 239

[Release No. 33–7646, 34–41109; File No. S7–2–98]

RIN 3235–AG94

Registration of Securities on Form S–8

AGENCY: Securities and Exchange Commission.

ACTION: Final rule.

SUMMARY: The Securities and Exchange Commission (''we'' or ''Commission'') is adopting amendments to Form S–8, related rules under the Securities Act, and Regulations S–K and S–B. Some of the amendments restrict the use of Form S–8 for the offer and sale of securities to consultants and advisors. Other amendments allow the use of Form S–8 for the exercise of stock options by family members of employee optionees.

DATES: *Effective Date:* The amendments are effective April 7, 1999. *Compliance Date:* Currently effective registration statements on Form S–8 need not comply with amended § 230.405 and amended General Instruction A.1.(a)(1) to Form S–8 (referenced in § 239.16b) until May 10, 1999.

FOR FURTHER INFORMATION CONTACT: Anne M. Krauskopf, Special Counsel, Office of Chief Counsel, Division of Corporation Finance, at (202) 942–2900.

SUPPLEMENTARY INFORMATION: We are adopting amendments to Rules 401 [1] and 405 [2] under the Securities Act of 1933 (''Securities Act''),[3] Item 402 [4] of Regulations S–B and S–K, and Securities Act Forms S–3 [5] and S–8.[6]

I. Executive Summary

Today we adopt rule amendments that address two separate concerns involving the use of Form S–8 to register the offer and sale of employee benefit plan securities.

- First, we adopt amendments designed to restrict the availability of streamlined registration on Form S–8 in order to deter abuse of the form. In particular, the form has been misused to sell securities to the general public through employees and nominal ''consultants and advisors,'' and to register securities issued to stock promoters. We are adopting these amendments as part of our comprehensive agenda to deter registration and trading abuses, including microcap fraud.[7]
- Second, we are expanding Form S–8 to cover stock option exercises by employees' family members, so that the rules governing use of the form do not impede legitimate intra-family transfers of options by employees. These amendments will facilitate transfers for estate planning purposes and transfers under domestic relations orders.

Form S–8 is available to register the offer and sale of securities to the issuer's employees [8] in a compensatory or incentive context. In 1990, we adopted substantial revisions to Form S–8,[9] including making the form effective immediately upon filing and abbreviating the disclosure format. We permitted the delivery of regularly prepared materials advising employees about benefit plans to satisfy Securities Act prospectus delivery requirements, eliminating the need to file and deliver a separate prospectus that duplicates this information. This treatment reflected a distinction we traditionally have drawn between offerings to employees primarily for compensatory and incentive purposes and offerings for capital-raising purposes. The compensatory purpose of the offering and employees' familiarity with the issuer's business through the employment relationship justify the use of abbreviated disclosure that would not be adequate in a capital-raising transaction.[10]

The 1990 revisions also made Form S–8 available for offers and sales of securities to consultants and advisors. To be eligible, a consultant must provide the issuer *bona fide* services *not* in connection with the offer or sale of securities in a capital-raising transaction. There did not appear to be a reason to distinguish between transactions with regular employees and transactions with consultants or advisors, as long as securities are issued for compensatory rather than capital-raising purposes.

A. Abuses of Form S–8

Since the 1990 revisions, some issuers and promoters have misused Form S–8 as a means to distribute securities to the public without the protections of registration under Section 5 of the Securities Act. For example, the issuer registers on Form S–8 securities nominally offered and sold to employees or, more commonly, to so-called ''consultants.'' These persons then resell the securities in the public markets, at the direction of the issuer or a promoter. In some cases, the consultants or employees perform limited or no additional services for the issuer. The consultants or employees then either remit to the issuer the proceeds from these resales, or apply those proceeds to pay expenses of the issuer that are not related to any service provided by the consultants or employees.[11]

Registration of the shares on Form S–8 does not accomplish Section 5 registration of these public sales. The

---

[1] 17 CFR 230.401.

[2] 17 CFR 230.405.

[3] 15 U.S.C. 77a *et seq.*

[4] 17 CFR 228.402 and 17 CFR 229.402.

[5] 17 CFR 239.13.

[6] 17 CFR 239.16b.

[7] See also Securities Act Release No. 7505 (Feb. 17, 1998) [63 FR 9632], adopting amendments to Regulation S [17 CFR 230.901 *et seq.*]; Release No. 39670 (Feb. 17, 1998) [63 FR 9661] under the Securities Exchange Act of 1934 (''Exchange Act'') [15 U.S.C. 78a *et seq.*], proposing amendments to Exchange Act Rule 15c2–11 [17 CFR 240.15c2–11]; Securities Act Release No. 7541 (May 21, 1998) [63 FR 29168], proposing amendments to Rule 504 [17 CFR 230.504]; Securities Act Release No. 7644 (Feb. 25, 1999), adopting amendments to Rule 504; and Exchange Act Release No. 41110 (Feb. 25, 1999), reproposing amendments to Rule 15c2–11.

[8] For this purpose, ''employees'' also includes the employees of the issuer's subsidiaries or parents. See General Instruction A.1(a) to Form S–8.

[9] Securities Act Release No. 6867 (June 6, 1990) [55 FR 23909].

[10] Form S–8 also permits incorporation by reference of the registrant's Exchange Act reports without regard to the length of the issuer's reporting history or the aggregate market value of its securities held by the nonaffiliated public (the issuer's ''public float''). Incorporation by reference from Exchange Act reports into a Securities Act registration statement is not otherwise available unless the issuer satisfies the eligibility requirements for Form S–2 [17 CFR 239.12], Form S–3, Form F–2 [17 CFR 239.32] or Form F–3 [17 CFR 239.33].

[11] See, *e.g., In the Matter of Spectrum Information Technologies, Inc.* (''*Spectrum*''), Securities Act Release No. 7426, Exchange Act Release No. 38774, Accounting and Auditing Enforcement Release No. 930 (June 25, 1997); *SEC* v. *Hollywood Trenz, Inc.* (''*Hollywood Trenz*''), Litigation Release No. 15730, Accounting and Auditing Enforcement Release No. 1032 (May 4, 1998).

transaction that takes place (a capital-raising transaction with the public) is a different transaction from the transaction registered on Form S–8 (a compensatory transaction with employees, including consultants). Although the issuer purports to sell securities to employees, the securities instead are sold to the public. The ''employees'' act as conduits by selling the securities to the public and distributing the proceeds (or their economic benefit) to the issuer. This public sale of securities by the issuer has not been registered, although the Securities Act requires registration. The failure to register this sale of securities deprives public investors of the protections afforded by the Securities Act.

Form S–8 also has been misused to register securities issued to compensate ''consultants'' and ''advisors'' for promoting the issuer's securities.[12] This practice facilitates securities fraud by providing compensation as incentive to persons who hype the issuer's stock, and may result in these persons conditioning the market for resales of the issuer's securities.

Today we are adopting some of the amendments that we proposed in February 1998 which are designed to prevent these abuses.[13] The amendments will:

- Clarify that Form S–8 is not available for consultants and advisors who directly or indirectly promote or maintain a market for the issuer's securities; and
- Provide that certain registration statements and post-effective amendments that automatically become effective upon filing will not be presumed filed on the proper form if the Commission does not object to the form before the effective date.

We are not adopting today the 1998 proposal to require disclosure in Part II of Form S–8 of the names of, number of securities to be received by, and specific services to be provided by consultants and advisors (the ''Part II disclosure proposal''), nor are we taking any action on the other matters on which we solicited comment. Many commenters viewed these means of addressing consultant abuses as overly broad and burdensome to legitimate compensatory securities offerings.

Instead, in a companion release we have issued a new proposal that is targeted to prevent abuse of Form S–8 by the types of issuers who have shown the greatest inclination to abuse the form while, to the extent possible, keeping the form available to register legitimate compensatory transactions.[14] In the companion release, we also have extended the comment period on the Part II disclosure proposal and various requests for comment that were included in the Proposing Release (together, the ''remaining proposals'')[15] for the duration of the comment period on the new proposal.

We may adopt any combination of the remaining proposals, the new proposal and new solicitations of comment set forth in the companion release. We no longer are considering our 1998 request for comment whether each consulting or advisory agreement should be filed as an exhibit to the Form S–8, and do not intend to adopt an amendment based on this request for comment.

B. Option Exercises by Family Member Transferees; Executive Compensation Disclosure

Currently, Form S–8 is available for the exercise of employee benefit plan stock options only if the option is exercised by the employee/optionee. If an issuer wants to permit an employee's family member transferee to exercise an employee benefit plan option, it must register the sale of the underlying securities upon exercise on a separate, less streamlined registration statement.[16]

An employee may obtain significant estate tax savings under current tax law if the employee, during his or her lifetime, transfers a vested option to a family member, who then exercises it. From a tax standpoint, exercise of the option by the employee, with the underlying security later passing to a family member through the employee's taxable estate, is more costly. Our 1996 amendments to the rules under Exchange Act Section 16[17] facilitated employees' transfers of options and other derivative securities to their immediate family members (and trusts and partnerships for their benefit) for estate planning purposes.

In the Proposing Release, we proposed amendments that would make Form S–8 available for registration of employee benefit plan stock options exercised by an employee's family member. Today, we adopt amendments that will:

- Make Form S–8 available for the exercise of employee benefit plan options by an employee's family member who has acquired the options from the employee through a gift or domestic relations order. For this purpose, ''family member'' will include nieces and nephews, a former spouse, any person sharing the employee's household (other than a tenant or employee), and specified family-related trusts, foundations and other entities, as well as the relatives listed in the definition as originally proposed;
- Make Form S–8 available to former employees for the exercise of transferable, as well as non-transferable, options; and
- Revise executive compensation disclosure requirements to clarify how options and stock appreciation rights (''SARs'') that have been transferred should be reported.

We also adopt amendments to Form S–3 to make that form equally available for the offer and sale of securities underlying both warrants and options, in each case whether or not the securities are transferable.

II. Abuses of Form S–8

A. Consultants and Advisors Eligible for Form S–8 Transactions

1. General

To prevent further abuse of Form S–8 as a vehicle to make unregistered securities distributions to the general public and to register securities issued to stock promoters, we are amending the instructions to Form S–8[18] and the Securities Act definition of ''employee benefit plan.''[19] Currently, the instructions to Form S–8 allow the form to be used only to register the offer and sale of an issuer's securities to the issuer's employees (or employees of its parents or subsidiaries) under an employee benefit plan. The Form S–8 definition of ''employee'' and the Securities Act definition of ''employee benefit plan'' both permit participation by a consultant or advisor who provides *bona fide* services to the issuer other than in connection with the offer or sale of securities in a capital-raising transaction. In response to telephone

[12] See, *e.g.*, *SEC* v. *Softpoint*, Litigation Release No. 14480, Accounting and Auditing Release No. 666 (Apr. 27, 1995).

[13] Securities Act Release No. 7506 (Feb. 17, 1998) [63 FR 9648] (''Proposing Release''). We received 17 comment letters on the Proposing Release. These comment letters and a Comment Summary are available for inspection and copying in the Commission's Public Reference Room under file number S7–2–98. Comments that were submitted electronically are available on the Commission's website (http://www.sec.gov).

[14] Securities Act Release No. 7647 (Feb. 25, 1999).

[15] The remaining proposals are described in greater detail in Section II.C, below.

[16] See *Use of Form S–3 for Transferred Options* (Aug. 7, 1997), which allows options transferred by gift from employees to their immediate family members to be treated like ''transferable warrants'' for purposes of registration on Securities Act Form S–3.

[17] 15 U.S.C. 78p. The Section 16 amendments are discussed in greater detail in Section III.A.1, below.

[18] General Instruction A.1(a).

[19] Securities Act Rule 405.

inquiries, the staff has interpreted these standards to preclude the issuance of securities on Form S–8 to consultants or advisors either:

- As compensation for any service that directly or indirectly promotes or maintains a market for the issuer's securities; or
- As conduits for distributing securities to the general public.

The staff also has stated that a consultant or advisor must be a natural person, the consulting contract must be between the issuer and this natural person, and the issuer must issue the securities directly to this natural person.[20]

Despite these express limitations, some issuers improperly have taken advantage of the abbreviated disclosure requirements and automatic effectiveness of Form S–8[21] (and the related absence of staff review) to register securities that are issued in capital-raising transactions. In these cases, a company issues shares registered on Form S–8 to purported employees or other nominees, designated as ''consultants'' or ''advisors,'' who often do not provide any services to the company that properly may be compensated with securities registered on Form S–8. By prearrangement, these nominees resell the shares on an unregistered basis, remitting the proceeds to the company or its affiliates, or using them to pay the company's expenses. These unregistered resales deprive the real public purchasers of the protections of Securities Act registration. Some companies have repeated this process through a series of Forms S–8, distributing a significant percentage—if not most—of the company's outstanding shares in this manner.[22]

In distributing securities to the public on the issuer's behalf, these consultants or employees act as ''underwriters.''[23] The Form S–8 registration statement registers only offers and sales of securities to the company's employees and consultants or advisors. But the securities issued to these people do not come to rest. Instead, these people act as conduits for unregistered offers and sales of securities to the public for which no exemption is available.[24] In these circumstances, we have charged both issuers and consultants acting as nominees with violating Sections 5(a) and 5(c) of the Securities Act.[25] We also have charged violations of the antifraud provisions of the Securities Act and the Exchange Act[26] for misrepresentations in the Form S–8 that the securities are issued as compensation for consulting services rather than to raise capital for the issuer.[27]

Issuers also have misused Form S–8 to register securities issued to consultants and advisors as compensation for their services as stock promoters. Public investors who purchase these securities in effect compensate promoters for their services to the issuer, which sometimes include the dissemination of material fraudulent information. These transactions are outside the scope of transactions permitted to be registered on Form S–8.

To deter these abuses of Form S–8, we proposed to include in the Form S–8 instruction regarding consultant and advisor eligibility further restrictions on compensable consulting services. We proposed to require a consultant or advisor to provide the registrant *bona fide* services that do not directly or indirectly promote or maintain a market for the registrant's securities. This would be in addition to the existing limitation that consultant services may not be in connection with the offer and sale of securities in a capital-raising transaction. To preclude the use of consultant entities as underwriters, we also proposed to codify the requirement that a consultant or advisor must be a natural person who contracts directly with the registrant. We proposed parallel amendments to the Securities Act definition of ''employee benefit plan,'' so that the standards for consultant participation would be uniform. We are adopting these proposals, modified slightly as described below.[28]

While commenters agreed that these proposed amendments could help deter the abusive use of Form S–8, they asked us to provide interpretive guidance to assist issuers in determining what consultant services properly may be compensated with securities registered on Form S–8. Commenters were particularly concerned that a broad range of legitimate financial consultants whose services do not involve underwriting, market making or stock promotion would be precluded from using Form S–8. In this release we provide interpretive guidance to issuers, and also rewrite the current requirements to put them in plain English.

We agree with commenters that it should not matter if the consulting contract is with an entity or a natural person, as long as the securities registered are issued to the natural persons working for the consulting entity who provide *bona fide* services to the issuer. Where the securities are issued to these persons, contracting with a consulting entity would not abuse Form S–8. We have revised the amendments to eliminate the proposed requirement that issuers contract only with natural persons, while retaining the requirement that the securities must be issued to natural persons.[29]

As adopted, the amended Form S–8 instruction and the parallel amendment to the Rule 405 definition of ''employee benefit plan'' permit consultants and advisors to be treated like employees only if:

- The consultants and advisors are natural persons;

[20] See *Image Entertainment* (Mar. 6, 1992). However, where the consultant or advisor performs services for the issuer through a wholly-owned corporate alter ego, the issuer may contract with, and register securities on Form S–8 as compensation to, that corporate entity. See *Aaron Spelling Productions, Inc.* (July 1, 1987).

[21] Under Rule Securities Act 462(a) [17 CFR 230.462(a)], a Form S–8 registration statement becomes effective as soon as it is filed with the Commission. Under Rule 464(a) [17 CFR 230.464 (a)], a post-effective amendment filed on Form S–8 also becomes effective upon filing.

[22] See, *e.g., In the Matter of Sky Scientific, Inc.* (''*Sky Scientific*''), Securities Act Release No. 7372, Exchange Act Release No. 38049, Accounting and Auditing Enforcement Release No. 863 (Dec. 16, 1996), in which the company conducted an unregistered distribution to the public by misusing 106 registration statements and post-effective amendments on Form S–8, distributing approximately 30 million shares of common stock.

[23] ''Underwriter'' is defined in Section 2(a)(11) of the Securities Act [15 U.S.C. 77b(a)(11)] to include ''any person who has purchased from an issuer with a view to, or offers or sells for an issuer in connection with, the distribution of any security, or participates or has a direct or indirect participation in any such undertaking, or participates or has a participation in the direct or indirect underwriting of any such undertaking. . . .''

[24] In particular, the ''resale'' exemption of Securities Act Section 4(1) [15 U.S.C. 77d(1)] for ''any person other than an issuer, underwriter or dealer'' is not available because these nominees act as underwriters, as explained above.

[25] See, *e.g., Sky Scientific,* cited at n. 22 above; *Spectrum,* cited at n. 11 above; and *Hollywood Trenz,* cited at n. 11 above. *See also SEC v. Charles O. Huttoe, et al.* (''*Huttoe*''), Litigation Release No. 15153 (Nov. 7, 1996).

[26] Section 17(a) of the Securities Act [15 U.S.C. 77q(a)], Section 10(b) of the Exchange Act [15 U.S.C. 78j(b)] and Rule 10b–5 thereunder [17 CFR 240.10b–5].

[27] See, *e.g., SEC v. Softpoint, Inc.,* cited at n. 12 above; and *Hollywood Trenz,* cited at n. 11 above.

[28] Today we also adopt a similar amendment to Securities Act Rule 701 [17 CFR 230.701], the Securities Act exemption for offers and sales of securities by non-reporting companies as employee compensation.

[29] However, in the limited circumstance where a consultant or advisor performs services for the issuer through a wholly-owned corporate alter ego, we will continue to permit issuers to register on Form S–8 securities issued as compensation to that corporate entity. *See Aaron Spelling Productions,* cited at n. 20 above.

• The consultants and advisors provide *bona fide* services to the registrant; and

• The services provided by the consultants and advisors are not in connection with the offer or sale of securities in a capital-raising transaction, and do not directly or indirectly promote or maintain a market for the registrant's securities.

2. Interpretive Guidance

Following adoption of these amendments, we will continue to take the view that Form S–8 is not available to register offers and sales of securities to either traditional employees *or* consultants and advisors where:

• By prearrangement or otherwise, the issuer or a promoter controls or directs the resale of the securities in the public market; [30] or

• The issuer or its affiliates directly or indirectly receive a percentage of the proceeds from such resales.[31]

In other circumstances, Form S–8 will remain available to register securities issued as compensation for the services of traditional employees, without regard to the specific character of the service. However, as to consultants and advisors, the character of the service provided will determine whether Form S–8 is available, as described below. Brokers, dealers and persons who find investors will be excluded from receiving securities registered on Form S–8 because their services, as securities industry professionals, are inherently capital-raising. Consultants who provide investor relations or shareholder communications services also will be excluded, because of the promotional nature of their services.

We also will interpret the amendments to prohibit the issuance of securities registered on Form S–8 to persons who arrange or effect mergers that take private companies public. For example, a merger into a thinly capitalized ''shell'' company with a class of securities registered under the Exchange Act, or a subsidiary of such a company, will fall into this category. These mergers commonly are used to develop a market for the merged entity's securities, often as part of a scheme to ''pump and dump'' those securities. Persons who arrange ''put together'' mergers, in which the consolidation of numerous businesses is conditioned on the combined entity's going public, also will be precluded from being compensated with securities registered on Form S–8.

The prohibition relating to services that directly or indirectly promote or maintain a market for securities is aimed at services that may reasonably be expected to raise (or sustain) the market price of the registrant's securities. For example, persons who hype the issuer's securities in an Internet newsletter, or otherwise publish or disseminate information that reasonably may be expected to influence the price of the issuer's securities, must not be compensated with Form S–8 registered securities, whether or not receipt of compensation from the issuer is disclosed.[32]

Consultants who publish legitimate scientific or medical research in publications generally circulated only within the scientific or medical community typically will not run afoul of this prohibition. However, consultants who circulate this kind of research to a broader audience in a manner reasonably expected to raise or sustain the market price of the registrant's securities may not be compensated with Form S–8 registered securities. Similarly, consultants who provide product or corporate image advertising usually will be able to receive Form S–8 registered securities. However, whether activities that nominally promote the issuer's products or image have the purpose or effect of promoting or maintaining a market for the issuer's securities would depend on the facts and circumstances. The more the services reflect traditional advertising practices, the more likely they are to be viewed as product-oriented.

The revised instruction will not prevent *all* financial consultants from being compensated with securities registered on Form S–8. Instead, eligibility will depend on the specific character of the services provided. For example, business development consultants retained to identify another company as a potential partner for technology development may be compensated with securities registered on the form. A consultant who advises the issuer on business strategy or compensation policies also will be eligible. A consultant who arranges a bank credit line for the issuer similarly will be eligible. In contrast, a consultant who arranges a financing that involves any securities issuance—whether equity or debt—will not be eligible.

Whether a consultant retained to perform management functions traditionally performed by an employee, such as a consultant chief financial officer, is eligible will not be determined based on the person's title. Instead, eligibility will depend on the primary character of the services provided. Where the services are primarily capital-raising or promotional, Form S–8 will not be available to register securities issued as compensation.

The independence requirements of generally accepted auditing standards (''GAAS'') effectively prohibit accountants who audit the issuer's financial statements from receiving the issuer's securities as compensation for their services.[33]

Attorneys [34] who represent an issuer in matters that are not related to its securities, such as litigation defense, securing U.S. Food and Drug Administration approval of a drug, or obtaining a patent, will be eligible. Attorneys who prepare the issuer's Exchange Act reports and proxy statement will be eligible whether or not these documents are incorporated into a Securities Act registration statement. However, any consultant or advisor, including an attorney, who prepares or circulates an Exchange Act report or proxy statement that is part of a promotional scheme that violates federal securities laws will not be eligible.

Attorneys serving as counsel to the issuer, its underwriters or any participating broker-dealer in a securities offering will not be eligible. Attorneys and other consultants who assist an issuer in identifying acquisition targets, or in structuring mergers or other acquisitions in which securities are issued as consideration, will be eligible, unless the acquisition takes a private company public, as described above.

3. Harmonization With Rule 701

Consultants and advisors also may be issued securities under Rule 701, the Securities Act exemption for offers and

[30] This test focuses on the issuer's power to make a resale happen, or to make it happen at a particular time. This test is not directed at, and is not intended to foreclose, an issuer's ability to prevent resales from happening for a specified period of time, such as through traditional restrictive legends.

[31] This test will be satisfied where the issuer or its affiliates receive an economic benefit from the resale proceeds, such as when the proceeds are used to pay the issuer's operating expenses or are paid to the issuer's control persons.

[32] Section 17(b) of the Securities Act [15 U.S.C. 77q(b)] makes it unlawful to publish any communication describing a security (whether or not the publication offers the security) where the publishing party receives payment from the issuer, an underwriter or dealer, without fully disclosing that such payment has been (or will be) received and the amount paid.

[33] Rule 2–01 of Regulation S–X [17 CFR 210.2–01], and AICPA Interpretation 101–1 of Statement of Auditing Standards No. 1.

[34] The discussion of attorneys in this section refers to attorneys in law firms engaged by the issuer, not to ''in-house counsel,'' who would be employees of the issuer.

sales of securities by non-reporting companies as employee compensation. In the Proposing Release, we stated that we were considering interpreting ''consultants and advisors'' for Rule 701 purposes in the narrower manner we traditionally have interpreted these terms for Form S–8 eligibility, and requested comment about interpreting the terms consistently for both purposes. As stated in today's release adopting amendments to Rule 701,[35] we are concerned that Rule 701 also may become subject to abuse once Form S–8 is amended.[36] Accordingly, the amended Form S–8 instructions and the interpretations described above will apply equally for purposes of both regulations.[37] However, issuers may continue to use securities registered on Form S–8, or issued under Rule 701, to compensate persons who have a *de facto* employment relationship with them. Such a relationship may exist where a person not employed by a company provides the company with *bona fide* services [38] that traditionally are performed by an employee, and the compensation paid by the company for those services is the primary source of the person's earned income.[39]

4. Insurance Agents

We also asked in the Proposing Release if Form S–8 eligibility for insurance agents should continue to be limited to exclusive agents, or if non-exclusive insurance agents also should be permitted to use the form. We are persuaded that any insurance agent who derives more than 50% of his or her annual income from the issuer should be permitted to receive securities issued under Form S–8, whether or not the agency relationship is exclusive.[40] Agents who depend on the issuer for this percentage of their income are likely to possess sufficient information about the issuer whose insurance products they sell to justify reliance on the abbreviated disclosure of Form S–8. We have amended Form S–8 accordingly.[41]

B. Requirement as to Proper Securities Act Form

Securities Act Rule 401(g) provides that any registration statement or amendment is deemed filed on the proper form unless the Commission objects to the use of the form before the effective date. The rule requires the Commission and the registrant to resolve whether a filing is on the appropriate form before effectiveness. Use of the proper form is important because the disclosure requirements of different forms are tailored for the particular transactions that we designed the forms to register. In some cases, registration on a form other than the form prescribed for the specific transaction may deprive public investors of the disclosure benefits of Securities Act registration.

Because we have no opportunity to object in a timely manner to the improper use of Form S–8 and other forms that become effective immediately upon filing,[42] we proposed to amend Rule 401(g) so that all registration statements and post-effective amendments that become effective automatically upon filing would be excluded from its scope.[43] Although significant abuses in this area appear to have been limited to Form S–8, we did not limit the proposed amendment to Form S–8, in order to deter abuse involving other automatically effective forms.

We are adopting the amendment to Rule 401(g) as proposed. As a result, issuers will bear the risk of assuring that automatically effective registration statements are filed on the proper form. Where a form that is available solely for a specified purpose is used for a different type of transaction, the registration may not be valid. Where a registration statement is filed on a form that is available only for the offer and sale of securities to a class of persons other than the persons to whom the securities are actually offered and/or sold, we will, in appropriate cases, continue to assert that the securities are offered and sold in violation of Section 5.[44]

C. Remaining Proposals and Requests for Comment

To prevent the use of consultants and advisors as conduits for unregistered public offerings, we proposed to amend Part II of Form S–8 to require an issuer to name any consultants or advisors to whom securities will be sold under the registration statement, specify the number of securities to be issued to each of these persons, and describe specifically the services that each of these persons will provide to the issuer. As proposed, this information would need to be filed by post-effective amendment before the securities are sold to the consultants or advisors if the information was not available when the Form S–8 originally was filed. This proposal was designed to discourage the use of Form S–8 as a vehicle for making unregistered distributions and to permit objective verification that the services are *bona fide*, non-capital-raising and non-promotional services that legitimately may be compensated with securities registered on Form S–8.

In addition to (or as alternatives to) this proposed Part II disclosure, we requested comment:

- Whether issuers should be required to disclose Form S–8 issuances of securities to consultants in their

[35] Securities Act Release No. 33–7645 (Feb. 25, 1999) (''Rule 701 Adopting Release'').

[36] Securities issued under Rule 701 are ''restricted securities,'' as defined in Securities Act Rule 144(a)(3) [17 CFR 230.144(a)(3)]. However, 90 days after a Rule 701 issuer becomes subject to the reporting requirements of the Exchange Act, Rule 701(c)(3) lifts the Rule 144 current public information, holding period, volume and notice restrictions for non-affiliates—and the holding period restriction for affiliates—who wish to resell the securities.

[37] See Section II.D of the Rule 701 Adopting Release.

[38] These services must not be in connection with the offer or sale of securities in a capital-raising transaction, and must not directly or indirectly promote or maintain a market for the issuer's securities.

[39] See *Foundation Health Corporation* (Jul. 12, 1993), which permitted registration on Form S–8 of stock underlying benefit plan options granted to physicians employed by an affiliated professional corporation to provide medical services at the registrant's HMO, where the company had the right to require the physicians to provide medical services exclusively at the HMO.

[40] Whether an insurance agent satisfies this income test can be determined by reference to the agent's most recent income tax return.

[41] See General Instruction A.1(a)(2) to Form S–8, as revised. We also have amended Rule 701 in the same manner.

[42] Securities Act Rule 462 [17 CFR 230.462] makes the following registration statements effective immediately upon filing: (a) Rule 462(a) covers Forms S–3 and F–3 for dividend and interest reinvestment plans, and Form S–8; (b) Rule 462(b) covers registration statements filed in specified limited circumstances to increase by no more than 20% the number of shares of the same class previously registered for the same offering, and post-effective amendments to those registration statements; (c) Rule 462(c) covers post-effective amendments filed in specified limited circumstances to provide only price-related information omitted from the registration statement in reliance on Rule 430A; and (d) Rule 462(d) covers post-effective amendments filed solely to add exhibits. Where the issuer continues to meet the requirements for filing on the appropriate form, Rule 464 [17 CFR 230.464] makes effective upon filing post-effective amendments on Form S–8; Forms S–3, F–2 and F–3 relating to dividend or interest reinvestment plans; and Form S–4 [17 CFR 239.25] (if filed in reliance on General Instruction G to that form).

[43] Securities Act Rules 485(b) [17 CFR 230.485(b)] and 486(b) [17 CFR 230.486(b)] make investment company registration statements and post effective amendments effective immediately upon filing. These registration statements and post-effective amendments are not affected by the amendment to Rule 401(g).

[44] See, *e.g.*, *Sky Scientific*, cited at n. 22 above; *Spectrum*, cited at n. 11 above; *Hollywood Trenz*, cited at n. 11 above; and *Huttoe*, cited at n. 25 above.

Exchange Act reports—either in Forms 10–K and 10–Q, or on Form 8–K;[45] and

• Whether issuers should be required to file consulting and advisory contracts as exhibits to Form S–8.

We also requested comment on whether the proposed Part II disclosure would effectively combat the problem, and whether this disclosure would be unduly burdensome.

Commenters divided in their assessment of the potential effectiveness of the proposed Part II (and/or Exchange Act) disclosure proposal. While some agreed that it would have a chilling effect on the use of consultants as underwriters, others expressed skepticism that violators who are not deterred by the existing requirements would be deterred by the proposed disclosure requirements.

Most commenters suggested that the proposed disclosure could cause potential competitive harm to legitimate registrants that would outweigh the proposal's prospects for preventing abuse of Form S–8. In particular, the proposals to disclose the identity of consultants and the specific services they provide could require issuers to reveal to competitors critical information concerning their business strategy. Commenters also stated that the proposal to disclose the number of securities issued could cause issuers competitive harm by permitting competitors who seek the named consultants' services to design more attractive incentive packages.[46]

Further, commenters stated that the proposal would impose excessive burdens and costs, particularly for issuers who conduct a significant portion of their business through legitimate consultants and use securities to pay for their services, because these issuers would continually be filing post-effective amendments to make the required disclosure. Commenters opposed a requirement to file consulting contracts as exhibits because of confidentiality concerns, noting that the Commission can obtain these contracts as supplemental information upon request under Securities Act Rule 418.[47]

We do not adopt today, but instead defer for further consideration, the Part II disclosure proposal and the related comment request regarding Exchange Act disclosure of Form S–8 issuances to consultants and advisors. However, we have decided not to adopt a requirement to file all consulting and advisory contracts as exhibits to Form S–8. In announcing this decision, we remind issuers that, in the absence of an exhibit requirement, issuers remain obligated to furnish these agreements as supplemental information to the Commission staff promptly upon request under Securities Act Rule 418.[48]

Other potential amendments that we did not propose, but requested comment on, were:

• Whether the aggregate percentage of securities that may be sold to consultants and advisors on Form S–8 during the registrant's fiscal year should be limited to a particular percentage of the number of securities of the same class outstanding;

• Whether the existing requirement that the registrant certify ''that it has reasonable grounds to believe that it meets all of the requirements for filing on Form S–8'' should be expanded also to require certification that any consultant or advisor who receives securities registered on the form is not hired for capital-raising or promotional activities; and

• Whether the Form S–8 cover page should include a box that the registrant would be required to check if any of the securities registered will be offered and sold to consultants and advisors.

Commenters were divided in their assessment of these other potential amendments. Commenters representing high technology companies expressed particular concern that any ''cap'' on the amount of securities that may be issued to consultants and advisors on Form S–8 would arbitrarily interfere with companies' ability to conduct their business in the most economically efficient manner. While some commenters endorsed an expanded certification as a means of reminding issuers of their responsibility for compliance, others questioned whether it would be more effective than the existing certification requirement. Although most commenters did not object to checking a box, some questioned its usefulness. They pointed out that many plans are drafted broadly to permit issuances to consultants, but securities may not actually be issued to consultants immediately, if at all.

In the companion release issued today, we have extended the comment period on these items. We will continue to consider them while we request comment on the new proposal and new solicitations of comment set forth in the companion release. We may adopt any combination of the Part II (and/or Exchange Act) disclosure proposal, the other potential amendments described in the Proposing Release (other than a requirement to file consulting and advisory contracts as an exhibit to Form S–8), the new proposal and the new comment solicitations.

III. Transferable Options and Proxy Reporting

A. Form S–8 Availability for Family Member Transferees

1. General

We are adopting amendments to Form S–8 to make it available for the exercise of employee benefit plan stock options by an employee's family member who acquires the options from the employee through a gift or a domestic relations order. The amendments reflect the view that streamlined registration on Form S–8 should be available for these transactions, as well as transactions with employees, because of their compensatory character and access to information about the issuer flowing from the employment relationship. The eligibility standard that an issuer may use Form S–8 only if it is required to file Exchange Act reports provides a further safeguard.

These amendments also are consistent with the 1996 amendments to the rules under Section 16 of the Exchange Act.[49] In particular, the Section 16 amendments eliminated the requirement of former Rule 16b–3 that a derivative security issued under an employee benefit plan be non-transferable.[50] Another amendment simplified transfers of securities to a former spouse in divorce proceedings.[51] These changes have made the issuance of transferable options more attractive and more common.

For purposes of defining transferees eligible to exercise options on Form S–8, we proposed to define ''family member'' the same way as Exchange Act Rule 16a-1(e)[52] defines ''immediate

[45] 17 CFR 249.310, 17 CFR 249.308a, and 17 CFR 249.308, respectively.

[46] Commenters also objected that disclosure of the number of securities issued would violate legitimate consultants' privacy.

[47] 17 CFR 230.418.

[48] See Proposing Release at n. 37. Companies also must consider whether they are required to file these contracts as ''material contract'' exhibits to other filings, as required by Item 601(b)(10) of Regulations S–B and S–K. [17 CFR 228.601(b)(10) and 229.601(b)(10)].

[49] These amendments were adopted in Exchange Act Release No. 37260 (May 31, 1996) [61 FR 30376].

[50] Former Exchange Act Rule 16b–3(a)(2) provided that the exemption was not available for derivative securities that were transferable, except for transfers (i) by will or the laws of descent and distribution, or (ii) pursuant to a qualified domestic relations order as defined by the Internal Revenue Code.

[51] Exchange Act Rule 16a–12 [17 CFR 240.16a–12] makes the acquisition or disposition of equity securities through a domestic relations order exempt from both the reporting requirements of Section 16(a) and the short-swing profit recovery requirements of Section 16(b).

[52] 17 CFR 240.16a–1(e).

family.'' [53] This definition includes any child, stepchild, grandchild, parent, stepparent, grandparent, spouse, sibling, mother-in-law, father-in-law, son-in-law, daughter-in-law, brother-in-law, or sister-in-law, including adoptive relationships. In addition, the Form S–8 definition of ''family member'' as proposed included trusts for the exclusive benefit of these persons, and any other entity owned solely by these persons.[54]

As described in greater detail below, we are adopting our proposal with some modifications to expand Form S–8 availability to an employee's family members for the exercise of transferable employee benefit plan options.[55] In doing so, however, we want to emphasize that this rule change does not require any issuer to permit options to be transferred in this manner. Any decision whether to permit option transfers remains entirely at the discretion of each individual issuer.[56] We also have restated the amended instruction in plain English, so that it is easier to understand.

2. Permissible Transferees

We asked commenters whether any other relatives, such as nieces and nephews, should be added to the Form S–8 definition of ''family member,'' particularly to facilitate estate planning transactions. If so, we asked whether the same relatives should be added to the Rule 16a–1(e) ''immediate family'' definition. Amending Rule 16a–1(e) this way would result in a Section 16 insider being deemed to have an indirect pecuniary interest in securities held by these relatives if the relatives share the insider's household.[57]

Commenters responded that nieces and nephews are frequent and appropriate beneficiaries of testamentary bequests and other gifts for whom Form S–8 should be available. In contrast, commenters divided as to whether nieces and nephews should be included within ''immediate family'' for Section 16 purposes.

We are persuaded that the family relationship to an employee and the compensatory character of the transaction makes the abbreviated disclosure format of Form S–8 suitable for option exercises by nieces and nephews, as well as the other persons included in the proposed definition of ''family member.'' Accordingly, we have included nieces and nephews in the definition of ''family member'' as adopted. However, we are not persuaded that the likelihood of abusive transactions in which insiders realize indirect gains is sufficiently high to include nieces and nephews within the Rule 16a–1(e) definition of ''immediate family.'' As a result, we have not amended Rule 16a–1(e).

Commenters also expressed concern that former spouses should be included within the ''family member'' definition, particularly because a transfer under a domestic relations order typically is to a former spouse, rather than to a current spouse. We have revised the definition of ''family member'' as adopted to include former spouses. As a result, Form S–8 will be available for exercises of options transferred to a former spouse pursuant to a domestic relations order, or by gift.

Some commenters expressed other concerns that the proposed definition of ''family member'' was too narrow because it would exclude unrelated persons who are the object of the employee's generosity. Specifically, some commenters argued that no family limitation is necessary in the absence of consideration for the option's transfer. Other commenters suggested that each issuer should be permitted to craft its own definition of ''family members'' for whom Form S–8 would be available to exercise options transferred by gift.

We are not persuaded that either of these formulations is acceptable, given the history of Form S–8 abuse and the need for objective definitions of permissible offerees to deter future abuse. However, we believe that there is a legitimate need for increased flexibility to facilitate donative transfers of options to persons who are not ''family members'' as proposed. Option exercises by these persons are consistent with the compensatory, non-capital raising purposes of Form S–8. To this end, we have included ''any person sharing the employee's household (other than a tenant or employee)'' in the ''family member'' definition as adopted. Of course, it is up to the issuer to determine whether it wishes to permit transfers to these persons.

We believe that sharing the employee's household generally will provide the transferee with access to information about the issuer that flows from the employee/optionee's employment relationship. Moreover, the shared household suggests a sufficiently close relationship between the transferee and optionee to presume that the transfer is a *bona fide* gift,[58] and not effected as a ruse to evade the registration requirements of the Securities Act.

As proposed, Form S–8 would be available to the ''family member'' of any person who satisfies the Form S–8 definition of ''employee,'' including consultants and advisors. We are persuaded that consultants and advisors should be treated the same as traditional employees for this purpose, as they are for other purposes under Form S–8. In particular, the amendments directed at deterring consultant abuses that we adopt and propose today should relieve concerns that equal treatment for family members of consultants or advisors is not appropriate.

We requested comment whether trusts that are primarily—rather than solely—for the benefit of family members, and entities that are primarily—rather than solely—owned by family members should be included within the Form S–8 ''family member'' definition. Commenters responded that the wide range of possible estate planning structures providing for remote or contingent interests requires a more flexible standard than exclusive benefit or sole ownership.

We are persuaded that entities in which family members (or the employee) own more than 50 percent of the voting interests and trusts in which family members have a more than 50 percent beneficial interest should be included within the ''family member'' definition. Where more than 50 percent of an entity's voting interests are owned by family members or the employee, the employee's family retains control over the entity's assets. Where family members have a more than 50 percent beneficial interest in a trust, the donative purpose of the trust is

[53] Rule 16a–1(a)(2)(ii)(A) [17 CFR 240.16a–1(a)(2)(ii)(A)] provides that a Section 16 insider has an indirect pecuniary interest in securities held by members of the insider's immediate family (as defined in Rule 16a–1(e)) sharing the same household.

[54] Rule 16a–1(e) does not include these entities. Instead, whether an insider has a pecuniary interest in securities held by a trust or other entity is determined by reference to Rules 16a–8(b) [17 CFR 240.16a–8(b)] and 16a–1(a)(2), respectively.

[55] Because option exercises by an employee's family member transferees will be permitted on Form S–8, these exercises also will be allowed on a ''cashless exercise'' basis pursuant to Federal Reserve System Regulation T. *See* 12 CFR 220.3(e)(4).

[56] In making this decision, we believe that issuers will consider, among other things, Rev. Rul. 98–21, which states that the transfer of an unvested option is not a completed gift for gift tax purposes until vesting has occurred. 1998–18 I.R.B. 7 (May 4, 1998). Typically, this means that the gift will not be complete until the employee has performed additional service for the issuer. Issuers also may consider Rev. Proc. 98–34, which provides a safe harbor for valuing options. 1998–18 I.R.B. 15 (May 4, 1998).

[57] Rule 16a–1(a)(2)(ii)(A).

[58] In addition, when the transferee exercises the option, the employee/optionee will recognize taxable income equal to the excess of the fair market value of the underlying stock over the exercise price. Treas. Reg. 1.83–7(a). At that time, the employer will be entitled to deduct the same amount. Treas. Reg. 1.83–6(a).

primarily for the benefit of the employee's family. The theories of compensatory purpose and access to information make Form S–8 equally appropriate for option exercises by these entities and trusts.

Regarding the entity standard, we are not specifying any particular type of entity, such as a general partnership, that must be used. Any type of entity will qualify as long as it meets the more than 50 percent of the voting interests ownership test. This approach should foster flexibility in estate planning. For example, this standard will permit Form S–8 to be used by family-controlled partnerships, corporations and limited liability corporations. Of course, sales by these entities of the securities received upon exercising the options must qualify for an exemption or be registered under the Securities Act.[59]

We have provided a separate test for foundations, which usually are organized either as corporations or trusts, because anomalous attributes of foundations make the general tests for trusts and other entities not suitable. Because the corporate form generally used by foundations involves a ''membership'' structure rather than a stock structure, the entity test will not be available. Foundations organized as trusts typically will not satisfy the trust test because the beneficial interest will be primarily charitable. Nevertheless, family control of the assets held by foundations, whether formed as trusts or corporations, justifies making Form S–8 equally available for option exercises by these entities. Accordingly, we have included in the definition of ''family member'' a foundation in which family members (or the employee) control the management of assets.[60]

In contrast, theories relying on primary family ownership, control or benefit do not support expanding Form S–8 availability for option exercises by other entities, such as Section 501(c)(3)[61] charities. Some commenters requested that Form S–8 be made available for exercises of employee benefit plan options transferred by gift to charities. These commenters believed that facilitating transfers to charities would be consistent with the purposes of Form S–8 because option exercises by charities would not raise concerns about use of the form for capital-raising.

We are not persuaded by this argument. Although an option exercise by a Section 501(c)(3) charity, for example, may not abuse Form S–8 for capital-raising purposes, the charity is not likely to have a pre-existing relationship with the issuer that would justify use of the abbreviated Form S–8 disclosure. While we seek to facilitate employees' estate planning through the amendments we adopt today, we must keep in mind that investor protection is our primary objective. To permit entities that are not controlled by, or for the primary benefit of, an employee's family members to exercise options on Form S–8 would suggest that the abbreviated Form S–8 disclosure is adequate for the offer and sale of securities to non-employees generally. As discussed above,[62] we remain firmly persuaded of the contrary view.

3. Permissible Transfers

As proposed, Form S–8 would be available only if the option is transferred by gift or under a domestic relations order. We believe it is not consistent with the purpose of Form S–8 to allow the form to be used for option exercises when the option is sold by the employee to another party. Accordingly, we have provided that Form S–8 will not be available for the exercise of employee benefit options transferred for value.

We have modified the amendment as adopted to clarify that:

- Form S–8 is not available for the exercise of options transferred for value;
- A transfer under a domestic relations order in settlement of marital property rights is not a prohibited transfer for value; and
- A transfer to an entity more than fifty percent owned by the optionee's family members in exchange for an interest (such as a limited partnership interest) in that entity is not a prohibited transfer for value.

As proposed, a family member transferee would not be required to receive the option directly from the employee for Form S–8 to be available. Instead, a subsequent transferee who is a ''family member'' would be able to exercise the option on Form S–8, if he or she received the option by gift or through a domestic relations order from another ''family member'' of the employee.

Commenters responded favorably to this proposal, noting that it would facilitate estate planning by the direct transferee family member, as well as the employee/optionee. Commenters also stated that issuers should be able to decide for themselves whether the recordkeeping requirements that would flow from permitting subsequent transfers are too burdensome.

We believe that Form S–8 should be equally available to indirect family member transferees, as long as each transfer of the option is from another family member of the employee/optionee, and either by gift or pursuant to a domestic relations order. Whether the transfer is a direct one from the employee/optionee, or indirect through another ''family member,'' the family member transferee will have a sufficient preexisting relationship with the issuer to justify reliance on the abbreviated Form S–8 disclosure. Of course, by making Form S–8 available to these indirect transferees, we are not in any way requiring issuers to permit indirect option transfers. This decision, like the decision to permit any option transfers, remains entirely at the discretion of each issuer.

We requested comment whether Form S–8 should be available for ''reload'' options[63] issued directly to family members, following their exercise of transferred employee benefit plan options. Commenters stated that although option plans typically permit the award of options only to employees, consultants and advisors, situations may arise where an issuer decides to authorize the issuance of reload options directly to transferees. Commenters supported Form S–8 availability to family member transferees for reload options issued directly to the transferees.

We believe that the preexisting relationship with the issuer, by virtue of the transferee's membership in the employee/optionee's family, that justifies the adequacy of abbreviated Form S–8 disclosure for the transferee's exercise of the original option applies equally to a reload option. As a result, the amendment will permit the use of Form S–8 for the exercise by family member transferees of reload options that the issuer issues directly to those transferees.

4. Permitted Transactions by Transferees

Under the amendment, family member transferees will be treated like employees for all purposes under Form S–8. We have expanded General Instruction A.1(a)(5) to specify resale of the securities underlying transferred

[59] As discussed in Section II.A.1 above, the resale exemption of Securities Act Section 4(1) is not available for any person who acts as an underwriter by taking securities from the issuer with a view to their distribution. You also will need to consider whether a ''family member'' is an ''affiliate,'' as defined in Securities Act Rule 144(a)(1) [17 CFR 230.144(a)(1)].

[60] We presume that persons who control the foundation's assets would decide whether and when an option is exercised.

[61] 26 U.S.C. 501(c)(3).

[62] See Section II.A.1, above.

[63] ''Reload'' options generally are replacement options granted upon the exercise of an earlier-granted option.

options as a transaction for which Form S–8 will be available to an employee's ''family member.'' This revision clarifies our intent that under General Instruction C to Form S–8, the Form S–3 resale prospectus[64] will be available for:

- The resale by a ''family member'' who is an affiliate of the issuer of securities that were registered on the Form S–8; and
- The resale by a ''family member'' of restricted securities acquired upon the exercise of transferred employee benefit plan options before the Form S–8 was filed.

Similarly, if the employee/optionee leaves the company before or after the option transfer, Form S–8 will remain available to the ''family member'' for option exercises to the same extent as the form is available to a former employee, including a former consultant.

Consistent with current staff interpretive positions, registration of shares underlying employee benefit plan options will continue to be permitted at any time before the option is exercised, without regard to when the option becomes exercisable.[65] This position is a departure from the general requirement that a registration statement must be filed before an option becomes exercisable—the time at which an offer of the underlying security is deemed made—if the exercise will be registered. We have historically based this exception from the general requirement on a policy determination that transactions registered on Form S–8 should be allowed more flexibility because of the unique character of the employee/employer relationship and the compensatory purpose involved.

5. Prospectus Delivery and Disclosure of Tax Effects

The Proposing Release did not address prospectus delivery standards that should apply to option exercises by employees' family members, or whether the Form S–8 prospectus materials should disclose material estate and gift tax consequences of option transfers. However, commenters requested that we provide guidance on these issues. We agree that the applicable requirements should be made clear.

As to prospectus[66] delivery generally, we want to clarify that:

- An employee transferor will not be required to provide a prospectus to the family member transferee in connection with a transfer by gift or pursuant to a domestic relations order; but
- Existing prospectus delivery requirements that apply to employee optionees will apply equally to family member transferees. Accordingly, the issuer will be required to deliver a prospectus, updated to reflect material changes, to the family member transferee at or before the transferee's exercise of the option.

Commenters also requested guidance as to on-going requirements to deliver updated prospectus materials to transferees. The same standards would apply as for an employee/optionee:

- The information delivered as a Form S–8 prospectus must be updated in writing in a timely manner to reflect any material changes during any period in which offers or sales are being made.[67]
- For plan participants, including option transferees, who already received a prospectus from the issuer, the issuer needs to furnish only the updating material.
- However, the issuer must deliver the basic prospectus as well as all updates to new plan participants, including option transferees. For option transferees, the issuer will provide the basic prospectus at the time of the update rather than the time the employee transfers the option.

Regarding shareholder communications, an issuer must furnish to all employees participating in a stock option plan (and their transferees) who do not otherwise receive this information all shareholder communications and other reports furnished to shareholders on a continuing basis.[68]

As to the tax consequences of an option transfer, the Form S–8 prospectus materials must describe ''the tax effects that may accrue to employees as a result of plan participation.''[69] If the Form S–8 registers options issued under an employee benefit plan[70] that permits the options to be transferred, this discussion should address the material estate and gift tax consequences to an employee/optionee of an option transfer.

B. Technical Change to Form S–8 to Allow Registration of Shares Underlying Transferable Options

To permit family member transferees to exercise employee benefit plan options, Form S–8 must be available for the registration of shares to be issued upon exercise of *transferable* options. Current General Instruction A.1(a) to Form S–8 makes the form available to former employees, and guardians and executors of both current and former employees (collectively, ''former employees''),[71] for the exercise of *non-transferable* employee benefit plan stock options and the subsequent sale of the underlying securities, if these exercises and sales are not prohibited under the plan.[72]

We proposed to eliminate this non-transferability restriction in its entirety, but requested comment whether the restriction should be lifted only for options that may be transferred to ''family members'' by gift or through a domestic relations order.

In the interest of providing issuers flexibility and simplifying option plan administration, we are adopting this amendment as proposed. As a result, employee benefit plan options that are transferable to anyone may be registered on Form S–8, but may be exercised on Form S–8 only by employees and their

[64] As part of the Securities Act Reform Release (Securities Act Release No. 7606A (Nov. 13, 1998) [63 FR 67174]), we have proposed a new approach to the registration of resale transactions that would eliminate Form S–3 resale prospectuses entirely, including the Form S–3 resale prospectus provided by General Instruction C to Form S–8. However, the Securities Act Reform Release requests comment whether there are compelling reasons to retain a different resale treatment for employee benefit plan securities that would not apply in other resale contexts. That release does not propose to rescind Form S–8. *See* Securities Act Reform Release at Section V.A.2.h.

[65] See *Division of Corporation Finance Manual of Publicly Available Telephone Interpretations* (July 1997), at Section G (Securities Act Forms), Interpretation No. 61.

[66] Instead of disseminating a customary prospectus included in a registration statement, Form S–8 issuers fulfill prospectus delivery obligations by providing plan participants: (1) document(s) containing the plan information required by the form (updated as necessary); and (2) a written statement listing the documents incorporated by reference and advising participants of their availability upon request. Under Securities Act Rule 428(a)(1) [17 CFR 230.428(a)(1)], the delivered documents and the documents incorporated by reference constitute a prospectus meeting the requirements of Securities Act Section 10(a) [15 U.S.C. 77j(a)].

[67] Rule 428(b)(1)(i). Company information is updated through incorporation by reference to the company's Exchange Act reports and other documents, which the company must make available without charge. *See* Part I, Item 2 of Form S–8.

[68] Rule 428(b)(5).

[69] Part I, Item 1(f) of Form S–8.

[70] As defined in Securities Act Rule 405, ''employee benefit plan'' includes written compensation contracts in addition to traditional plans.

[71] Instruction A.1(a) also makes Form S–8 available to former employees for the acquisition of registrant securities through intra-plan transfers among plan funds, to the extent permitted by the specific plan.

[72] By its terms, this non-transferability restriction applies only to the exercise of options by former employees. However, issuers often apply it to all Form S–8 optionees, particularly because of the practical difficulties of replacing options when current employees become former employees.

family members, as defined in the form.[73]

C. Registration on Form S–3 of Shares Underlying Transferable Warrants or Options

General Instruction I.B.4 to Form S–3 allows issuers to register on Form S–3 the offer and sale of securities to be received upon the exercise of outstanding transferable warrants issued by the same issuer.[74] As a condition to Form S–3 availability, the Instruction requires that the issuer have sent, within the twelve calendar months before the Form S–3 is filed, specified annual report information to all record holders of the transferable warrants.[75]

By interpretation, the staff of the Division of Corporation Finance expressed the view that employee benefit plan options transferred by gift from employees to their immediate family members would be considered ''transferable warrants'' for purposes of Instruction I.B.4.[76] Upon effectiveness of the amendments adopted today to permit employees' family members to exercise employee benefit plan options on Form S–8, there will be no further need to rely on this interpretation.[77]

However, upon considering this interpretation, we proposed to treat options (including options not issued under employee benefit plans) the same as warrants for purposes of Form S–3 availability, in each case without regard to transferability. Commenters were asked to address whether transferability, or differences between an issuer's relationships with option holders and warrant holders, would justify different treatment of the underlying securities for purposes of Form S–3 availability. This issue generated virtually no comment.

Securities offered pursuant to options, like securities offered pursuant to rights, convertible securities and warrants, are all offered to existing security holders of the issuer, who are presumed to ''follow'' the issuer through corporate communications and Exchange Act filings.[78] This presumption appears to apply equally to options as well as warrants, in each case without regard to transferability. Accordingly, we are adopting the amendment in the form proposed.

D. Executive Compensation Disclosure of Transferred Options

The Proposing Release proposed amendments to (and solicited comment on other potential amendments to) the executive compensation disclosure requirements of Item 402 of Regulations S–K and S–B[79] to address the reporting treatment of transferred (or transferable) employee benefit plan stock options. These issues arose under the summary compensation table,[80] the option/SAR grants table,[81] and the aggregated option/SAR exercises and fiscal year-end option/SAR value table.[82] The amendments adopted today reflect the staff's view that the transfer of an option by an executive does not negate the option's status as compensation that should be reported.

1. Summary Compensation Table

The summary compensation table prescribed by Item 402(b) requires a three-year reporting history of compensation, including the number of securities for which options were granted, for each person serving as the issuer's chief executive officer (the ''CEO'') during the last fiscal year and the four other most highly compensated executive officers serving at the end of that year (together with the CEO, the ''named executive officers''). We proposed to amend this item so that the sum of the number of securities underlying stock options granted required to be reported in column (g) of the table would include options that subsequently were transferred by the named executive officer.

Commenters considered this proposal appropriate, noting that the compensatory character of the securities reported is not changed if the named executive officer subsequently transfers them. We are adopting this amendment without modification.[83]

Consistent with the theory that an option retains its compensatory character following transfer, the staff of the Division of Corporation Finance is of the view that reload options issued directly to transferees also should be reported in Item 402 disclosure as new grants, both in the summary compensation table and the option/SAR grants table.

2. Option/SAR Grants Table

Among other things, this table must show the number of options granted during the most recent fiscal year to the named executive officers. The table also must provide footnote disclosure of the material terms of those options. We proposed to amend this item so that the information required by the table would apply to all options and SARs granted during the year, including options and SARs that subsequently were transferred.

Consistent with their reaction to the parallel amendment to the summary compensation table, commenters also considered this amendment appropriate. We are adopting this amendment in the form proposed.[84]

In the Proposing Release, we expressed our view that transferability is an option term that should be disclosed in a footnote to this table. While we did not propose a specific amendment to codify this position, we solicited comment whether the item should be amended to include transferability among the material terms requiring footnote disclosure.[85] Commenters generally did not agree that

[73] Issuers no longer will need to rely on the staff's interpretive position in *Merrill Lynch & Co., Inc.* (May 16, 1996), which permitted former employees to exercise on Form S–8 options transferable only to children, step-children, grandchildren or trusts established for their exclusive benefit, if such options had not been transferred by the original grantees.

[74] Instruction I.B.4 also makes Form S–3 available to register securities offered upon exercise of outstanding rights granted by the same issuer, under dividend or interest reinvestment plans, or upon the conversion of outstanding convertible securities. In each case, these securities may be registered on Form S–3 whether or not the issuer satisfies the $75 million public float test applicable to primary offerings under Instruction I.B.1 to Form S–3.

[75] The Instruction refers to the information required by Exchange Act Rule 14a–3(b) and Regulation S–K Items 401 (Directors, Executive Officers, Promoters and Control Persons), 402 (Executive Compensation) and 403 (Security Ownership of Certain Beneficial Owners and Management).

[76] *Use of Form S–3 for Transferred Options* (Aug. 7, 1997). This interpretation applied the definition of ''immediate family'' set forth in Exchange Act Rule 16a–1(e).

[77] However, registrants may continue to rely on a related letter, *Ropes & Gray* (Oct. 30, 1997), which distinguishes procedures for fee transfers in other circumstances. This letter provides generally that a post-effective amendment to the original registration statement (other than a Form S–8) is not necessary to deregister the unsold shares for which the transferred fee originally was paid.

[78] *See* Securities Act Release No. 6331 (Aug. 6, 1981). *See also* the proposed treatment of offerings to existing security holders, including option holders, in Section V.A.2.c of the Securities Act Reform Release.

[79] An issuer must include, or incorporate by reference, this disclosure in Securities Act registration statements filed on Forms S–1 [17 CFR 239.11], S–2, S–3, S–4, S–8, S–11 [17 CFR 239.18] and SB–2 [17 CFR 239.10]. An issuer also must include this disclosure in its Exchange Act registration statement on Form 10 or Form 10–SB [together, 17 CFR 249.210], and its proxy or information statement (if action is to be taken as to the election of directors or the approval of specified director or executive compensation, as provided in Item 8 of Schedule 14A [17 CFR 240.14a–101]). Finally, an issuer must include, or incorporate by reference from its definitive proxy or information statement, this disclosure in its annual report on Form 10–K [17 CFR 249.310] or Form 10–KSB [17 CFR 249.310b].

[80] Item 402(b) of Regulations S–B and S–K.

[81] Item 402(c) of Regulations S–B and S–K.

[82] Item 402(d) of Regulations S–B and S–K.

[83] Revised Item 402(b)(2)(iv)(B).

[84] Revised Item 402(c)(1).

[85] Instruction 3 to Item 402(c) lists the material terms requiring footnote disclosure.

transferability is a material option term that should require footnote disclosure in the option/SAR grant table. In particular, commenters expressed the view that, over time, transferability may become a standard feature of options granted to executives.

We believe that transferability should continue to be disclosed in a footnote to this table, since it is not currently a feature of most options, and may be viewed as a special benefit to the employee receiving the option. We are not, however, amending this item to codify a requirement to disclose option transferability in a footnote, since in the future transferability may become a standard option feature.

We also requested comment whether footnote disclosure should be required to specify the date of any transfer of an option or SAR that has occurred. While some commenters supported this disclosure (and parallel footnote disclosure in the summary compensation table), they did not believe that naming the transferee would provide material information to investors. While some commenters favored disclosing the transferee's status, such as ''immediate family member'' or ''unaffiliated charity,'' others objected to this disclosure, noting that named executive officers are not required to disclose transfers of other elements of their compensation, such as cash or stock.

We have concluded that the summary compensation table and option/SAR grants table should not be amended to require footnote disclosure of subsequent transfers, although such disclosure may be included on a voluntary basis. The purpose of these tables is to disclose the compensation awarded to the named executive officers. While clarification that an award must be reported even if subsequently transferred furthers this purpose, disclosure of an award's subsequent transfer does not. This is because the gain on the exercise of the transferred options, as discussed below, continues to be imputed to the named executive officer for Item 402 disclosure purposes.

3. Aggregated Option/SAR Exercises and Fiscal Year-End Option/SAR Value Table

This table must present, among other things, both the option exercises by the named executive officers during the last fiscal year and the value of options held by them at fiscal year end. This value is computed based on the difference between the exercise price of the options and the year-end fair market value of the covered shares.

Without proposing a specific amendment, we solicited comment whether it is necessary to amend this table so that it includes all option and SAR compensation from which the named executive officer's family members continue to derive benefits. We wanted to know whether such an amendment is needed to ensure that investors continue to receive meaningful disclosure of all option and SAR compensation awarded by the issuer, especially if option and SAR transfers to family members become more common following adoption of our amendments to Form S–8.

We do not adopt any amendment to this table today. We intend to conduct a general review of the Item 402 disclosure scheme for purposes of evaluating the need for further amendments, and will consider further the comments responsive to the Proposing Release concerning this table in connection with that review.

In the meantime, the staff of the Division of Corporation Finance continues to answer interpretive questions concerning this table. In the staff's view, a named executive officer is presumed to continue to have a compensatory interest in an option or SAR following its transfer. As a result, an issuer should continue to report in this table options and SARs held or exercised by transferees of named executive officers. Issuers may, but are not required to, include a footnote indicating that the option or SAR is held or was exercised by a transferee.

IV. Transition

The amendments adopted today become effective April 7, 1999 (the ''effective date''), except that currently effective registration statements will be required to comply with certain amendments as of May 10, 1999, as discussed below.

The amendment to Rule 401(g) will apply to all Forms S–8 and other automatically effective registration statements filed on or after the effective date, and all post-effective amendments to those registration statements (including Securities Act Section 10(a)(3)[86] updates accomplished through incorporation by reference of the registrant's Form 10–K) filed on or after the effective date.[87]

The amendments to Form S–8 and Rule 405 restricting permissible consultants will apply to Forms S–8 filed initially on or after the effective date. However, currently effective registration statements on Form S–8 will be required to comply with these amendments as of May 10, 1999. As a result, any securities issuance on or after May 10, 1999 under any currently effective Form S–8 must comply with these amendments.

The amendments that allow Form S–8 to be used by employees' family members for the exercise of employee benefit plan options transferred by gift or pursuant to a domestic relations order will apply automatically, as of the effective date, to any Form S–8 registering shares underlying employee benefit plan options, even if the Form S–8 became effective before the effective date. It will not be necessary to post-effectively amend these forms for this amendment to apply.

The amendments to Form S–3 apply to registration statements filed initially on or after the effective date, and to pre-effective amendments filed on or after that date.

The amendments to Item 402 of Regulations S–K and S–B apply to all Securities Act and Exchange Act documents that include this disclosure filed initially on or after the effective date. Amendments to documents that initially were filed before the effective date need not include the new required disclosure. For example, if preliminary proxy material containing Item 402 disclosure was filed before the effective date, definitive material filed after the effective date need not comply.

V. Cost-Benefit Analysis

As an aid to evaluate the costs and benefits of our proposals, we requested the views of the public and other supporting information. We received no comments in response to these requests. We have concluded that the amendments will not result in an increase in costs or prices for consumers or individual industries, or significant adverse effects on competition, employment, investment, productivity, innovation or small business.

Some of the amendments are designed to deter the use of Form S–8 to register transactions in which consultants or employees act as conduits to distribute securities to the public, or transactions in which consultants are compensated for other capital-raising or promotional services. This will discourage filers from misusing the form to register transactions for which it is not available. We believe that the elimination of this misuse will benefit investors and enhance their confidence in the integrity of the securities markets.

[86] 15 U.S.C. 77j(a)(3).

[87] Securities Act Rule 401(b) [17 CFR 230.401(b)] generally requires an amendment filed for purposes of satisfying Section 10(a)(3) to conform to the applicable rules and forms in effect on the amendment's filing date.

Other forms remain available to register securities for these purposes. The forms most likely to be used are Forms S–1, SB–2, S–2 and S–3. The estimated burden hours for using Form S–8 are 12 hours.[88] The estimated burden hours[89] for the other forms are:
Form SB–2—138
Form S–3—398
Form S–2—470
Form S–1—1290

Because none of these forms becomes effective automatically upon filing, unlike Form S–8, additional costs may be incurred due to the resultant delay. However, we believe that any additional costs of using these other forms are justified in order to provide adequate information to investors.

Our records indicate that approximately 5600 Forms S–8 were filed during the fiscal year ending September 30, 1998.[90] We do not have data to determine how many of these filings would have been precluded if the amendments had been in effect. Therefore, we cannot quantify the impact. However, we believe that the rule change will only impact transactions that were not intended to be registered on the form.

The amendment to make Form S–8 available for employee benefit plan option exercises and the subsequent resale of the underlying securities by an employee's family members will reduce costs by eliminating the need to file a different, less streamlined registration form for these transactions. By reducing these costs for issuers, option transferability may become more widespread, allowing families to incur estate tax savings as a result. Because information on intrafamily transfers is not reported and option transferability is a relatively new and limited practice, we do not have data upon which to quantify costs that will be saved by the amendments.

The amendment to make Form S–3 available for the exercise of options to the same extent as it is available for the exercise of warrants also will reduce costs by making this streamlined registration form available for a broader group of transactions. However, we do not have data for quantifying this effect. The amendments to Item 402 of Regulation S–B and S–K also will not increase costs because they will not require the reporting of any compensatory transactions that are not already required to be reported.

VI. Summary of Final Regulatory Flexibility Analysis

In accordance with 5 U.S.C. 604, we have prepared a final Regulatory Flexibility Analysis (''FRFA'') regarding the proposed amendments.

The analysis notes that the amendments to Form S–8 and Rules 401 and 405 are designed to deter abusive practices in which Form S–8 is used to make capital-raising distributions of securities to the general public, or to compensate consultants and advisors for promotional and other capital-raising activities. These uses are contrary to the express purposes of the form. Other amendments to Form S–8 and to Item 402 of Regulations S–B and S–K result from concerns expressed by representatives of industry that the current limited scope of persons permitted to exercise options under Form S–8 has a chilling effect on intra-family transfers for estate planning and other purposes. The amendments to Form S–3 result from the staff's view that shares underlying options should be treated the same as shares underlying warrants for purposes of form availability. We believe that the amendments will not result in any impairment of protection for the investing public, and should result in improved protection by assuring that capital-raising offerings are registered on the forms prescribed for those offerings.

As the FRFA describes, the staff is aware of approximately 815 Exchange Act reporting companies that currently satisfy the definition of ''small business'' under Rule 157 of the Securities Act.[91] Overall, 13,577 companies are Exchange Act reporting companies. Based on a random sample of the Forms S–8 filed during fiscal 1998, the Commission estimates that approximately 380 of the 5600 Forms S–8 filed during 1998 were filed by small business issuers, and that consultants or advisors were the sole recipients of securities registered on approximately 185 of the Forms S–8.

The amendments will not impose any new reporting, recordkeeping or compliance burdens. The amendments designed to deter the abuse of Form S–8 may require some small businesses to use less streamlined forms to register securities offerings that otherwise would have been registered on Form S–8. In most cases, however, these will be offerings for which Form S–8 was not in fact previously available.

The amendment to make Form S–8 available for employee benefit plan option exercises and the subsequent resale of the underlying securities by an employee's family members should reduce recordkeeping and compliance burdens for smaller businesses by eliminating the need to file a different, less streamlined registration form for these transactions. While we cannot quantify the number of small businesses that would be affected, the average reporting and recordkeeping burden that will be avoided by eliminating the need to file a different form could be substantially reduced.[92]

The amendment to make Form S–3 available for the exercise of options to the same extent as it is available for the exercise of warrants will further reduce recordkeeping and compliance burdens by making this streamlined registration form available for a broader group of transactions.

The amendments to Item 402 of Regulation S–B should not increase recordkeeping and compliance burdens because they will not require reporting of compensatory transactions that are not already required to be reported. Regulation S–K generally does not apply to small issuers.

As discussed more fully in the FRFA, we considered several possible significant alternatives to the amendments, to minimize effects on small entities. These included: (a) the establishment of different compliance or reporting timetables that take into account the resources available to small entities; (b) the clarification, consolidation, or simplification of compliance and reporting requirements under the rules and forms for small entities; (c) the use of performance rather than design standards; and (d) a partial or complete exemption from coverage of the rules and forms for small entities.

We invited written comments on any aspect of the Initial Regulatory Flexibility Analysis, but received no specific comments in response to our request. In particular, we sought comment on: (1) the number of small entities that would be affected by the proposed rule amendments; and (2) the determination that the proposed rule

[88] The burden hour estimates discussed in this section were developed for purposes of the Paperwork Reduction Act.

[89] The estimated burden hours for Form S–8 and Form SB–2 assume that only 25% of the total hours spent to prepare the form will be spent by company employees. These estimates assume that the remaining 75% of the total hours will be spent by hired professionals, such as attorneys or accountants. These estimates therefore do not include within the burden hours the remaining 75% of total hours, but instead account for that time as costs. The estimated burden hours for Form S–2 and S–3 do not follow this convention, but instead account for all estimated hours as burden hours.

[90] During the same period, 745 post-effective amendments were filed on Form S–8.

[91] 17 CFR 230.157.

[92] See the Paperwork Reduction Act Analysis at Section VII, below.

amendments would reduce reporting, recordkeeping and other compliance requirements for small entities. We received no comments in response to these requests. A copy of the Final Regulatory Flexibility Act Analysis may be obtained from Anne M. Krauskopf, Office of Chief Counsel, Division of Corporation Finance, Securities and Exchange Commission, 450 Fifth Street, NW, Washington, DC 20549.

VII. Paperwork Reduction Act Analysis

Our staff consulted with the Office of Management and Budget (''OMB'') and submitted the amendments as proposed for review in accordance with the Paperwork Reduction Act of 1995 (''PRA'').[93] The title to the affected information collection is: ''Form S–8.'' An agency may not conduct or sponsor, and a person is not required to respond to, a collection of information unless it displays a currently valid control number. This collection of information has been assigned OMB Control No. 3235–0066.

The amendments designed to deter the abuse of Form S–8 may require some companies to use less streamlined forms to register securities offerings that otherwise would have been registered on Form S–8. In most cases, however, these will be offerings for which Form S–8 was not in fact previously available. We estimate that this may reduce the number of registration statements filed on Form S–8 by approximately one percent.

The amendments to Form S–8 will permit the form to be used for the exercise of employee benefit plan options and the resale of the underlying securities by family members of employee optionees. By eliminating the need to file different, less streamlined registration statements for these transactions, the amendments may encourage registrants to permit intra-family transfers of employee benefit plan stock options. We believe that, to the extent registrants have filed separate registration statements for option exercises by family member transferees, the form most often used was Form S–3. The Commission is unable to estimate with certainty the number of Forms S–3 that have been filed for this purpose, but believes it to be a negligible percentage of the 3827 Forms S–3 filed during the fiscal year ending September 30, 1998. Because option transferability is a relatively new and limited practice, it is difficult to quantify burden hours that will be saved by the proposed amendments. However, by permitting family members' option exercises to be registered on the least burdensome registration form, the amendments should make transferability substantially more attractive. We estimate that this will reduce the number of registration statements filed on Form S–3 by a minimal percentage, but that this reduction will be offset by an increased number of filings on Form S–3 resulting from the amendment to General Instruction I.B.4 to Form S–3.

This amendment will make Form S–3 available for the registration of shares underlying options as well as warrants, in each case without regard to transferability. This will allow the registration of additional transactions on Form S–3, a relatively streamlined registration form. While we do not know the number of Forms S–3 filed during fiscal 1998 that were filed in reliance on this instruction, we estimate that it also was a relatively small percentage of the 3827 Forms S–3 filed.

The OMB received no comments in response to our request for comment regarding the information collection obligation.

VIII. Statutory Basis and Text of Amendments

The amendments to Securities Act Forms S–8 and S–3 and Rules 401(g) and 405 are adopted pursuant to the authority set forth in Sections 6, 7, 8, 10 and 19 of the Securities Act. The amendments to Item 402 of Regulations S–B and S–K also are adopted pursuant to Exchange Act Sections 12, 13, 14, 15 and 23.

List of Subjects in 17 CFR Parts 228, 229, 230 and 239

Reporting and recordkeeping requirements, Securities.

Text of the Amendments

In accordance with the foregoing, Title 17, Chapter II of the Code of Federal Regulations is amended as follows:

PART 228—INTEGRATED DISCLOSURE SYSTEM FOR SMALL BUSINESS ISSUERS

1. The authority citation for part 228 continues to read as follows:

Authority: 15 U.S.C. 77e, 77f, 77g, 77h, 77j, 77k, 77s, 77z–2, 77aa(25), 77aa(26), 77ddd, 77eee, 77ggg, 77hhh, 77jjj, 77nnn, 77sss, 78*l*, 78m, 78n, 78o 78u–5, 78w, 78*ll*, 80a–8, 80a–29, 80a–30, 80a–37, 80b–11, unless otherwise noted.

2. In § 228.402 paragraph (b)(2)(iv) introductory text is republished and paragraphs (b)(2)(iv)(B) and (c)(1) introductory text are revised to read as follows:

§ 228.402 (Item 402) Executive compensation.

* * * * *

(b) * * *

(2) * * *

(iv) Long-term compensation (columns (f), (g) and (h)), including:

(A) * * *

(B) The sum of the number of securities underlying stock options granted (including options that subsequently have been transferred), with or without tandem SARs, and the number of freestanding SARs (column (g)); and

* * * * *

(c) *Option/SAR grants table.* (1) The information specified in paragraph (c)(2) of this item, concerning individual grants of stock options (whether or not in tandem with SARs) and freestanding SARs (including options and SARs that subsequently have been transferred) made during the last completed fiscal year to each of the named executive officers shall be provided in the tabular format specified as follows:

* * * * *

PART 229—STANDARD INSTRUCTIONS FOR FILING FORMS UNDER SECURITIES ACT OF 1933, SECURITIES EXCHANGE ACT OF 1934 AND ENERGY POLICY AND CONSERVATION ACT OF 1975—REGULATION S–K

3. The authority citation for part 229 continues to read in part as follows:

Authority: 15 U.S.C. 77e, 77f, 77g, 77h, 77j, 77k, 77s, 77z–2, 77aa(25), 77aa(26), 77ddd, 77eee, 77ggg, 77hhh, 77iii, 77jjj, 77nnn, 77sss, 78c, 78i, 78j, 78*l*, 78m, 78n, 78o, 78u–5, 78w, 78*ll*(d), 79e, 79n, 79t, 80a–8, 80a–29, 80a–30, 80a–37, 80b–11, unless otherwise noted.

* * * * *

4. In § 229.402 paragraph (b)(2)(iv) introductory text is republished and paragraphs (b)(2)(iv)(B) and (c)(1) introductory text are revised to read as follows:

§ 229.402 (Item 402) Executive compensation.

* * * * *

(b) * * *

(2) * * *

(iv) Long-term compensation (columns (f), (g) and (h)), including:

(A) * * *

(B) The sum of the number of securities underlying stock options granted (including options that subsequently have been transferred), with or without tandem SARs, and the number of freestanding SARs (column (g)); and

* * * * *

[93] 44 U.S.C. 3501 *et seq.*

(c) *Option/SAR Grants Table.* (1) The information specified in paragraph (c)(2) of this item, concerning individual grants of stock options (whether or not in tandem with SARs) and freestanding SARs (including options and SARs that subsequently have been transferred) made during the last completed fiscal year to each of the named executive officers shall be provided in the tabular format specified as follows:

* * * * *

PART 230—GENERAL RULES AND REGULATIONS, SECURITIES ACT OF 1933

5. The authority citation for part 230 continues to read in part as follows:

Authority: 15 U.S.C. 77b, 77f, 77g, 77h, 77j, 77r, 77s, 77sss, 78c, 78d, 78*l*, 78m, 78n, 78o, 78w, 78*ll*(d), 79t, 80a–8, 80a–24, 80a–28, 80a–29, 80a–30, and 80a–37, unless otherwise noted.

* * * * *

6. By amending § 230.401 to revise paragraph (g) to read as follows:

§ 230.401 Requirements as to proper form.

* * * * *

(g) Except for registration statements and post-effective amendments that become effective automatically pursuant to §§ 230.462 and 230.464, a registration statement or any amendment thereto is deemed filed on the proper form unless the Commission objects to the form before the effective date.

7. By amending § 230.405 to revise the definition of ''Employee benefit plan'' to read as follows:

§ 230.405 Definitions of terms.

* * * * *

Employee benefit plan. The term *employee benefit plan* means any written purchase, savings, option, bonus, appreciation, profit sharing, thrift, incentive, pension or similar plan or written compensation contract solely for employees, directors, general partners, trustees (where the registrant is a business trust), officers, or consultants or advisors. However, consultants or advisors may participate in an employee benefit plan only if:

(1) They are natural persons;

(2) They provide *bona fide* services to the registrant; and

(3) The services are not in connection with the offer or sale of securities in a capital-raising transaction, and do not directly or indirectly promote or maintain a market for the registrant's securities.

* * * * *

PART 239—FORMS PRESCRIBED UNDER THE SECURITIES ACT OF 1933

8. The authority citation for part 239 continues to read in part as follows:

Authority: 15 U.S.C. 77f, 77g, 77h, 77j, 77s, 77z–2, 77sss, 78c, 78*l*, 78m, 78n, 78o(d), 78u–5, 78w(a), 78*ll*(d), 79e, 79f, 79g, 79j, 79*l*, 79m, 79n, 79q, 79t, 80a–8, 80a–24, 80a–29, 80a–30 and 80a–37, unless otherwise noted.

* * * * *

9. By amending § 239.13 to revise paragraph (b)(4) to read as follows:

§ 239.13 Form S–3, for registration under the Securities Act of 1933 of securities of certain issuers offered pursuant to certain types of transactions.

* * * * *

(b) Transaction requirements. * * *

(4) *Rights offerings, dividend or interest reinvestment plans, and conversions, warrants and options.* (i) Securities to be offered:

(A) Upon the exercise of outstanding rights granted by the issuer of the securities to be offered, if such rights are granted on a *pro rata* basis to all existing security holders of the class of securities to which the rights attach;

(B) Under a dividend or interest reinvestment plan; or

(C) Upon the conversion of outstanding convertible securities or the exercise of outstanding warrants or options issued by the issuer of the securities to be offered, or an affiliate of that issuer.

(ii) However, Form S–3 is available for registering these securities only if the issuer has sent, within the twelve calendar months immediately before the registration statement is filed, material containing the information required by § 240.14a–3(b) of this chapter under the Exchange Act to:

(A) All record holders of the rights;

(B) All participants in the plans; or

(C) All record holders of the convertible securities, warrants or options, respectively.

(iii) The issuer also must have provided, within the twelve calendar months immediately before the Form S–3 registration statement is filed, the information required by Items 401, 402 and 403 of Regulation S–K (§§ 229.401 through 229.403 of this chapter) to:

(A) Holders of rights exercisable for common stock;

(B) Holders of securities convertible into common stock; and

(C) Participants in plans that may invest in common stock, securities convertible into common stock, or warrants or options exercisable for common stock, respectively.

* * * * *

10. By amending Form S–3 (referenced in § 239.13) by revising paragraph B.4 of General Instruction I to read as follows:

Note—The text of Form S–3 does not, and this amendment will not, appear in the Code of Federal Regulations.

Form S–3 Registration Statement under the Securities Act of 1933

* * * * *

General Instructions

* * * * *

I. Eligibility Requirements for Use of Form S–3

* * * * *

B. Transaction Requirements. * * *

4. *Rights Offerings, Dividend or Interest Reinvestment Plans, and Conversions, Warrants and Options.*

(a) Securities to be offered (1) upon the exercise of outstanding rights granted by the issuer of the securities to be offered, if such rights are granted on a *pro rata* basis to all existing security holders of the class of securities to which the rights attach, (2) under a dividend or interest reinvestment plan, or (3) upon the conversion of outstanding convertible securities or the exercise of outstanding warrants or options issued by the issuer of the securities to be offered, or an affiliate of that issuer.

(b) However, Form S–3 is available for registering these securities only if the issuer has sent, within the twelve calendar months immediately before the registration statement is filed, material containing the information required by Rule 14a–3(b) (§ 240.14a–3(b) of this chapter) under the Exchange Act to:

(1) All record holders of the rights,

(2) All participants in the plans, or

(3) All record holders of the convertible securities, warrants or options, respectively.

(c) The issuer also must have provided, within the twelve calendar months immediately before the Form S–3 registration statement is filed, the information required by Items 401, 402 and 403 of Regulation S–K (§§ 229.401–229.403 of this chapter) to:

(1) Holders of rights exercisable for common stock,

(2) Holders of securities convertible into common stock, and

(3) Participants in plans that may invest in common stock, securities convertible into common stock, or warrants or options exercisable for common stock, respectively.

* * * * *

11. By amending § 239.16b to revise paragraph (a)(1) to read as follows:

§ 239.16b Form S–8, for registration under the Securities Act of 1933 of securities to be offered to employees pursuant to employee benefit plans.

* * * * *

(a) * * *

(1) Securities of the registrant to be offered to its employees or employees of its subsidiaries or parents under any employee benefit plan. The form also is available for the exercise of employee benefit plan options by an employee's family member (as defined in General Instruction A.1(a)(5) to Form S–8) who has acquired the options from the employee through a gift or a domestic relations order.

* * * * *

12. By amending Form S–8 (referenced in § 239.16b) by revising paragraph 1.(a) of General Instruction A to read as follows:

Note—The text of Form S–8 does not, and this amendment will not, appear in the Code of Federal Regulations.

Form S–8 Registration Statement Under the Securities Act of 1933

* * * * *

General Instructions

A. Rule as to Use of Form S–8.

1. * * *

(a) Securities of the registrant to be offered under any employee benefit plan to its employees or employees of its subsidiaries or parents. For purposes of this form, the term ''employee benefit plan'' is defined in Rule 405 of Regulation C (¶230.405).

(1) For purposes of this form, the term ''employee'' is defined as any employee, director, general partner, trustee (where the registrant is a business trust), officer, or consultant or advisor. Form S–8 is available for the issuance of securities to consultants or advisors only if:

(i) They are natural persons;

(ii) They provide *bona fide* services to the registrant; and

(iii) The services are not in connection with the offer or sale of securities in a capital-raising transaction, and do not directly or indirectly promote or maintain a market for the registrant's securities.

(2) In addition, the term ''employee'' includes insurance agents who are exclusive agents of the registrant, its subsidiaries or parents, or derive more than 50% of their annual income from those entities.

(3) The term *employee*s also includes former employees as well as executors, administrators or beneficiaries of the estates of deceased employees, guardians or members of a committee for incompetent former employees, or similar persons duly authorized by law to administer the estate or assets of former employees. The inclusion of all individuals described in the preceding sentence in the term ''employee'' is only to permit registration on Form S–8 of:

(i) The exercise of employee benefit plan stock options and the subsequent sale of the securities, if these exercises and sales are permitted under the terms of the plan; and

(ii) The acquisition of registrant securities pursuant to intra-plan transfers among plan funds, if these transfers are permitted under the terms of the plan.

(4) The term *registrant* as used in this Form means the company whose securities are to be offered pursuant to the plan, and also may mean the plan itself.

(5) The form also is available for the exercise of employee benefit plan options and the subsequent resale of the underlying securities by an employee's family member who has acquired the options from the employee through a gift or a domestic relations order. For purposes of this form, ''family member'' includes any child, stepchild, grandchild, parent, stepparent, grandparent, spouse, former spouse, sibling, niece, nephew, mother-in-law, father-in-law, son-in-law, daughter-in-law, brother-in-law, or sister-in-law, including adoptive relationships, any person sharing the employee's household (other than a tenant or employee), a trust in which these persons have more than fifty percent of the beneficial interest, a foundation in which these persons (or the employee) control the management of assets, and any other entity in which these persons (or the employee) own more than fifty percent of the voting interests. Form S–8 is not available for the exercise of options transferred for value. The following transactions are not prohibited transfers for value:

(i) A transfer under a domestic relations order in settlement of marital property rights; and

(ii) A transfer to an entity in which more than fifty percent of the voting interests are owned by family members (or the employee) in exchange for an interest in that entity.

* * * * *

Dated: February 25, 1999.

By the Commission.

Margaret H. McFarland,

Deputy Secretary.

[FR Doc. 99–5297 Filed 3–5–99; 8:45 am]

BILLING CODE 8010–01–P

SECURITIES AND EXCHANGE COMMISSION

17 CFR Part 239

[Release No. 33–7647; File No. S7–2–98]

RIN 3235–AG94

Registration of Securities on Form S–8

AGENCY: Securities and Exchange Commission.

ACTION: Proposed rule; Extension of comment period and further request for comment.

SUMMARY: In connection with the proposals issued on February 17, 1998, Release No. 33–7506 [63 FR 9648] (the ''Proposing Release''), the Securities and Exchange Commission (''we'' or ''Commission'') is issuing a new proposal to amend Form S–8. The new proposal is targeted to prevent the abuse of Form S–8 to register offerings to consultants and advisors who act as statutory underwriters, or to register securities issued as compensation to consultants or advisors who promote the registrant's securities. In addition, we are extending the comment period until May 7, 1999 for the proposals and requests for comment in the Proposing Release that we continue to consider.

DATES: We must receive your comments on or before May 7, 1999.

ADDRESSES: Please submit three copies of your comments to Jonathan G. Katz, Secretary, U.S. Securities and Exchange Commission, Mail Stop 6–9, 450 Fifth Street, NW, Washington, DC 20549. You also may submit comments electronically at the following e-mail address: rule-comments@sec.gov. All comment letters should refer to File Number S7–2–98; include this file number on the subject line if you use e-mail. You may inspect and copy comment letters in the public reference room at the same address. We will post electronically submitted comment letters on the Commission's Internet Web site (http://www.sec.gov).

FOR FURTHER INFORMATION CONTACT: Anne M. Krauskopf, Special Counsel, Office of Chief Counsel, Division of Corporation Finance, at (202) 942–2900.

SUPPLEMENTARY INFORMATION: Today we propose further amendments to Form S–8 [1] under the Securities Act of 1933 (''Securities Act'').[2]

I. Executive Summary and Background

In 1998, as part of our comprehensive agenda to deter registration and trading abuses, including microcap fraud,[3] we proposed various amendments to Form S–8.[4] In particular, Form S–8 has been misused to issue securities to nominal ''consultants and advisors'' who act as statutory underwriters [5] to sell the securities to the general public, and to register securities issued to stock promoters.[6]

Today, in a companion release we adopt some of the 1998 proposals that were designed to deter further misuse of the form.[7] We also propose a different amendment (the ''new proposal'') that would amend the instructions to Form S–8 to impose new qualification requirements for companies using the form. The new proposal would require, before filing a registration statement on Form S–8, that:

- Any company be timely in its Exchange Act reports [8] during the 12 calendar months and any portion of a month before the Form S–8 is filed; and
- A company formed by merger of a nonpublic company into an Exchange Act reporting company with only nominal assets at the time of the merger wait until it has filed an annual report on Form 10–K [9] or Form 10–KSB [10] containing audited financial statements reflecting the merger.

In issuing the new proposal, our specific goal is to make Form S–8 less susceptible to abuse, without imposing undue burdens on companies more likely to be operating legitimate employee benefit plans. We believe that the new proposal may be better targeted toward deterring potentially abusive situations.

We also solicit comment on whether other potential amendments, such as Exchange Act disclosure of aggregate Form S–8 sales to both consultants and employees, may prevent further abuse of Form S–8 (the ''new comment solicitations'').[11]

Finally, we extend the comment period on one of the proposals and some of the requests for comment that we issued in the 1998 proposal (together, the ''remaining proposals'').[12] We may adopt any combination of the new proposal, the remaining proposals and the new comment solicitations.

II. Registrant Eligibility Proposal

Our investigation of the misuse of Form S–8 shows that the companies involved frequently share one or more of the following characteristics:

- Failure to file Exchange Act reports, or failure to file them on a timely basis;
- ''Going public'' by means of a merger into a public ''shell'' corporation with only nominal assets; and
- Stopping Exchange Act reporting not long after using Form S–8 to make an unregistered distribution to the general public, whether or not the company is eligible to suspend or terminate its Exchange Act reporting.

We believe that tightening the eligibility standards of Form S–8 may be needed in order to deter abuse. In cases involving companies formed by merger of a non-reporting company into a public ''shell,'' a Form S–8 instruction requiring post-merger public information would have prevented misuse.[13] In other cases, a Form S–8 instruction requiring the issuer to have filed Exchange Act reports on a timely basis would have prevented misuse.[14]

Form S–8 currently permits use of the form by any company that:

- Immediately before the time of filing is subject to the requirement to

[1] 17 CFR 239.16b.

[2] 15 U.S.C. 77a *et seq.*

[3] See Securities Act Release No. 7505 (Feb. 17, 1998) [63 FR 9632], adopting amendments to Regulation S [17 CFR 230.901 *et seq.*]; Release No. 39670 (Feb. 17, 1998) [63 FR 9661] under the Securities Exchange Act of 1934 (''Exchange Act'') [15 U.S.C. 78a *et seq.*], proposing amendments to Exchange Act Rule 15c2–11 [17 CFR 240.15c2–11]; Securities Act Release No. 7541 (May 21, 1998) [63 FR 29168], proposing amendments to Securities Act Rule 504 [17 CFR 230.504]; Securities Act Release No. 7644 (Feb. 25, 1999), adopting amendments to Securities Act Rule 504; and Exchange Act Release No. 41110 (Feb. 25, 1999), reproposing amendments to Rule 15c2–11.

[4] See Securities Act Release 7506 (Feb. 17, 1998) [63 FR 9648] (the ''Proposing Release'').

[5] An ''underwriter'' is defined in Section 2(a)(11) of the Securities Act [15 U.S.C. 77b(a)(11)] to include ''any person who has purchased from an issuer with a view to, or offers or sells for an issuer in connection with, the distribution of any security, or participates or has a direct or indirect participation in any such undertaking, or participates or has a participation in the direct or indirect underwriting of any such undertaking * * *.''

[6] For a detailed discussion of Form S–8 abuses, see Securities Act Release No. 7646 (Feb. 25, 1999) (the ''Adopting Release''), at Sections I.A and II.

[7] See Adopting Release at Sections II.A and II.B. We also adopt amendments that allow Form S–8 to be used for the exercise of employee benefit plan stock options by the employee's family members who receive the options from the employee by gift or through a domestic relations order, and clarify executive compensation disclosure requirements that apply to transferred options. See Adopting Release at Section III.

[8] These reports are required by Sections 13(a) and 15(d) of the Exchange Act [15 U.S.C. 78m(a) and 15 U.S.C. 78o(d)].

[9] 17 CFR 249.310.

[10] 17 CFR 249.310b.

[11] See Section III, below.

[12] See Section IV, below.

[13] See, *e.g., In the Matter of Sky Scientific, Inc.* (''*Sky Scientific*''), Securities Act Release No. 7372, Exchange Act Release No. 38049, Accounting and Auditing Enforcement Release No. 863 (Dec. 16, 1996); and *SEC* v. *Hollywood Trenz, Inc.*, Litigation Release No. 15730, Accounting and Auditing Enforcement Release No. 1032 (May 4, 1998).

[14] See, *e.g., SEC* v. *Charles O Huttoe, et al.*, Litigation Release No. 15153 (Nov. 7, 1996); and *SEC* v. *Softpoint*, Litigation Release No. 14480, Accounting and Auditing Release No. 666 (Apr. 27, 1995).

file reports under Section 13[15] or 15(d) of the Exchange Act; and

• Has filed all reports and other materials so required during the preceding 12 months (or such shorter period as the registrant was required to file under the Exchange Act).

Under the new proposal, more stringent eligibility standards would apply to all companies. Any company filing a Form S–8 would be required to have filed its most recent Exchange Act reports on a timely basis (the ''proposed timeliness standard''), and companies formed by a merger of a non-reporting company into a public ''shell'' no longer would be able to file a Form S–8 immediately.

Under the proposed timeliness standard, in order to file a Form S–8, any company would need to:

• Be subject to the Exchange Act reporting requirements;

• Have filed all Exchange Act Section 13(a) or 15(d) reports and all other materials required to be filed during the immediately preceding 12 months (or such shorter time as the company was subject to the Exchange Act reporting requirements); and

• Have timely filed all Exchange Act Section 13(a) or 15(d) reports required to be filed during the 12 calendar months and any portion of a month immediately preceding the Form S–8 filing (or such shorter time as the company was subject to those requirements).

The first two requirements would be the same as the existing Form S–8 eligibility standard.[16] The third requirement would apply the timeliness standards of Securities Act Forms S–2 [17] and S–3 [18] to Form S–8. As with Forms S–2 and S–3, a company that uses Rule 12b–25 [19] to extend the due date for all or part of an Exchange Act report would be considered timely if the company actually filed the material within the time prescribed by that rule. Because Form S–8, like Forms S–2 and S–3, provides disclosure through incorporation by reference of Exchange Act reports, requiring those reports to be filed on a timely basis as a form eligibility condition would be appropriate.

The proposed timeliness standard would apply to certain post-effective amendments as well as new filings. When a registration statement is post-effectively amended to satisfy the updating standards of Securities Act Section 10(a)(3),[20] the form and contents of the amendment must conform to the applicable rules and forms in effect on the date it is filed.[21] With Form S–8, like Form S–3, incorporation by reference of the company's subsequently filed annual report on Form 10–K or Form 10–KSB is deemed to amend the registration statement for Section 10(a)(3) updating purposes. Accordingly, for an effective Form S–8, the proposed timeliness standard also would be triggered when an Exchange Act annual report is due, for purposes of determining whether the company may continue to use that Form S–8 to make compensatory offers and sales of securities. If the company does not timely file its Form 10–K or Form 10–KSB under the standards of the new proposal, that Form S–8 no longer would be available for purposes of making subsequent offers and sales of securities.

A stricter standard would apply to a company formed by a merger between an entity that was not subject to the Exchange Act reporting requirements at the time of the merger and an entity subject to the Exchange Act reporting requirements that had only nominal assets at the time of the merger. This type of company would not be allowed to file any registration statement on Form S–8 until it had filed an annual report on Form 10–K or Form 10–KSB containing audited financial statements reflecting the merger, even if its other Exchange Act reports were timely filed.

Because a company that ''goes public'' through a ''shell'' merger does not file a Form 10 or Form 10–SB,[22] the merged entity does not file audited financial statements until it files an Exchange Act annual report. The period before the first Exchange Act annual report is filed appears to be the most likely period for using Form S–8 to make an improper public offering, because the discipline of an audit has not yet been applied to the financial statements of the merged entity.[23] Prohibiting ''shell'' companies from using Form S–8 until such an annual report is filed will make Form S–8 unavailable during this critical period. Once the Form 10–K or 10–KSB is filed within 12 months after the formation/merger, the company would be subject to the proposed timeliness standard.

Commenters are requested to address whether the new proposal would be an effective deterrent to Form S–8 abuse. In particular, would the proposed timeliness standard deter misuse by the companies most likely to abuse Form S–8 without imposing undue burdens on companies that sponsor legitimate employee benefit plans? Many companies that file Forms S–8 also file (or are establishing eligibility to file) registration statements on Forms S–2 and S–3.[24] We do not believe that it will be difficult for these companies to satisfy the same timeliness standards for purposes of Form S–8. We also believe that imposing these timeliness standards on other companies will make the form less susceptible to abuse. However, we request your comment on whether the proposed timeliness standard would be equally effective and less burdensome if it required timely filing only of the company's annual report on Form 10–K or Form 10–KSB, rather than all Exchange Act reports.

We also are considering whether the proposed timeliness standard should apply only to some subset of public companies. Can this requirement be tailored so that it does not apply to the companies least likely to abuse Form S–8? For example, should the standard apply only to companies that do not have securities listed on a national securities exchange or admitted to trading on the NASDAQ National

[15] 15 U.S.C. 78m.

[16] The proposed language would clarify that the existing standard's reference to ''other materials required to be filed'' means the materials required by Exchange Act Sections 14(a) or 14(c) [15 U.S.C. 78n(a) and 78n(c)].

[17] See General Instruction I.C(2) to Form S–2 [17 CFR 239.12].

[18] See General Instruction I.A.3(b) to Form S–3 [17 CFR 239.13].

[19] 17 CFR 240.12b–25.

[20] 15 U.S.C. 77j(a)(3). This section states that if a registration statement is used more than nine months following its effective date, the information it contains may be no more than 16 months old.

[21] Securities Act Rule 401(b) [17 CFR 230.401(b)].

[22] 17 CFR 249.210 and 249.210b. These are the long form Exchange Act registration statements, which contain extensive business and financial information.

[23] In this regard, note that Item 3(a) of Form S–8 requires a registrant to incorporate by reference into its Form S–8 the registrant's latest annual report filed under Section 13(a) or 15(d) of the Exchange Act, or either: (1) the latest prospectus filed under Rule 424(b) [17 CFR 230.424(b)]; or (2) the registrant's effective registration statement on Form 10, 10–SB, 20–F or 40–F [17 CFR 249.210, 249.220f and 249.240f]. One of these documents (or the company's annual report under Exchange Act Rule 14a–3(b) [17 CFR 240.14a–3(b)]) also must be delivered to plan participants to satisfy Form S–8 prospectus delivery materials requirements under Rule 428(b)(2) [17 CFR 230.428(b)(2)]. These standards are designed to require incorporation by reference and delivery of a document containing audited financial statements for the registrant's latest fiscal year. The new proposal would assure that a company that ''goes public'' through a ''shell'' merger satisfies these requirements with respect to the merged entity, rather than the premerger ''shell.''

[24] Although General Instruction I.B.1 requires the aggregate market value of a company's voting and non-voting common equity held by non-affiliates to be at least $75 million for Form S–3 to be available for a primary offering, this condition need not be met in order to use Form S–3 for any other transaction for which it is available, such as secondary offerings.

Market System?[25] Alternatively, should the standard apply only to companies that do not have securities listed on the New York Stock Exchange or the American Stock Exchange, or admitted to trading on the NASDAQ National Market System? In either case, are there any particular listing requirements that would form an appropriate basis for distinguishing among different markets for this purpose?

If we impose the proposed timeliness standard on a limited basis, should its application be based on the company's size rather than the market on which the company's securities are traded? If so, should a size test be based on assets or revenues? For example, would it be appropriate to apply the proposed timeliness standard only to companies with annual revenues below $10 million? Should a revenue test be lower, such as $5 million, or higher, such as $20 or $25 million? If instead the test is based on assets, should the standard apply only to companies with assets below $50 million? Would a lower limit, such as $25 million, or a higher limit, such as $100 million, be more appropriate? Should an asset test be based on total assets, or only net tangible assets, whose value is more readily determinable and realizable?

Should a size test be based instead on the aggregate market value of the voting and non-voting common equity held by non-affiliates (the ''public float''), as reported in the company's most recently filed Form 10–K or Form 10–KSB? If so, should the proposed timeliness standard apply only to companies with a public float less than $75 million?

Would the new proposal be more effective if it required newly reporting companies, as well as companies formed by ''shell'' mergers, to postpone filing a Form S–8 for a specified period of time after becoming subject to the Exchange Act in order to establish a reporting history? For example, should we reinstate a 90-day waiting period before a newly reporting company is allowed to file a Form S–8?[26] Would a different waiting period be appropriate, either shorter (30 or 60 days or some other number) or longer (120 or 180 days or some other number)?

With respect to companies formed by ''shell'' mergers, should the new proposal instead prohibit them from using Form S–8 for a longer period of time, such as 18 months, two years, or three years? Does the ''nominal assets'' standard provide sufficient guidance? If not, should an objective benchmark be provided? What level of assets would be appropriate for this purpose? For example, should assets of $200,000 or less be considered ''nominal''? Should the ''nominal'' character of the public shell's assets be measured on an absolute basis (such as $100,000, $200,000, $500,000 or some other number), or by reference to the assets of the private company that is acquired (such as five, ten, or 25 percent of the combined assets, or some other percentage)?

Should all assets be considered for purposes of this test, or only net tangible assets? In addition—or as an alternative—should the test address whether the public shell has had continuous operations for a specified period of time? For example, Exchange Act Rule 3a51–1[27] excludes from the definition of ''penny stock'' a security of an issuer having net tangible assets in excess of $2 million, if the issuer has been in continuous operation for at least 3 years, or $5 million, if the issuer has been in continuous operation for less than three years.

Should the eligibility test for companies formed through ''shell'' mergers be measured by reference to the ''shell's'' assets at all, or only with respect to whether the ''shell'' has a business plan other than to merge with the private company? For example, Securities Act Rule 419[28] defines a ''blank check company,'' in part, as a development stage company that either has no specific business plan or purpose, or has indicated that its business plan is to merge with an unidentified company or companies.[29] Should the same test apply for Form S–8 eligibility purposes, whether or not a merger candidate is identified? If we use this test, should we eliminate the ''development stage'' provision?

The standards of the new proposal would apply to a company whether or not the company is a ''small business issuer.''[30] However, we request comment on whether the new proposal would have a disproportionate adverse effect on small business issuers. Would the new proposal discourage these issuers from going public, so that they could continue to issue securities to employees under Securities Act Rule 701?[31]

Finally, would the new proposal be more effective and less burdensome than any of the remaining proposals?[32] In particular, would the new proposal be more effective and impose fewer burdens on legitimate employee benefit plans than the proposed Form S–8 Part II disclosure of the number of securities issued to consultants, their names and the services they provide (or disclosure of the same information in the company's Exchange Act reports)? Is the new proposal better targeted at the specific problem than a limitation on the percentage of a class of securities outstanding that may be sold to consultants and advisors during the company's fiscal year?

III. Other Potential Amendments

Although we do not propose any other specific amendment today, we ask commenters to address whether any approaches other than the new proposal and the remaining proposals would help to deter Form S–8 abuse. For example, should we consider other forms of certification? As described below, one of the remaining proposals is to expand the existing Form S–8 certification to

[25] In this case, we anticipate that the proposed timeliness standard would apply to companies with securities traded in or quoted on markets such as the Pink Sheets, the OTC Bulletin Board, and the Nasdaq Small Cap market, as well as companies whose securities trade other than in an organized market, such as securities that are traded exclusively on the internet.

[26] Previously, the Form S–8 instructions required the registrant to have been subject to the Exchange Act reporting requirements for 90 days before filing a Form S–8. This requirement was eliminated in the 1990 revisions to Form S–8. See Securities Act Release No. 6867 (Jun. 6, 1990) [55 FR 23909]. In proposing this change, the Commission noted that ''[r]etention of the requirement that Form S–8 registrants be subject to Exchange Act reporting obligations would provide for current public information. Information in an effective Securities Act or Exchange Act registration statement would be available to the marketplace and the registrant would be subject to the continuous reporting system under the Exchange Act. As a result, the business and financial information regarding the registrant would be available to employees.'' Securities Act Release No. 6836 (Jun. 12, 1989) [54 FR 25936].

[27] 17 CFR 240.3a51–1.

[28] 17 CFR 230.419.

[29] Securities Act Rule 251(a)(3) [17 CFR 230.251(a)(3)] makes the Regulation A [17 CFR 230.251 *et seq.*] exemption from Securities Act registration unavailable to these companies. Similarly, Rule 504(a)(3) [17 CFR 230.504(a)(3)] makes the Rule 504 [17 CFR 230.504] exemption of Regulation D [17 CFR 230.501 *et seq.*] unavailable to these companies.

[30] This term currently is defined as a company that: (i) has revenues of less than $25,000,000; (ii) is a U.S. or Canadian issuer; (iii) is not an investment company; (iv) if a majority owned subsidiary, the parent corporation is also a small business issuer; and (v) the public float (aggregate market value of outstanding voting and non-voting common stock held by non-affiliates) does not exceed $25,000,000. See Item 10 of Regulation S–B [17 CFR 228.10] and Securities Act Rule 405 [17 CFR 230.405]. In the Securities Act Reform Release (Securities Act Release No. 7606A (Nov. 13, 1998) [63 FR 67171]), we proposed to amend the definition of ''small business issuer'' to raise the revenue threshold to $50,000,000, and to eliminate the public float test. See Securities Act Reform Release at Section V.E.2.

[31] 17 CFR 230.701. The Commission adopted amendments to Rule 701 in Securities Act Release No. 7645 (Feb. 25, 1999).

[32] The remaining proposals are described in Section IV, below.

require the company to certify that any consultant or advisor who receives securities registered on the form is not hired for capital-raising or promotional activities.

Instead, each time a company issues securities to consultants, should it be required to post-effectively amend its Form S–8 to certify that the consultants receiving the securities will not engage in these activities? Alternatively, should we require consultants and advisors who receive securities registered on Form S–8 to provide the company with certifications that they have not and will not engage in capital-raising, promotional or market maintenance activities? If this requirement is imposed, companies would be required to retain the certification for a period of time and provide it to the Commission or the staff upon request.[33] Would a three- or five-year retention period [34] be appropriate for this purpose? If not, for what period of time should this information be retained?

Instead of certification, another possibility would be to require companies to make a statement in Part II of the Form S–8 registration statement that the securities will be issued for compensatory, not capital-raising, purposes. Would this approach be an effective deterrent to abuse?

In some cases, companies have improperly filed a series of Forms S–8 to make unregistered offerings of securities to the public, distributing a significant percentage—if not most—of the company's securities in this manner.[35] One of the remaining proposals would require companies to disclose, in their Exchange Act reports, Form S–8 sales of securities to consultants and advisors.

Instead, should we require companies to provide disclosure in their quarterly and annual Exchange Act reports when aggregate issuances on Form S–8 (to both consultants *and* traditional employees) during the preceding 12 month period have exceeded a specified percentage of the number of securities of the same class outstanding? In particular, would Exchange Act disclosure of aggregate issuances to traditional employees, as well as consultants, be necessary to identify companies misusing Form S–8 to make public offerings?

If so, would ten, 15, 20 percent, or some other percentage, of outstanding securities of the same class be an appropriate threshold for requiring this disclosure? In particular, would the 15 percent of outstanding securities of the class or 15 percent of the issuer's total assets test used in Rule 701 be an appropriate threshold? Should this disclosure identify both the aggregate number of securities and options issued, and the aggregate number of employees and consultants who received them? Should issuances to employees be segregated from issuances to consultants for this purpose? If we require Exchange Act disclosure only of aggregate issuances to consultants, would one percent of the outstanding securities of the class during the preceding 12 month period be an appropriate disclosure threshold?

If an aggregate disclosure requirement is adopted, should companies be required to identify individual issuances if they exceed a particular threshold, such as one percent of the outstanding securities of the class? Should information identifying the recipients of the securities be required? Finally, do the companies that abuse Form S–8 continue to file Exchange Act reports long enough for this kind of disclosure to be meaningful?

IV. Continuing Request for Comment

During the comment period, we are extending our request for comment on the remaining proposals.[36] These are:

Proposal: Disclosure in Part II of Form S–8 of the names of any consultants or advisors who will receive securities under the registration statement, the number of securities to be issued to each of them, and the specific services that each will provide the company.

Requests for comment:

- Whether companies should be required to disclose Form S–8 sales of securities to consultants or advisors in their Exchange Act reports—either in Form 10–K and Form 10–Q,[37] or on Form 8–K; [38]
- Whether the aggregate percentage of securities that may be sold to consultants and advisors on Form S–8 during the company's fiscal year should be limited to a specified percentage of the number of securities of the same class outstanding;
- Whether the existing requirement that the company certify ''that it has reasonable grounds to believe that it meets all of the requirements for filing on Form S–8'' should be expanded also to require the company to certify that any consultant or advisor who receives securities registered on the form does not, and will not, engage in capital-raising or promotional activities; and
- Whether the Form S–8 cover page should include a box that the company would be required to check if any securities registered on the form are offered and sold to consultants and advisors.

In particular, we are considering carefully whether, to what extent and in what form, there should be additional disclosure requirements about consultants and advisors. We solicit your comment on this issue.

With respect to limiting the aggregate percentage of securities that may be sold to consultants and advisors on Form S–8 during the company's fiscal year, we previously solicited comment whether annual percentage limitations of five, ten or 15 percent of the number of securities of the same class outstanding, computed based on the company's most recent balance sheet, would be appropriate.[39] Would a higher percentage, such as 30 percent, be appropriate for this purpose? Would the 15 percent of the issuer's total assets test used in Rule 701 be an appropriate cap? Instead, should a higher percentage, such as 30, 40 or 50 percent, be applied to limit annual aggregate Form S–8 sales to employees, as well as to consultants and advisors?

We may adopt any combination of the new proposal, the remaining proposals and the new comment solicitations.

V. General Request for Comment

We request your written comment on all aspects of the new proposal, the new comment solicitations and the remaining proposals. You should address whether the new proposal, as drafted, is easy to understand and implement. In particular, would the new proposal and the new comment solicitations be less burdensome and

[33] Securities Act Rule 418 [17 CFR 230.418] requires companies to furnish information supplementally to the Commission or the staff upon request.

[34] Securities Act Rule 428(a)(2) [17 CFR 230.428(a)(2)] requires a company to keep documents that are used as part of the Form S–8 Section 10(a) prospectus (other than documents incorporated by reference) for five years after they are last used as part of that prospectus.

[35] See, *e.g., Sky Scientific,* cited at n. 13 above, in which the company conducted an unregistered distribution to the public by misusing 106 registration statements and post-effective amendments on Form S–8, distributing approximately 30 million shares of common stock.

[36] We have not republished in this release the text of the rules previously published in the Proposing Release. Please refer to Sections II.C and II.D of the Proposing Release for a full discussion of the remaining proposals. See Section II.C of the Adopting Release for a brief discussion of the comments we have received to date on the remaining proposals. A Comment Summary with respect to the Proposing Release also is available for inspection and copying in the Commission's Public Reference Room under file number S7–2–98. Comments that were submitted electronically are available on the Commission's website (http://www.sec.gov).

[37] 17 CFR 249.308a.

[38] 17 CFR 249.308.

[39] See Section II.D of the Proposing Release.

more effective in deterring Form S–8 abuse than the remaining proposals?

VI. Cost-Benefit Analysis

The new proposal is intended to eliminate misuse of Form S–8 and thus enhance investor protection. The costs and benefits of the new proposal are discussed below.[40] We request your written comment on this analysis as an aid to further evaluate the costs and benefits of the new proposal. Please provide empirical data and other factual support for your views to the extent possible.

The new proposal is designed to deter the use of Form S–8 to register transactions in which consultants or employees act as conduits to distribute securities to the public, or transactions in which consultants are compensated for other capital-raising or promotional services. We believe that this will benefit investors by permitting registration and sale of securities only when current information is available, which should inhibit fraudulent promotional schemes and will enhance investor confidence in the integrity of the securities markets. Other forms remain available to register securities for capital-raising purposes. The additional costs of using these other forms are justified in order to provide adequate information to non-employee investors.

Our records indicate that approximately 5600 Forms S–8 were filed during the fiscal year ending September 30, 1998.[41] We do not have data to determine how many of these filings would have been precluded if the amendments had been in effect. Therefore, we cannot quantify the impact. However, we believe that the rule change will impact primarily transactions that were not intended to use the form.

The new proposal will require:

- Any company using Form S–8 to be timely in its Exchange Act reports during the 12 calendar months and any portion of a month before the Form S–8 is filed; and
- A company formed by merger of a nonpublic company into an Exchange Act reporting company with only nominal assets at the time of the merger to wait until it has filed an annual report on Form 10–K or Form 10–KSB containing audited financial statements reflecting the merger before filing a registration statement on Form S–8.

Some companies may face increased costs as a result of the rule change because, for limited periods of time, Form S–8 may not be available to them to register compensatory employee benefit plan securities offerings. This could reduce the flexibility of these companies' compensation arrangements. Commenters should consider whether the new proposal would make an affected company more likely to use cash for compensation purposes. If so, would this result in cash flow concerns or constrain reinvestment in the company's business?

For all companies, the proposed timeliness standard would condition Form S–8 availability on the company's timely satisfaction of its Exchange Act reporting requirements. Form S–8 would be available if the company does no more than what it otherwise is required to do. Accordingly, the proposed timeliness standard will not require a company to incur additional costs. The proposed timeliness standard will provide investor protection benefits by giving companies an additional incentive to file their Exchange Act reports on a timely basis.

For a company formed by a ''shell'' merger, the proposed standard will make Form S–8 unavailable until the company has filed a Form 10–K or Form 10–KSB that includes audited financial statements for the merged entity. This will provide investor protection benefits by ensuring that the audited financial statements of the merged entity, rather than merely the ''shell,'' are incorporated by reference into the Form S–8. However, during the limited period that the proposed standard will apply, such a company would be required to use a less streamlined registration statement to register securities offered under a compensatory employee benefit plan. The most likely registration statement forms to be used for this purpose are Forms S–1, SB–2, S–2 and S–3. The estimated burden hours for purposes of the Paperwork Reduction Act for using Form S–8 are 12 hours. The estimated burden hours[42] for the other forms are:

Form SB–2—138
Form S–3—398
Form S–2—470
Form S–1—1290

Because none of these alternative forms becomes automatically effective upon filing, there may be additional costs due to potential delay in implementing the employee benefit plan. However, once the company files the required Form 10–K or Form 10–KSB, the company would be able to post-effectively amend the less streamlined registration statement to convert it to a Form S–8,[43] assuming the proposed general timeliness standard also is satisfied, thereby regaining the benefits of the abbreviated form.

For purposes of the Small Business Regulatory Enforcement Fairness Act of 1996 (''SBREFA''),[44] we request data and analysis on whether the new proposal would result in a major increase in costs or prices for consumers or individual industries, or significant adverse effects on competition, employment, investment, productivity, innovation or small business. Would the new proposal be likely to have a $100 million or greater annual effect on the economy? Commenters are requested to provide empirical data to support their views.

VII. Summary of Initial Regulatory Flexibility Analysis

The Commission has prepared an Initial Regulatory Flexibility Analysis (''IRFA'') in accordance with 5 U.S.C. 603 regarding the new proposal.

As noted in the analysis, the new proposal is designed to deter abusive practices in which Form S–8 is used to make capital-raising distributions of securities to the general public, or to compensate consultants and advisors for promotional and other capital-raising activities. These uses are contrary to the express purposes of the form. We believe that the new proposal will not result in any impairment of protection for the investing public, and should result in improved protection by assuring that capital-raising offerings are registered on the forms prescribed for those offerings.

As the IRFA describes, the staff is aware of approximately 815 Exchange Act reporting companies that currently satisfy the definition of ''small business'' under Rule 157 of the Securities Act.[45] Overall, 13,577 companies are Exchange Act reporting companies. Based on a random sample

[40] For a discussion of the costs and benefits of the remaining proposals, see Section V of the Proposing Release. We invite additional comments on that cost-benefits analysis also.

[41] During the same period, 745 post-effective amendments were filed on Form S–8.

[42] The estimated burden hours for Form S–8 and Form SB–2 assume that only 25% of the total hours spent to prepare the form will be spent by company employees. These estimates assume that the remaining 75% of the total hours will be spent by hired professionals, such as attorneys or accountants. These estimates therefore do not include within the burden hours the remaining 75% of total hours, but instead account for that time as costs. The estimated burden hours for Form S–2 and S–3 do not follow this convention, but instead account for all estimated hours as burden hours.

[43] See Securities Act Rule 401(e) [17 CFR 230.401(e)].

[44] Pub. L. No. 104–121, 110 Stat. 857 (1996) (codified in various sections of 5 U.S.C., 15 U.S.C., and as a note to 5 U.S.C. 601).

[45] 17 CFR 230.157.

of the Forms S–8 filed during fiscal 1998, the Commission estimates that approximately 380 of those Forms S–8 were filed by small business issuers, and that consultants or advisors were the sole recipients of securities registered on approximately 185 of the Forms S–8.

The new proposal will not impose any new reporting, recordkeeping or compliance burdens for most small issuers. However, the new proposal may require some small businesses to use less streamlined forms to register securities offerings that otherwise would have been registered on Form S–8. We believe that in many cases, however, these will be offerings for which Form S–8 was not in fact previously available. This may reduce the flexibility of the compensation arrangements for some small businesses that merge with ''shells.'' We do not have the data to estimate this effect, but note that the effect would be only for the limited time until the combined entity files a Form 10–KSB with audited financial statements that reflect the merger.

We invite your written comments on any aspect of the IRFA. In particular, we seek your comment on: (1) the number of small entities that would be affected by the proposed rule amendments; and (2) the determination that the proposed rule amendments would not significantly increase reporting, recordkeeping and other compliance requirements for small entities. Commenters should address whether the proposed amendments to Form S–8 will affect the number of registration statements filed on this form, affect the dollar amount of securities sales on this form, or affect the form's availability to small entities.

Any commenter who believes that the new proposal will significantly impact a substantial number of small entities should describe the nature of the impact and estimate the extent of the impact. For purposes of making determinations required by SBREFA, we also request data regarding the potential impact of the proposed amendments on the economy on an annual basis. All comments will be considered in the preparation of the Final Regulatory Flexibility Analysis if the new proposal is adopted. Please refer to the Proposing Release for a summary of the separate Initial Regulatory Flexibility Analysis with respect to the remaining proposals.[46] A copy of either Initial Regulatory Flexibility Analysis may be obtained from Anne M. Krauskopf, Office of Chief Counsel, Division of Corporation Finance, Securities and Exchange Commission, 450 Fifth Street, NW, Washington, DC 20549.

VIII. Paperwork Reduction Act Analysis

Parts of the new proposal contain ''collection of information'' requirements within the meaning of the Paperwork Reduction Act of 1995 (''PRA'').[47] Our staff has submitted the new proposal for review by the Office of Management and Budget (''OMB'') in accordance with the PRA. The title to the affected information collection is: ''Form S–8.'' An agency may not conduct or sponsor, and a person is not required to respond to, a collection of information unless it displays a currently valid control number.

The new proposal may require some companies to use less streamlined forms to register securities offerings that otherwise would have been registered on Form S–8. We estimate that this may reduce the number of registration statements filed on Form S–8 by approximately not more than five percent, and may increase the number of registration statements filed on different forms by a corresponding amount. In many cases, however, these will be offerings for which Form S–8 was not in fact previously available. We believe that this will provide a substantial investor protection benefit that justifies any additional costs to filers.

In accordance with 44 U.S.C. 3506(c)(2)(B), we solicit comment on the following:

- Whether the proposed changes in the collection of information are necessary to the agency's function, including practical utility;
- The accuracy of the estimated burden of the proposed changes to the collection of information;
- Whether there are ways to enhance the quality, utility and clarity of the information to be collected; and
- Whether the burden of collection of information on those who are to respond, including through the use of automated collection techniques or other forms of information technology, may be minimized.

Persons who wish to submit comments on the collection of information requirement should direct them to the Office of Management and Budget, Attention: Desk Officer for the Securities and Exchange Commission, Office of Information and Regulatory Affairs, Washington, DC, with reference to File No. S7–2–98. Because the OMB is required to make a decision concerning the collection of information between 30 and 60 days after publication, your comment is best assured of having its full effect if OMB receives it within 30 days of publication.

Please refer to the Proposing Release for a separate Paperwork Reduction Act Analysis of the remaining proposals.[48]

IX. Statutory Basis and Text of Proposed Amendments

The new amendment to Securities Act Form S–8 is proposed under the authority set forth in Sections 6, 7, 8, 10 and 19 of the Securities Act of 1933.

List of Subjects in 17 CFR Part 239

Reporting and recordkeeping requirements, Securities.

Text of the Proposed Amendments

In accordance with the foregoing, Title 17, Chapter II of the Code of Federal Regulations is proposed to be amended as follows:

PART 239—FORMS PRESCRIBED UNDER THE SECURITIES ACT OF 1933

1. The authority citation for part 239 continues to read in part as follows:

Authority: 15 U.S.C. 77f, 77g, 77h, 77j, 77s, 77z–2, 77sss, 78c, 78*l*, 78m, 78n, 78o(d), 78u–5, 78w(a), 78*ll*(d), 79e, 79f, 79g, 79j, 79*l*, 79m, 79n, 79q, 79t, 80a–8, 80a–24, 80a–29, 80a–30 and 80a–37, unless otherwise noted.

* * * * *

2. By amending § 239.16b to redesignate paragraph (b) as paragraph (c); redesignate paragraphs (a)(1) and (a)(2) as new paragraphs (b)(1) and (b)(2); revise paragraph (a); and add new paragraph (b) introductory text to read as follows:

§ 239.16b Form S–8, for registration under the Securities Act of 1933 of securities to be offered to employees pursuant to employee benefit plans.

(a) A registrant may use this form for registration under the Securities Act of 1933 (''the Act'') of the securities listed in paragraph (b) of this section if the registrant satisfies the requirements of paragraph (a)(1) and (a)(2) of this section:

(1) A registrant may not file a registration statement on this form unless, immediately before filing the registration statement, the registrant:

(i) Is subject to the reporting requirements of sections 13(a) or 15(d) of the Securities Exchange Act of 1934 (the ''Exchange Act'') (15 U.S.C. 78m(a) or 78o(d));

(ii) Has filed all reports required by Section 13(a) or 15(d) of the Exchange

[46] Section VI of the Proposing Release.

[47] 44 U.S.C. 3501 *et seq.*

[48] Section VII of the Proposing Release.

Act and all materials required by section 14(a) or 14(c) of the Exchange Act (15 U.S.C. 78n(a) or 78n(c)) required to be filed during the 12 months immediately before filing a registration statement on this form (or for such shorter period that the registrant was required to file such reports and materials); and

(iii) Has filed on a timely basis all reports required by section 13(a) or 15(d) of the Exchange Act during the 12 calendar months and any portion of a month immediately preceding the filing of the registration statement (or for such shorter period that the registrant was required to file such reports). If during that time the registrant has used § 240.12b–25 of this chapter with respect to a report or a part of a report, that material must have been filed within the time prescribed by that section.

(2) If the registrant is an entity formed by the merger between:

(i) An entity subject to the Exchange Act reporting requirements that had only nominal assets at the time of the merger; and

(ii) An entity that was not subject to the Exchange Act reporting requirements at the time of the merger, the registrant may not file a registration statement on this form until it has filed an annual report on Form 10–K or Form 10–KSB (§ 249.310 or § 249.310b of this chapter) containing audited financial statements for a fiscal year ending after consummation of the merger.

(b) A registrant may use this form for registration under the Act of the following securities:

* * * * *

3. By amending Form S–8 (referenced in § 239.16b) in General Instruction A to redesignate paragraphs 1.(a) and 1.(b) as paragraphs 1.(d) and 1.(e); revise the introductory text of paragraph 1.; and add new paragraphs 1.(a) and 1.(b) to read as follows:

Note: The text of Form S–8 does not, and this amendment will not, appear in the Code of Federal Regulations.

Form S–8 Registration Statement Under the Securities Act of 1933

* * * * *

General Instructions

A. Rule as to Use of Form S–8

1. A registrant may use this form for registration under the Securities Act of 1933 of the securities listed in paragraph 1.(d) and 1.(e) of this section if the registrant satisfies the requirements of paragraph 1.(a) and 1.(b) of this section:

(a) A registrant may not file a registration statement on this form unless, immediately before filing the registration statement, the registrant:

(i) Is subject to the reporting requirements of Sections 13(a) or 15(d) of the Securities Exchange Act of 1934 (the ''Exchange Act'') (15 U.S.C. 78m(a) or 78o(d));

(ii) Has filed all reports required by Section 13(a) or 15(d) of the Exchange Act and all materials required by Section 14(a) or 14(c) of the Exchange Act (15 U.S.C. 78n(a) or 78n(c)) required to be filed during the 12 months immediately before filing a registration statement on this form (or for such shorter period that the registrant was required to file such reports and materials); and

(iii) Has filed on a timely basis all reports required by Section 13(a) or 15(d) of the Exchange Act during the 12 calendar months and any portion of a month immediately preceding the filing of the registration statement (or for such shorter period that the registrant was required to file such reports). If during that time the registrant has used Rule 12b–25 (§ 240.12b–25 of this chapter) under the Exchange Act with respect to a report or a part of a report, that material must have been filed within the time prescribed by that rule.

(b) If the registrant is an entity formed by the merger between:

(i) An entity subject to the Exchange Act reporting requirements that had only nominal assets at the time of the merger; and

(ii) An entity that was not subject to the Exchange Act reporting requirements at the time of the merger, the registrant may not file a registration statement on this form until it has filed an annual report on Form 10–K or Form 10–KSB (§ 249.310 or § 249.310b of this chapter) containing audited financial statements for a fiscal year ending after consummation of the merger.

* * * * *

Dated: February 25, 1999.

By the Commission.

Margaret H. McFarland,

Deputy Secretary.

[FR Doc. 99–5298 Filed 3–5–99; 8:45 am]

BILLING CODE 8010–01–P

SECURITIES AND EXCHANGE COMMISSION

17 CFR Part 240

Release No. 34–41110; File No. S7–5–99

RIN 3235–AH40

Publication or Submission of Quotations Without Specified Information

AGENCY: Securities and Exchange Commission.

ACTION: Reproposed rule.

SUMMARY: The Securities and Exchange Commission is reproposing for comment amendments to Rule 15c2–11 under the Securities Exchange Act of 1934 (Exchange Act). Rule 15c2–11 governs the publication of quotations for securities in a quotation medium other than a national securities exchange or Nasdaq. Also, we are reproposing a companion amendment to relocate in Rule 17a–4 under the Exchange Act the record retention requirement currently contained in Rule 15c2–11. The original proposal was issued in February 1998 in response to concerns about increased incidents of fraud and manipulation in over-the-counter (OTC) securities, which typically involve thinly-traded securities of thinly-capitalized issuers (*i.e.*, microcap securities).

The reproposed amendments are more limited than the initial proposal and focus the Rule on those securities the Commission believes are more likely to be prone to fraud and manipulation. The reproposal is part of the Commission's continuing efforts in regulatory, inspections, enforcement, and investor education areas that are key to deterring microcap fraud.

In addition, the reproposal will increase the information that broker-dealers must review before publishing quotations for non-reporting issuers' securities, and will ease the Rule's recordkeeping requirements when broker-dealers have electronic access to information about reporting issuers. Finally, we are giving guidance to broker-dealers on the scope of the review required by the Rule and providing examples of ''red flags'' that they should look for when reviewing issuer information.

DATES: Comments must be received on or before April 7, 1999.

ADDRESSES: Comments should be submitted in triplicate to Jonathan G. Katz, Secretary, Securities and Exchange Commission, 450 Fifth Street, NW, Mail Stop 6–9, Washington, DC 20549. Comments may also be submitted

electronically at the following E-mail address: rule-comments@sec.gov. All comment letters should refer to File No. S7–5–99. All comments received will be available for public inspection and copying in the Commission's Public Reference Room, 450 Fifth Street, NW, Washington, DC 20549. Electronically submitted comment letters will be posted on the Commission's Internet website (http://www.sec.gov).

FOR FURTHER INFORMATION CONTACT: Any of the following attorneys in the Division of Market Regulation, Securities and Exchange Commission, 450 Fifth Street, NW, Mail Stop 10–1, Washington, DC 20549, at (202) 942–0772: Nancy J. Sanow, Irene A. Halpin, Florence E. Harmon, Chester A. McPherson, or Jerome J. Roche.

SUPPLEMENTARY INFORMATION:

Table of Contents

I. Executive Summary
A. Overview of the microcap fraud problem and efforts to prevent further abuses
B. Background of Rule 15c2–11 and recent proposed amendments
II. Overview of Reproposed Amendments
III. Discussion of Amendments
A. Securities excluded from the Rule
1. Securities satisfying a trading value test
2. Securities satisfying a bid price test
3. Securities of issuers satisfying a net tangible assets test
4. Non-convertible debt, non-participatory preferred stock, and asset-backed securities
5. Other Exceptions
B. Quotations subject to the Rule
1. The initial quotation for a covered OTC security
2. Priced quotations
3. Annual review
C. Information required under the Rule
1. Reporting issuers delinquent in their filings
2. Issuers in bankruptcy
a. Reporting issuers
b. Non-reporting issuers emerging from bankruptcy
3. Non-reporting foreign private issuers
4. Other non-reporting issuers
D. Information available upon request
E. Information repository
F. Definitions
G. Preservation of documents and information
H. Transition and exemptive authority provisions
I. Information submitted to the NASD
IV. General Request For Comments
V. Effects on Efficiency, Competition, and Capital Formation
VI. Costs and Benefits of the Amendments
A. Benefits
B. Costs
VII. Initial Regulatory Flexibility Act
VIII. Paperwork Reduction Act
A. Collection of information under the amendments
B. Proposed use of information
C. Respondents
D. Total annual reporting and recordkeeping burden
1. Burden-hours for broker-dealers
2. Burden-hours for issuers
3. Total burden-hour costs to broker-dealers and issuers
4. Capital cost to broker-dealers and issuers
E. General information about the collection of information
F. Request for comments
IX. Statutory Basis and Text of Proposed Amendments and Rule

Appendix

I. Introduction
II. Quotation Events Triggering the Review Requirement
III. The Review Process
A. Introduction
B. Source reliability
1. Determining whether a source is reliable
2. Examples of unreliable sources
C. Document review obligations
D. Scope of review following a trading suspension
IV. Examples of Red Flags

I. Executive Summary

A. Overview of the Microcap Fraud Problem and Efforts to Prevent Further Abuses

Because incidents of fraud and manipulation involving microcap securities are a serious concern, the Commission, along with other regulators, has made combating microcap fraud one of its top priorities. Microcap securities generally are characterized by low share prices and little or no analyst coverage.[1] The issuers of microcap securities typically are thinly-capitalized and information about them often is limited, particularly when they are not subject to the Commission's periodic disclosure requirements. Securities of microcap companies usually are quoted on the OTC Bulletin Board operated by the National Association of Securities Dealers, Inc. (NASD), or in the Pink Sheets published by the National Quotation Bureau, Inc. (NQB), but they are not exclusive to these quotation mediums.[2]

Microcap fraud often involves schemes such as ''pump and dump'' operations, in which unscrupulous brokers sell the securities of less-seasoned issuers to retail customers by using high pressure sales tactics and a supply of securities under the firm's control. The fraudsters create interest in the security by disseminating false or misleading information about the issuer through, for example, oral statements, press releases, or the Internet. To further the manipulative scheme, the retail broker frequently acts as a market maker in the security or, either on its own or through the issuer's promoter, induces other firms to act as market makers.

By publishing quotations, the market maker raises the profile of the security, even though the market maker is not an active participant in the fraud and publishes quotations solely in response to increased demand for the security. The broker, promoter, or others orchestrating the fraud can point to quotations for the security to ''validate'' its worth. The perpetrators of the fraud then dispose of their stake at an inflated price. Once they no longer need to stimulate interest in the security, the market for it collapses and innocent investors are left holding stock with little or no value.

The defrauded victims of microcap fraud activities are not the only ones harmed. When other investors become reluctant or unwilling to invest in the kinds of securities they perceive as prone to fraud, liquidity for those securities can be impaired. As a result, existing shareholders can face difficulty in disposing of their holdings and legitimate issuers of lower-priced stocks can find it hard to raise capital to start up or expand operations or services. In short, continuing incidents of microcap fraud are detrimental to the integrity of our nation's capital markets.

To combat microcap abuses, we have initiated several enforcement, examination, education, and regulatory measures. These actions include the following:

- In September 1998, we filed 13 enforcement actions against 41 defendants for their involvement in fraudulent microcap schemes that bilked investors of more than $25 million.[3]
- We conducted a nationwide sweep to combat fraud through the Internet, which resulted in 23 enforcement actions against 44 stock promoters of microcap stocks in October 1998.[4]

[1] The term *microcap securities* is not defined under the federal securities laws or regulations. The use of the term ''microcap securities'' in this release, however, should be distinguished from its use in the mutual fund context. For example, Lipper Analytical Services, a mutual fund rating organization, generally categorizes microcap companies as companies with market capitalization of less than $300 million. Lipper-Directors' Analytical Data, Investment Objective Key, 2d ed. 1997.

[2] Microcap securities can also be listed on securities exchanges or Nasdaq or quoted in alternative trading systems.

[3] For a summary of these cases, *see Fight Against Microcap Fraud ''Paying Dividends''*, Press Release No. 98–92 (September 24, 1998), available through our Internet website at <http://www.sec.gov/news/micronew.htm>.

[4] For a summary of these cases, *see Purveyors of Fraudulent Spam, Online Newsletters, Message Board Postings, and Websites Caught*, Press Release No. 98–117 (October 28, 1998), available through

Continued

• We initiated examination sweeps of several firms that are active in the microcap market. Our examination staff conducted complex and resource-intensive reviews of these firms' records for evidence of the hallmarks of microcap fraud, such as patterns of ''bait and switch'' sales techniques, misrepresentations and exaggerated claims, unauthorized trading and refusals to sell securities, market manipulation, and lax or nonexistent supervision.

• We have held numerous investors' town meetings across the country to educate people about investing wisely, and we have put together several brochures to assist investors.[5]

• We are cooperating with self-regulatory organizations (SROs) to improve supervision and regulation of the OTC securities market. For example, we recently approved NASD rule changes that limit quotations on the OTC Bulletin Board to the securities of issuers that are current in their reports filed with the Commission or other regulatory authority.[6]

• We have taken steps to strengthen our regulations and close loopholes to help reduce incidents of microcap fraud.

Today, we are taking action on several additional regulatory measures aimed at preventing further incidents of microcap fraud. In addition to adopting amendments to Form S–8[7] under the Securities Act of 1933 (Securities Act)[8] and adopting amendments to Regulation D,[9] we are reproposing amendments to Rule 15c2–11[10] under the Securities Exchange Act of 1934 (Exchange Act),[11] our rule that governs the quotations by broker-dealers for OTC securities.[12] Rule 15c2–11 is intended to prevent broker-dealers from becoming involved in the fraudulent manipulation of OTC securities. However, even if a broker-dealer technically complies with the Rule's requirements, it would be subject to liability under other antifraud provisions of the securities laws, such as Rule 10b–5, if it publishes quotations as part of a fraudulent or manipulative scheme.[13]

B. Background of Rule 15c2–11 and Recent Proposed Amendments

Rule 15c2–11 contains requirements that are intended to deter broker-dealers from initiating or resuming quotations for covered OTC securities that may facilitate a fraudulent or manipulative scheme. The Rule currently prohibits a broker-dealer from publishing (or submitting for publication) a quotation for a covered OTC security in a quotation medium unless it has obtained and reviewed current information about the issuer.[14] The broker-dealer must also have a reasonable basis for believing that the issuer information, when considered along with any supplemental information, is accurate and is from a reliable source.[15]

The Rule currently contains several exceptions to its prohibitions. Under the ''piggyback'' exception, the Rule's information requirements do not apply when a broker-dealer publishes, in an interdealer quotation system, a quotation for a covered OTC security that was already the subject of regular and frequent quotations in the same interdealer quotation system.[16] A broker-dealer is able to ''piggyback'' on either its own or other broker-dealers' previously published quotations. This exception assumes that regular and frequent quotations for a security generally reflect market supply and demand and are based on independent, informed pricing decisions. However, as a result of the piggyback provision, the Rule's application is essentially limited to just the first broker-dealer publishing quotes.

In February 1998, the Commission published for comment amendments to the Rule that were designed to curb fraud in microcap securities.[17] This proposal would have eliminated the piggyback provision by requiring all broker-dealers to review current issuer information before publishing their first quotation for a covered OTC security, without regard to whether the quotation was priced or unpriced, and to thereafter review current issuer information annually if they published priced quotations. With limited exceptions, the proposal would have applied to any security quoted in a quotation medium other than a national securities exchange or Nasdaq. The proposal would also have expanded the information required for issuers that do not file periodic reports with the Commission (*e.g.*, non-reporting issuers). In addition, broker-dealers would have been required to make the issuer information available to anyone who requested it.

In response to the Proposing Release, we received 199 comment letters from 193 commenters.[18] The majority of commenters, which included broker-dealers, issuers, attorneys, and individuals, opposed many of the proposed changes. Broker-dealers were especially concerned that they would be exposed to potential liability in civil actions as a result of their increased review obligations under the proposal. Commenters also expressed views about the possibility of: reduced liquidity in covered OTC securities if broker-dealers stopped making markets; less transparent markets if broker-dealers did not publish priced quotes to avoid the annual review requirement; less competitive pricing for covered OTC securities; impaired access to capital by

our Internet website at <http://www.sec.gov/news/netfraud.htm>.

[5] *See, e.g.*, ''Microcap Stock: A Guide for Investors'' (providing a variety of tips on how to detect and avoid microcap fraud); ''Cold Calling Alert'' (describing the cold calling rules and instructing investors how to avoid telephone scams); ''Internet Fraud'' (describing common frauds including on-line newsletter and bulletin board posting scams); and ''Ask Questions'' (listing questions that investors should ask about their investments and their investment professionals). All of these publications are available for free from our toll-free publications line at (800) 732–0330 and can be downloaded through our Internet website at <http://www.sec.gov>.

[6] Securities Exchange Act Release No. 40878 (January 4, 1999), 64 FR 1255 (OTC Bulletin Board Release).

[7] Securities Act Release No. 33–7646 (February 19, 1999). The amendments to Form S–8 restrict the use of Form S–8 for the sale of securities to consultants and advisors, among other things.

[8] 15 U.S.C. 77a *et seq.*

[9] Securities Act Release No. 33–7644 (February 19, 1999). The amendments limit the circumstances where freely tradable securities may be issued in reliance on, and general solicitation is permitted under, Rule 504 of Regulation D.

[10] 17 CFR 240.15c2–11.

[11] 15 U.S.C. 78a *et seq.*

[12] In this release, ''OTC stocks'' or *OTC securities* refers to securities that are not listed on a national securities exchange or Nasdaq. ''Covered OTC securities'' refers to those OTC securities that are subject to Rule 15c2–11. The Rule applies to securities quoted on the OTC Bulletin Board operated by the NASD, the Pink Sheets operated by the NQB, and similar quotation mediums. For further discussion of quotation mediums, *see* Part III.F. below

[13] 17 CFR 240.10b–5.

[14] Rule 15c2–11 defines *quotation* as any bid or offer at a specified price with respect to a security, or any indication of interest by a broker or dealer in receiving bids or offers from others for a security, or any indication by a broker or dealer that advertises its general interest in buying or selling a particular security. For the purposes of this release, a ''priced quotation'' is a bid or offer at a specified price.

[15] *See* Part III.C. below for a description of the required issuer and supplemental information.

[16] An *interdealer quotation system* is a quotation medium of general circulation to brokers or dealers which regularly disseminates quotations of identified brokers or dealers. 17 CFR 240.15c2–11(e)(2). Under the proposed amendments, the definition of ''interdealer quotation system'' would be incorporated into the definition of ''quotation medium.'' *See* Part III.F. below for a discussion of the term ''quotation medium.''

[17] Securities Exchange Act Release No. 39670 (February 17, 1998), 63 FR 9661 (Proposing Release).

[18] This total includes virtually identical comment letters from 68 issuers. All comment letters are available in File No. S7–3–98 at our Public Reference Room, 450 Fifth Street, NW, Washington, DC 20549. Comment letters that were submitted electronically are available through our Internet website at <http://www.sec.gov/rules/s7398.htm>.

issuers; and increased compliance costs for broker-dealers. In addition, some commenters pointed out that the proposal would not cover Nasdaq SmallCap securities, which, they noted, have also been the subject of abusive activities. Some commenters also remarked that the proposal would not stop microcap fraud, which, in their view, is really a sales abuse problem.

Several commenters, principally state securities regulators and their national association, supported the proposal. They believed that microcap fraud would be deterred if broker-dealers are required to review issuer information and make their own independent and substantiated determinations before publishing quotations. Further, commenters favoring the proposal stated that the availability of information via EDGAR and the speed of communication via the Internet would ease any increased burden on broker-dealers created by the Rule amendments. Finally, a number of commenters were more neutral in their approach and offered views or suggestions on specific provisions.

II. Overview of Reproposed Amendments

The Commission is issuing a revised proposal to amend Rule 15c2–11 to help curtail abuses in the offer, sale and trading of microcap securities. Because these amendments will significantly change the Rule's scope, we are publishing them to give interested persons an opportunity to provide us with their comments and views.

The amendments are intended to have broker-dealers ''stop, look and listen'' before they begin to quote a covered OTC security in a quotation medium other than a national securities exchange or Nasdaq. However, the amendments reflect commenters' concerns about the earlier proposal by limiting the scope of the Rule principally to priced quotations and to those securities that the Commission believes are more likely to be the subject of improper activities. Under these amendments, the Rule will no longer apply to securities of larger issuers, or to securities that have a substantial trading price or that meet a minimum dollar value of average daily trading volume. In addition, the Rule will only cover priced quotations, except in the case of the first quotation for a covered OTC security. The provisions relating to the broker-dealer's obligations under the Rule and the issuer information that the broker-dealer must review are little changed from the initial proposal.

We also are providing guidance regarding the steps broker-dealers should take and ''red flags'' they should consider when reviewing the Rule's required information. In response to commenters' concerns about broker-dealer liability, we stress that broker-dealers will have no obligation to continuously update their Rule 15c2–11 materials. The broker-dealer's review obligations under the Rule occur only at the specific times identified in the Rule.

In general, the amendments would:

- Limit the Rule primarily to priced quotations; [19]
- Eliminate the Rule's piggyback provision and require all broker-dealers to review current issuer information before publishing priced quotations for a security;
- Require broker-dealers publishing priced quotations for a security to review current information about the issuer annually and upon the occurrence of specified events;
- Expand the information required for certain non-reporting issuers;
- Require documentation of the broker-dealer's compliance with the Rule; and
- Require broker-dealers publishing quotes in compliance with the Rule to provide the issuer information upon request to customers, prospective customers, information repositories, and other broker-dealers.

In addition, the amendments would exclude from the Rule's coverage:

- Securities with a worldwide average daily trading volume value of at least $100,000 during each month of the six full calendar months immediately preceding the date of publication of a quotation, and convertible securities where the underlying security satisfies this threshold;
- Securities with a bid price of at least $50 per share;
- Securities of issuers with net tangible assets in excess of $10,000,000, as demonstrated by audited financial statements;
- Non-convertible debt and non-participatory preferred stock; and
- Asset-backed securities that are rated as investment grade by at least one nationally recognized statistical rating organization.

These amendments are intended to enhance the integrity of quotations for securities in this market sector, to improve the quality of information about smaller, lesser-known issuers, and to foster greater access to this information by investors. The amendments also reorganize and simplify the Rule's provisions consistent with the Commission's Plain English program.

III. Discussion of Amendments

The amendments restructure Rule 15c2–11 by setting forth more clearly the quotation events that trigger the Rule, the requirements that the broker-dealer must satisfy, and the nature of the information that the broker-dealer must review. The amendments state that no broker-dealer, directly or indirectly, may publish the described kinds of quotations for a security in any quotation medium, without first complying with the Rule's provisions. The Rule will only apply at specified points in time, namely, when a broker-dealer publishes:

- The first quotation for a security;
- Its first quotation at a specified price for a security after another broker or dealer published the first quotation for the same security;
- The first quotation following the termination of a Commission trading suspension ordered pursuant to section 12(k) of the Exchange Act [20] in any security of the issuer of the suspended security;
- A quotation at a specified price for a security after a period of five or more consecutive business days when it did not publish any quotations at a specified price for that security;
- Its first quotation at a specified price for a security after the date that is four months after the end of the issuer's fiscal year, unless the issuer is a foreign private issuer; or
- Its first quotation at a specified price for a security of a foreign private issuer after the date that is seven months after the end of the issuer's fiscal year.

The broker-dealer's information gathering and review requirements are substantially the same as the initial proposal.[21] If the Rule applies, the broker-dealer must:

- Review the Rule's specified information;
- Determine that it has a reasonable basis for believing that the information is accurate in all material respects and was obtained from reliable sources;
- Record the date it reviewed the specified information, the sources of the information, and the person at the firm responsible for the broker-dealer's compliance with the Rule; and

[19] The amendments, however, will prohibit the first broker-dealer from publishing a priced or unpriced quotation for a covered OTC security unless it complies with the Rule. For a discussion of the requirements concerning the initial quotation for a covered OTC security, *see* Part III.B.1. below.

[20] 15 U.S.C. 78*l*(k).

[21] However, we are narrowing the scope of the requirement contained in the Proposing Release that broker-dealers provide the Rule 15c2–11 information to others upon their request. *See* Part II.D. below.

• Preserve the specified information in accordance with Rule 17a–4.[22]

Commenters on the Proposing Release did not object to the standards set forth in these review and documentation requirements. Rather, they expressed concerns about the scope of a broker-dealer's review obligations under the earlier proposal, particularly as some of them misconstrued the proposal to require continuous updating of information. To assist broker-dealers publishing quotations for covered OTC securities, we are giving guidance in an appendix to this release about the nature of the review we expect broker-dealers to conduct under both the current Rule and the proposed amendments.

A. Securities Excluded From the Rule

Several commenters suggested that the Rule should cover only those securities that have the characteristics that have led to abuses in the microcap market.[23] These commenters noted that, while the earlier proposal was intended to focus on microcap abuses, it covered quotations for a number of non-reporting foreign and domestic issuers' securities that are unlikely to be the targets of microcap schemes. They suggested that the amendments be crafted to cover only those equity securities most likely to be prone to abusive activities.

We agree that applying the Rule to the securities of larger issuers, more liquid securities, and certain fixed-income debt securities is not directly related to microcap fraud concerns.[24] We therefore are proposing to exclude from Rule 15c2–11 those securities satisfying any one of three alternative tests based on: the value of the security's average daily trading volume (ADTV); the security's bid price; or the issuer's net tangible assets.[25] We are also proposing to exclude debt securities, non-participatory preferred stock, and investment grade asset-backed securities.

1. Securities Satisfying a Trading Value Test

To tailor the Rule to transactions that we believe are most likely to involve microcap fraud, the amendments exclude securities with a value of worldwide ADTV of at least $100,000 during each month of the six full calendar months immediately preceding the date of publication of a quotation.[26] Convertible securities will also be excluded when the underlying security satisfies this threshold.

The majority of OTC stocks of U.S. companies that are not listed on an exchange or Nasdaq trade infrequently and will not satisfy for a test based on a value of ADTV of $100,000 or more during each month over a six month measuring period. However, there are a number of non-reporting issuers having securities with significant trading levels, particularly larger foreign issuers with actively traded securities in their home markets. We think that it is appropriate to take this trading activity into account in applying the value of ADTV test.

The price of a microcap security that is the subject of a fraud often is manipulated upward rapidly so that those involved in the manipulation can quickly sell stock at a significant profit, to the detriment of innocent investors. Microcap securities involved in such manipulations often are thinly traded, and the daily trading volume for such securities rarely reaches a value of $100,000 over an extended period of time. We believe that measuring the value of the security's ADTV over a six month period is a way to ensure that the securities qualifying for this exclusion are not involved in the type of short-term price manipulations frequently seen in microcap schemes.

A broker-dealer should determine the value of a security's ADTV from information that is publicly available and that the broker-dealer has a reasonable basis for believing that the information is reliable.[27] In calculating the value of ADTV in U.S. dollars, any reasonable and verifiable method may be used.[28] For example, it may be derived from multiplying the number of shares by the price in each trade. The NASD may also be able to assist broker-dealers in determining whether a particular security is eligible for the exclusion.

Q1. Should the dollar value of ADTV for this exclusion be higher than $100,000, *e.g.*, $500,000 or $1 million, or should it be a lower amount, *e.g.*, $50,000? Commenters should provide data and analysis to support suggested revisions to this proposed threshold.

Q2. Should the dollar value of ADTV measuring period be longer than six months, *e.g.*, twelve months, or be shorter, *e.g.*, three months? Should the length of the measuring period depend on the amount of the value of ADTV threshold, *i.e.*, should a lower value of ADTV threshold be allowed but require a longer measuring period?

Q3. Should the exclusion based on ADTV value also incorporate a value of public float test, like Regulation M does? If so, should the public float value be $25 million or some higher or lower amount? Would public float information be easy or difficult to obtain for non-reporting issuers?[29]

Q4. Rule 101 under the Commission's Regulation M excludes from that rule's trading prohibitions securities with a value of ADTV of $1 million or more, using a two month measuring period, if the issuer has a public float value of at least $150 million. Should Rule 15c2–11's exclusion parallel the terms of this exclusion?

2. Securities Satisfying a Bid Price Test

To limit the Rule to transactions that the Commission believes are most likely to involve microcap fraud, we are proposing an amendment to exclude securities with a bid price of at least $50 per share at the time the quotation is published in the quotation medium.[30] While the vast majority of OTC stocks are quoted at lower prices and will not typically satisfy for a test based on a bid price of at least $50 per share, there are

[22] 17 CFR 240.17a–4.

[23] *See, e.g.*, Letter from Securities Industry Association (April 28, 1998) (SIA Comment Letter).

[24] Of course the general antifraud provisions of the federal securities laws, including Rule 10b–5 (17 CFR 240.10b–5), apply to transactions in all securities, whether or not excluded from Rule 15c2–11.

[25] We estimate that at least 10% of covered OTC securities will be excluded from the Rule under these tests. We estimate that approximately 5% of the OTC securities of U.S. companies, 10% of the OTC securities of foreign issuers (excluding ADRs), and 66% of OTC American Depositary Receipts (ADRs) will satisfy any one of these three alternative tests.

[26] We have used an ADTV value of $100,000 in another, but related, context. Rules 101 and 102 of Regulation M, 17 CFR 242.101 and 102, provide for a one business day restricted period for securities with an ADTV value of at least $100,000 (as measured over a 60 day period), if the issuer has a public float value of at least $25 million. These rules are intended to prevent manipulative activities during a distribution.

[27] A broker-dealer will be able to rely on trading volume as reported by SROs or comparable entities, or any other source believed to be reliable. Electronic information systems that provide information regarding securities in markets around the world could provide an easy means to determine worldwide trading volume in a particular security. Worldwide trading volume includes all markets, domestic or foreign, where an OTC security is traded.

[28] This is comparable to the calculation of value of ADTV under Regulation M. *See* Securities Exchange Act Release No. 38067 (December 20, 1996), 62 FR 520, 537.

[29] *See id.*

[30] Most of the Commission's recent trading suspension orders issued under Section 12(k) of the Exchange Act, 15 U.S.C. 78*l*(k), have involved securities quoted on the OTC Bulletin Board or the Pink Sheets. Our staff's analysis of these trading suspension orders, issued between April 1, 1994 and January 1, 1998, showed that the suspended OTC securities had an average bid price of approximately $5, with a median bid price of approximately $3. These securities had bid prices that ranged from a low of approximately $0.50 to a high of approximately $18.

securities of closely-held issuers that are quoted at significant share prices. The broker-dealer publishing the quotation can use its own *bona fide* quotation to satisfy the test. The broker-dealer cannot use its own or another broker-dealer's unpriced quotation to rely on this test, even if the broker-dealer publishing a name-only quotation provides a bid price of at least $50 per share upon inquiry. If a security is a unit composed of one or more securities, the bid price of the unit, when divided by the number of shares of the unit that are not warrants, options, rights, or similar securities, must be at least $50 to be excepted from the Rule.[31]

Q5. Should this exclusion be based on a bid price higher than $50 per share, *e.g.*, $100 per share or lower, *e.g.*, $20 per share? Commenters should provide data and analysis to support suggested alternatives to the proposed threshold.

Q6. Should this exclusion be available only if the security has a bid price of $50 over a specified period of time?

Q7. Should this test be based instead on the security's last sale price? If so, should there be a time limit added to such a test so that a stale last sale price cannot be used?

3. Securities of Issuers Satisfying a Net Tangible Assets Test

Microcap fraud schemes generally involve issuers with limited assets.[32] We are therefore proposing to exclude securities of issuers having net tangible assets in excess of $10,000,000, as determined by audited financial statements.

If the issuer is not a foreign private issuer, a broker-dealer should make this determination using the most recent financial statements for the issuer that have been audited and reported on by an independent public accountant in accordance with the provisions of Rule 2–02 of Regulation S–X.[33] If the issuer is a foreign private issuer, a broker-dealer should make this determination using the most recent financial statements for the issuer (dated less than 18 months prior to the date of the publication of the quotation) that are prepared in accordance with a comprehensive body of accounting principles, audited in compliance with requirements of the country of incorporation, and reported on by an accountant duly registered and in good standing under the regulations of that jurisdiction.[34] If audited financial statements are unavailable, the broker-dealer may not rely on this exception.

Some commenters suggested that we look to the current definition of ''penny stock'' in assessing the scope of Rule 15c2–11. Exchange Act Rule 3a51–1 excludes from the definition of penny stock a security of an issuer having net tangible assets in excess of $2 million, if the issuer has been in continuous operation for at least 3 years, or $5 million, if the issuer has been in continuous operation for less than three years.[35] We preliminarily believe that, for purposes of an exclusion from the Rule, the net tangible assets amount should be higher, and, unlike the definition of penny stock, the threshold need not distinguish between newer and more seasoned issuers.

Q8. Should the threshold amount for this net tangible assets test be higher than $10 million, *e.g.*, $20 million? Under what circumstances would it be appropriate to permit a lower threshold amount? Commenters should provide data and analysis to support their views on whether the threshold amount should be raised or lowered.

Q9. For ease of compliance with both Commission and NASD rules, should this exclusion parallel the exclusion contained in the NASD's proposed rule that would require broker-dealers to review current information about the issuer of an OTC security before recommending a transaction in the security?[36] The NASD proposal would exclude the securities of issuers having total assets of at least $100 million and shareholders' equity of at least $10 million, based on audited financial statements.

Q10. Will there be sufficient information in financial statements, particularly those of non-reporting issuers, to permit broker-dealers to make the net tangible assets calculation?

Q11. Should the use of financial statements of a foreign private issuer be limited to financial statements prepared in accordance with U.S. generally accepted accounting principles (GAAP)?

Q12. Should the use of financial statements of a foreign private that are not prepared in accordance with U.S. GAAP be limited to financial statements prepared in accordance with the accounting standards promulgated by the International Accounting Standards Committee (IASC)?[37]

Commenters are invited to provide us with their views on the alternative tests for an exclusion from Rule 15c2–11, as described above.

Q13. Should all three of the tests based on value of ADTV, bid price, and net tangible assets be incorporated into Rule 15c2–11?

Q14. Should the proposed exclusions from the Rule be limited to those securities that satisfy at least two of the three tests?

Q15. Are there other tests that are more appropriate to exclude the securities of larger, more seasoned issuers from Rule 15c2–11? For example, should a security that has no or very minimal trading volume be excluded from the Rule's requirements? What would be an appropriate low volume threshold? If trading volume suddenly exceeded the low volume threshold, would broker-dealers publishing quotes find it easy or difficult to have to obtain and review information before continuing to publish priced quotations?

4. Non-Convertible Debt, Non-Participatory Preferred Stock, and Asset-Backed Securities

We are proposing to exclude non-convertible debt securities, non-participatory preferred stock,[38] and asset-backed securities that are rated by at least one nationally recognized statistical rating organization, as that term is used in Rule 15c3–1 under the Exchange Act,[39] in one of its generic rating categories that signifies investment grade.[40] Commenters on this

[31] This is comparable to the provisions excluding equity securities priced at $5 or more from the definition of ''penny stock'' contained in 17 CFR 240.3a51–1(d)(2).

[32] Analysis of OTC securities that were the subject of recent Commission-ordered trading suspensions showed the issuers on average had approximately $3,500,000 in net tangible assets, with a median of approximately $225,000 is such assets.

[33] 17 CFR 210.2–02.

[34] These financial statements may be found in filings with the Commission on Forms 20–F or 6–K, or in submissions under Rule 12g3–2(b) under the Exchange Act (17 CFR 240.12g3–2(b)), or elsewhere.

[35] 17 CFR 240.3a51–1.

[36] *See* proposed NASD Rule 2315, which the Commission recently issued for public comment. Securities Exchange Act Release No. 41075 (February 19, 1999). The proposed rule will be available through the NASD Regulation Internet website at <http://www.nasdr.com> and our Internet website at <http://www.sec.gov>.

[37] IASC's accounting standards are summarized on, and may be ordered through, the IASC's Internet website at <http://www.iasc.org.uk>.

[38] Non-participatory preferred stock means non-convertible capital stock, the holders of which are entitled to a preference in payment of dividends and in distribution of assets on liquidation, dissolution, or winding up of the issuer, but are not entitled to participate in residual earnings or assets of the issuer. *See* paragraph (j)(8) of the Rule proposal, which is based upon a definition contained in Rule 902(a)(1) of Regulations S (17 CFR 230.902(a)(1)).

[39] 17 CFR 240.15c3–1 (net capital requirements for broker-dealers).

[40] The Commission's staff is engaged in a project to consider the development of disclosure and registration requirements specifically related to asset-backed securities. As part of that project, the staff intends to examine further the role of ratings with respect to asset-backed securities. Therefore, we consider it appropriate to limit the proposed

Continued

issue generally supported excluding fixed-income securities from the Rule.

The fraud and manipulation that we have observed in the microcap securities have not been evident in the fixed-income market. In addition, non-convertible debt securities, non-participatory preferred stock, and investment grade asset-backed securities generally trade at prices and in denominations that make them less likely targets for manipulation. Further, the type of issuer information required by the Rule is much less relevant to the pricing and trading of these types of securities.

Q16. Should this exclusion apply to all asset-backed securities or should the exclusion apply only to asset-backed securities that are rated investment grade on the basis that those securities are even less likely to be subject to fraudulent activities?

Q17. Should the Rule exclude all non-convertible debt and non-participatory preferred stock or should the exclusion apply only to non-convertible debt and non-participatory preferred stock that are rated investment grade?

5. Other Exceptions

The exceptions relating to quotations for exchange-listed and Nasdaq securities, quotations representing a customer's unsolicited order, and quotations for exempted securities remain substantively the same as currently in the Rule. As we indicated in the Proposing Release, the unsolicited status of the customer orders would be called into question if a broker-dealer repeatedly publishes quotations on the basis of the unsolicited customer order exception.[41]

Q18. Should unsolicited customer orders be required to be identified as such in the quotation medium? Is it feasible for quotation mediums to show that the quote represents an unsolicited customer order?

B. Quotations Subject to the Rule

1. The Initial Quotation for a Covered OTC Security

As indicated above, the Rule's requirements will apply at the time of discrete quotation events. Subject to the Rule's exceptions, the amendments will prohibit the first broker-dealer from publishing a priced *or* unpriced quotation for a covered OTC security in a quotation medium unless it has obtained and reviewed specified information about the issuer and the security. Further, this information will need to be submitted to the NASD, in accordance with the NASD's rules, at least three business days before the quotation is published.[42] There is one situation that ''restarts'' the Rule's requirements: following the termination of a Commission trading suspension ordered pursuant to Exchange Act Section 12(k),[43] the broker-dealer publishing the first quote, whether it is priced or unpriced, must comply with Rule 15c2–11. In essence, this is the way the Rule currently works.

We believe that the Rule should cover the first quotation as a means to assure that there is basic information about the issuer available to the marketplace before trading in the security begins and to alert regulators that trading in the security will be starting. The NASD uses Rule 15c2–11 submissions for surveillance and enforcement purposes and routinely provides copies of this information to the Commission.

2. Priced Quotations

While the first broker-dealer must obtain the required information for the initial quotation (priced or unpriced) for a covered OTC security as discussed above, thereafter the Rule will only apply to broker-dealers submitting their first *priced* quotations. The Rule's review requirements are also triggered when a broker-dealer first publishes a priced quotation following the lapse of five or more business days of its priced quotations for the security. In addition, as discussed below, a broker-dealer must satisfy the Rule's requirements if it publishes a priced quotation as of a specific date following the end of the issuer's fiscal year.

We propose to focus the Rule's requirements after publication of the first quote on priced quotations, because recent microcap manipulation schemes have primarily involved priced quotations. In addition, priced quotes are used as indicia of value for a variety of purposes (*e.g.*, bank loans or pledges of securities). This revision also responds to the concerns of several commenters that the earlier proposal could have resulted in some broker-dealers being precluded from publishing any quotations if they could not obtain the Rule's required information. We solicit commenters' views, however, on whether unpriced indications of interest will be used more often in unlawful microcap activities, and, if so, whether the Rule should cover all initial quotations.

3. Annual Review

The amendments require a broker-dealer to review the specified information annually if the broker-dealer publishes *priced* quotations for the security. The date by which the annual review must be performed depends on whether the issuer is a domestic or a foreign company:

- *Domestic Issuers:* The annual review must occur prior to the first priced quotation that is more than four months after the end of the issuer's fiscal year.
- *Foreign Private Issuers:* The annual review must occur prior to the first priced quotation that is more than seven months following the end of the issuer's fiscal year.

The purpose of this requirement is to make sure that the broker-dealer periodically reviews fundamental information about the issuer if the broker-dealer continues to publish priced quotations. The broker-dealer should know if no current information about the issuer exists or if current information reflects a significant change in the issuer's ownership, operations, or financial condition.

While we originally proposed two alternative dates for conducting the annual review, to simplify the Rule we are reproposing only one date for each type of security.[44] Four months after the end of the issuer's fiscal year, a broker-dealer publishing priced quotes for a covered OTC security of a domestic issuer must have conducted the annual review. In the case of a foreign private issuer's security, the annual review must occur before the broker-dealer publishes a priced quote following the date that is seven months after the issuer's fiscal year end. We believe that these time periods give a broker-dealer sufficient time to obtain and review updated issuer information for both reporting and non-reporting issuers.

Some commenters opposed the annual review requirement because of potential recordkeeping burdens, the perceived difficulty of obtaining the required information, and the loss of liquidity that could potentially occur if broker-dealers could not publish priced quotes because current issuer information was unavailable.[45]

exclusion to investment grade asset-backed securities at this time.

[41] Proposing Release, 63 FR at 9669. Also, we are combining into a single provision the current exceptions for exchange-listed and Nasdaq securities.

[42] For a discussion of the requirements under the reproposed amendments concerning the submission of information to the NASD, *see* Part III.I. below.

[43] 15 U.S.C. 78*l*(k).

[44] The initial proposal would have permitted a broker-dealer to conduct the annual review as of the anniversary date of the initial quotation.

[45] *See* Letter from A.G. Edwards & Sons, Inc., (April 27, 1998) (A.G. Edwards Comment Letter); and Letter from National Quotation Bureau, LLC, (April 27, 1998) (NQB Comment Letter).

Commenters stated that the Rule's review requirements represented a shift from the Commission and the SROs to broker-dealers of the burdens of overseeing issuer compliance with regulatory requirements.[46] Some commenters wrote that the annual review is only appropriate for certain non-reporting companies or issuers for which only limited information is available. Other commenters stated that the annual review should not apply to issuers that are current in their reporting requirements because this information is available on EDGAR.[47] A number of commenters, however, generally supported some sort of required annual review for broker-dealers publishing priced quotations, although they differed as to the securities that should be subject to this provision.[48]

The amendments will apply the annual review requirement to priced quotations for both reporting and non-reporting issuers' securities. We believe that an annual review requirement for both reporting and non-reporting issuers' securities fulfills the objectives of the Rule without imposing significant burdens on broker-dealers. This is especially so because we are revising the Rule to cover only those securities that, in our view, are most likely to be the subject of microcap fraud schemes and are also limiting the scope of the annual review to priced quotations. We also note that because information about reporting issuers is available on the Commission's website, the review of information about these issuers can be accomplished quite easily.

Commenters are requested to provide us with their views on the reproposal's focus on priced quotations.

Q19. Should the Rule cover all broker-dealers' initial quotations, whether priced or unpriced, as the earlier proposal would have? Will the reproposal cause broker-dealers to publish unpriced quotes to avoid complying with the Rule?

Q20. Should the Rule apply exclusively to priced quotes, *i.e.*, the Rule would not cover any unpriced quotes?

Q21. Are there other approaches that would be more appropriate, *e.g.*, to cover any initial quote for a covered OTC security by a broker-dealer, whether priced or unpriced, but not to apply the Rule or at least the annual review requirement to reporting issuers' securities? How would such a proposal help reduce instances of microcap fraud?

Q22. Is the Rule text sufficiently clear in identifying the quotation events that are subject to the Rule's provisions? Are there other quotation events that should be covered by the Rule?

Q23. Should the provision pertaining to a lapse in quotations of five consecutive business days or more provide for a longer time period, *e.g.*, ten consecutive business days without a priced quotation, or a shorter time period, *e.g.*, three consecutive business days without a priced quotation?

Q24. Should the Rule give broker-dealers the option to conduct the annual review as of the anniversary date of the initial quotation by the broker-dealer?

C. Information Required Under the Rule

The amendments are substantially identical to the earlier proposal with respect to the issuer information that a broker-dealer must review before publishing a quotation for a covered OTC security. Under the reproposal, a broker-dealer subject to the Rule must gather, review, and maintain in its records the following issuer information:

- For an issuer that has conducted a recent public offering either registered under the Securities Act of 1933 (Securities Act) or effected pursuant to Regulation A under the Securities Act, a copy of the prospectus or offering circular;
- For an issuer that files reports with the Commission pursuant to Sections 13 or 15(d) of the Exchange Act[49] (reporting issuer), the issuer's most recent annual or semi-annual report and any subsequent quarterly and current reports;
- For an issuer that is an insurance company of the kind specified in Section 12(g)(2)(G) of the Exchange Act,[50] the issuer's most recent annual statement referred to in Section 12(g)(2)(G)(i);
- For an issuer that is not required to file reports pursuant to Sections 13 or 15(d) of the Exchange Act and that is a bank or savings association, the issuer's most recent annual report and any subsequent reports filed with its appropriate federal or state banking authority; and
- For any other issuer, the information, including certain financial information, specified in proposed paragraph (c)(6) of the Rule, which must be reasonably current in relation to the day a quotation is submitted.

The broker-dealer also must obtain and review the supplemental information contained in paragraph (d) of the reproposed Rule. A broker-dealer must review a copy of any trading suspension order issued under Section 12(k) for any of the issuer's securities during the 12 months preceding the publication of the quotation, as well as any other material information, including adverse information, that comes to the broker-dealer's knowledge or possession before publication of the quotation. A broker-dealer must consider this supplemental information, along with the issuer information, when it determines whether it has a reasonable basis for believing that the issuer information is accurate and from reliable sources. While we are not including a requirement that the broker-dealer obtain and review any trading suspension for a foreign security that was issued by a foreign financial regulatory authority, this information must be taken into account by the broker-dealer if it comes to the broker-dealer's knowledge or possession at the time that a review is required.

In addition, the broker-dealer must make a record of the significant relationship information contained in paragraph (e) of the reproposed Rule, which is unchanged from the Proposing Release. Under this provision, a broker-dealer would have to document specified information such as whether the broker-dealer has any affiliation with the issuer or arrangements to receive any consideration to publish the quote, and whether the quote is being published on behalf of another broker-dealer or the issuer, any of its insiders, or any large shareholder.

Commenters generally did not object to the issuer, significant relationship, and supplemental information requirements; in fact, some commenters favored the enhanced information requirements for non-reporting issuers.[51] Therefore, we are reproposing these requirements without any substantive changes, other than revisions relating to financial statements for non-reporting issuers, as discussed

[46] *See, e.g.*, A.G. Edwards Comment Letter.

[47] *See, e.g.*, NQB Comment Letter.

[48] *See* Letter from NASD Regulation, Inc., (July 17, 1998) (NASD Comment Letter); Letter from North American Securities Administrators Association, Inc., (April 27, 1998) (NASAA Comment Letter); and SIA Comment Letter.

[49] 15 U.S.C. 78m and 78*o*(d).

[50] 15 U.S.C. 78*l*(g)(2)(G).

[51] In response to the 78 comment letters that we received from issuers of securities quoted on the OTC Bulletin Board who were concerned about continued liquidity for their securities, we note that 33 of these issuers are reporting companies. Also, under recently approved amendments to NASD Rules 6530 and 6540, all of these issuers ultimately will need to be reporting companies current in their reporting obligations in order for their securities to remain on the OTC Bulletin Board. *See* note 6 above and accompanying text. There should be no burdens on reporting issuers to provide information to broker-dealers wishing to publish quotations because the issuer information should be available on EDGAR, as long as the issuers are current in their reporting obligations.

below in Part III.C.4. We are addressing below specific points that a few commenters raised about the information requirements and other provisions. Commenters are welcome to provide their views on the information requirements for the various categories of issuers and should consult the Proposing Release for a more detailed description of these provisions.[52]

1. Reporting Issuers Delinquent in Their Filings

In the case of an issuer delinquent in its reporting obligations, a broker-dealer will not be able to publish an initial priced quotation, or continue to publish priced quotations after the annual review date, because it will not be able to obtain the specified reports. A few commenters indicated concern about the possible adverse implications for the market for delinquent issuers' securities if broker-dealers could not publish quotes when current issuer information was unavailable.[53] As noted above, we are revising the Rule to permit broker-dealers to publish unpriced quotations, even in the absence of current issuer information (except in the case of the first quotation for the security).

2. Issuers in Bankruptcy

a. Reporting Issuers

A few commenters urged us to permit broker-dealers to continue to quote the securities of reporting issuers that had filed for reorganization under federal bankruptcy law because it would provide liquidity for these securities.[54] They noted that it was often burdensome for small companies that had filed for reorganization under Chapter 11 of the Bankruptcy Code [55] to produce audited financial statements to comply with Exchange Act reporting requirements.

Commenters suggested that broker-dealers could satisfy the Rule's requirements by reviewing bankruptcy court filings made by an issuer in Chapter 11 reorganization when current Exchange Act reports were unavailable. One commenter also suggested that the Commission permit delinquent reporting companies that experience a 51% ownership change as a result of a confirmed plan of reorganization to begin reporting from the effective date of the reorganization plan with a filing with the Commission, attaching the court-approved disclosure statement together with a certified audited balance sheet as of the effective date.[56]

The reproposal will require a broker-dealer publishing quotations for a reporting issuer's securities to obtain the issuer's Exchange Act reports, even if the reporting issuer has filed for Chapter 11 reorganization. Thus, if a reporting issuer that has filed for Chapter 11 reorganization becomes delinquent in its reporting obligations, a broker-dealer will not be able to publish priced quotations covered by the Rule. For example, a broker-dealer could not continue to publish priced quotations as of the annual review date for a covered security of a reporting debtor that has become delinquent in its reporting obligations.[57]

The bankruptcy court filings for an issuer undergoing reorganization under Chapter 11 are not adequate to satisfy the Rule's requirements. These Rule 2015 bankruptcy reports ordinarily contain only data about issuer receipts and disbursements and not the type of issuer financial information contemplated by Rule 15c2–11.[58] In some cases, our Division of Corporation Finance may grant issuers in bankruptcy no-action relief with respect to Exchange Act filing requirements.[59] These no-action positions, however, are predicated on little or no trading occurring in the debtor's securities. The Rule 2015 bankruptcy reports that the Division of Corporation Finance accepts under its no-action position do not satisfy Rule 15c2–11 because this financial report usually contains only information about issuer receipts and disbursements. Where a reporting issuer receives this type of no-action position, a broker-dealer would not be able to obtain the issuer information required by the Rule until the debtor's reorganization plan becomes effective, and the debtor files a Form 8–K, which instead of attaching the Rule 2015 bankruptcy reports, now includes the issuer's audited balance sheet. Under Rule 15c2–11, broker-dealers could review this 8–K, which contains an issuer's audited balance sheet, and then publish priced quotations. From then on, the issuer must file its Exchange Act periodic reports for all periods that begin after the plan becomes effective.[60] The publication of quotations by a broker-dealer indicates that a market exists for the issuer's securities. It would be inconsistent with the premise of the no-action position (*i.e.*, that there is no trading in the issuer's securities) if a broker-dealer were able to stimulate trading by publishing quotations without having the issuer's Exchange Act reports.

Q25. Are there circumstances in which a broker-dealer should be permitted to publish priced quotations for the securities of delinquent reporting issuers in bankruptcy? Please describe these circumstances. Should the Rule prohibit broker-dealers from publishing unpriced quotes for the securities of these issuers?

b. Non-Reporting Issuers Emerging From Bankruptcy

The Proposing Release contained amendments to permit broker-dealers that quote the securities of non-reporting companies emerging from bankruptcy to review the bankruptcy court-approved disclosure statement and issuer financial information required by the Rule from the date that the bankruptcy court confirms the reorganization plan.[61] The commenters who addressed this issue supported the proposal to limit a broker-dealer's review to the post-reorganization information.[62] The amendments are unchanged from the original proposal.

---

[52] *See* Part II.A.4. of the Proposing Release at 63 FR 9661, 9664–9669.

[53] *See, e.g.,* NASAA Comment Letter.

[54] *See, e.g.,* Letter from Daniel J. Demers (March 27, 1998) (Demers Comment Letter); Letter from Robotti & Company, Inc., (April 27, 1998) (Robotti Comment Letter); and NQB Comment Letter. In 1989, we sought comment on whether there were situations, such as bankruptcy, that should be addressed if the piggyback provision were revised. *See* Securities Exchange Act Release No. 27247 (September 14, 1989), 54 FR 39194 (1989 Release). Commenters on the 1989 Release argued that it was appropriate to permit broker-dealers to continue quoting the securities of issuers that had filed for bankruptcy because it provided liquidity for these securities and suggested that issuers in bankruptcy be identified in the quotation system by using a special indicator.

[55] 11 U.S.C. 1101 *et seq.*

[56] Demers Comment Letter; *see also* 11 U.S.C. 1125. The disclosure statement includes, among other things, a description of the issuer's business plan, a description of any securities to be issued, and financial information.

[57] Broker-dealers would be able to continue to publish unpriced quotations.

[58] *See* Federal Rule of Bankruptcy Procedure 2015 (Rule 2015 bankruptcy reports).

[59] *See* Staff Legal Bulletin No. 2 (April 15, 1997) (CF) (Staff Legal Bulletin No. 2), which is available through our Internet website at <http://www.sec.gov/rules/othern/slbcf2.txt>. Under Staff Legal Bulletin No. 2, our Division of Corporation Finance has granted no-action relief permitting an issuer in Chapter 11 reorganization to satisfy its Exchange Act reporting obligations by filing the Rule 2015 bankruptcy reports on Exchange Act Form 8–K. *See* 17 CFR 249.308. Under Staff Legal Bulletin No. 2, the staff has allowed a company to substitute its Rule 2015 bankruptcy reports for its Exchange Act periodic reports when there is little or no trading in the debtor's securities.

[60] *See* Staff Legal Bulletin No. 2.

[61] *See* 11 U.S.C. 1125. The disclosure statement includes, among other things, a description of the issuer's business plan, a description of any securities to be issued, and financial information.

[62] *See* Letter from Florida Division of Securities (April 27, 1998) (Florida Comment Letter); NQB Comment Letter; Demers Comment Letter; and Robotti Comment Letter. Mr. Demers suggested that the required financial information for non-reporting issuers emerging from bankruptcy be from the ''effective date'' of the plan, instead of the ''confirmation date'' of the plan. We are retaining

3. Non-Reporting Foreign Private Issuers

In the case of a foreign private issuer that relies on an exemption from registration under Section 12(g)[63] of the Exchange Act by complying with Exchange Act Rule 12g3–2(b), Rule 15c2–11 specifies that a broker-dealer must review the information submitted to the Commission under Rule 12g3–2(b).[64] To qualify for the registration exemption, the issuer must furnish to the Commission information that the issuer has made or is required to make public under the law of the country in which the foreign private issuer is domiciled or incorporated; has filed or is required to file with a stock exchange on which the securities are traded and which the exchange has made public; or has distributed or is required to distribute to its securityholders. For foreign private issuers that do not furnish the Commission with information under Rule 12g3–2(b), the Rule currently requires broker-dealers to obtain and review the same kind of information, including financial information, as required for non-reporting domestic issuers.

We note that Rule 12g3–2(b) contains no specific requirements governing the categories of information the issuer must furnish to the Commission under the exemption. As a result, there is no assurance that broker-dealers publishing quotes will obtain the same type of information for each foreign private issuer that claims the Rule 12g3–2(b) exemption as they must for other non-reporting foreign private issuers. This can be problematic since a number of issuers claiming the Rule 12g3–2(b) exemption are foreign microcap companies that can potentially be subject to the same kinds of abusive practices as their U.S. counterparts.

Therefore, we are proposing to change Rule 15c2–11 requirements with respect to quotations for the securities of foreign issuers complying with Rule 12g3–2(b). Broker-dealers publishing quotations for the securities of Rule 12g3–2(b) issuers will have to obtain and review the information specified in paragraph (c)(6) of the reproposed Rule.[65] However, as described in more detail below, we propose to revise the financial statements that must be reviewed for non-reporting foreign private issuers to recognize the foreign status of these issuers.[66] By eliminating the provision for Rule 12g3–2(b) issuers, all non-reporting foreign private issuers will be treated similarly under Rule 15c2–11.

Commenters were divided on whether we should amend the provisions of the Rule governing the review of information for non-reporting foreign private issuers.[67] Because the reproposal excludes the securities of many larger foreign issuers from Rule 15c2–11 and also distinguishes between U.S. and foreign accounting standards for those foreign issuers that continue to be covered, many of the reasons for permitting broker-dealers to rely on Rule 12g3–2(b) information have been addressed.

Q26. Should broker-dealers be required to obtain and review the same type of issuer information with respect to non-reporting foreign private issuers providing information under Rule 12g3–2(b) as they must for other non-reporting foreign issuers? Are there reasons to retain a special provision in Rule 15c2–11 for foreign issuers furnishing information under Rule 12g3–2(b)?

Q27. What is the experience of broker-dealers under the Rule when the foreign issuer has not furnished information to the Commission under Rule 12g3–2(b)? How difficult or easy will it be for broker-dealers to obtain the paragraph (c)(6) information for a non-reporting foreign private issuer?

4. Other Non-Reporting Issuers

The amendments parallel the Proposing Release in their treatment of non-reporting issuers (*i.e.*, those non-reporting issuers that are not financial institutions covered by paragraph (c)(4)), except for the new exclusions discussed in Part III.A. above and the revisions to the required financial information for non-reporting issuers. As in the Proposing Release, the Rule will require broker-dealers to review more information than currently required about the issuer's outstanding securities; the issuer's insiders, including their disciplinary history; and certain significant events involving the issuer, among other items. This information will provide a broker-dealer that is considering whether to publish quotations for such an issuer greater understanding of the issuer's operations and a better indication of whether potential or actual fraud or manipulation may be present.

Several commenters supported the requirement for a broker-dealer to review the disciplinary information about the insiders of non-reporting issuers. One commenter believed that if broker-dealers are allowed to publish quotations without obtaining this disciplinary information, it would create a loophole for issuers to avoid disclosing information that would be of utmost importance and would thereby defeat the goal of the Commission.[68] While no commenters directly opposed the requirement to obtain disciplinary information, several commenters objected to the enhanced information requirements in general as too difficult and burdensome, especially when issuers are unwilling to volunteer information.[69]

Q28. Should the Rule require the disciplinary history information for the insiders of all issuers of covered OTC securities, and not just insiders of non-reporting issuers, on the basis that microcap fraud can involve issuers whose insiders have histories of prior misconduct?

We are proposing to amend the financial information that a broker-dealer must review when publishing quotations of both domestic and foreign non-reporting issuers. The reproposal lists the financial statements required for a domestic issuer, which must be prepared in accordance with U.S. GAAP, and sets forth when these financial statements will be presumed ''current'' under the Rule. Absent contrary information, a domestic issuer's balance sheet will be considered current if it is as of a date that is less than 15 months before the quotation is published, rather than less than16 months as now specified in the Rule.[70] This revision comports with existing Exchange Act requirements regarding when a domestic reporting issuer's financial statements are considered

this amendment from the confirmation date because adequate information is available about the non-reporting issuer at this point for Rule 15c2–11 purposes.

[63] 15 U.S.C. 78*l*(g).

[64] 17 CFR § 240.12g3–2(b).

[65] Some of the paragraph (c)(6) information that broker-dealers will have to obtain and review may be present in the foreign issuer's Rule 12g3–2(b) materials.

[66] *See* Part III.C.4. below.

[67] For example, some commenters stated that we should delete the reference to Rule 12g3–2(b) and require broker-dealers to review the same information as required for all other foreign non-reporting issuers whose securities are subject to Rule 15c2–11. *See, e.g.,* Florida Comment Letter. Other commenters, however, indicated that we should continue to require broker-dealers to review only the home country information that certain foreign issuers submit to the Commission under Rule 12g3–2(b). *See, e.g.,* SIA Comment Letter.

[68] *See* NASAA Comment Letter.

[69] *See, e.g.,* Letter from David B. Schneider (April 21, 1998).

[70] This provision is a presumption that financial information that is less than 15 months old is current. However, if the broker-dealer has other information that indicates that the issuer's financial condition has materially changed from that shown in the financial statements, this presumption may not apply, and the broker-dealer should determine whether more recent financial information is available. Financial information older than 15 months is not current and does not satisfy the Rule's requirements. The presumption for non-financial information is that this information is considered current if it is as of a date within 12 months of publication of the quotation.

current. The reproposal also will require broker-dealers to review the specified financial information for such part of the two preceding fiscal years (in the case of the balance sheet, the preceding fiscal year) that the issuer (or any predecessor) has been in existence.

The reproposal also will revise the requirements with respect to the financial statements that broker-dealers must review when publishing a quotation for a non-reporting foreign private issuer's security. The reproposal lists the financial statements that the broker-dealer must review, which must be prepared in accordance with a comprehensive body of accounting principles, and sets forth when these financial statements will be considered current under the Rule. For a non-reporting foreign private issuer, its balance sheet will be presumed current if it is as of a date less than 18 months before the quotation is published.[71] Also, if the balance sheet is as of a date more than 9 months before the quotation is published, the broker-dealer must obtain more current financial information only to the extent that the issuer has prepared it. The broker-dealer must obtain the specified financial information for the two preceding fiscal years (one year with respect to the balance sheet) that the issuer has been in existence.

Q29. Are the financial statement requirements, including the presumption regarding when the information is considered current, clear and capable of being complied with by broker-dealers publishing quotations? Should there be longer time periods for the presumption regarding when the financial statements for a non-reporting foreign private issuer are considered current? If so, what time periods would be appropriate?

Q30. Are there any information requirements for non-reporting issuers that should be added or removed from reproposed paragraph (c)(6)?

D. Information Available Upon Request

We believe that some microcap frauds could be prevented if there were greater investor access to information about those securities and their issuers. Accordingly, we are reproposing, with some revisions, the requirement that a broker-dealer publishing quotations for any covered OTC security make the information promptly available upon request. In response to the Proposing Release, several commenters suggested that we restrict the types of persons and entities to which a broker-dealer must provide the information.[72] The amendments require a broker-dealer to provide information upon request to any current customer, prospective customer, information repository, or other broker-dealer.

A few commenters asserted that broker-dealers should not be required to provide information that already is generally available to the public from other sources (*e.g.*, information for reporting companies that is available on EDGAR).[73] We are addressing these concerns in the amendments by requiring broker-dealers to provide the required information that is not accessible through EDGAR, any other federal or state electronic information system, or an information repository. Further, most commenters responding to this issue were concerned about the cost of providing information to others upon request.[74] We believe that the cost of requiring broker-dealers to make the information available (including to other broker-dealers) upon request is minimal.[75]

The amendments retain in substantial form the clause that providing information to others does not constitute a representation by the broker-dealer that the information is accurate. Rather, providing the information to others constitutes a representation that the information is current in relation to the date the information was reviewed, and that the broker-dealer has a reasonable basis for believing that the information was accurate as of the date recorded and was obtained from reliable sources.

Q31. Should we require broker-dealers to make the information available to anyone who requests it, particularly if broker-dealers are permitted to charge reasonable fees? Should broker-dealers be required to provide information to fewer classes of persons?

E. Information Repository

The amendments, as in the Proposing Release, eliminate the piggyback provision of the Rule. The elimination of the piggyback provision and the potential for increased costs of compliance suggest the desirability of having a data base of information about the non-reporting issuers of covered OTC securities.[76] Such a data base also would enhance the availability of information about little-known issuers to investors, other professionals, and regulators. The consensus among the commenters who specifically addressed this issue was that the creation of a repository would foster access to information about issuers that do not participate in the public disclosure system.[77] For these reasons, we encourage the development of one or more repositories of Rule 15c2–11 information, but we note that the existence of a repository will not be necessary for broker-dealers to comply with the Rule.

The amendments establish that the Commission may, upon written application, designate an entity as an information repository.[78] In determining whether to grant or deny such a designation, the Commission will consider whether an entity:

- Collects information about a substantial segment of issuers of securities subject to the Rule;
- Maintains current and accurate information about such issuers;
- Has effective acquisition, retrieval, and dissemination systems;
- Places no inappropriate limits on the issuers from or about which it will accept or request information;
- Provides access to the documents deposited with it to anyone willing and able to pay the applicable fees; and
- Charges reasonable fees.

In general, the Commission will consider whether an entity wishing to act as an information repository is so organized and has the capacity to be able reasonably to obtain and provide to others current information required by the Rule. An information repository will be required to notify the Commission of any material changes in the facts and circumstances of their application for designation as an information repository. In the event that an information repository no longer satisfies these attributes, we may withdraw such designation.

[71] This presumption will operate in the same manner as for domestic issuers. *See* footnote 70 above.

[72] *See, e.g.*, Letter from Security Traders Association (April 28, 1998) (STA Comment Letter). We originally proposed that the information be made available to anyone upon request.

[73] *See e.g.*, Letter from Richard P. Ryder, Esq. (May 12, 1998).

[74] *See e.g.*, Letter from The Bond Market Association Comment Letter (April 27, 1998); NQB Comment Letter; and Florida Comment Letter.

[75] A broker-dealer may charge for the reasonable expenses it incurs in producing and forwarding copies of the Rule 15c2–11 information.

[76] We note that, for reporting issuers, information repositories already exist. Broker-dealers are able to access and review the required information on our EDGAR system, available through our Internet website at <http://www.sec.gov>. In addition, broker-dealers may consult federal or state electronic information systems for information about issuers of covered OTC securities.

[77] *See e.g.*, Letter from Singer Frumento Sichenzia, LLP, (April 13, 1998).

[78] This authority will be delegated to the Director of the Commission's Division of Market Regulation. We propose to amend Rule 200.30–3, which provides for delegation of authority to the Director, to include the designation of information repositories. *See* 17 CFR 200.30–3.

Some commenters suggested that the Commission assume the task of serving as the Rule 15c2–11 information repository.[79] Because the issuers that would be the focus of any information repository generally would not be required to file periodic reports with the Commission, this is not a function that we can assume at this time. The NASD has also advised us preliminarily that it is unable to undertake the responsibility of serving as an information repository at the present time. Therefore, we encourage private sector initiatives for the creation of one or more Rule 15c2–11 information repositories.

Q32. Are there other criteria that should be used to determine the information repository designation?

F. Definitions

Reproposed paragraph (j) of the Rule sets forth the definitions applicable to all provisions of the Rule. Most of the definitions are unchanged from the Proposing Release, but a few definitions are revised to respond to commenters' suggestions or to add clarity to the amendments.

Quotation Medium. The current definition of ''interdealer quotation system'' will be incorporated into the definition of ''quotation medium'' in paragraph (j)(12).[80] This definition of quotation medium is quite inclusive: it covers any publication, alternative trading system (ATS), or other device that is used by brokers or dealers to make known to others their interest in transactions in any security, including offers to buy or sell at a stated price or otherwise, or invitations of offers to buy or sell.[81] A few ATSs expressed concern about whether they would have to comply with the Rule's information review requirements with regard to any covered OTC security that is traded on their systems by broker-dealer subscribers to such ATSs.[82] ATSs are included in the definition of ''quotation medium'' if they display subscriber orders to any person other than ATS employees. The Rule's information review requirements, however, apply only to the broker-dealers that submit quotations for publication by the ATS, and not to the ATS functioning as the quotation medium for them. The Rule will apply to an ATS only if, as a registered broker-dealer, it displays its own orders in the ATS.

An issue has also been raised about whether Rule 15c2–11 applies to broker-dealers submitting orders through an ATS. We understand that some broker-dealers have taken the position that compliance with Rule 15c2–11 is not necessary when they submit an order through an ATS.[83] They have viewed such an order for the security as not constituting a quotation within the meaning of Rule 15c2–11. These orders may represent transactions for the broker-dealer's own account. The Rule's definition of quotation makes clear that the Rule covers any indication of interest by a broker or dealer in receiving bids or offers from others for a security, or any indication by a broker or dealer that it wishes to advertise its general interest in buying or selling a particular security. Thus, broker-dealers are subject to the Rule when they place any indication of interest in any quotation medium, including an ATS, that they wish to receive bids *or* offers in a covered OTC security, unless they can rely on one of the Rule's exceptions.[84]

Also, we are clarifying the Rule's application to broker-dealers that publish quotations in multiple quotation mediums or move their quotations from one quotation medium to another. If the broker-dealer complies with the Rule's provisions, based upon a review of information, it may publish quotations in one or more quotation mediums.[85]

Net tangible assets. We are proposing to add a definition to the Rule to assist broker-dealers in assessing whether or not a security can meet the proposed exception to the Rule for securities of issuers with net tangible assets exceeding $10 million. Net tangible assets means total assets less intangible assets and liabilities and this determination must be based on the issuer's current financial statements, which must be audited.

G. Preservation of Documents and Information

To facilitate compliance with the Rule's recordkeeping requirements, we believe that it is appropriate to codify the Rule's record preservation requirements in Rule 17a–4,[86] rather than in Rule 15c2–11. Rule 17a–4 obligates broker-dealers to preserve documents and information that they must compile pursuant to Commission rules for the time period and in the manner specified in the various provisions of Rule 17a–4. As in the Proposing Release, Rule 17a–4 would be amended to add the information specified in reproposed paragraphs (c), (d), and (e) of Rule 15c2–11 to the other information that broker-dealers are already required to preserve under Rule 17a–4.[87]

With regard to issuer information that is accessible to broker-dealers through our EDGAR system, any other federal or state electronic information system,[88] or an information repository, the amendments provide different requirements. If broker-dealers obtain and review the information contained on such systems, they will not need to preserve such information separately, as long as they document the review and the information is accessible on such system for the same period of time that

[79] *See, e.g.,* STA Comment Letter.

[80] Under the current Rule, *interdealer quotation system* is defined as any system of general circulation to brokers or dealers which regularly disseminates quotations of identified brokers or dealers. A separate definition of ''interdealer quotation system'' is no longer necessary because of the proposed elimination of the piggyback provision and the revision that the information be furnished to the NASD in accordance with NASD rules, rather than to interdealer quotation systems.

[81] We are using the term ''alternative trading system,'' which encompasses the term ''electronic communications network.'' *See* Securities Exchange Act Release No. 40760 (December 8, 1998), 63 FR 70844.

[82] *See e.g.,* Letter from Instinet (April 22, 1998).

[83] For example, some broker-dealers have claimed to submit customer ''orders'' in quotations mediums following the termination of a Commission trading suspension issued under Exchange Act Section 12(k).

[84] To rely on the exception for an unsolicited customer order, the order must represent an unsolicited indication of interest of a customer (other than a person acting as or for a dealer) of the broker-dealer submitting the order to the ATS.

[85] We have previously interpreted the Rule to require a broker-dealer that was publishing quotations in a particular interdealer quotation system to review issuer information before publishing quotations in another interdealer quotation system unless it relied upon an exemption. *See Letter re: OTC Bulletin Board Display Service* (December 20, 1993) (conditional exemption permitting broker-dealers that are currently publishing quotations in an interdealer quotation system to publish quotations in the OTC Bulletin Board without reviewing issuer information under the Rule); and *Letter re: OTC Bulletin Board; Modification of Exemption* (December 1, 1998) (modifying the exemption granted in 1993). Upon adoption of the reproposed amendments, we will rescind this interpretation and related exemptions.

[86] 17 CFR 240.17a–4. We will add new paragraph (b)(11).

[87] This proposed recordkeeping requirement was discussed by few commenters and generally was viewed favorably. *See e.g.,* NASAA Comment Letter.

[88] Broker-dealers publishing quotes for securities of exempt financial institutions may obtain the regulatory reports from the financial institution by contacting their primary bank regulatory agency. Broker-dealers can access the Federal Reserve System's National Information Center of Banking Information Internet website at <http://www.ffiec.gov/NIC>, the Office of the Comptroller of the Currency's Internet website at <http://www.occ.treas.gov>, which has information about individual nationally chartered banks, or the Federal Deposit Insurance Corporation's (FDIC) Internet website at <http://www.fdic.gov>, which provides the most recent Call Reports for all FDIC insured banks. Broker-dealers that access exempt financial institution information through these websites would be able to satisfy the Rule's requirements by recording their review and preserving the information in the same manner as for EDGAR information discussed above.

the broker-dealers are obligated to preserve such information pursuant to Rule 17a–4.

H. Transition and Exemptive Authority Provisions

We are reproposing the transition provision covering quotations by broker-dealers that were initiated prior to the effective date of the proposed amendments and, with a slight modification, the provision giving the Commission the authority to grant exemptions from the Rule.[89] These proposed provisions were viewed as adequate by the few commenters who discussed them.[90]

I. Information submitted to the NASD

Rule 15c2–11 currently requires any broker-dealer covered by the Rule to submit the information required under paragraph (a)(5) (*i.e.*, for non-reporting issuers) to the interdealer quotation system, in the form prescribed by the system, at least three business days before submitting a quotation for publication. We intend to amend this obligation by requiring broker-dealers to submit the information that they must review only to the NASD, in accordance with the NASD's rules.

The amendments are substantially the same as originally proposed, except for one change. Under the Proposing Release, a broker-dealer would be in compliance with the requirement to obtain current reports filed by a reporting issuer, if the broker-dealer obtained all current reports filed with the Commission by an issuer as of a date up to three business days before the earlier of the date the broker-dealer submitted the quotations to the quotation medium and the date the broker-dealer submitted information to the NASD. To reduce the chance that a broker-dealer would overlook a recently filed report containing material issuer information, we are proposing to eliminate the reference to the date the information was submitted to the NASD. This means that a broker-dealer would be required to obtain current reports filed by a reporting issuer after the broker-dealer had submitted information to the NASD, if such reports were filed more than three business days in advance of the publication of the quotation.

IV. General Request for Comments

We solicit comment on all aspects of the amendments to Rule 15c2–11, as well as on any other matter that might have an impact on the reproposal discussed above. In particular, we seek comment on the whether the reproposal will help focus the Rule on those securities and quotations most likely to be involved in microcap fraud. Commenters are requested to address whether there are other ways to amend the Rule that would help reduce fraud and manipulation in the OTC market. Commenters also are invited to address whether the Rule's text is sufficiently clear and understandable, or whether it can be simplified without sacrificing its purposes. We also request commenters to provide us with their views regarding whether the original proposal, or aspects of it, are preferable to the reproposal.

We encourage commenters to focus on the various provisions of the reproposal and bring to our attention any compliance or other specific issues that they may encounter if the reproposal is adopted. Commenters are urged to provide us with their views as expeditiously as possible so that we can complete our review of Rule 15c2–11.

V. Effects on Efficiency, Competition, and Capital Formation

Section 23(a)(2) of the Exchange Act requires the Commission, in adopting rules under the Exchange Act, to consider the anti-competitive effects of any rules it adopts thereunder, and to not adopt any rule that would impose a burden on competition not necessary or appropriate in the public interest.[91] Furthermore, Section 3(f) of the Exchange Act[92] requires the Commission, when engaged in rulemaking, to consider or determine whether an action is necessary or appropriate in the public interest, and whether the action will promote efficiency, competition, and capital formation.

We preliminarily believe that the reproposal would not have any anti-competitive effects that are not necessary or appropriate in the public interest. By applying the Rule to the first broker-dealer publishing any quotations for a security in a quotation medium and to other broker-dealers publishing priced quotations thereafter, the availability of information about issuers of covered OTC securities should be increased. This should help improve the level of competition among broker-dealers publishing priced quotations and enhance the extent of information about OTC issuers that is available to the investing public. Moreover, by excluding unpriced quotations from the Rule, anti-competitive burdens will be reduced because broker-dealers that cannot, or do not want to, obtain the specified information can still advertise their interest in buying or selling a particular OTC security in a quotation medium. Finally, the reproposal should have a beneficial impact on capital formation because microcap fraud ultimately increases the costs of raising capital for legitimate smaller issuers. Investors may be less willing to commit their resources if they are concerned about fraudulent activities in OTC securities.

We request comments on the benefits, as well as the adverse consequences, that may result with respect to efficiency, competition and capital formation, if the reproposal is adopted.

VI. Costs and Benefits of the Amendments

We request commenters to evaluate the costs and benefits associated with the amendments to Rule 15c2–11. We have identified certain costs and benefits relating to the reproposal, which are discussed below, and encourage commenters to discuss any additional costs or benefits. In particular, we request comments on the potential costs for any necessary modifications to information gathering, management, and reporting systems or procedures that would be necessary to implement the amendments, as well as any potential benefits resulting from the reproposal for issuers, investors, broker-dealers, securities industry professionals, regulators or others. Commenters should provide analysis and data to support their views on the costs and benefits associated with the amendments.

A. Benefits

Incidents of microcap fraud frequently involve issuers for which public information is limited.[93] Without information, it is difficult for investors, securities professionals, and others to evaluate the risks presented by these securities. Consequently, many investors fall prey to persons who make false representations and unrealistic predictions about these securities. The publication of quotations by broker-dealers can facilitate the fraudulent promotion of microcap securities.

In our view, the reproposal generally would improve the quality of the markets for securities subject to Rule 15c2–11 and would help protect

[89] The reproposal would provide the Commission with the authority to grant an exemption from the Rule for any quotation for a security or any class of security.

[90] *See, e.g.*, Florida Comment Letter.

[91] 15 U.S.C. 78w(a)(2).

[92] 15 U.S.C. 78c.

[93] *See, e.g.*, *SEC* v. *Global Financial Traders, Ltd.*, Litigation Release Nos. 15291 (March 14, 1997), and 15338 (April 17, 1997).

investors from fraudulent schemes involving these securities. The reproposal is focused on the OTC-quoted securities of smaller issuers. Absent the amendments, we believe that some broker-dealers would submit quotations without regard to basic information about relatively unknown issuers. In our view, when broker-dealers must review specified issuer information before publishing priced quotations, they are less likely to become unwitting participants in unlawful schemes of unscrupulous broker-dealers or promoters. Market makers in the securities of legitimate microcap issuers, as well as the issuers themselves, also would benefit from improving the integrity of this market sector. One benefit of the reproposal is that the scope of the Rule will be revised so that broker-dealers will not have to obtain information about those securities that satisfy any one the proposed alternative tests.

We also believe that the amendments will serve an important surveillance function. Currently, only the first broker-dealer quoting a security in a quotation medium must gather, review, and preserve the information. The amendments will require the first broker-dealer initiating any quotation and all broker-dealers initiating priced quotations thereafter to satisfy the Rule's information review requirements. Moreover, under NASD Rule 6740,[94] broker-dealers demonstrate their compliance with that rule by filing the Rule 15c2–11 information with the NASD. Recently, the review of Forms 211 filed with the NASD has resulted in a number of Commission trading suspensions and other enforcement actions.

The amendments require broker-dealers publishing quotes in compliance with the Rule to provide the information upon request to any customer, prospective customer, other broker-dealers, or information repository unless the information is available through a government sponsored database. This amendment will help make information about non-reporting issuers more widely available to the public.

We also believe that the amendments will ease significantly the Rule's recordkeeping requirement because broker-dealers will not have to retain information that is available on the Commission's EDGAR system or on the information systems of other federal or state authorities. Access to EDGAR and similar government-sponsored information systems is free on the Internet. Given that approximately 60% of securities on the OTC Bulletin Board and Pink Sheets are issued by reporting companies, whose reports are included on EDGAR, a significant recordkeeping cost savings to broker-dealers should result.

We do not have the data to quantify the value of the benefits described above. We seek comments on the value of these benefits and on any benefits, not already identified, that may result from the adoption of the amendments.

B. Costs

We anticipate that the elimination of the piggyback provision will create the most significant costs that the industry will incur. Currently, only those broker-dealers that publish quotations during the first 30 days of the security's trading are required to obtain and review the specified information before they initiate quotations. As reproposed, the Rule will continue to require the first broker-dealer, before initiating a priced or unpriced quotation for a covered OTC security in a quotation medium, to review the specified information. Thereafter, the reproposed Rule will impose the review requirement only on broker-dealers publishing priced quotations, including in connection with the annual review requirement. Of course, if the Commission suspends trading under Exchange Act Section 12(k) for any of the issuer's securities, the Rule's requirements are triggered.

The first broker-dealer, before initiating any quotation for a covered OTC security, is currently required to incur the cost of having to gather and review the issuer information. As a result of the amendments, that broker-dealer will incur the cost to update that information annually if it continues to publish priced quotations. Thereafter, any broker-dealer publishing priced quotations for a covered OTC security will incur costs when it first publishes a priced quotation and when it conducts the required annual review. To the extent a broker-dealer does not already have the required information, it will incur costs for the collection and review of this information. Moreover, a broker-dealer also will incur costs associated with creating the records required by the Rule and retaining the Rule's required information for the specified period of time under the amendment to Rule 17a–4.

We estimate that approximately 60% of the issuers of OTC stocks are reporting issuers, while the remaining 40% are non-reporting issuers. Based on this assumption, broker-dealers publishing priced quotations for the OTC securities of reporting issuers should be able to obtain the prescribed information required by the reproposed Rule from the Commission's EDGAR system and therefore should incur minimal costs to comply with the Rule. We believe that it will take a broker-dealer a maximum of 4 hours to collect, review, record, retain, and supply to the NASD the information pertaining to a reporting issuer, and a maximum of 8 hours to collect, review, record, retain, and supply to the NASD the information pertaining to a non-reporting issuer.[95] We estimate that it will cost a broker-dealer an average cost of $40 per hour (based on a blended compensation rate for clerical and supervisory compliance staff) to obtain and review the necessary information required by the Rule.[96]

We recently approved changes to NASD Rules 6539 and 6540 to limit the quotations on the OTC Bulletin Board to securities of issuers that are current in their reports filed with us or other regulatory authority, and to prohibit NASD members from quoting a security on the OTC Bulletin Board unless the issuer has made current filings with us.[97] While these NASD Rule changes may result in more issuers choosing to become reporting issuers in order to continue to qualify for quotation on the OTC Bulletin Board, we are at this time unable to adequately quantify the cost impact or burden that the reproposal imposes in relation to these rule changes. However, we believe that, generally, any increase in the number of reporting issuers subject to the Rule will cause a reduction in the number of the burden hours and associated costs. We are of the view that because reporting issuer information is readily available from the Commission's EDGAR system and, because we estimate that broker-dealers only have to spend 4 hours reviewing reporting issuer information, instead of the estimated 8 hours to review non-reporting issuer information, the reduced time spent reviewing issuer information will result in lower costs to broker-dealers.

However, broker-dealers publishing priced quotations for the OTC securities of non-reporting issuers are likely to incur greater costs in complying with

[94] *NASD Manual,* Marketplace Rules, Rule 6740.

[95] We computed these cost estimates after reviewing, among other sources, responses to a survey of broker-dealers conducted by the NQB about issues raised in the Proposing Release. The results of the NQB's survey are available in File No. S7–3–98 at the Commission's Public Reference Room, 450 Fifth Street N.W., Washington, D.C. 20549.

[96] The cost estimate assumes that clerical staff are paid at an average rate of $15 per hour and supervisory compliance staff are paid at an average rate of $100 per hour. The blended compensation rate assumes that 70% of the time is clerical and 30% is supervisory compliance [(0.7 × $15) + (0.3 × $100) = $40].

[97] *See* OTC Bulletin Board Release.

the Rule. For purposes of the Paperwork Reduction Act, we estimate the total burden hours for all broker-dealers to be 143,278 hours and the total cost to be $5,731,120. Some broker-dealers may not want to expend the time or the cost to obtain the non-reporting issuer information and may therefore choose not to publish priced quotes. On the other hand, the costs broker-dealers incur in obtaining and reviewing information about non-reporting issuers may be reduced if one or more on-line information repositories of this information are established. We seek comments on the reasonableness of these estimates for annual hourly and dollar costs to broker-dealers. We also seek comments on the extent to which these cost estimates will be affected by the new NASD rule to limit the OTC Bulletin Board to the securities of issuers current in their periodic filings.

Although Rule 15c2–11 does not regulate issuers, there may be some indirect costs imposed on issuers, particularly non-reporting issuers, because they may be contacted by broker-dealers to provide the information specified in the Rule. Non-reporting issuers would incur the cost of having to collect and provide the requested information to each requesting broker-dealer. However, we are assuming that non-reporting issuers maintain their financial information in compliance with prevailing accounting standards and, in most instances, would have available updated financial information prepared in accordance with generally accepted accounting principles (GAAP). The NASD has informed us that financial statements submitted with the Form 211 generally are prepared in accordance with GAAP, and many are audited.

Regarding start-up, operating, and maintenance costs, we believe that broker-dealers that collect, review, and retain the information currently required by the Rule, would incur only marginal start-up, operating, and maintenance costs (*i.e.*, to expand systems already in place) to comply with the Rule as reproposed. Further, some broker-dealers already may be collecting the required information for other purposes. However, we believe that some broker-dealers may not have adequate systems in place to retain issuer information and would, therefore, incur start-up, operating, and maintenance costs in order to comply with the requirements of the amendments.

We estimate that about 100 broker-dealers in the aggregate will incur start-up, operating, and maintenance costs of $100,000 ($1,000×100) associated with reporting issuer information, and $400,000 ($4,000×100) associated with non-reporting issuer information. Total start-up, operating and maintenance cost burden for broker-dealers is estimated to be $500,000 ($100,000+$400,000) or an average of $5,000 for each broker-dealer.

We assume that non-reporting issuers, because they generally maintain their financial information in compliance with prevailing accounting standards, will not incur any start-up costs to prepare the required information in response to broker-dealers' requests. We also believe that reporting issuers of covered OTC securities will not incur start-up costs as a result of the amendments since such issuers already provide the required information to the Commission under the federal securities laws. Therefore, we believe issuers will not incur start-up costs as a consequence of the adoption of the Rule amendments, as reproposed.

Finally, the Rule, as modified by the amendments, could affect the liquidity of some securities. If broker-dealers are unable to obtain the required issuer information, they would have to refrain from publishing priced quotations in that security. This could make it somewhat more difficult for investors to determine what prices other market participants are willing to bid or offer for the security, although they could call a broker-dealer publishing a name-only quotation to obtain a priced quotation. Thus, while investors are still able to obtain price information, the cost of obtaining this information may increase. However, under the reproposal, after the first quotation for a security is published, broker-dealers could publish unpriced quotes without complying with the Rule's provisions. In addition, broker-dealers could rely on the exception that permits them to publish quotes representing unsolicited customer orders.

Any effect on liquidity must be weighed against the benefit of reducing instances of fraud or manipulation. Greater investor access to information should result in more informed investor decisions and potentially could result in additional trading, and thus liquidity, for covered OTC securities. We have modified the proposals to permit broker-dealers to publish unpriced quotations for OTC securities without reviewing the specified information (other than the first broker-dealer to quote the security). This revision responds to the views of those commenters that expressed concerns about the Rule's impact on liquidity.

VII. Initial Regulatory Flexibility Act

We have prepared an Initial Regulatory Flexibility Analysis (IRFA)[98] regarding the amendments to Rule 15c2–11 and the reproposed companion amendment to Rule 17a–4 under the Exchange Act. The following summarizes the IRFA.

As discussed in the IRFA, the amendments specify the information that a broker-dealer must gather and review before publishing quotations for covered OTC securities. The reproposed Rule is intended to prevent broker-dealers from publishing quotations for covered OTC securities in a quotation medium without obtaining, reviewing, and retaining current information about the issuer. The reproposed Rule applies primarily to priced quotations.

The amendments to the Rule would affect all broker-dealers, including a number of small broker-dealers, seeking to publish quotations for covered OTC securities.[99] The number of small broker-dealers that publish quotations for covered OTC securities in quotation mediums is not known at this time. However, we recently estimated that about 13% of all registered broker-dealers would be characterized as small.[100] We estimate that, at any given time, there are approximately 400 broker-dealers, including small broker-dealers, that submit quotations for covered OTC securities. Therefore, based on this estimate, we believe that approximately 52 small broker-dealers (400×13%) would be affected by the amendments. In fact, it is possible that few, if any, broker-dealers publishing quotations for covered OTC securities would be classified as a small business, because as market makers they typically require more than $500,000 in capital to support their market making activities. In the Proposing Release, we solicited but did not receive any comments on the number of small broker-dealers that would be affected by the amendments. We are again soliciting comments on the number of small broker-dealers that would be affected by the amendments.

The amendments would indirectly have an impact on those small issuers that may be requested to provide the information required by the Rule to

[98] *See* 5 U.S.C. 603.

[99] For purposes of the regulatory flexibility analysis, a broker-dealer is considered ''small'' if its total capital is less than $500,000, and is not affiliated with a broker-dealer that has $500,000 or more in total capital.

[100] *See* Securities Exchange Act Release No. 40122 (June 24, 1998), 63 FR 35508 (adopting amendments to the definitions of ''small business'' or ''small organization'' under the Investment Company Act of 1940, the Investment Advisers Act of 1940, the Securities Exchange Act of 1934, and the Securities Act of 1933).

broker-dealers publishing quotations in those issuers' securities. Based on Exchange Act Rule 0–10(a), a small issuer is one that on the last day of its most recent fiscal year had total assets of $5,000,000 or less. In the Proposing Release, we solicited but did not receive any comments on the total number of issuers of covered OTC securities; the number (or percentages) of these issuers that are small issuers; and the total number (or percentage) of small issuers of covered OTC securities that are reporting and non-reporting issuers, respectively. We are again seeking comments on these issues.

The IRFA notes that the availability of the Commission's EDGAR system and similar systems sponsored by federal or state authorities should assist broker-dealers in collecting and reviewing the reports required by the Rule. In addition, the prevalent use of computers and the Internet, on which access to EDGAR is free, should also reduce the recordkeeping and compliance costs for all broker-dealers by automating the information collection and retention process.

The IRFA recognizes that the amendments indirectly affect certain issuers, particularly non-reporting issuers. The amendments would require the first broker-dealer to publish any quotation for a covered security to review the Rule's information. Thereafter, other broker-dealers must review information about the issuer when they first publish or resume publishing a priced quotation for a covered security, and all broker-dealers publishing priced quotations must conduct an annual review. We are not aware of any information repository, electronically accessible or otherwise, now in existence that covers all of the information about non-reporting issuers that broker-dealers must gather to comply with the Rule. Consequently, non-reporting issuers must collect and provide the required information to each requesting broker-dealer. We assume that non-reporting issuers maintain their financial information in compliance with generally accepted accounting standards and that the costs incurred by non-reporting issuers to prepare the necessary information in response to broker-dealers' requests would be minimal.

The IRFA discusses the kinds of possible alternative proposals that we have considered. These include, among others, creating differing compliance or reporting requirements or timetables that take into account the resources available to small entities, and whether such entities could be exempted from the reproposed rule, or any part thereof. Therefore, having considered the foregoing alternatives in the context of the amendments, we do not believe they would accomplish the stated objectives of the proposal.

We encourage the submission of written comments regarding any aspect of the IRFA. In particular, we seek comments on: (i) the number of small entities that would be affected by the amendments, including the number of small broker-dealers and issuers; (ii) the number of small entities that are issuers of covered OTC securities; and (iii) the number of small entities that are reporting and non-reporting issuers of covered securities, respectively. Comments should also specify the costs of compliance with the amendments, and suggest alternatives that would meet the objectives of the amendments in a more effective manner, while imposing costs equal to or less than the amendments. In describing the nature of any impact that the amendments would have, empirical data supporting these views should be provided.

For purposes of the Small Business Regulatory Enforcement Fairness Act of 1996, we are also requesting information regarding the potential impact of the proposed amendments on the economy on an annual basis. In particular, comments should address whether the proposed changes, if adopted, would have a $100,000,000 annual effect on the economy, cause a major increase in costs or prices, or have a significant adverse effect on competition, investment, or innovations. Commenters should provide empirical data to support their views.

Comments should be submitted in triplicate to Jonathan G. Katz, Secretary, Securities and Exchange Commission, 450 Fifth Street, NW, Washington, DC 20549. Comments may also be submitted electronically at the following E-mail address: rule-comments@sec.gov. All comment letters should refer to File No. S7–5–99; this file number should be included on the subject line if E-mail is used. Comment letters will be available for public inspection and copying in the Commission's Public Reference Room, 450 Fifth Street, NW, Washington, DC 20549. Electronically submitted comment letters will also be posted on the Commission's Internet website (http://www.sec.gov).

A copy of the Initial Regulatory Flexibility Analysis may be obtained by contacting Chester A. McPherson, Office of Risk Management and Control, Division of Market Regulation, Securities and Exchange Commission, 450 Fifth Street, NW, Washington, DC 20549, at (202) 942–0772.

VIII. Paperwork Reduction Act

Certain provisions of the amendments contain ''collection of information'' requirements within the meaning of the Paperwork Reduction Act of 1995 (PRA).[101] The title for the collection of information is: ''Publication or submission of quotations without specified information.'' Accordingly, the collection of information requirements contained in the Rule and the initial proposal were submitted to the Office of Management and Budget (OMB) for review, in accordance with 44 U.S.C. 3507(d) and 5 CFR 1320.11, and were approved by OMB. The Rule has been assigned OMB Control No. 3235–0202.[102]

A. Collection of Information Under the Amendments

As reproposed, the Rule would require the first broker-dealer, before initiating a priced or unpriced quotation for a covered OTC security in a quotation medium, to gather and review the issuer information, and to review updated information annually if it continues to publish priced quotations. This review requirement would also be imposed on any other broker-dealer publishing a priced quotation for a covered OTC security. Broker-dealers submitting priced quotations for the security would be required to collect, review, and retain the Rule's specified information annually. Broker-dealers would also have to record the sources of their information, the date their review occurred, and the person responsible for the review. Also, the proposals would require broker-dealers publishing quotations for a covered OTC security to collect, review, and retain more information than is required currently.

Under Rule 15c2–11, the information that is collected pursuant to the Rule must be submitted to the NASD at least three business days before any quotation is published.[103] Finally, the amendments would require broker-dealers to provide the information specified to any customer, prospective customer, other broker-dealer or information repository that requests it.

[101] 44 U.S.C. 3501 *et seq.*

[102] The Commission notes that a separate PRA filing was not prepared to reflect the proposed companion changes to Rule 17a–4. The burden hours and costs described for the Rule include and account for the anticipated burdens that may arise as a result of the proposed change to Rule 17a–4.

[103] The NASD has a rule requiring broker-dealers that initiate or resume quotations for covered equity securities to submit verification that they have collected the information necessary to comply with NASD requirements, as well as Rule 15c2–11. *See NASD Manual*, Marketplace Rules, Rule 6740.

B. Proposed Use of Information

Broker-dealers must collect and review the information required under the amendments if they publish the first quotation for a covered OTC security or if they publish priced quotations. Moreover, the Rule requires that broker-dealers have a reasonable basis for believing that the information about the issuer and related persons is accurate and from reliable sources. This information collection protects investors by deterring fraudulent or manipulative quotations for thinly-traded securities whose issuers are relatively unknown. Because information about these issuers is not widely disseminated and often is not current, fraudulent and manipulative schemes are easier to perpetrate. Moreover, this collection of information helps broker-dealers guard against becoming unwitting participants in fraudulent or manipulative schemes. The Rule 15c2–11 information gathering requirements also serve an important surveillance function for both the Commission and the NASD. Recently, the Commission has used the Rule 15c2–11 information to suspend trading in the issuers' securities pursuant to Section 12(k) of the Exchange Act where publicly available information about the issuer raised questions about the accuracy and adequacy of the issuers' disclosures.

C. Respondents

The amendments would apply to those broker-dealers that publish quotations for a covered OTC security in a quotation medium as of specified quotation events. The amendments also indirectly affect issuers that are asked by broker-dealers to provide this information. Most of the Rule 15c2–11 information that would be required for issuers that publicly file periodic reports with the Commission (reporting issuers) is available electronically on EDGAR or through the Internet. Thus, the reproposal is likely to have a greater paperwork burden when broker-dealers publish quotations for the securities of issuers that do not participate in the Commission's public reporting program, (*i.e.*, non-reporting issuers) or do not file reports with other federal or state regulatory authorities.

D. Total Annual Reporting and Recordkeeping Burden

The amendments would require broker-dealers to collect, review, retain, and record certain issuer and supplemental information when they are the first broker-dealer to quote the security; when they first publish priced quotations for a covered OTC security; and if they are publishing priced quotations as of the annual review requirement. The discussion below estimates the collection of information burden one year after the anticipated date of effectiveness of the amendments when broker-dealers that publish quotes for covered OTC securities qualifying for the reproposed transition provision must fully comply with the Rule's information requirements. The discussion below also provides estimates for the same period for issuers that may be contacted to provide the information. In particular, the following analysis measures the cost to broker-dealers of: (1) collecting, reviewing, recording, and retaining the required issuer information and supplying it to the NASD; (2) responding to requests for issuer information from customers, prospective customers, other broker-dealers and information repositories; and (3) starting up or maintaining systems for the collection and retention of issuer information. The analysis below also addresses the indirect cost to issuers who must furnish information to requesting broker-dealers.

1. Burden-Hours for Broker-Dealers

Based on information provided by the NASD and NQB, we estimate that as of December 31, 1998, there were approximately 6,625 covered OTC securities quoted in the OTC Bulletin Board and 3,225 quoted in the Pink Sheets for a total of 9,850 covered OTC securities.[104] We also believe that approximately 10% (985) of these securities would not be subject to the Rule, based on the exceptions that are included in this reproposing Release and that approximately 8,865 securities would be subject to the Rule. According to NASD estimates, we also believe that approximately 1,400 new applications from broker-dealers to initiate or resume publication of covered equity securities in the OTC Bulletin Board and/or the Pink Sheets or other quotation mediums were approved by the NASD for the 1998 calendar year. We have estimated that 60% of the covered OTC securities were issued by reporting issuers, while the other 40% were issued by non-reporting issuers. We also estimate that broker-dealers publish priced quotations for approximately 90% of the covered OTC securities quoted in the OTC Bulletin Board and publish priced quotes for about 10% of the covered OTC securities quoted in the Pink Sheets. According to NASD and NQB estimates, we believe that, on average, there are approximately 4.3 broker-dealers publishing priced quotations for each covered OTC security, and that at any given time there are no more than 400 broker-dealers that submit priced quotations for covered OTC securities. Finally, the reproposed Rule's transition provision would not subject the broker-dealers quoting the securities of the estimated 8,865 potentially covered securities currently quoted in the OTC Bulletin Board and/or the Pink Sheets until the annual review requirement is triggered. Therefore, only those new applications that are submitted after the reproposal becomes effective would be subject to the initial review requirement.

Because the amendments would require the first broker-dealer publishing a quotation, priced or unpriced, for a particular security to collect issuer information, we believe that during the first year after the amendments are effective, broker-dealers that are publishing the first quotations (whether priced or unpriced) for covered OTC securities in the aggregate would have to conduct approximately 1,260 initial reviews of issuer information.[105] We believe that it will take a broker-dealer about 4 hours to collect, review, record, retain, and supply to the NASD the information pertaining to a reporting issuer, and about 8 hours to collect, review, record, retain, and supply to the NASD the information pertaining to a non-reporting issuer.

We therefore estimate that after the reproposal has become effective, the broker-dealers who are the first to publish the first quote for a covered OTC security of a reporting issuer (priced or unpriced) will require 3,024 hours (1,260×60%×4) to collect, review, record, retain, and supply to the NASD the information required by the Rule as reproposed. We estimate that after the reproposal has become effective the broker-dealers who are the first to publish the first quote for a covered OTC security of a non-reporting issuer (priced or unpriced) will require 4,032 hours (1,260×40%×8) to collect, review, record, retain, and supply to the NASD the information required by the Rule as reproposed. We therefore estimate the total annual burden hours for the first broker-dealers to be 7,056 hours (3,024+4,032).

The Rule also would require an annual review for broker-dealers

[104] We recognize that there may be covered OTC securities quoted in other quotation mediums, but at this time we do not have the empirical data to include them in our estimations.

[105] This estimate is based on the assumption that the NASD will, in the first year after the reproposal becomes effective, approve 10% fewer Form 211 filings than the 1,400 applications approved in 1998.

publishing priced quotations for covered OTC securities. We have estimated that each issuer is quoted by about 4.3 broker-dealers. We are assuming that of the universe of approximately 8,865 potentially affected covered OTC securities, broker-dealers would publish priced quotations for approximately 90% of the OTC Bulletin Board securities or 5,366 securities ((6,625×90%)×90%) and for 10% of the Pink Sheet securities or 290 securities (3,225×90%)×10%).[106] Therefore, we estimate that priced quotations will be published for approximately 5,656 (5,366+290) covered OTC securities. Given that about 60% of OTC stocks are issued by reporting issuers and the other 40% by non-reporting issuers, and that it would take a broker-dealer 4 and 8 hours, respectively, to meet the requirements of the reproposed Rule for these issuers, we estimate the burden hours as follows: for reporting issuers we estimate approximately 58,375 hours (3,394×4.3×4), and for non-reporting issuers we estimate approximately 77,847 hours (2,263×4.3×8). Therefore, we estimate the total annual paperwork burden hours for all broker-dealers to be 143,278 hours (7,056+58,375+77,847).

2. Burden-Hours for Issuers

Regarding the burden on issuers to provide broker-dealers with the required information, we believe that the 5,319 issuers of covered OTC securities (based on our estimate that 60% of the 8,865 potentially covered OTC securities are reporting issuers) will not bear any additional hourly burdens under the amendments because these issuers already report the required information to the Commission through mandated periodic filings. Further, reporting issuer information is widely available to broker-dealers through a variety of media. However, non-reporting issuer information is not widely available. Consequently, these issuers must provide the information required by the amendments to requesting broker-dealers before quotations in their securities can be published. We believe that the 3,546 issuers of non-reporting covered OTC securities (based on an estimate that 40% of the 8,865 potentially covered OTC securities are non-reporting) will spend an average of 9 hours each to collect, prepare, and supply the information required by the proposals to the first broker-dealer that requests this information. Thereafter, we estimate that it will take an average of 1 hour for an issuer to provide the same information to the remaining 3.3 broker-dealers that request the information. Accordingly, we estimate the 3,546 non-reporting issuers annually will incur 31,914 hours (3,546×9×1) to comply with the first broker-dealer's request for information, and 11,702 hours (3,546×1×3.3) to comply with the subsequent 3.3 broker-dealer requests for an annual total of 43,616 burden hours (31,914+11,702). On average, therefore, each non-reporting issuer would spend approximately 12.3 burden hours (43,616/3,546) per year to comply with these requests.

3. Total Burden-Hour Costs to Broker-Dealers and Issuers

We estimate the collection of information will require approximately 186,894 burden hours annually (143,278 + 43,616) from approximately 3,946 respondents (400 broker-dealers and 3,546 issuers).

4. Capital Cost to Broker-Dealers and Issuers

We believe that broker-dealers that now collect, review, and retain the information required by the current Rule will not incur any significant start-up costs to expand systems already in place. Further, broker-dealers that are collecting the information required by the proposals for other purposes also will not incur significant start-up costs. However, we believe some broker-dealers may not have adequate systems in place to retain issuer information and will incur start-up costs in order to comply with the requirements of the amendments. We assume that of the 400 broker-dealers that provide quotations for covered OTC securities, about 100 broker-dealers will incur additional start-up costs, while the remaining 300 broker-dealers will only incur incremental costs. Because the information for reporting issuers will be generally available on EDGAR and such availability satisfies the recordkeeping requirements of the proposals, we are assuming that the start-up costs associated with retaining information on reporting issuers will average $1,000 per broker-dealer, whereas the same costs will be $4,000 per broker-dealer for non-reporting issuer information. We estimate that broker-dealers in the aggregate will incur start-up, operating, and maintenance costs of $100,000 ($1,000 × 100) associated with reporting issuer information, and $400,000 ($4,000 × 100) associated with non-reporting issuer information. Total start-up, operating and maintenance cost burden for broker-dealers is estimated to be $500,000 ($100,000 + $400,000) or an average of $5,000 for each broker-dealer.

We assume that non-reporting issuers, because they maintain their financial information in compliance with prevailing accounting standards, will not incur any start-up costs to prepare the required information in response to broker-dealers' requests. We also believe that reporting issuers of covered OTC securities will not incur start-up costs as a result of the amendments since such issuers already provide the required information to the Commission under the federal securities laws. Therefore, we believe issuers will not incur start-up costs as a consequence of the adoption of the Rule amendments, as reproposed.

E. General Information About the Collection of Information

The collection of information under the amendments is mandatory and would be required at periodic intervals: by the first broker-dealer to publish any quote for a covered OTC security, by broker-dealers publishing priced quotes thereafter, and by broker-dealers publishing priced quotes at the time of the annual review requirement. Broker-dealers would be required to retain the information they collect for a period of not less than three years. Information collected under the Rule would not be kept confidential. Any agency may not conduct or sponsor, and a person is not required to respond to, a collection of information unless it displays a currently valid control number.

F. Request for comments

Pursuant to 44 U.S.C. 3506(c)(2)(B), we are soliciting comments to:

(i) evaluate whether the reproposed collection of information is necessary for the proposed performance of the functions of the agency, including whether the information will have practical utility;

(ii) evaluate the accuracy of our estimates of the burden of the reproposed collection of information;

(iii) enhance the quality, utility, and clarity of the information to be collected; and

(iv) minimize the burden of collection of information on those who are to respond, including through the use of automated collection techniques or other forms of information technology. We seek data about quotations for covered OTC securities in OTC quotation mediums other than the OTC Bulletin Board and the Pink Sheets. We seek comments on our estimate of the number of issuers affected by the reproposed Rule and on the time estimates made for broker-dealers and

[106] Some securities have priced quotations published in both of these quotation systems. To avoid double counting, such securities are counted as OTC Bulletin Board securities.

issuers to comply with the information collection requirements.

Persons desiring to submit comments on the collection of information requirements should direct them to the Office of Management and Budget, Attention: Desk Officer for the Securities and Exchange Commission, Office of Information and Regulatory Affairs, Room 10102, New Executive Office Building, Washington, DC 20503, and should also send a copy of their comments to Jonathan G. Katz, Secretary, Securities and Exchange Commission, 450 Fifth Street, NW, Washington, DC 20549, and refer to File No. S7–5–99. OMB is required to make a decision concerning the collections of information between 30 and 60 days after publication of this release in the **Federal Register**, so a comment to OMB is best assured of having its full effect if OMB receives it within 30 days of this publication.

IX. Statutory Basis and Text of Proposed Amendments and Rule

The rule amendments are being proposed pursuant to Sections 3, 10(b), 15(c), 15(g), 17(a), and 23(a) of the Securities Exchange Act of 1934, 15 U.S.C. §§ 78c, 78j(b), 78o(c), 78o(g), 78q(a), and 78w(a).

List of Subjects in 17 CFR Part 240

Broker-dealers, Fraud, Reporting and recordkeeping requirements, Securities.

Text of Reproposed Rule

In accordance with the foregoing, Title 17, chapter II, part 240 of the Code of Federal Regulations is proposed to be amended as follows:

PART 240—GENERAL RULES AND REGULATIONS, SECURITIES EXCHANGE ACT OF 1934

1. The authority citation for part 240 continues to read, in part, as follows:

Authority: 15 U.S.C. §§ 77c, 77d, 77g, 77j, 77s, 77z–2, 77eee, 77ggg, 77nnn, 77sss, 77ttt, 78c, 78d, 78f, 78i, 78j, 78j–1, 78k, 78k–1, 78*l*, 78m, 78n, 78o, 78p, 78q, 78s, 78u–5, 78w, 78x, 78*ll*(d), 78mm, 79q, 79t, 80a–20, 80a–23, 80a–29, 80a–37, 80b–3, 80b–4 and 80b–11, unless otherwise noted.

* * * * *

2. Section 240.15c2–11 and the section heading are revised to read as follows:

§ 240.15c2–11 Publication or submission of quotations without current information.

Preliminary Note: As a means reasonably designed to prevent fraudulent, deceptive, or manipulative acts or practices, this section prevents a broker or dealer from publishing a quotation for a security or, directly or indirectly, submitting a quotation for a security for publication in a quotation medium, unless the broker or dealer complies with the provisions of this section or relies on an exception contained in paragraph (h) of this section. As used in this section, the term ''you'' refers to a broker or dealer.

(a) *When a broker or dealer must comply with this section.* You must comply with paragraph (b) of this section when you publish:

(1) The first quotation for a security;

(2) The first quotation following the termination of a Commission trading suspension ordered pursuant to section 12(k) of the Act (15 U.S.C. 78*l*(k)) in any security of the issuer of the suspended security;

(3) Your first quotation at a specified price for the same security after another broker or dealer publishes the first quotation for a security as described in paragraph (a)(1) or (a)(2) of this section;

(4) A quotation at a specified price for a security after a period of five or more consecutive business days when you did not publish any quotations at a specified price for that security;

(5) Your first quotation at a specified price for a security after the date that is four months after the end of the issuer's fiscal year, unless the issuer is a foreign private issuer; or

(6) Your first quotation at a specified price for a security of a foreign private issuer after the date that is seven months after the end of the issuer's fiscal year.

(b) *The steps a broker or dealer must take to comply with this section.* For each security in which you publish any of the quotations listed in paragraph (a) of this section, you must:

(1) Review the issuer information described in paragraph (c) of this section and the supplemental information described in paragraph (d) of this section;

(2) Determine that you have a reasonable basis under the circumstances for believing that the issuer information described in paragraph (c) of this section, when considered in conjunction with the supplemental information described in paragraph (d) of this section, is accurate in all material respects and was obtained from reliable sources;

(3) Make a record of:

(i) The issuer information described in paragraph (c) of this section, the supplemental information described in paragraph (d) of this section, and the sources from which you obtained the information. You will be considered to have obtained the issuer information described in paragraphs (c) or (d)(1) of this section if you obtained it through the EDGAR system, any other federal or state electronic information system, or an electronic information system operated by an information repository, and you have the means to access the information for the period required under § 240.17a–4(b)(11);

(ii) Any significant relationship information described in paragraph (e) of this section;

(iii) The date that you reviewed the information described in paragraphs (c), (d), and (e) of this section; and

(iv) The person responsible for your compliance with the requirements of this section; and

(4) Preserve the records required to be made under paragraph (b)(3) of this section in accordance with § 240.17a–4(b)(11).

(c) *The issuer information that a broker or dealer must review.* The type of information that is considered ''issuer information'' and that must be reviewed under paragraph (b) of this section depends on the status of the issuer.

(1) *Issuers with a recent public offering.* If the issuer filed a registration statement under the Securities Act (other than a registration statement on Form F–6 (17 CFR 239.36)) that became effective less than 90 calendar days before you publish the quotation, and that is not the subject of a stop order, the issuer information is the prospectus specified by section 10(a) of the Securities Act (15 U.S.C. 77j(a)).

(2) *Issuers with a recent Regulation A offering.* If the issuer filed a notification under Regulation A under the Securities Act (17 CFR 230.251 through 230.263) and was authorized to commence the offering less than 40 calendar days before you publish a quotation, and the offering circular provided for under Regulation A is not the subject of a suspension order, the issuer information is the offering circular.

(3) *Certain reporting issuers.* If the issuer is current in filing annual or semi-annual reports required under section 13 or 15(d) of the Act (15 U.S.C. 78m or 78o(d)) or section 30(a) of the Investment Company Act of 1940 (15 U.S.C. 80a–29(a)), the issuer information is the issuer's most recent annual or semi-annual report and any quarterly and current reports filed by the issuer after such annual or semi-annual report. You will be considered in compliance with the requirement to obtain current reports filed by the issuer if you obtain all current reports filed by that issuer as of the date that is three business days before you publish the quotation. However, until the issuer has filed its first annual or semi-annual report, the issuer information is:

(i) The prospectus specified by section 10(a) of the Securities Act (15

U.S.C. 77j(a)) that was included in a registration statement filed by the issuer under the Securities Act and that became effective within the prior 15 months; or

(ii) The registration statement filed by the issuer under section 12 of the Act (15 U.S.C. 78l) that became effective within the prior 15 months (other than a registration statement on Form F–6 (17 CFR 239.36)), and any quarterly and current reports filed by the issuer after the registration statement became effective.

(4) *Certain financial institutions.* If the issuer is not required to file reports under sections 13 or 15(d) of the Act and is a bank or savings association, as those terms are defined in 12 U.S.C. 1813, the issuer information is the issuer's most recent annual report and any subsequent reports filed with the issuer's appropriate Federal banking agency or State bank supervisor, as those terms are defined in 12 U.S.C. 1813.

(5) *Certain exempted insurance companies.* If the issuer is exempt from section 12(g) of the Act (15 U.S.C. 78*l*(g)) by complying with section 12(g)(2)(G) of the Act (15 U.S.C. 78*l*(g)(2)(G)), the issuer information is the issuer's most recent annual statement referred to in section 12(g)(2)(G)(i) of the Act (15 U.S.C. 78*l*(g)(2)(G)(i)).

(6) *Other issuers.* If the issuer is not covered by paragraphs (c)(1) through (c)(5) of this section, the issuer information is the information listed below in paragraphs (c)(6)(i) through (c)(6)(xiii) of this section. Except as specified in paragraph (c)(6)(xiii) of this section, this information is presumed to be current if it is as of a date within 12 months before you publish the quotation and must be the most current information that you know or have reason to know is available:

(i) The exact name of the issuer and any predecessor;

(ii) The address and telephone number of the issuer's principal executive offices;

(iii) The state of incorporation of the issuer, if it is a corporation;

(iv) The date on which the issuer's fiscal year ends;

(v) For each class of the issuer's securities outstanding:

(A) The exact title of the security;

(B) The par or stated value of the security;

(C) The number of securities or total principal amount outstanding of the security;

(D) The class and number of securities issuable upon the security's exercise, exchange or conversion, if applicable; and

(E) The total number of securityholders of record for the security as of the end of the issuer's most recent fiscal year or a more recent date;

(vi) The exact title and class of the security to be quoted;

(vii) The name, address and telephone number of the transfer agent;

(viii) A description of the issuer's business and facilities;

(ix) A description of the issuer's products or services;

(x) The full names and business addresses of the executive officers, directors, general partners, promoters, and control persons of the issuer, and the number of securities of each class of the issuer's securities that are beneficially owned by each such person as of the end of the issuer's last fiscal year or a more recent date;

(xi) The following information:

(A) A description of any of the following actions to which any executive officer, director, general partner, promoter, or control person of the issuer has been the subject during the prior five years:

(*1*) A conviction in a criminal proceeding or named as a defendant in a pending criminal proceeding (excluding traffic violations and other minor offenses);

(*2*) The entry of an order, judgment, or decree, not subsequently reversed, suspended or vacated, by a court of competent jurisdiction that permanently or temporarily enjoins, bars, suspends or otherwise limits involvement in any type of business, securities, commodities, or banking activities;

(*3*) A finding or judgment by a court of competent jurisdiction (in a civil action), the Commission, the Commodity Futures Trading Commission, or a state securities regulator of a violation of federal or state securities or commodities law, which has not been reversed, suspended, or vacated; and

(4) The entry of an order by a self-regulatory organization that permanently or temporarily bars, suspends or otherwise limits involvement in any type of business or securities activities; or

(B) A statement from the issuer that no executive officer, director, general partner, promoter, or control person of the issuer is the subject of any of the actions listed in paragraphs (c)(6)(xi)(A)(*1*) through (*4*) of this section; or

(C) A description of the steps you have taken to obtain from the issuer the information needed to comply with paragraphs (c)(6)(xi)(A) or (c)(6)(xi)(B) of this section and a statement that the issuer failed or refused to provide this information;

(xii) The following information:

(A) A description of any of the following events involving the issuer, its predecessor, or any of its majority-owned subsidiaries that occurred in the prior two years:

(*1*) A change in control;

(*2*) An increase of 10% or more of the same class of outstanding equity securities;

(*3*) A merger, acquisition, or business combination;

(*4*) An acquisition or disposition of significant assets;

(*5*) A bankruptcy proceeding; and

(*6*) The delisting of securities by any securities exchange or Nasdaq; or

(B) A statement from the issuer that the issuer, its predecessor, and its majority-owned subsidiaries have not been the subject of any of the actions or events listed in paragraphs (c)(6)(xii)(A)(*1*) through (*6*) of this section; or

(C) A description of the steps you have taken to obtain from the issuer the information needed to comply with paragraphs (c)(6)(xii)(A) or (c)(6)(xii)(B) of this section and that the issuer failed or refused to provide this information; and

(xiii) The financial information listed below in paragraphs (c)(6)(xiii)(A) or (c)(6)(xiii)(B) and (c)(6)(xiii)(C) of this section:

(A) If the issuer is not a foreign private issuer, the issuer's most recent balance sheet, statement of cash flows, statement of comprehensive income, and statement of operations (income), prepared in accordance with U.S. generally accepted accounting principles. Unless you know or have reason to know that more current information is available, this information will be presumed to be current if:

(*1*) The balance sheet is as of a date that is less than 15 months before you publish the quotation;

(*2*) The statement of cash flows, statement of comprehensive income, and statement of operations (income) are for the 12 months preceding the date of such balance sheet; and

(*3*) If the balance sheet is as of a date that is more than 6 months before you publish the quotation, it must be accompanied by an additional statement of cash flows, statement of comprehensive income, and statement of operations (income) for the period from the date of such balance sheet to a date that is less than 6 months before you publish the quotation.

(B) If the issuer is a foreign private issuer, the issuer's most recent balance

sheet and statement of operations (income), and to the extent prepared by the issuer, statement of cash flows, statement of comprehensive income, and statement of changes in shareholders' equity, prepared in accordance with a comprehensive body of accounting principles. Unless you know or have reason to know that more current information is available, this information will be considered current if:

(*1*) The balance sheet is as of a date that is less than 18 months before you publish the quotation;

(*2*) The statement of cash flows, statement of comprehensive income, statement of operations (income), and statement of changes in shareholders' equity are for the 12 months preceding the date of such balance sheet; and

(*3*) If the balance sheet is as of a date that is more than 9 months before you publish the quotation, it must be accompanied by an additional statement of cash flows, statement of comprehensive income, statement of operations (income), and statement of changes in shareholders' equity for the period from the date of such balance sheet until a date that is less than 9 months before you publish the quotation, if any such statements have been prepared by the issuer.

(C) The same financial information required by paragraph (c)(6)(xiii)(A) and (B) of this section for such part of the two preceding fiscal years as the issuer or any predecessor has been in existence (one year with respect to the balance sheet), prepared in accordance with U.S. generally accepted accounting principles (or prepared in accordance with a comprehensive body of accounting principles in the case of a foreign private issuer). However, if the issuer has emerged from reorganization pursuant to Chapter 11 of the Bankruptcy Code (11 U.S.C. 1101 *et seq.*) and the reorganization plan has been in effect less than two years, the financial information required under this paragraph (c)(6)(xiii) is the court-approved disclosure statement filed under 11 U.S.C. 1125 and the financial information described in this paragraph (c)(6)(xiii) from the date of the entry of the bankruptcy court order confirming the issuer's reorganization plan pursuant to 11 U.S.C. 1129.

(d) *The supplemental information that a broker or dealer must review.* The type of information that is considered ''supplemental information'' and that you must review under paragraph (b) of this section is the following:

(1) A copy of any trading suspension order issued by the Commission under section 12(k) of the Act (15 U.S.C. 78*l*(k)) for any securities of the issuer or its predecessor (if any) during the 12 months before you publish the quotation, or a copy of the public release issued by the Commission announcing such trading suspension order; and

(2) A copy or a written record of any other material information (including adverse information) about the issuer that comes to your knowledge or possession before you publish a quotation.

(e) *The significant relationship information that the broker or dealer must make and keep a record of.* The type of information that is considered ''significant relationship'' information and that you must make and keep a record of under paragraph (b) of this section is the following:

(1) Any direct or indirect affiliation between the issuer and you or between the issuer and any of your associated persons;

(2) Whether you are publishing the quotation on behalf of any other broker or dealer, or any of its associated persons, and, if so, the name of such broker or dealer, or the associated person, and the terms of the arrangement;

(3) Whether you have received, or have any arrangement to receive, any monetary or other consideration from any person for publishing the quotation and, if so, a description of the consideration and the name of the person providing the consideration; and

(4) Whether you are publishing the quotation directly or indirectly on behalf of the issuer, or any executive officer, director, general partner, promoter, control person, or any person, who is directly or indirectly the beneficial owner of more than 10 percent of the outstanding units or shares of any equity security of the issuer, and, if so, the name of such person, and the basis for any exemption under the federal securities laws for any sales of such securities on behalf of such person.

(f) *The information a broker or dealer must submit to the NASD.* At least three business days before you publish a quotation covered by paragraph (a) of this section, you must submit to the NASD, in accordance with NASD rules, the information required in paragraphs (c), (d), and (e) of this section.

(g) *The broker or dealer must make certain information required by this section available upon request.*

(1) If you publish a quotation for a security in compliance with this section, you must make the issuer, supplemental, and significant relationship information specified in paragraphs (c)(5), (c)(6), (d), and (e) of this section promptly available upon request to any customer, prospective customer, other broker or dealer, or information repository. By providing this information to others under this paragraph (g), you do not represent that the information is accurate; rather, you represent that, as of the date recorded under paragraph (b)(3)(iii) of this section, you had a reasonable basis under the circumstances for believing that the information was accurate and current in all material respects and was obtained from reliable sources; but

(2) You do not need to comply with paragraph (g)(1) of this section to the extent that the information is reasonably available through EDGAR, any other federal or state electronic information system, or an information repository.

(h) *When a broker or dealer is not required to comply with this section.* You are not required to comply with this section when you publish a quotation for:

(1) A security that is listed on a national securities exchange or Nasdaq; is traded on such exchange or Nasdaq on the same day as, or on the business day immediately before, the day you publish the quotation; and is not suspended, terminated, or prohibited from trading on such exchange or Nasdaq;

(2) An exempted security, as defined in section 3(a)(12) of the Act (15 U.S.C. 78c(a)(12));

(3) A security where the quotation represents the unsolicited order of a customer (other than a person acting as or for a dealer);

(4) A non-convertible debt security or a non-participatory preferred stock;

(5) An asset-backed security that is rated by at least one nationally recognized statistical rating organization, as that term is used in § 240.15c3–1, in one of its generic rating categories that signifies investment grade;

(6) A security with a worldwide average daily trading volume value of at least $100,000 during each month of the six full calendar months immediately before the date you publish the quotation;

(7) A convertible security, if the underlying security meets the requirements of paragraph (h)(6) of this section;

(8) A security that has bid price, as published on a national securities exchange, Nasdaq, or quotation medium, of at least $50 per share. If the security is a unit composed of one or more securities, the bid price of the unit divided by the number of shares of the unit that are not warrants, options,

rights, or similar securities must be at least $50; or

(9) A security of an issuer that has net tangible assets in excess of $10,000,000.

(i) *The steps to take to become an information repository.*

(1) An entity seeking information repository designation must file an application with the Director of the Commission's Division of Market Regulation in Washington, DC. The application should provide detailed information explaining how the entity satisfies the attributes set forth in paragraph (i)(2) of this section. The entity must also file any additional information relating to the attributes set forth in paragraph (i)(2) of this section that the Director of the Commission's Division of Market Regulation subsequently requests;

(2) In determining whether to designate an entity as an information repository, the Commission will consider whether the entity:

(i) Collects information about a substantial segment of issuers of securities subject to this section;

(ii) Maintains current and accurate information about such issuers;

(iii) Has effective acquisition, retrieval, and dissemination systems;

(iv) Places no inappropriate limits on the issuers from or about which it will accept information;

(v) Provides access to the documents deposited with it to anyone willing and able to pay the applicable fees;

(vi) Charges reasonable fees; and

(vii) In general, is so organized and has the capacity to be able to reasonably carry out the purposes of this section.

(3) An information repository must notify the Director of the Commission's Division of Market Regulation of any material changes that occur in the facts and circumstances of its application for such designation; and

(4) In the event it is determined that an information repository no longer satisfies all of the attributes set forth in paragraph (i)(2) of this section, the Director of the Commission's Division of Market Regulation may revoke such designation.

(j) *The definitions applicable to this section.* For purposes of this section, the following definitions apply:

(1) *Alternative trading system* has the same meaning contained in § 242.300(a) of this chapter.

(2) *Asset backed security* has the meaning contained in General Instruction I.B.5. to Form S–3 (17 CFR 239.13).

(3) *Information repository* means an entity that:

(i) Gathers and provides to brokers or dealers and others current issuer information described in paragraph (c) of this section when this information is not routinely or widely made available, electronically or otherwise; and

(ii) Is designated by the Commission as an information repository as described in paragraph (i) of this section.

(4) *Issuer,* in the case of quotations for American Depositary Receipts, means the issuer of the deposited shares represented by such American Depositary Receipts.

(5) *NASD* means the National Association of Securities Dealers, Inc., and its wholly owned subsidiaries (including, but not limited to, NASD Regulation, Inc. and The Nasdaq Stock Market, Inc.).

(6) *Nasdaq* means The Nasdaq National Market and The Nasdaq SmallCap Market, both operated by The Nasdaq Stock Market, Inc.

(7) *Net tangible assets* means total assets less intangible assets and liabilities. For purposes of this section, net tangible assets must be demonstrated by current financial statements, as described in paragraph (c)(6)(xiii) of this section, and:

(i) If the issuer is not a foreign private issuer, the financial statements must be audited and reported on by an independent public accountant in accordance with § 210.2–02 of this chapter; or

(ii) If the issuer is a foreign private issuer, the financial statements must be prepared in accordance with a comprehensive body of accounting principles, audited in compliance with requirements of the country of incorporation, and reported on by an accountant duly registered and in good standing in accordance with the regulations of that jurisdiction.

(8) *Non-participatory preferred stock* means non-convertible capital stock, the holders of which are entitled to a preference in payment of dividends and in distribution of assets on liquidation, dissolution, or winding up of the issuer, but are not entitled to participate in residual earnings or assets of the issuer.

(9) *Promoter* has the same meaning contained in § 230.405 of this chapter.

(10) *Publish* means to publish a quotation for a security in a quotation medium or, directly or indirectly, to submit a quotation for a security for publication in a quotation medium.

(11) *Quotation* means any bid or offer at a specified price with respect to a security, or any indication of interest by a broker or dealer in receiving bids or offers from others for a security, or any indication by a broker or dealer that advertises its general interest in buying or selling a particular security.

(12) *Quotation medium* means any:

(i) System of general circulation to brokers or dealers that regularly disseminates quotations of identified brokers or dealers; or

(ii) Publication, alternative trading system, or other device that is used by brokers or dealers to disseminate quotations to others.

(13) *Securities Act* means the Securities Act of 1933 (15 U.S.C. 77a *et seq.*).

(k) *How this section applies to securities for which a broker or dealer is publishing quotations immediately before the effective date of the amendments.* If you were publishing a quotation for a security on the business day immediately before April 7, 1999, you may continue to publish quotations for the security without complying with paragraph (b) of this section until you publish a quotation described in paragraphs (a)(2), (a)(3), (a)(4), (a)(5), or (a)(6) of this section.

(l) *The Commission can grant exemptions from this section.* This section does not prohibit the publication of any quotation for a security or a class of securities, if the Commission, on written request or its own motion, exempts such quotation, either unconditionally or on specified terms and conditions.

3. Section 240.17a–4 is amended by adding paragraph (b)(11) to read as follows:

§ 240.17a–4 Records to be preserved by certain exchange members, brokers and dealers.

* * * * *

(b) * * *

(11) The records required to be obtained pursuant to § 240.15c2–11.

* * * * *

Dated: February 25, 1999.

By the Commission.

Margaret H. McFarland,

Deputy Secretary.

Note: This Appendix to the Preamble will not appear in the Code of Federal Regulations.

Appendix

Guidance on the Scope of a Broker-Dealer's Review Under Current Rule 15c2–11 and the Amendments

I. Introduction

To assist broker-dealers in complying with Rule 15c2–11 (Rule)[1] under the Securities Exchange Act of 1934 (Exchange Act),[2] we are setting forth the factors that they should consider in carrying out their review obligations

[1] 17 CFR 240.15c2–11.

[2] 15 U.S.C. 78a *et seq.*

under the Rule as it currently exists and under the amendments proposed in Securities Exchange Act Release No. 34–41110.[3] We are providing this guidance because commenters on the initial proposal[4] expressed concerns about their review obligations under its provisions, particularly in light of elimination of the piggyback provision, the addition of an annual review requirement, and the obligation to obtain enhanced issuer information. This guidance applies, unless otherwise noted, to a broker-dealer's obligations under the current Rule as well as under the reproposal.

Rule 15c2–11 regulates the publication of quotations for OTC securities in a quotation medium.[5] The Rule generally prohibits broker-dealers from publishing a quotation unless they have reviewed specified information about the issuer. The kind of information depends on the nature of the issuer, *e.g.*, whether the issuer is subject to the Exchange Act's periodic reporting requirements (reporting issuer) or is an issuer that is not subject to the Exchange Act's reporting requirements (non-reporting issuer). Broker-dealers must also have a reasonable basis for believing that the issuer information, when considered in conjunction with any supplemental information,[6] is accurate in all material respects and that it was obtained from a reliable source.

The Rule is precise about the kind of issuer and other information that the broker-dealer must obtain and review before publishing quotations and about how current that information must be. However, some commenters on the Proposing Release stated that they were unclear about the nature of the broker-dealer's obligation to determine that the broker-dealer reasonably believes that the source of the Rule 15c2–11 information is reliable and that the information is accurate in all material respects. We are giving our views on the steps a broker-dealer should take to assess the reliability of the source of the required information and the accuracy of that information.[7]

II. Quotation Events Triggering the Review Requirement

Under the current Rule, the first broker-dealer to publish a priced quotation must obtain and review the Rule's required information. Under the current Rule's piggyback exception, a broker-dealer does not have to satisfy these information requirements when it publishes a quotation for a security if it, or any other broker-dealer, is already publishing regular quotations for the security.[8] This means that the first market maker publishing a quotation is the only one that has to obtain the required information, and thereafter, any other market maker can publish quotations in the security indefinitely, unless there is a significant lapse in quotation activity.[9]

The amendments will restructure Rule 15c2–11 by setting forth more clearly the quotation events that trigger the Rule, the requirements that the broker-dealer must satisfy, and the nature of the information that the broker-dealer must review. The amendments state that no broker-dealer, directly or indirectly, may publish the described kinds of quotations for a security in any quotation medium, without first complying with the Rule's provisions.[10] Under the amendments, the Rule will apply at specified points in time, namely, when a broker-dealer publishes:

- the first quotation for a security;
- its first quotation at a specified price for a security after another broker or dealer published the first quotation for the same security.
- the first quotation following the termination of a Commission trading suspension ordered pursuant to section 12(k) of the Exchange Act[11] in any security of the issuer of the suspended security;
- a quotation at a specified price for a security after a period of five or more consecutive business days when it did not publish any quotations at a specified price for that security;
- its first quotation at a specified price for a security after the date that is four months after the end of the issuer's fiscal year, unless the issuer is a foreign private issuer; or
- its first quotation at a specified price for a security of a foreign private issuer after the date that is seven months after the end of the issuer's fiscal year.

If the Rule applies, under both the current Rule and the amendments, the broker-dealer must:

- review the Rule's specified information;
- determine that it has a reasonable basis for believing that the information is accurate in all material respects and was obtained from reliable sources;
- Record the date it reviewed the specified information, the sources of the information, and the person at the firm responsible for the broker-dealer's compliance with the Rule; and
- Preserve the specified information in accordance with Rule 17a–4.[12]

We set out below in more detail the review obligation required of a broker-dealer before it publishes a quotation for covered OTC securities. In general, the broker-dealer must first form a reasonable belief about the source's reliability. Then the broker-dealer should examine the materials to make sure it has obtained all of the information required by the Rule, including any supplemental information known by the broker-dealer. In reviewing this information, the Rule requires that the broker-dealer must have a reasonable basis under the circumstances for believing that the issuer information described in paragraph (a) [reproposed paragraph (c)] of the Rule,[13] when considered in conjunction with the supplemental information described in paragraph (b) [reproposed paragraph (d)] of the Rule,[14] is accurate in all material

[3] This appendix sets forth guidance on a broker-dealer's review obligations under the Rule as it currently exists and under the proposed amendments. If the Commission takes final action on the proposed amendments, the Appendix will be revised to delete references to the proposal and to reflect the final rule. We expect that the Appendix will provide useful guidance to broker-dealers in conducting the document review required by the Rule.

[4] Securities Exchange Act Release No. 39670 (February 17, 1998), 63 FR 9661 (Proposing Release).

[5] A quotation is broadly defined as any indication that a broker-dealer is willing to buy or sell a particular security. The reproposed Rule, however, applies most directly to priced quotations. Rule 15c2–11 applies to broker-dealers that publish quotations for securities traded in the OTC markets. In this appendix, ''OTC stocks'' or ''OTC securities'' refers to securities that are not listed on a national securities exchange or Nasdaq. ''Covered OTC securities'' refers to those OTC securities that are subject to Rule 15c2–11. Rule 15c2–11 applies to securities quoted on the OTC Bulletin Board, operated by the National Association of Securities Dealers, Inc. (NASD); the Pink Sheets operated by the National Quotation Bureau, Inc. (NQB); and similar quotation systems.

[6] *See* footnote 14 below for a description of ''supplemental information.''

[7] This discussion confirms and supplements earlier guidance on Rule 15c2–11 issues. *See* Securities Exchange Act Release No. 29094 (April 17, 1991), 56 FR 19148 (1991 Adopting Release); Securities Exchange Act Release No. 27247 (September 14, 1989), 54 FR 39194 (1989 Proposing Release).

[8] 17 CFR 240.15c2–11(f)(3). The security must have been the subject of quotations on at least 12 business days during the previous 30 calendar days, with no more than 4 consecutive business days elapsing without a quotation. Effectively, the Rule applies only to those market makers publishing quotations during the first 30 days of a security's trading. The ability to piggyback on one's own quotations is referred to as ''self-piggybacking.''

[9] The piggyback exception would be eliminated under the proposed amendments.

[10] The current Rule applies to an *interdealer quotation system*, which is a quotation medium of general circulation to brokers or dealers which regularly disseminates quotations of identified brokers or dealers. 17 CFR 240.15c2–11(e)(2). Under the proposed amendments, the definition of ''interdealer quotation system'' would be incorporated into the definition of ''quotation medium.'' Under the amendments, a ''quotation medium'' will be a system of general circulation to brokers or dealers that regularly disseminates quotations of identified brokers or dealers; or publication, alternative trading system, or other device that is used by brokers or dealers to disseminate quotations to others.]

[11] 15 U.S.C. 78*l*(k).

[12] 17 CFR 240.17a–4.

[13] Currently, a broker-dealer must review and maintain in its records certain issuer information, which, depending on the issuer, may include prospectuses or offering circulars; certain Exchange Act reports; other regulatory filings; information furnished to the Commission pursuant to Section 12(g)(2)(G)(i) of the Exchange Act; or certain financial information for non-reporting issuers. The amendments expand the information required for issuers that do not file periodic reports with the Commission (*e.g.*, non-reporting issuers). In addition, broker-dealers would be required to make the issuer information available to anyone who requested it.

[14] In addition to a copy of any trading suspension order issued by the Commission pursuant to Exchange Act Section 12(k), the broker-dealer must record and consider any other material information (including adverse information) regarding the issuer that comes to its knowledge or possession before publishing a quotation under the Rule. Paragraph (b) [reproposed paragraph (d)] does not require a broker-dealer to maintain trivial information or information from an uncertain source. Also, the

respects and was obtained from reliable sources.

In addition, we are providing numerous examples of ''red flags'' often associated with Rule 15c2–11 documents. A red flag is information that under the circumstances signals that one or more of the required items of information may be materially inaccurate. We consider these red flags to be indications that should lead a broker-dealer to inquire whether it had a reasonable basis to believe that the issuer information is accurate in all material respects and that it was obtained from a reliable source.

The red flags that we discuss have been present in Commission enforcement actions, examinations conducted by our staff, and reviews of Rule 15c2–11 conducted by the National Association of Securities Dealers, Inc. (NASD) submissions, but our discussion is not meant to be exhaustive. Other information may come into the broker-dealer's knowledge or possession that would lead it to question whether the source is reliable or whether the required information is accurate in all material respects. The adequacy of a broker-dealer's review must be considered on a case-by-case basis.

The reproposed Rule would require a broker-dealer to obtain and review some issuer information not required by the current Rule, such as criminal or securities law violations and additional issuer information. Until the proposal is adopted, the Rule does not require the broker-dealer to obtain and review this information. This information, however, would be a red flag and, under the current Rule, could be ''material information'' that the broker-dealer must take into account when conducting its review obligations.

III. The Review Process

A. Introduction

While the broker-dealer must obtain and review the required information, the standard of review is based on a broker-dealer's arriving at a reasonable belief, not a certainty, that the information is accurate and was obtained from a reliable source. Although broker-dealers often refer to their Rule 15c2–11 files as ''due diligence'' files, the Rule's standard of review does not approach the depth of inquiry generally associated with an underwriter's obligations in a registered public offering or with a retail broker's obligations in recommending a security to a customer. As discussed below, the scope of review is relatively simple in the case of an issuer that has just completed a public offering or an offering under Regulation A [15] or that files periodic reports with the Commission.[16] In these cases, the broker-dealer must obtain and review information that is on file with the Commission, in addition to any supplemental information. In the case of a non-reporting issuer, where there may be no information filed with a regulatory authority, the broker-dealer must obtain the required information from sources its deems reliable and must review this information together with any supplemental information.

The Rule does not currently specify the status of the person who must conduct the review on the broker-dealer's behalf. Under the reproposed Rule, the broker-dealer must make a record of the person at the firm who is responsible for the broker-dealer's compliance with the Rule's provisions.[17] Generally, the person performing the review should have sufficient experience or authority at the firm to make sure that the Rule's requirements are fully satisfied.

Rule 15c2–11 is intended to prevent broker-dealers from becoming involved in the fraudulent manipulation of OTC securities. However, even if a broker-dealer technically complies with the Rule's requirements, it would be subject to liability under other antifraud provisions of the securities laws, such as Rule 10b–5, if a broker-dealer publishes quotations as part of a fraudulent or manipulative scheme.[18]

B. Source Reliability

1. Determining Whether a Source is Reliable

The broker-dealer must first have a reasonable basis for believing that Rule 15c2–11 information comes from a reliable source. In general, this means that the information was derived from the issuer. If the information is from the issuer or its officers and directors, attorney, or accountant, the broker-dealer generally can assume that the source is reliable, absent red flags to the contrary.[19] If the information is from EDGAR or another governmental website or an independent retrieval service [20] or standard research sources [21] or an information repository contemplated under the reproposed Rule, the broker-dealer can satisfy the Rule's requirement to have a reasonable basis for believing that the source of the information is reliable. If the broker-dealer receives the information from an independent and objective source, such as a bank that is not a market maker in the security, which represents that it has prepared the information or received the information directly from the issuer, the broker-dealer typically may rely on that representation as to the source. Because broker-dealers frequently obtain the Rule 15c2–11 information from these sources, the reliability of the information's source is not often called into question.

Occasionally, the broker-dealer may obtain the Rule 15c2–11 information from sources not associated with the issuer, such as another market maker.[22] In this case, the requesting broker-dealer should inquire about the original source of the information. The broker-dealer providing the information must make a record of the source of the issuer information and can supply this information to the requesting broker-dealer.

When a red flag regarding the source's reliability exists, the broker-dealer must inquire further to reasonably determine whether the information's source is reliable. To satisfy the Rule's requirements, the broker-dealer must ascertain the original source of the information, especially when a broker-dealer is provided information from another broker-dealer that encourages the publication of quotations rather than responds to a request for information.[23] If the broker-dealer providing the information refuses to substantiate that the information is from the issuer, this refusal is a red flag that may indicate that the source is unreliable. If the broker-dealer is told that the issuer has prepared or approved the information, the broker-dealer may need to verify that representation by directly contacting the issuer.

2. Examples of Unreliable Sources

The Report of Investigation Regarding Transactions in the Securities of Laser Arms Corporation (Laser Arms Report) illustrates when a broker-dealer did not have a reasonable basis to believe that the information about a non-reporting issuer was from a reliable source.[24] The Laser Arms Report noted that ''inherent in the requirement of paragraph (a)(5) [reproposed paragraph (c)(6)] is 'the premise that the broker-dealer must at least verify that it has received the required information and know that source of the information.'' [25]

The broker-dealer that submitted the initial application to quote Laser Arms stock did not make any attempt to verify the source of the issuer information contained in the Laser Arms Memorandum. In fact, it was a fictitious document prepared by a recidivist securities law violator who was the

---

broker-dealer is not required to affirmatively seek out information about the issuer beyond that specifically required by the Rule. However, if material information about the issuer comes to its knowledge or possession (orally or in writing), the broker-dealer must take that information into account in assessing whether the issuer information is accurate and is from a reliable source. *See* footnote 35 below regarding how to obtain information about Commission trading suspensions.

[15] 17 CFR 230.251–230.263.

[16] Under the reproposal, the broker-dealer can look to filings made with other federal or state regulatory authorities for certain types of issuers, *e.g.*, financial institutions.

[17] *See* text of reproposed Rule 15c2–11(b)(3)(iv).

[18] 17 CFR 240.10b–5.

[19] Because of recent microcap fraud cases involving promoters, a broker-dealer should not presume a promoter is a reliable source of issuer information. *See SEC Charges 44 Stock Promoters in First Internet Securities Fraud Sweep*, Press Release 98–117 (October 28, 1998) available at <http://www.sec.gov/news/press/98–117.txt>.

[20] Examples of an ''independent retrieval service'' would be the SEC's Public Reference Room or a document retrieval service.

[21] Examples of ''standard research sources'' include publications such as Standard & Poor's Standard Corporation Manual and Moody's Investors Service Manuals.

[22] The proposed Rule will require a broker-dealer to provide the information to another broker-dealer upon request.

[23] *See Bunker Securities, Inc.*, 48 S.E.C. 859 (1987), *aff'd without opinion*, 833 F.2d 303 (3d Cir. 1987).

[24] 50 S.E.C. 489 (1991). The Laser Arms Report was issued pursuant to the investigative authority granted to the Commission under Section 21(a) of the Exchange Act (15 U.S.C. 78u(a)).

[25] Laser Arms Report at 501, *citing* Securities Exchange Act Release No. 34–29095 (April 17, 1991), 56 FR 19158 (1991 Proposing Release).

undisclosed principal of Laser Arms.[26] The broker-dealer's immediate source of the Laser Arms Memorandum was a trader at another broker-dealer whom he had known for less than one year, had seen on only a few occasions, and had dealt with primarily by telephone. The broker-dealer did not review or attempt to determine the source of any part of the information in the Laser Arms Memorandum. Any attempt to contact the issuer directly probably would have led to the discovery that Laser Arms was a shell corporation with no assets, operations, or products.[27] Under these circumstances, the Commission did not believe that this broker-dealer, or any of the broker-dealers to subsequently publish quotations, had a reasonable basis for believing that the source of the Rule 15c2–11 information was reliable.[28]

C. Document Review Obligations

Once the broker-dealer has formed a reasonable belief about the source's reliability, it should examine the materials to make sure it has obtained all of the information required by the Rule. This means that a broker-dealer must not only review the information about the issuer of the security to be quoted but also consider any supplemental information.[29] The Rule requires that the broker-dealer must have a reasonable basis under the circumstances for believing that the issuer information described in paragraph (a) [reproposed paragraph (c)] of the Rule, when considered in conjunction with the supplemental information described in paragraph (b) [reproposed paragraph (d)] of the Rule, is accurate in all material respects.

Unlike the duties of an underwriter in a securities offering, Rule 15c2–11 ordinarily does not require a broker-dealer to conduct an independent inquiry about the issuer of the security to be quoted. A broker-dealer publishing quotes for a covered OTC security may have no relationship with the issuer, and the Rule does not demand that the broker-dealer develop one to obtain information. However, the broker-dealer must review the required information, together with any supplemental information that comes to its attention, and should be alert to red flags.

Because documents filed with the Commission are subject to liability provisions, a broker-dealer generally can reach a reasonable belief as to the accuracy of information contained in these documents.[30] This also would be true for documents filed with financial institutions' regulatory authorities, which broker-dealers may obtain and review when publishing quotes for the securities of certain banks, provided for in paragraph (c)(4) of the reproposed Rule.

If a registration statement incorporates other documents by reference, the broker-dealer may be required to obtain some of the incorporated documents to satisfy the Rule's information gathering and review requirements. It should not be necessary for the broker-dealer to be familiar with all aspects of the filed documents. The broker-dealer should focus on those sections that describe the items of information set forth in Rule 15c2–11(a)(5) [reproposed Rule 15c2–11(c)(6)], the issuer's identified ''risk factors,''[31] any recent material business combinations, such as the merger of a reporting shell into a non-reporting company, and current financial information.

In contrast to information from other kinds of issuers, non-reporting issuer information generally has not been filed with any regulatory authority. Thus, the broker-dealer cannot make any assumptions about the accuracy of such information. Similarly, a broker-dealer cannot make any assumptions about the accuracy of information to documents and other materials that are submitted to the Commission by foreign private issuers under Rule 12g3–2(b). Although they are submitted to the Commission, these documents are not ''filed'' and so are not subject to the liabilities that attach to reporting issuer information. These documents are prepared in accordance with the standards of the issuer's home jurisdiction, not the standards set forth under the U.S. federal securities laws, and broker-dealers should independently assess the accuracy of such information. Broker-dealers will also need to independently assess the accuracy of information filed with foreign securities regulatory authorities, based on considerations such as the disclosure and liability standards under foreign law. In reviewing the Rule's required information for non-reporting issuers, the kinds of significant events that require a domestic reporting issuer to file a Form 8–K under the Exchange Act[32] also should be considered red flag events.

Where no red flags appear during the review of current and complete information, the broker-dealer would have a reasonable basis for believing that the Rule's information is accurate. At this point, the broker-dealer's review ordinarily would end, *i.e.*, the broker-dealer would not be required to question the financial statements or any other information required to be obtained and reviewed. The Rule does not require the broker-dealer to question any information unless the information contains apparent material discrepancies, or other information in the broker-dealer's knowledge or possession (*i.e.*, paragraph (b) [reproposed paragraph (d)] information) reasonably indicates that the paragraph (a) [reproposed paragraph (c)] information is materially inaccurate.

When red flags are present, the broker-dealer's efforts to satisfy itself with respect to the accuracy of the information will vary with the circumstances and may require the broker-dealer to obtain additional information or seek to verify existing information. If the broker-dealer is aware that the required issuer information is materially inaccurate, it may nevertheless publish quotations without violating the Rule, as long as the broker-dealer can supplement that information with additional information that the broker-dealer reasonably believes is accurate. If the immediate source of the issuer information is unreliable, however, the broker-dealer should view that source with skepticism and attempt to obtain the Rule's information from another source. For example, a broker-dealer that is aware that the required issuer information is inaccurate could produce a written record reflecting the additional, corrected information or could obtain other materials, such as a more recent Form 8–K,[33] that would permit the broker-dealer to comply with the Rule. If the broker-dealer sees that the auditor's report in an issuer's financial statements is qualified, the broker-dealer may need to contact the accountants about the basis for such qualification. If the broker-dealer learns that an issuer's control person has been convicted of securities fraud, it should contact the appropriate regulatory authority to ascertain the facts.[34]

The Rule's provisions are triggered by discrete quotation events. Once the broker-dealer has complied with the Rule's requirements with respect to a particular quotation event, there is no continuing duty to obtain and review the information. Of course, when a quotation event occurs, *e.g.*, the broker-dealer is publishing priced quotations as of the annual review date

[26] The Laser Arms Memorandum misrepresented Laser Arms as a high technology weapons manufacturer and the developer of a self-chilling beverage can. The memorandum also included forged certificates of incorporation, fictitious balance sheets, and auditor's report which the signature of the accountant had been forged.

[27] Another broker-dealer who attempted to call Laser Arms learned there was no telephone listing for the company. This broker-dealer nevertheless initiated a market in Laser Arms' securities.

[28] *See also Bunker Securities, Inc.*, 48 S.E.C. 859 (1987, *aff'd without opinion*, 833 F.2d 303 (3d Cir. 1987).

[29] *See* footnote 14 above for a definition of supplemental information.

[30] *See* Sections 11 and 27 of the Securities Act, 15 U.S.C. 77k and 77x, and Sections 18 and 32 of the Exchange Act, 15 U.S.C. 78r and 78ff. *See* 1991 Adopting Release, 56 FR 19148, 19150 (1991).

[31] If the issuer's registration statement, pursuant to Item 401 of Regulation S–K, describes criminal or other disciplinary proceedings involving a reporting issuer's officer, director, general partner, promoter, or control person, this would be a red flag. Reproposed Rule 15c2–11(c)(6)(xi) will require broker-dealers to inquire about these types of criminal or other disciplinary proceedings involving a non-reporting issuer's office, director, general partner, promoter, or control person. Under the current Rule, however, a broker-dealer's knowledge of criminal or other disciplinary proceedings involving a reporting or non-reporting issuer's officer, director, general partner, promoter, or control person would be a red flag.

[32] 17 CFR 249.308.

[33] 27 CFR 249.308.

[34] Even thought he criminal and securities law violations specified in reproposed paragraph (c)(6)(xi) are not specified in paragraph (a)(5) of the current Rule, a broker-dealer's knowledge of such information would be material adverse information under the current rule, and such violations would be a red flag.

required by the reproposed Rule, it must conduct a review of current issuer information. In this case, the review process would be the same as described above. However, the review process should be somewhat simpler because the broker-dealer would already have gained some familiarity with the issuer as a result of its prior review.

D. Scope of Review Following a Trading Suspension

A Commission trading suspension is a material event affecting the market for an issuer's securities.[35] After the termination of a trading suspension, a broker-dealer may not enter a quotation unless and until it has strictly complied with all the provisions of the Rule. Before initiating or resuming a quotation for securities subject to Rule 15c2–11, the broker-dealer must conduct a careful review in a professional manner of the basis for the trading suspension to determine whether there is a reasonable basis for the broker-dealer to believe that the information about the issuer is accurate and current. The broker-dealer may be unable to reach a reasonable basis for relying on the questioned financial statements in the Commission's order even if the information otherwise satisfies the Rule's presumption of ''current'' information.[36] This presumption is obviated if the broker-dealer has information to the contrary.[37]

The broker-dealer must also check the reliability of the source of the information, particularly when the same source is providing updated information. If the broker-dealer seeks assurances or additional information from the source (in most cases, the issuer) about the matters cited in the Commission trading suspension order, great caution should be used before relying on the statements or assurances from the issuer. The broker-dealer may have to test the accuracy of the information or the source's reliability by conducting an independent review or obtaining verification of information provided by the issuer. The broker-dealer may need to seek an opinion of an independent accountant or attorney to form a reasonable basis to believe that the Rule's information is accurate and from a reliable source. In one enforcement action, a broker-dealer unreasonably relied on pre-suspension financial statements when the Commission's trading suspension was based upon a lack of accurate financial information and the issuer's auditors indicated to the broker-dealer that they were having problems verifying the issuer's financial information.[38]

A broker-dealer may have difficulty obtaining the necessary information about an issuer after the expiration of a trading suspension. This difficulty, however, does not relieve the broker-dealer of its responsibilities under the Rule. If any broker-dealer is uncertain as to what is required by the Rule, it should refrain from entering quotations relating to the securities in question until the Rule's provisions have been met.

IV. Examples of Red Flags

If the broker-dealer discovers at any stage of the review process any red flags in the issuer information (whether the issuer is a reporting or non-reporting company), it cannot publish a quote unless and until those red flags are reasonably addressed. Material inconsistencies in the paragraph (a) [reproposed paragraph (c)] information, or material inconsistencies between that information and the paragraph (b) [reproposed paragraph (d)] information, are red flags. We have set out below examples of red flags that we have noticed in microcap fraud cases or in Rule 15c2–11 submissions made to the NASD. These examples, however, are not comprehensive, as red flags depend on the facts and circumstances of each case.

We are providing examples of red flags that require additional scrutiny by the broker-dealer to comply with Rule 15c2–11. These examples, however, are not exhaustive. Conversely, the presence of these or other red flags is not necessarily an indication of microcap fraud or even inaccurate issuer information. The red flag simply means that the broker-dealer should question whether the issuer information is accurate, and in certain cases, from a reliable source. The more red flags that are present, the more a broker-dealer should scrutinize the issuer information.

1. *Commission Trading Suspensions.* As indicated above, Commission trading suspension orders generally raise significant red flags as to whether the Rule 15c2–11 information is accurate and whether its source is reliable. Broker-dealers publishing quotes once a trading suspension terminates must satisfy the Rule's requirements, which may include seeking verification from the issuer or soliciting the views of an independent professional.

2. *Foreign Trading Suspensions.* A trading suspension by a foreign regulator may indicate that the issuer information is unreliable or inaccurate. However, a trading suspension in a foreign market may be imposed simply because the issuer failed to meet exchange listing standards. If the broker-dealer learns of a foreign trading suspension, it should attempt to determine the basis for the suspension order and assess whether the issuer information is still accurate and whether its source is still reliable.

3. *Concentration of ownership of the majority of outstanding, freely tradeable stock.* Concentration of ownership of freely tradeable securities is a prominent feature of microcap fraud cases. When one person or group controls the flow of freely tradeable securities, this person or persons can have a much greater ability to manipulate the stock's price than when the securities are widely held. In a ''pump and dump'' scheme, retail interest is stimulated, and the price of the securities is manipulated upward, at the behest or under the control of the manipulators who control much of the stock. Often, other broker-dealers that are not intentionally participating in improper activities publish quotations in response to escalating demand for the security resulting from increasing retail sales. The promoters of these companies, company insiders, and unscrupulous brokers make substantial profits when they sell their shares at inflated prices. When the scheme is over, the security's price plummets, and innocent investors who paid a premium price are left holding worthless shares.[39]

4. *Large reverse stock splits.* Microcap fraud schemes can involve the substantial concentration of the publicly-traded float through a reverse stock split. The subsequent issuance of large amounts of stock to insiders increases their control over both the issuer and trading of the stock.[40]

5. *Companies in which assets are large and revenue is minimal without any explanation.* A red flag exists when the issuer assigns a high value on its financial statements to

[35] *See* Section 12(k) of the Exchange Act. Information regarding recent trading suspension orders can be obtained by calling 800–SEC–0330. The broker-dealer must obtain a copy of the trading suspension order or a copy of the Commission release announcing the trading suspension. Copies of Commission releases may be obtained through our Internet website at <http://www.sec.gov/enforce/tsuspend.htm> or from the Commission's Public Reference Room in Washington, D.C. and in regional Commission offices. Also, Commission releases are available form information databases (*e.g.*, LEXIS), and also are published in the SEC Docket, which is available from publication services (*e.g.*, Commerce Clearing House, Inc.).

[36] The reproposal contains a presumption that the financial information of both reporting issuers and domestic and foreign non-reporting issuers is current if it is less than 15 months old. However, if the broker-dealer has other information that indicates that the issuer's financial condition has materially changed from that shown in the financial statements, this presumption may not apply, and the broker-dealer should determine whether more recent financial information is available. Financial information older than 15 months is not current and does not satisfy the Rule's requirements.

[37] *General Bond & Share Co.*, 51 S.E.C. 411 (1993) (Commission opinion), *rev'd on other grounds, General Bond & Share Co.* v. *SEC*, 39 F.3d 1451 (10th Cir. 1994); *See also Robin Rushing and Harold Gallison, Jr.*, Securities Exchange Act Release No. 36910 (February 29, 1996).

[38] *Robin Rushing and Harold Gallison, Jr.*, Securities Exchange Act Release No. 36910 (February 29, 1996); *see also Bagle Securities, Inc.*, Securities Exchange Act Release No. 27673 (February 5, 1990); *William V. Frankel & Company*, Securities Exchange Act Release No. 27649 (January 26, 1990); *Richfield Securities, Inc.*, Securities Exchange Act Release No. 26129 (September 29, 1988).

[39] *See New Allied Development Corporation*, Securities Exchange Act Release No. 37990 (November 26, 1996)(New Allied's control persons had substantial stock interest in nominee accounts); *Douglass and Co., Inc.*, 46 S.E.C. 1189 (1978); *Gotham Securities Corporation*, 46 S.E.C. 723 (1976). Paragraph (c)(6)(x) of the reproposed Rule will require disclosure of the beneficial ownership of the issuer's stock by its executive officers, directors, general partners, promoters, or control persons.

[40] Emshwiller, ''Reverse Stock Splits At Many Firms Spark Outcry.'' *The Wall Street Journal*, November 20, 1998, at Cl; *SEC* v. *Magna Technologies, Inc.*, Litigation Release No. 12227 (August 21, 1989) (insiders of Magna effected a 4-for-1 reverse stock split, concentrated ownership in themselves, and then manipulated the price of Magna's stock by disseminating false and misleading information).

certain assets that are often unrelated to the company's business and were recently acquired in a non-cash transaction. In this situation, the company's revenues often are minimal and there appears to be no valid explanation for such large assets and minimal revenues.[41]

Also, a red flag is present when the financial statements of a development stage issuer list as the principal component of the issuer's net worth an asset wholly unrelated to the issuer's line of business. For example, from a review of Rule 15c2–11 submissions, art collections or other collectibles that are unrelated to the issuer's business apparently have been overvalued on the financial statements of some issuers.[42] While assets that are unrelated to the business of the issuer are not always an indication of potential microcap fraud, some unscrupulous issuers have overvalued these types of assets in an effort to inflate their balance sheets.

6. *Shell corporation's acquisition of private company.* A shell corporation is characterized by no business operations and little or no assets. In a fraud scheme, a reporting company with a large number of shares controlled by one person or a small number of persons often merges with a non-reporting company having some business operations. The new public company is then used as the vehicle for ''pump and dump'' and other fraudulent schemes. Broker-dealers placing quotes for these issuers' securities should be mindful of the potential for abuse.[43]

7. *Offerings under Rule 504 of Regulation D where one or more of the following factors are present:*

- Little capital is raised in the Rule 504 offering and there appears to be no business purpose except to provide some shareholders with free-trading shares;
- The Rule 504 offering is preceded by an unregistered offering to insiders or others for services rendered at prices well below the price in the subsequent offering;
- Sales immediately following the Rule 504 offering are at substantially higher prices than those paid in the Rule 504 offering; or
- A shell company and an operating company merge, which results in the operating entity becoming the surviving entity. The surviving entity goes ''public'' by issuing shares pursuant to Rule 504.[44]

Rule 504 of Regulation D allows non-reporting companies to raise up to $1 million per year in ''seed capital'' without complying with Securities Act registration requirements. The freely tradable nature of securities issued in Rule 504 offerings has facilitated a number of fraudulent schemes through the OTC Bulletin Board Display Service (OTC Bulletin Board) or the Pink Sheets published by the National Quotation Bureau, Inc. (NQB).[45] Broker-dealers should be alert to information in the Rule 15c2–11 materials where an active trading market is being promoted for securities issued solely in a Rule 504 transaction.

8. *A registered or unregistered offering raises proceeds that are used to repay a bridge loan made or arranged by the underwriter where:*

- The bridge loan was made at a high interest rate for a short period;
- The underwriter received securities at below-market rates prior to the offering; and
- The issuer has no apparent business purpose for the bridge loan.

Broker-dealers have given small issuers bridge loans at a high interest rate for a short time period.[46] In exchange for this bridge loan, the broker-dealer receives a significant number of shares of the issuer's common stock at a price that is substantially below market rates. The broker-dealer then engages in a scheme to manipulate the stock's price and ultimately benefits when it dumps the stock at an artificially high price.[47]

9. *Significant write-up of assets upon a company obtaining a patent or trademark for a product.* The significant write-up of assets upon the issuer's obtaining a patent or trademark for a product is a technique used by issuers engaged in microcap fraud to inflate their balance sheets.[48]

10. *Significant asset consists of OTC Bulletin Board or Pink Sheet companies.* We have noticed that some microcap fraud schemes involve issuers whose major assets are substantial amounts of shares in other OTC Bulletin Board or Pink Sheet companies.

11. *Assets acquired for shares of stock when the stock has no market value.* In microcap fraud cases, the issuer's financial statements often indicate that the issuer acquired assets to which it assigned substantial value in exchange for its essentially worthless stock.[49]

12. *Significant write-up of assets in a business combination of entities under common control.*

Those persons engaged in microcap fraud often use a business combination such as a merger as an opportunity to falsify financial statements.[50] We have seen microcap fraud schemes in which unscrupulous issuers use purchase method accounting[51] to write up the historical value of an asset to an artificially high value in situations when the entities involved in the business combination are under common control or otherwise have a high degree of common ownership. For example, Generally Accepted Accounting Principles (GAAP) requires that the acquisition of one entity by another entity be accounted for at historical cost in a manner similar to that in ''pooling of interests'' accounting when these entities are under common control.[52]

13. *Unusual auditing issues.*

- Auditors refuse to certify financial statements or they issue a qualified opinion; or
- There has been a change of accountants.[53]

---

[41] *New Allied Development Corporation,* Securities Exchange Act Release No. 37990 (November 26, 1996).

[42] *See In the Matter of Rom N. De Guzman,* Securities Exchange Act Release No. 37747 (September 30, 1996).

[43] *See New Allied Development Corporation,* Securities Exchange Act Release No. 37990 (November 26, 1996); *Stylex Homes, Inc.,* Securities Exchange Act Release No. 36299 (September 29, 1995); *Bunker Securities, Inc.,* 48 S.E.C. 859 (1987), *aff'd without opinion,* 833 F. 2d 303 (3d Cir. 1987); *Butcher & Singer, Inc.,* 48 S.E.C,. 640, *aff'd without opinion,* 833 F. 2d 303 (ed Cir. 1987); *Douglass and Co., Inc.,* 46 S.E.C. 1189 (1978); *A.J. Carno Co., 1976 SEC LEXIS 2764 (February 23, 1976) (initial decision), order dismissing proceeding and withdrawing broker-dealer registration,* Securities Exchange Act Release No. 14647 (April 10, 1978); *Gotham Securities Corporation,* 46 S.E.C. 723 (1976).

[44] See example 16, above.

[45] *See* Securities Act Release No. 33–7644 (February 19, 1999) in which we adopted amendments to Rule 504 of Regulation D that limit the circumstances where general solicitation is permitted and ''freely tradeable'' securities may be issued in reliance on Rule 504 to transactions (1) registered under state law requiring public filing and delivery of a disclosure document to investors before sale, or (2) exempted under state law permitting general solicitation and general advertising so long as sales are made only to ''accredited investors.''

[46] Emshwiller, ''NASD Quietly Takes Aim at IPO Bridge-Loan Trend,'' *The Wall Street Journal,* January 20, 1998, at Cl.

[47] *See Memory Metals, Inc.,* Securities Act Release No. 6820 (February 22, 1989).

[48] *New Allied Development corporation,* Securities Exchange Act Release No. 37990 (November 26, 1996); *see also Frederick R. Grant,* Securities Exchange Release No. 38239 (February 5, 1997); *Atlantis Group, Inc.,* securities Exchange Act Release No. 37932 (November 8, 1996); *Eli Buchalter,* Securities Exchange Act Release No. 37702 (September 19, 1996); *Milton Mermelstein,* Securities Exchange Act Release No. 37222 (May 16, 1996).

[49] *See New Allied Development Corporation,* Securities Exchange Act Release No. 37990 (November 26, 1996) (the respondents obtained new Allied, a public shell, which was a dormant uranium mining company with no assets, in a transaction which resulted in insiders controlling 52.4% of New Allied's stock; New Allied then acquired an interest in real estate associated with worthless gambling concerns in exchange for New Allied stock); *Douglass and Co., Inc.,* 46 S.E.C. 1189 (1978).

[50] *See New Allied Development corporation,* Securities Exchange Act Release No. 37990 (November 26, 1996) (the respondents disseminated materially false documents to market makers, including unaudit financial statements, that valued new Allied's medical and consumer products at $2,150,000 although their historical costs were approximately $17,000); *A.J. Carno Co.,* 1976 SEC LEXIS 2764 (February 23, 1976) (Initial Decision), *order dismissing proceeding and withdrawing broker-dealer registration,* Securities Exchange Act Release No. 14647 (April 10, 1978) (Management Dynamics, Inc.'s (MD) founding officer and director wrote MD shareholders to recommend the acquisition of the assets of a real estate developer. Press releases and shareholder letters reinforced the misleading impression that the transaction was certain to generate substantial income for MD).

[51] When two companies merge, compliance with Generally Accepted Accounting Principles requires that the combination be accounted for as either the ''pooling method'' or ''purchase method.'' With the pooing method, the historical costs of the two companies are added together. With purchase method accounting, the company being acquired writes up its assets to fair market value, which generally are greater than the historical costs.

[52] *Ronald Effren,* Securities Act Release No. 7256, Securities Exchange Act Release No. 36713 (January 16, 1996); *see also Martin Halpern,* Securities Exchange Act Release No. 34727 (September 27, 1994).

[53] *See* Securities Exchange Act Form 8–K, Item 4; *Merle S. Finkel,* Securities Act Release No. 7401 (March 12, 1997) (original auditors notified systems of Excellence that purported registration statement on Form S–8 had not been filed and that other

Rule 15c2–11 does not contemplate that the broker-dealer scrutinize the issuer's financial statements with the expertise of an accountant. The above red flags, however, do not require an expertise in accounting matters and have appeared in several microcap fraud schemes. In one case, the respondents stated in the Form 211 submissions to the NASD that they relied on audited financial statements. However, the auditors orally advised the associated persons of the broker-dealer before they submitted the Form 211 that the auditor's opinion attached to the *pro forma* financial statement was qualified because of the auditor's inability to verify the issuer's financial information.[54]

An accountant's resignation or dismissal is a characteristic found in some microcap fraud cases. If a broker-dealer sees any of these red flags, it should confirm the auditor's credentials with the appropriate state licensing authority, question the circumstances of the change in accountants, and carefully scrutinize the Rule's required information.

14. *Extraordinary items in notes to the financial statements, e.g., unusual related party transactions.* Unusual related party transactions are sometimes found in microcap fraud schemes. For example, an issuer's financial statements may show a related party transaction between two companies, which later merge and inflate the worth of their assets by using purchase method accounting.[55]

15. *Suspicious documents.*

- Inconsistent financial statements;
- Altered financial statements; or
- Altered certificates of incorporation.

Altered or facially inconsistent issuer documents have been present in various microcap fraud schemes. For example, Polaris Mining Co. was a shell corporation with no meaningful assets and no trading market for its stock.[56] Douglass and Co., Inc., a broker-dealer, published quotations for Polaris in the Pink Sheets in violation of Rule 15c2–11 because the Polaris financial information upon which Douglass and Co., Inc. relied was deficient and contradictory on its face: two balance sheets for the same years contained blatant disparities. Both balance sheets valued certain mined but unprocessed ores at the estimated eventual selling price even though significant processing work remained to be done. One statement did not list property location. One statement had an item for capitalized expenses and the other statement for the same year did not. The former statement showed no retained earnings or accumulated deficit, suggesting that the figure for capitalized expenses was an arbitrary one designed to make assets and liabilities balance out.[57]

In addition, issuer information that is altered on its face raises red flags that, at a minimum, require the broker-dealer to contact the issuer.[58]

16. *Broker-dealer receives substantially similar offering documents from different issuers with the following characteristics:*

- The same attorney is involved;
- The same officers and directors are listed; and/or
- The same shareholders are listed.

It is not uncommon for the same individuals to be involved in multiple microcap frauds. If a broker-dealer realizes after reviewing the information for several issuers that the same individuals are involved with these entities, the broker-dealer should make further inquiries to determine whether it has a reasonable basis to believe that the issuer information is accurate.

17. *Extraordinary gains in year-to-year operations.* In microcap fraud cases, the issuer may show extraordinary gains in its year-to-year operations. This may be accomplished through assigning an artificially high value to certain assets or through other manipulative devices that are red flags, such as the significant write-up of assets upon merger or acquisition.[59]

18. *Reporting company fails to file an annual report.* The fact that a reporting company has not filed an annual report suggests that there is a potential problem with the company.[60]

19. *Disciplinary actions against an issuer's officers, directors, general partners, promoters, or control persons.*

The following types of disciplinary actions should trigger further investigation by a broker-dealer:

- Indictment or conviction in a criminal proceeding;[61]
- Order permanently or temporarily enjoining, barring, suspending or otherwise limiting an officer, director, general partner, promoter, or control person's involvement in any type of business, securities, commodities, or banking activities;
- Adjudication by civil court of competent jurisdiction, the Commission, the Commodity Futures Trading Commission or a state securities regulator to have violated federal or state securities or commodities law; or
- Order by a self-regulatory organization permanently or temporarily barring, suspending or otherwise limiting involvement in any type of business or securities activities.[62]

Many microcap fraud cases involve recidivist securities law violators.[63] If a broker-dealer has information or could reasonably discover information about the above types of violations, it should question whether it has a reasonable basis to believe that the issuer's information is accurate and complete in these circumstances.

20. *Significant events involving an issuer or its predecessor, or any of its majority owned subsidiaries.*

The following types of significant events should prompt further investigation by a broker-dealer:

- Change in control of the issuer;[64]
- Substantial increase in equity securities;
- Merger, acquisition, or business combination;
- Acquisition or disposition of significant assets;[65]

Bankruptcy proceedings;[66] or

Delisting from any securities exchange or the Nasdaq Stock Market.[67]

While not necessarily problematic, these are material events involving the issuer. The change in control of the issuer, merger, acquisition, or business combination, acquisition or disposition of significant assets can provide unscrupulous issuers an opportunity to artificially overvalue the issuer's assets to support an upward manipulation of the issuer's worthless

irregularities exist in connection with issuance of this stock; thereafter, Systems of Excellence retained new auditor who issued materially false or inaccurate audit reports.

[54] *See Robin Rushing and Harold Gallison, Jr.,* Securities Exchange Act Release No. 36910 (February 29, 1996). In this case, the SEC also had entered a trading suspension for lack of accurate financial information.

[55] *See Ronald Effren,* Securities Exchange Act Release No. 36713 (January 16, 1996).

[56] *Douglass and Co., Inc.,* 46 S.E.C. 1189 (1978).

[57] *See also Butcher & Singer, Inc.,* 48 S.E.C. 640, *aff'd without opinion,* 833 F.2d 303 (3d Cir. 1987) (a salesman and later an officer of Butcher & Singer apparently obtained some blank stock certificates and forged former officers' signatures as well as the certificates' amounts and purported dates of issuance to himself and his family members; the broker-dealer, Butcher & Singer, failed to review the Rule's required information; Butcher & Singer might have noticed red flags that would have led to the discovery of the underlying fraud if it had reviewed the Rule's required information).

[5] *See United States* v. *Marshall Zolp,* Litigation Release Nos. 11494 (July 23, 1987) and 11236 (October 2, 1986)(fictitious certificates of incorporation and fictitious financial statements on which the name of another company had been whited out and the name of Laser Arms filled in).

[59] *See, e.g., A. J. Carno Co.,* 1976 SEC LEXIS 2764 (February 23, 1976)(Initial Decision), *order dismissing proceedings and withdrawing broker-dealer registration,* Securities Exchange Act Release No. 14647 (April 10, 1978).

[60] *See Combined Companies International Corp.,* Securities Exchange Act Release No. 38653 (May 19, 1997); *Robin Rushing and Harold Gallison, Jr.,* Securities Exchange Act Release No. 36910 (February 29, 1996).

[61] *Stylex Homes, Inc.,* Securities Exchange Act Release No. 36299 (September 29, 1995).

[62] The reproposed text of Rule 15c2–11(c)(6)(xi)(A)(*2*) requires the broker-dealer to review these factors for non-reporting issuers. Otherwise, under the reproposed text of Rule 15c2–11(c)(6)(xi)(B) or (C), the broker-dealer must obtain a statement from the issuer that none of these events has occurred or must record the steps taken to obtain this information and that the issuer refused or failed to provide it. Even though the current Rule does not require the broker-dealer to obtain and review this information, we consider such information to be red flags under the Rule if it comes to the broker-dealer's attention.

[63] *See SEC* v. *I-Net Providers,* Litigation Release No. 15219 (January 17, 1997); *New Allied Development Corporation,* Securities Exchange Act Release No. 37990 (November 26, 1996).

[64] *See* Exchange Act Form 8–K, Item 1.

[65] *See* Exchange Act Form 8–K, Item 2.

[66] *See* Exchange Act Form 8–K, Item 3.

[67] The proposed text of Rule 15c2–11(c)(6)(xii)(A) requires the broker-dealer to review these factors. Otherwise, under the proposed text of Rule 15c2–11(c)(6)(xii)(B) or (C), the broker-dealer must obtain a statement from the issuer that none of these events has occurred or must record the steps taken to obtain this information and that the issuer refused or failed to provide it. Even though the current Rule does not require the broker-dealer to obtain and review this information, we consider such information to be red flags under the Rule if it comes to the broker-dealer's attention.

stock.[68] An increase in the issuer's equity securities provides the securities necessary for such manipulation. Bankruptcy proceedings or a delisting from an exchange or the Nasdaq Stock Market may also indicate problems with an issuer that could lead the broker-dealer to conclude that it does not have a reasonable basis to believe that the issuer's financial information is accurate.[69]

21. *Request to publish both bid and ask quotes on behalf of a customer for the same stock.* The highly unusual request from a customer for the broker-dealer to publish both bid and ask quotes is a red flag ''that calls for appropriate inquiry on [the broker-dealer's] part.'' [70]

22. *Issuer or promoter offers to pay a ''due diligence'' fee.* If a market maker receives an offer from an issuer to pay a ''due diligence'' fee in connection with making a market in the issuer's security, this is not solely a red flag.[71] It is a violation of NASD Rule 2460 for the broker-dealer to accept this offer.[72] If the broker-dealer receives any consideration in connection with publishing a quotation, the reproposed Rule requires the broker-dealer to disclose any such compensation, as well as any other significant relationship information between the issuer and the broker-dealer publishing the quotation or any of its associated persons.[73] *In Douglass and Co., Inc.,* a registered representative said he would try to get the broker-dealer to initiate a market in the stock of Polaris Mining Co., but that it would cost the issuer about $1,500 to cover ''expenses.'' The registered representative later agreed to accept Polaris stock (some of which he kept himself) instead of the $1,500.[74]

23. *Regulation S transactions of domestic issuers.* Regulation S [75] provides a safe harbor from the registration requirements of the Securities Act of 1933 for offers and sales of securities by both foreign and domestic issuers that are made outside the United States. We recently adopted amendments to Regulation S that are designed to prevent the abuses that relate to offshore offerings of equity securities of domestic issuers.[76] Prior to the recent amendments, Regulation S transactions involving large amounts of the securities of U.S. issuers were particularly vulnerable to fraud and manipulation.[77] The perpetrators of the fraud sold the securities to U.S. investors after the 40-day holding period expired, and little information was available to investors about the issuers.

Under the amendments, equity securities of U.S. issuers that are sold offshore under Regulation S are classified as ''restricted securities'' within the meaning of Rule 144 under the Securities Act, and the period during which these securities cannot be distributed in the United States is lengthened from 40 days to one year. These amendments make Regulation S abuses less likely, but broker-dealers should be alert to any questionable activities once the one-year holding period expires.

24. *Form S–8 stock.* Form S–8 is the short-form registration statement for offers and sales of a company's securities to its employees, including consultants and advisors.[78] The form has been abused by unscrupulous issuers to register on Form S–8 securities nominally offered and sold to employees or, more commonly, to so-called consultants and advisors. These persons then resell the securities in the public markets, at the direction of the issuer or a promoter.[79] In a typical pattern, an issuer registers on Form S–8 securities underlying options issued to so-called consultants where, by prearrangement, the issuer directs the consultants' exercise of the options and resale of the underlying securities in the public market. The consultants then either remit to the issuer the proceeds from the sale of the underlying shares, or apply the proceeds to pay debts of the issuer that are not related to any services provided by the consultants.[80] In some cases, these consultants perform little or no other service for the issuer. In other microcap frauds, the issuer uses Form S–8 to sell securities to ''employees'' who act as conduits by selling the securities to the public and remitting the proceeds (or their economic benefit) to the issuer.[81] This public sale of securities by the issuer has not been registered, although the Securities Act requires registration. The failure to register this sale of securities deprives public investors of the protections afforded by the Securities Act.

To prevent these abuses, Form S–8 and related rules impose certain restrictions on the use of the form for the sale of securities to certain consultants and advisors.[82] We are also proposing additional amendments to Form S–8.[83] Although these amendments should deter microcap abuses, broker-dealers nevertheless should be aware of the prior abuses of Form S–8 in microcap fraud cases.

25. *''Hot industry'' microcap stocks.* Another characteristic of microcap fraud cases is that they often involve stocks that are in vogue.[84] In the past, oil and gas ventures and mining operations, as well as stocks of issuers with purportedly innovative products, have been popular in frauds involving low-priced stocks.

26. *Unusual activity in brokerage accounts of issuer affiliates, especially involving ''related'' shareholders.* Many microcap frauds begin with the deposit and sale of large blocks of an obscure stock by a new and unfamiliar customer who often is affiliated with an issuer.[85] At the same time, the broker-dealer is encouraged to make a market in the stock by the issuer.

27. *Companies that frequently change names.* Frequent name changes are another characteristic that we have seen in microcap fraud cases. For example, Twenty First Century Health (TFCH) was originally a company called Big Valley Energy, Inc. Big Valley then changed its name to Biotronic Energy Engineering, Inc., then to The Sonoron Group, then to Zorro International, Inc., then to Health & Wealth, Inc., and finally became TFCH in 1995. At the promoter's request, TFCH issued false audited financial statements that recorded material, nonexistent assets.[86]

28. *Companies that frequently change their line of business.* Besides companies that frequently change their names, we also see

[68] *See New Allied Development Corporation,* Securities Exchange Act Release No. 37990 (November 26, 1996); *A. J. Carno Co.,* 1976 SEC LEXIS 2764 (February 23, 1976)(Initial Decision), *order dismissing proceedings and withdrawing broker-dealer registration,* Securities Exchange Act Release No. 14647 (April 10, 1978); *see also Bion Environmental Technologies, Inc.,* Securities Exchange Act Release No. 36111 (August 16, 1995).

[69] *See B.J. Thomas,* Securities Exchange Act Release No. 38727 (June 10, 1997); *SEC* v. *Magna Technologies, Inc.,* Litigation Release No. 12227 (August 21, 1989); *see e.g., Milton Mermelstein,* Securities Exchange Act Release No. 37222 (May 16, 1996).

[70] *Alessandrini & Co., Inc.,* 45 S.E.C. 399 (1971), *citing D.H. Blair & Co.,* 44 S.E.C. 320 (1970).

[71] *Butcher & Singer, Inc.,* 48 SEC 640, *aff'd without opinion,* 833 F.2d 303 (3d Cir. 1987)(a salesman received 400,000 shares of an obscure penny stock for helping to develop and maintain a market in the stock); *see Brent Duane Green,* Securities Exchange Act Release No. 39210 (October 7, 1997); *Steven Ira Wertman,* Securities Exchange Act Release No. 38751 (June 20, 1997); *Christopher D. Jennings,* Securities Exchange Act Release No. 38696 (May 30, 1997).

[72] NASD Rule 2460, Payments for Market Making, prohibits any payment by an issuer or the issuer's affiliates and promoters, directly or indirectly, to a member for publishing a quotation, acting as a market maker, or submitting an application.

[73] *See* reproposed Rule 15c2–11(e); *see also* current Rule 15c2–11(a)(5)(xvi).

[74] *Douglass and Co., Inc.,* 46 S.E.C. 1189 (1978); *see also See Robin Rushing and Harold Gallison, Jr.,* Securities Exchange Act Release No. 36910 (February 29, 1996); *General Bond & Share Co.,* 51 S.E.C. 411 (1993)(Commission opinion), *rev'd on other grounds, General Bond & Share Co.* v. *SEC,* 39 F.3d 1451 (10th Cir. 1994).

[75] 17 CFR 230.901–230.905 and Preliminary Notes.

[76] Securities Act Release No. 7505 (February 17, 1998), 63 FR 9632. We also adopted amendments that would affect applicable reporting requirements along with other amendments intended to prevent abuses of Regulation S. Since January 1, 1999, Regulation S transactions are required to be reported quarterly on Forms 10–Q and 10–K.

[77] *See Frederick R. Grant,* Securities Exchange Release No. 38239 (February 5, 1997); *S.E.C.* v. *Enviromint Holdings, Inc.,* Litigation Release No. 14683 (October 6, 1995).

[78] Form S–8 under the Securities Act of 1933 (15 U.S.C. 77a *et seq.*).

[79] *See S.E.C.* v. *Enviromint Holdings, Inc.,* Litigation Release No. 14683 (October 6, 1995).

[80] *See, e.g., Spectrum Information Technologies, Inc.,* Securities Act Release No. 7426 (June 25, 1997); *SEC* v. *Hollywood Trenz, Inc.,* Litigation Release No. 15730.

[81] *See* S.E.C. v. *Charles O. Huttoe,* Litigation Release Nos. 15153 (November 7, 1996); 15185 (December 12, 1996)(unregistered public offering purporting to use Form S–8).

[82] Securities Act Release No. 33–7646 (February 19, 1999).

[83] Securities Act Release No. 33–7647 (February 19, 1999).

[84] *See Douglass and Co., Inc.,* 46 S.E.C. 1189 (1978) (November 26, 1996)(mining operation); *see also S.E.C. v. Bradley J. Simmons and American Energy Group, Ltd,* Litigation Release No. 15353 (April 29, 1997)(oil and gas company).

[85] Laser Arms Report, 50 S.E.C. 489, 503; *see also Butcher & Singer,* Inc., 48 S.E.C. 640, *aff'd without opinion,* 833 F.2d 303 (3d Cir. 1987); *Gotham Securities Corporation,* 46 S.E.C. 723 (1976) (the family of the broker-dealer's principal owned a significant amount of the stock of Marcon Electronics Corp., which was a shell corporation with no assets; the family benefited when the broker-dealer manipulated upward the price of the Marcon stock).

[86] *Merle S. Finkel,* Securities Act Release No. 7401 (March 12, 1997).

companies that frequently change their line of business in microcap fraud cases. For example, New Allied Development started out as a uranium mining company that was a dormant public shell with no assets.[87] New Allied then acquired the rights to medical products in exchange for its overvalued stock. Next, New Allied became a vehicle to enter the gaming business purportedly to build a casino.

[87] *New Allied Development Corporation*, Securities Exchange Act Release No. 37990 (November 26, 1996).

[FR Doc. 99–5299 Filed 3–5–99; 8:45 am]

BILLING CODE 8010–01–P

federal register

Monday
March 8, 1999

Part III

Federal Maritime Commission

46 CFR Part 510 et al.

Licensing, Financial Responsibility Requirements, and General Duties for Ocean Transportation Intermediaries; Final and Interim Final Rule

FEDERAL MARITIME COMMISSION

46 CFR Parts 510, 515, and 583

[Docket No. 98–28]

Licensing, Financial Responsibility Requirements, and General Duties for Ocean Transportation Intermediaries

AGENCY: Federal Maritime Commission.

ACTION: Final rule and interim final rule.

SUMMARY: The Federal Maritime Commission adds new regulations establishing licensing and financial responsibility requirements for ocean transportation intermediaries in accordance with the Shipping Act of 1984, as modified by the Ocean Shipping Reform Act of 1998 and section 424 of the Coast Guard Authorization Act of 1998. As part of this rule, we are adopting as an interim final rule a provision that allows foreign non-vessel-operating common carriers the opportunity to seek a license under the licensing requirements of this part.

DATES: This rule is effective May 1, 1999.

Submit comments on the interim final rule on or before March 23, 1999.

ADDRESS: Address comments concerning the interim final rule to: Bryant L. VanBrakle, Secretary, Federal Maritime Commission, 800 North Capitol Street, N.W., Washington, D.C. 20573–0001.

FOR FURTHER INFORMATION CONTACT:

Austin L. Schmitt, Director, Bureau of Tariffs, Certification and Licensing, Federal Maritime Commission, 800 North Capitol Street, N.W., Washington, D.C. 20573–0001, (202) 523–5796

Thomas Panebianco, General Counsel, Federal Maritime Commission, 800 North Capitol St., N.W., Washington, D.C. 20573–0001, (202) 523–5740

SUPPLEMENTARY INFORMATION: On December 22, 1998, the Federal Maritime Commission (''FMC'' or ''Commission'') published a proposed rule to add new regulations at 46 CFR part 515 to implement changes made by the Ocean Shipping Reform Act of 1998 (''OSRA''), Pub. L. 105–258, 112 Stat. 1902, to the Shipping Act of 1984 (''1984 Act''), 46 U.S.C. app. § 1701 *et seq.*, relating to ocean freight forwarders and non-vessel-operating common carriers (''NVOCCs''). 63 FR 70710–70727, December 22, 1998. In addition, the Commission removes existing parts 510 and 583. Finally, under the Commission's restructuring of its rules, the new part 515 will be included in subchapter B of chapter IV, 46 CFR.

The Commission received 28 comments on this proceeding from U.S. Traffic Service; Cargo Brokers International, Inc. (''Cargo Brokers''); Council of European and Japanese National Shipowners'' Associations (''CENSA''); Effective Tariff Management Corporation (''ETM''); EuroAmerica Group Inc.; DITTO; North American Van Lines, Inc. t/a North American International (''NAI''); D.J. Powers Co., Inc.; Ocean World Lines, Inc. (''OWL''); Kemper Insurance Companies; New York/New Jersey Foreign Freight Forwarders and Brokers Association (''NY/NJFFFBA''); American Surety Association and Intercargo Insurance Company (''ASA/Intercargo''); National Industrial Transportation League (''NITL''); Ocean Carrier Working Group Agreement (''OCWG''); International Association of NVOCCs (''IANVOCC''); Airborne Express;[1] National Customs Brokers & Forwarders Association of America, Inc. (''NCBFAA''); Worldlink Logistics, Inc. and Worldlink International, Inc. (collectively ''Worldlink''); Charter Container Line; Yellow Corporation on behalf of its subsidiary YCS; American International Freight Association and Transportation Intermediaries Association (''AIFA/TIA''); Distribution-Publications, Inc. (''DPI''); British Association of Removers; National Association of Transportation Intermediaries (''NATI''); C.A. Shea & Company, Inc.; Glad Freight Int'l Inc.; Direct Container Line, Inc. (''DCL''); and American President Lines, Ltd. and APL Co., Pte Ltd. (''APL'').

Licensing Requirements

OSRA applies the requirements of section 19 of the 1984 Act to all ''ocean transportation intermediaries'' (''OTIs'') in the United States. An OTI means an ocean freight forwarder or an NVOCC as those terms are defined by the 1984 Act. OSRA requires that all OTIs in the United States be licensed by the Commission. The legislative history of OSRA directs the Commission to determine ''when foreign-based entities conducting business in the United States are to be considered persons in the United States'' for purposes of the licensing requirements of section 19 of the 1984 Act. S. Rep. No. 105–61, 105th Cong., 1st Sess., at 31 (1997) (''Report'').

The proposed rule offered for comment two alternative definitions of ''in the United States'' for purposes of the licensing requirements of this part. The Commission received 17 comments addressing this issue. D.J. Powers, Yellow, NY/NJFFFBA, NCBFAA, and OWL support the first option presented by the Commission, which would require that foreign-based OTIs use only licensed OTIs in the United States. D.J. Powers notes that it seldom encounters an agent who ''simply processes bills of lading'' and does not perform at least some sales activities if not more. Yellow maintains that this alternative is the most fair and equitable, and it will level the playing field and increase competition, which is ''unquestionably the primary goal'' of OSRA. OWL suggests licensing all OTIs and then equalizing the bond amounts of foreign and U.S. entities. NY/NJFFFBA states that under this alternative, foreign-based OTIs should not have to secure a higher amount of financial responsibility because their agents will also be licensed and bonded and further that no data support the higher amounts of financial responsibility. NCBFAA maintains that this approach is too narrow but at least gives recognition to the ''in the United States'' language.

Charter, DPI, NITL, AIFA/TIA, NATI, and APL support the second, less restrictive definition of ''in the United States.'' Charter asserts that it would be logical to draw the distinction in the licensing requirement based on physical presence in the United States since Congress contemplated that some OTIs would not be licensed. DPI favors this approach because the first option would be too expensive and many foreign OTIs use agents in the United States who are not OTIs themselves. NITL supports this alternative because it appears to establish a more reasonable boundary to the scope of the licensing requirement and would be more consistent with the deregulatory purposes of OSRA. Similarly, AIFA/TIA believes that this option is more in line with Congressional intent, but supports § 515.21(a)(4), which holds foreign-based OTIs responsible for the acts or omissions of their agents. In contrast, DPI does not support § 515.21(a)(4) because it imposes too much regulation over NVOCCs operating outside the United States. NATI maintains that the first approach is restrictive and would unnecessarily prohibit existing business arrangements from continuing. APL also suggests that the Commission give foreign OTIs with minimal contacts in the United States the option of becoming licensed, so that they can perform their own services in the United States and reduce costs and increase quality control. In addition, APL asserts that some foreign OTIs may find the higher amount of financial

[1] Airborne Express adopts in full the comments of the IANVOCC and, therefore, will not be referenced further.

responsibility too high and would rather be licensed and furnish the lesser financial responsibility required of those OTIs in the United States.

CENSA and ASA/Intercargo support either option. In the event the Commission adopts option two, ASA/Intercargo suggests that the Commission provide guidance to the public as to what constitutes ''minimal'' services as opposed to a ''full spectrum'' of OTI services. The Commission is reluctant to set forth a rigid standard for when an entity is operating as a freight forwarder or an NVOCC, particularly in light of the innovations and technological advances made in the industry. Therefore, we refer to our discussion of this issue in the Notice of Proposed Rulemaking, 63 Fed. Reg. at 70710 (1998), especially pertaining to *In Re: The Impact of Modern Technology on the Customs and Practices of the Freight Forwarding Industry—Petition for Rulemaking: Order Denying Petition for Rulemaking or Declaratory Order,* 28 S.R.R. 418 (1998), and *Activities, Filing Practices and Carrier Status of Containerships, Inc.,* 9 F.M.C. 56 (1965).

DCL urges the Commission to reconsider the third alternative which it rejected at its meeting of December 9, 1998, which would have licensed any OTI providing services to or from the United States through an agent physically present in the United States. DCL believes that all NVOCCs, whether foreign or domestic, should be licensed, and maintains that nothing in the legislative history precludes this approach. Rather, DCL asserts that the Commission's overvaluation of the significance of the ''in the United States'' limitation should give way to the interpretation that allows the greatest fairness to those entities competing with unlicensed NVOCCs. In addition, DCL argues, this approach would strengthen the Commission's enforcement capabilities with respect to foreign entities who elude Commission regulation. Similarly, Glad Freight supports licensing foreign freight forwarders to lead to better enforcement.

IANVOCC and Worldlink also support the definition the Commission rejected, maintaining that Congress intended that only ''certain'' foreign OTIs would not be licensed, and therefore, some foreign OTIs would be licensed. Congress could have limited the licensing requirements as it has for freight forwarders, to NVOCCs engaged only in the U.S. export trade, but did not; thus, IANVOCC and Worldlink argue that Congress intended the ''in the United States'' phrase to encompass foreign-based NVOCCs that participate in the U.S. foreign commerce. Moreover, they assert that Congress gave the Commission broad discretion to rely on its experience and expertise to determine what it means to be ''in the United States'' in regulating the NVOCC industry. Both suggest a modified definition of ''in the United States'' combining both alternatives. Worldlink submits that without a broad definition of ''in the United States,'' ''unscrupulous, unlicensed foreign NVOCCs could continually disrupt shipping markets by engaging in misdescription or rebate schemes'' and, therefore, proposes the following definition to provide the broadest possible licensing coverage:

> For purposes of this part, a person is considered to be ''in the United States'' if such person is incorporated in, resident in, or established under the laws of the United States, or otherwise maintains a physical presence in the United States. Such indicia of physical presence may include, but are not limited to, whether the person holds a taxpayer identification number, *holds or is legally required to obtain* a state or local business license, or maintains a mailing address in the United States. Only persons licensed under this part may furnish or contract to furnish ocean transportation intermediary services in the United States on behalf of an unlicensed ocean transportation intermediary.

IANVOCC believes that the licensing requirement should be broad enough to cover all NVOCCs, whether based in the United States or foreign countries, that provide a significant amount of ocean transportation services in the United States, and it proposes the same definition suggested by Worldlink. IANVOCC also suggests defining ''in the United States'' to coincide with the jurisdictional reach of United States courts as follows:

> For purposes of this part, a person is considered to be ''in the United States'' if such person is resident in or incorporated or established under the laws of the United States or would be subject to jurisdiction in the courts of the United States for any of its ocean transportation intermediary activities in United States commerce.

In addition, IANVOCC notes that if the Commission is concerned about unfairly reaching certain foreign-based NVOCCs who have only minimal contacts in the United States, it could limit the definition in the following manner:

> Provided that any person handling only occasional or an insubstantial volume of shipments in United States trades as an ocean transportation intermediary shall not be considered to be ''in the United States'' for licensing purposes.

EuroAmerica, DITTO, and ETM object to the requirement that NVOCCs be licensed at all, because it represents an increased regulatory burden. However, the requirement that OTIs be licensed is statutorily imposed and cannot be waived by the Commission. In a similar vein, NATI objects to the definition of ''shipper'' in proposed § 515.2(s) and prefers the previous definition. However, this definition is statutory and cannot be changed. This section has been redesignated as § 515.2(t).

The Commission adopts the first proposed definition of what is considered to be ''in the United States'' for the licensing requirements of this part. Thus, after the first two sentences, § 515.3 is revised to read:

> For purposes of this part, a person is considered to be ''in the United States'' if such person is resident in, or incorporated or established under, the laws of the United States. Only persons licensed under this part may furnish or contract to furnish ocean transportation intermediary services in the United States on behalf of an unlicensed ocean transportation intermediary.

The Commission agrees with the comments that this approach is the most fair and equitable. We believe it is a good step towards leveling the playing field between OTIs in the United States who are within the Commission's jurisdictional reach and those who are outside of that reach. Moreover, this definition will increase competition, consistent with the intent of OSRA.

The Commission believes that this alternative provides foreign NVOCCs greater flexibility by presenting them with two options. First, a foreign NVOCC could use an independently licensed agent in the United States, in which event the agent would establish its own financial responsibility and the foreign NVOCC would be required to secure the higher amount of financial responsibility applicable to unlicensed OTIs pursuant to § 515.21(a)(3). Alternatively, a foreign NVOCC could choose to set up its operations in this country for licensing purposes in accordance with § 515.3 and establish financial responsibility applicable to OTIs in the United States. This alternative accommodates the suggestion of some commenters that foreign NVOCCs be permitted to seek to become licensed under this part.

The Commission intends that the appropriate instrument of financial responsibility is available to pay off on claims or judgments against an OTI. Under current practice, the instrument of financial responsibility is obtained in the name of the entity issuing the bill of lading and publishing the tariff. Thus, the licensee must be the entity on the bill of lading, tariff and instrument of financial responsibility in order to ensure that the financial responsibility

covers the shipments handled on the bill of lading. For example, ''ABC Freight Hong Kong'' handles shipments from the Far East inbound to the United States, and wants to obtain a license, and thus establish a lower amount of financial responsibility. Therefore, it sets up an unincorporated office that is resident in the United States (*see* § 515.3). We would not consider this unincorporated office to be a separate branch office subject to additional licensing and financial responsibility requirements of this part. However, in the event that the licensee seeks to establish other branch offices in addition to its primary United States office, those other offices would be subject to the licensing and financial responsibility requirements applicable to separately incorporated and unincorporated branch offices.

We have limited the option of a foreign entity becoming licensed under this part to NVOCCs, and not freight forwarders, because an ''ocean freight forwarder'' is defined in § 515.2(o)(1) as a person who dispatches shipments ''from the United States.'' Moreover, a freight forwarder has a fiduciary relationship with its customer, and a foreign freight forwarder, by its very nature, would be performing services for its customers in a foreign country beyond the reach of the Commission. Because this alternative to allow foreign NVOCCs to seek to become licensed under this part was not included in the proposed rule, interested parties will have the opportunity to comment on it, although it will go into effect as an interim final rule.

Section 515.11 provides that to be eligible for an OTI license, an applicant must possess the necessary experience, that is, that its qualifying individual has three years' experience in providing OTI activities in the United States and the necessary character to render ocean transportation intermediary services. This provision had been applicable only to freight forwarders under 46 CFR § 510.11. To effectuate the alternative outlined above to allow foreign NVOCCs the opportunity to become licensed under this part, we have amended § 515.11(a)(1) by adding the following provision:

> Foreign NVOCCs seeking to be licensed under this part must demonstrate that the qualifying individual has a minimum 3 years' experience in ocean transportation intermediary activities and the necessary character to render ocean transportation intermediary services.

This revision removes the ''in the United States'' restriction on the experience requirement, which we believe will better assist those foreign NVOCCs who seek to obtain a license under this part. We also seek comment on this modification because it was not included in the proposed rule. However, it will go into effect as an interim final rule.

NCBFAA supports applying the licensing requirements in § 515.11 to all OTIs, including those only operating as NVOCCs. NCBFAA notes that this requirement is ''one of the Commission's time proven methods for making sure that entities providing OTI services are qualified by character and experience to conduct business in the United States.'' NCBFAA further requests that the Commission specifically affirm the principle that a qualifying individual is permitted to be a corporate officer of more than a single company. Proposed § 515.11(c), which was modeled after 46 CFR § 510.11(c), provides that ''the qualifying individual of one active licensee shall not also be designated contemporaneously as the qualifying individual of an applicant for another ocean transportation intermediary license.'' Thus, as proposed, an individual could be a qualifying individual for an unincorporated, and therefore unlicensed, branch office, but separate licensees would not be permitted to have the same qualifying individual simultaneously. The Commission recognizes NCBFAA's position that many OTIs are relatively small companies which provide forwarding and NVOCC services through separate corporate entities, and affirms that a person may be a qualifying individual for more than one company. To that end, we have added in the final rule a qualifying phrase at the end of the above referenced sentence of § 515.11(c) that states ''except for a separately incorporated branch office.'' Thus, separately incorporated branch offices will be permitted to have the same qualifying individuals for licensing requirements.

NCBFAA, OWL and NY/NJFFFBA urge that existing licensees be able to keep their current license numbers, both because of the additional cost involved in printing new stationery with a new number, as well as because many forwarders are justifiably proud of their long period of service in the industry and of being amongst the Commission's first licensees. The Commission recognizes these reasons and will ensure that existing licensees keep their current license numbers. The Commission will issue new licenses which indicate whether an entity is operating as a freight forwarder, as an NVOCC, or both, as requested by several commenters, and will maintain the current license numbers for existing licensees. Because the Commission will be inundated with license applications on May 1, 1999, all licensees will have 90 days from the date of receipt of the new license to comply with the requirements of § 515.31(b) of this part, if applicable. Similarly, existing freight forwarders will not be required to pay an additional license fee, a concern raised by Glad Freight and NCBFAA.

U.S. Traffic Service argues that OTIs who perform services exclusively for affiliated carriers should not have to be licensed and instead proposes that these entities establish financial responsibility similar to unincorporated branch offices. Worldlink also opposes § 515.3 (existing 46 CFR § 510.3), which requires that separately incorporated branch offices be licensed, arguing that it assumes that the branch offices will be outside of the control of the licensee. However, the Commission declines to adopt these suggestions. As many of the commenters have noted, and as we considered with reference to the qualifying individual issue discussed above, many entities choose to become separately incorporated for a variety of business or tax reasons. If separate incorporations were allowed to post financial responsibility at a lower amount in conjunction with another entity, the separate incorporation would, in effect, be limiting its liability to $10,000. It would be more difficult for a claimant to pierce the corporate veil and attempt to go after the assets of the ''parent.'' This problem does not occur with the unincorporated branch offices, because in that scenario, the unincorporated branch office is, by definition, established by, maintained by, or under the control of the licensee.

The Commission proposed that any NVOCC with a tariff and evidence of its financial responsibility in effect as of the date of publication of the proposed rule in the **Federal Register**, December 22, 1998, would be permitted to continue operating without the requisite three years' experience and character requirement. DITTO and DPI criticize this date as being unfair to those NVOCCs who had complied with Commission regulations for becoming an NVOCC, but had not yet completed the process. DPI provided a list of entities who were either waiting the thirty days for their tariffs to become effective or had filed evidence of financial responsibility with the Commission but had not yet filed a tariff. DITTO and DPI suggested cut-off dates of January 30 and February 7, 1999, respectively. The Commission originally proposed the December 22, 1998 date because it seemed the least

arbitrary of any given date and had a nexus to the rulemaking process. However, in view of the comments, any NVOCC with a tariff and financial responsibility in effect as of April 30, 1999 (the final day prior to the effectiveness of the OSRA amendments) will be permitted to continue operating without the requisite three years' experience and character requirement; provided, however, that no individual may act as a qualifying individual for another company without the necessary experience. In addition, all NVOCCs must submit applications for a license by May 1, 1999.

Exemption From Licensing Requirement

The Commission proposed to exempt from its licensing requirements any person which exclusively transports used household goods and personal effects for the account of the Department of Defense (''DOD'') or under the International Household Goods Program administered by the General Services Administration (''GSA''). No comments were received on this proposal, and accordingly, § 515.4(e) will go into effect as proposed.

Financial Responsibility Requirements

The Commission proposed to define transportation-related activities, proposed § 515.2(v), to include all of the freight forwarding activities in proposed § 515.2(i), as well as other enumerated activities, including some specified in the Report. Kemper, ASA/Intercargo, APL, D.J. Powers, Charter, Yellow, DPI, NY/NJFFFBA, IANVOCC, NCBFAA, NATI, Worldlink and OWL commented on the proposed definition.

At the outset, many commenters complained that the definition blurs the distinction between freight forwarders and NVOCCs. NY/NJFFFBA notes that by combining freight forwarder services with NVOCC services, the Commission has ignored Congressional intent to keep these entities separate. To that end, OWL proposes that the Commission promulgate a new section for ''NVOCC services'' that parallels the ''freight forwarder services'' section.

The majority of commenters complain that the proposed definition was a list of damages rather than activities engaged in by OTIs. In particular, the commenters object to including loss or conversion of cargo (even though that item was in the Report), cargo damage and delay of shipment in any definition. Kemper and ASA/Intercargo point out that these items conflict with the Carriage of Goods by Sea Act (''COGSA''), 46 U.S.C. app. §§ 1300-1315, and assert that if the Commission adopts the definition as proposed, it must clarify that the definition does not deprive OTIs and financial responsibility providers of their right to assert defenses and limitations of liability consistent with COGSA and common law.

ASA/Intercargo states that holding NVOCCs liable for ''breach of fiduciary responsibility'' imputes to NVOCCs a duty where one does not exist. Moreover, ASA/Intercargo, NY/NJFFFBA and OWL assert that ''service contract obligations of an NVOCC, as a shipper'' must be removed from the list. Although the Report specifies that a bond or other instrument of financial responsibility covers an NVOCC's service contract obligations, the commenters contend that at the time the Report was drafted NVOCCs would have been allowed to enter service contracts as carriers, and, therefore, the Report has been superceded and that language is no longer binding.

The commenters offer varied suggestions as to what would be a viable definition of ''transportation-related activities,'' ranging from a minimalist approach to an exclusive, limited list. NATI proposes that the definition be removed entirely and instead maintains that what constitutes transportation-related activities should be determined on a case-by-case basis. IANVOCC asserts that the proposed definition is both too narrow, in that it tries to capture each potential claimant, and too broad, by defining causes of action which may not exist under statutory or common law. Instead, IANVOCC recommends that the Commission adopt a more flexible approach and focus on the necessary and customary activities performed by NVOCCs in the course of providing transportation services to their customers. Such an approach, IANVOCC avers, would better accommodate the evolving nature of NVOCC activities in the future.

Yellow and Worldlink also suggest a definition which is broad enough to cover all activities performed by OTIs, but which cannot be construed to cover matters beyond the OTI's control:

> Any activity performed by an ocean transportation intermediary that is necessary or customary in the provision of transportation services to customers.

Similarly, NCBFAA favors a general statement that informs parties that the instrument of financial responsibility is available to satisfy judgments for a broad range of transportation-related liabilities, not just those resulting from a violation of the Shipping Act. In the alternative, NCBFAA suggests a caveat be added to the proposed list indicating that the list is intended to limit future disputes between claimants and financial responsibility providers but is not a finding that OTIs are obligated to perform the listed services.

Charter suggests the following items should be included in a definition: leasing containers, contracting for space on vessels, entering into arrangements with origin or destination agents, and engaging truckers, consolidators or warehouses. APL states that ''payment of ocean freight charges'' should be removed from the proposed definition because it is too restrictive and does not recognize the range of services that OTIs provide, and should be replaced with ''payment of port-to-port or multimodal transportation charges.''

On the other end of the spectrum, D.J. Powers wants a limited definition of what constitutes ''transportation-related activities.'' Similarly, Kemper argues that the Commission was directed to issue a definition to ''restrict coverage under the bond'' and fails to do so with the qualifying statement that the definition ''includes but is not limited to'' the enumerated activities. As such, Kemper offers the following definition of NVOCC services:

> *Non-vessel-operating common carrier services* refers to the provision of carriage by water of cargo between the United States and a foreign country for compensation without operating the vessels by which the transportation is provided, which may include but are not limited to the following:
> (1) the purchase of transportation services from a VOCC and offering such services for resale to the NVOCC's shipper-customers;
> (2) the remitting of lawful compensation to ocean freight forwarders;
> (3) the arrangement of inland transportation and the payment of inland freight charges for through transportation movements as defined by the Act;
> (4) the assumption of responsibility for the safe transportation of cargo shipments by reasonable dispatch;
> (5) the issuance of bills of lading or equivalent documents; and/or
> (6) the entering of affreightment agreements with underlying shippers.

ASA/Intercargo proposes a similar definition of non-vessel-operating common carrier services:

> (1) assuming responsibility for the safe transportation of cargo shipments by reasonable dispatch;
> (2) purchasing transportation services from a VOCC and offering such services for resale to other persons;
> (3) entering into affreightment agreements with underlying shippers;
> (4) issuing bills of lading or equivalent documents;
> (5) arranging for inland transportation and paying for inland freight charges on through transportation movements as defined by the Act; or

(6) paying lawful compensation to ocean freight forwarders.

Both Kemper and ASA/Intercargo suggest that the Commission adopt the proposed definition of NVOCC services, or a modified version, and then define transportation-related activities as including, but not limited to, the freight forwarding services in § 515.2(i), and limited to the enumerated NVOCC services.

ASA/Intercargo, Kemper and D.J. Powers are the only commenters that advocate a restrictive definition. Indeed, Kemper argues that the Commission ''was directed to issue a definition to restrict coverage under the bond to the transportation-related activities arising out of an OTI's responsibility as an ocean carrier; namely providing ocean transportation services.'' Further, Kemper asserts that ''[b]y not including an exclusive list of ''transportation-related activities'' that are covered by the surety bond, the very point of having a definition of ''transportation-related activities'' is moot and ineffective in avoiding unnecessary litigation over what is ''transportation-related.'''

The Commission finds the comments very helpful. The Commission is aware that although they are subsumed under the umbrella of ''ocean transportation intermediaries,'' the individual definitions of ''ocean freight forwarder'' and ''NVOCC,'' and in fact the distinctive activities performed by the individual entities, remain intact from the 1984 Act. Therefore, the Commission adopts a definition of ''NVOCC services'' and a revised definition of ''transportation-related activities'' culled from the commenters' suggestions.

The definition of non-vessel-operating common carrier services, at § 515.2(l), will be as follows:

Non-vessel-operating common carrier services refers to the provision of transportation by water of cargo between the United States and a foreign country for compensation without operating the vessels by which the transportation is provided, and may include, but are not limited to, the following:

(1) Purchasing transportation services from a VOCC and offering such services for resale to other persons;

(2) Payment of port-to-port or multimodal transportation charges;

(3) Entering into affreightment agreements with underlying shippers;

(4) Issuing bills of lading or equivalent documents;

(5) Arranging for inland transportation and paying for inland freight charges on through transportation movements;

(6) Paying lawful compensation to ocean freight forwarders;

(7) Leasing containers; or

(8) Entering into arrangements with origin or destination agents.

The definition of transportation-related activities, redesignated § 515.2(w), will be revised to read as follows:

Transportation-related activities which are covered by the financial responsibility obtained pursuant to this part include, to the extent involved in the foreign commerce of the United States, any activity performed by an ocean transportation intermediary that is necessary or customary in the provision of transportation services to a customer, but are not limited to the following:

(1) For an ocean transportation intermediary operating as a freight forwarder, the freight forwarding services enumerated in § 515.2(i), and

(2) For an ocean transportation intermediary operating as a non-vessel-operating common carrier, the non-vessel-operating common carrier services enumerated in § 515.2(l).

The Commission does not, however, agree that it was directed to formulate a restrictive definition. Rather, the Report simply directs the Commission to define transportation-related activities and gives as examples a few items that are covered by the financial responsibility, including liabilities from service contract obligations, judgments and claims resulting from loss or conversion of cargo, negligence or complicity of the bonded entity, and nonperformance of services. In particular, we do not adopt the position advocated by ASA/Intercargo, NY/NJFFFBA, and OWL that ''service contract obligations of an NVOCC, as a shipper'' should not be covered by an OTI's financial responsibility. In fact, courts have recognized that damages arising from service contract obligations are covered by an OTI's financial responsibility and Congress did not intend to change this. *See P & O Containers* v. *American Motorists Ins. Co.*, No. CV–96–5828, 1997 U.S. Dist. LEXIS 5522 (C.D. Cal. April 15, 1997), and *P & O Containers, Ltd.* v. *American Motorists Ins. Co.*, 96 Civ. 8244(JFK), 1998 WL 146229 (S.D.N.Y. March 25, 1998). Moreover, the revised definitions should satisfy the commenters' concerns that the proposed definition conflicted with COGSA.

The point of defining what is considered ''transportation-related activities'' is to ensure that the instrument of financial responsibility is used to pay for claims arising out of an OTI's transportation-related activities. To that end, in the supplementary information to the Notice of Proposed Rulemaking in this proceeding, the Commission reaffirmed this principle stating that ''someone who operates as an OTI also provides non-OTI services, those services would not be covered by the bond, surety or other insurance.'' 63 FR at 70711. Further, we stated that prior to paying a judgment, ''the financial responsibility provider may inquire into the subject matter of the judgment to ensure that it is for damages covered by the instrument of financial responsibility—i.e. that it arises from transportation-related activities.'' *Id.* We embrace the approach advocated by IANVOCC that too narrow a definition ''does not allow for future growth and dynamism of the NVOCC industry * * * the activities they perform as NVOCCs will evolve, which could lead to new types of claims which should be, but are not, covered by this [proposed] definition.''

In a similar vein, ASA/Intercargo objects to the Commission's use of the phrase ''transportation-related liabilities'' in §§ 515.22(b) and (c). In view of the changes to the definition of ''transportation-related activities,'' we amend the language in §§ 515.22(b) and (c) to read ''damages arising from transportation-related activities.''

Claims Against an OTI's Financial Responsibility

The Commission has also proposed, at § 515.23, new procedures for pursuing claims against the bond, insurance or other surety of an OTI. Any party may seek an order for reparation at the Commission pursuant to sections 11 or 14 of the 1984 Act, in which event the bond, insurance or other surety shall be available to pay. Alternatively, where a claimant seeks relief in an appropriate court, the claimant shall attempt to resolve its claim with the financial responsibility provider prior to seeking payment on any judgment it has obtained or will obtain.

The bulk of the comments received on this issue are from ASA/Intercargo and Kemper. At the outset, ASA/Intercargo asserts that the supplementary information pertaining to the financial responsibility of OTIs is incomplete and inconsistent with the Congressional intent of OSRA because the Senate Report on which it relies was written prior to the final version of OSRA. The supplementary information states that the financial responsibility shall be available to pay for damages suffered by ocean common carriers, shippers and others injured by the OTI. ASA/Intercargo wants the Commission to qualify ''others'' by adding ''who employed the services of the OTI.'' Leaving ''others'' undefined, ASA/Intercargo maintains, would subject the surety to any claim, whether or not that party had privity of contract or any

relationship to the cargo movement. The Commission declines to limit ''others'' as sought. The language about which ASA/Intercargo complains is taken directly from the Report and we find no support for such a limitation. Rather, we note that during the legislative process, the objective as to what is covered by the financial responsibility obtained under this part has remained consistent.

Section 515.23(b) sets forth an alternative claim procedure which provides that upon a claimant's notification of its claim to the financial responsibility provider, the financial responsibility provider and claimant can settle the claim with the OTI's consent, or, if the OTI fails to respond to the notice of the claim within 45 days, the financial responsibility provider and claimant can settle the claim on their own. If, however, the parties fail to reach agreement within ninety (90) days, then the bond, insurance or other surety shall be available to pay any judgment for damages to the extent they arise from the transportation-related activities of the OTI.

OCWG argues that the Commission has proposed procedural requirements which unduly interfere with the ability of carriers and others to recover damages they have incurred. OCWG asserts that there is nothing in OSRA or its legislative history which requires a party to take additional steps prior to executing a judgement it has lawfully obtained, but rather avers that Congress was concerned that sureties be given adequate notice before they were required to pay on a claim against an OTI. Indeed, by interfering with a final judgment, proposed § 515.23(b) is said to be unconstitutional under the ''vested rights doctrine.'' OCWG proposes to revise § 515.23(b) as follows:

> If a party does not file a complaint with the Commission pursuant to section 11 of the Act, but otherwise seeks to pursue a claim against an ocean transportation intermediary bond, insurance or other surety for damages arising from its transportation related activities, it may commence suit before a court of competent jurisdiction, naming as parties both the financial responsibility provider and the ocean transportation intermediary.

In contrast, NCBFAA believes § 515.23 is a positive change, but recommends that regardless of whether a party intends to pursue a claim with the Commission or a court of law, it should first be required to make a demand directly with the OTI. Similarly, NATI supports the possibility of a settlement between the claimant and the financial responsibility provider, but wants to ensure that valid notification is established to prevent any abuse where notice is not received by the surety. DITTO complains that 90 days is an insufficient amount of time in which to properly research and process a claim.

Similarly, ASA/Intercargo and Kemper contend that while the Commission may not have the ability to restrict a claimant's judicial access, it has the duty and the authority to require a claimant to notify both the OTI and the surety upon the filing of a complaint against an OTI. ASA/Intercargo insists that the rules must provide for timely notice of claims, timely submission of information necessary to evaluate a claim, and notice of any request to enter a judgment. Kemper argues that a claimant must first seek to settle a *claim* and objects to the proviso in § 515.23(b) that prior to seeking payment on a *judgment* the claimant shall seek to resolve its claim with the financial responsibility provider. Kemper argues that this language negates the intent of OSRA, which Kemper asserts is to require that the parties seek to settle a claim before obtaining a judgment.

The Commission does not have the authority to limit or prevent a claimant from seeking judicial access prior to pursuing a settlement with the financial responsibility provider, particularly where such restrictions could prevent claimants from filing their actions within a statute of limitations. However, under the express language of section 19(b)(2)(C) of OSRA, the Commission may require the claimant to seek a settlement with the financial responsibility provider prior to enforcing any judgment it has obtained or will obtain against the OTI; the statute provides that the financial responsibility provider has a ''reasonable period of time'' within which to resolve the claim.

Moreover, even if the Commission were to require in its rules that a claimant make a demand on the OTI and financial responsibility provider prior to seeking relief in an appropriate court, or notify the financial responsibility provider when such a lawsuit is initiated, the Commission could not provide for any recourse if the claimant failed to comply. The Commission cannot nullify a valid court judgment. Moreover, imposing such an onerous burden on claimants would defeat the purpose of the legislation. As the sureties frequently point out, the purpose of establishing an alternative claim procedure is to protect the interests of the claimants, OTIs and the financial responsibility providers; this objective would not be served by removing the availability of the financial responsibility from claimants who are unfamiliar with the instant Commission regulations at the time they seek judicial recourse. The approach we have proposed accomplishes this goal in a balanced manner by ensuring that financial responsibility providers have a reasonable period of time within which to engage in a limited review of a judgment, regardless of when it was obtained, before being obligated to make payment. Moreover, this procedure does not add extra steps as OCWG argues, but rather just provides the financial responsibility provider sufficient time within which to review a judgment for scope and finality.

ASA/Intercargo and Kemper argue that section 19(b)(2)(C) of OSRA was intended to protect sureties against improperly entered default judgments. They also argue that Congress did not restrict the sureties' ability to contest default judgments and assert that ''as a matter of suretyship law, sureties have the right to deny claims based on judgments which are void, to review a claim for fraud or collusion, and in the case of default judgments, to inquire into the merits of the judgment to determine whether it was proper.'' Further, they state that making a default judgment absolutely binding on a surety represents a change in existing suretyship law. As a consequence, ASA/Intercargo wants an express recognition in the rules that the sureties retain their right to refuse to pay an invalid judgment, suggesting a modification which indicates the Commission is not restricting a surety's common law rights to review, inquire into the merits, or deny coverage of a claim. Alternatively, Kemper suggests a modification to the rule requiring sureties to pay only if a claim was contested and its validity determined on the merits.

The Commission declines to adopt these suggestions, as to do so would vitiate the intent of OSRA. The legislation is not limited to providing relief to claimants only where judgments are contested; many claims against foreign, defunct, or unscrupulous NVOCCs are in fact uncontested. We expect that financial responsibility providers will take these factors into account during the underwriting process. Similarly, OSRA's reliance on court judgments as determinative does not envision that a financial responsibility provider's obligations may be averted should the financial responsibility provider decide to proclaim a judgment invalid. OSRA's only caveat on the financial responsibility provider's requirement to pay is in section 19(b)(3)—that the

damages claimed arise from the OTI's transportation-related activities.

Moreover, § 67(c) of the Restatement (Third) of Suretyship and Guaranty, upon which ASA/Intercargo and Kemper rely, is not definitive as to this issue. Although the comment to that section states

> the probative significance of a judgment obtained by confession, default, or the like is much less than that of a judgment after trial on the merits. * * * Thus, a judgment against the principal obligor obtained by default, confession or the like does not create a presumption in favor of the principal obligor's liability in the subsequent action by the obligee against the secondary obligor; rather such a judgment is evidence only of its rendition,

Restatement (Third) of Suretyship and Guaranty § 67, cmt. c (1996), the analysis further explains that

> Cases vary widely on this point. Some hold that a default judgment is conclusive as to the liability of the secondary obligor. (citation omitted). Others hold that a default judgment is prima facie evidence of the secondary obligor's liability. (citation omitted). Still others hold a default judgment is inadmissible against the secondary obligor. (citation omitted).

Restatement (Third) of Suretyship and Guaranty § 67, cmt. c, reporter's note c (1996). Because suretyship law does not guarantee to sureties the right to deny or limit liability in cases of a default judgment, we decline to adopt such an approach here as advocated by the sureties, especially where the statute suggests no such approach.

Proposed § 515.23(b) provides that the financial responsibility provider shall pay a judgment for damages obtained in an appropriate court ordinarily within ten (10) days. Both ASA/Intercargo and Kemper want this rule to clearly state that payment need not occur until after a final judgment. In addition, both commenters assert that 10 days is insufficient time to review a judgment and suggest thirty (30) days as more appropriate. Moreover, both object to the provision that payment shall be made ''without inquiring into the validity of the claim.'' Both argue that the Report language stating ''the surety company would be expected to pay the judgment from the bond funds, without requiring further evidence of bills of lading or other documentation going to the validity, rather than the subject matter of the claim,'' is no longer valid because OSRA was amended to account for the sureties' interests after the Report was written, and thus this language violates the mandate of section 19(b)(2)(C). Further, they contend that this language does not recognize the sureties' right to refuse payment for void judgments. In particular, both argue that the Commission cannot require a surety to seek to vacate a void judgment in order to deny liability under its bond. ASA/Intercargo points out that sureties are not ordinarily parties to cases against OTIs and do not necessarily have the right to seek to vacate a judgment in such an action.

Section 515.23(b) provides 90 days during which time the financial responsibility provider may review a claim and attempt to reach a settlement with the claimant, regardless of whether the claimant has sought or will seek a court judgment; this procedure applies in either event. (*See* OSRA sections 19(b)(2)(B) and (C)). Payment of damages is due after 90 days. As ASA/Intercargo's suggestion in this regard is well taken, the Commission has amended this provision to clarify that payment under section 19(b)(2)(C) need not be made until after a judgment is final. Under the proposed procedure, the financial responsibility provider would have at least one hundred (100) days before it is required to pay any judgment or claim. We believe that ordinarily this would be sufficient time to research, review and process a claim. We recognize, however, that occasions may arise in which the 90-day negotiation period does not produce a settlement, and a judgment obtained after that period may raise issues not considered upon review of the original claim. Hence, the Commission amends the proposed rule to provide that payment must be made within 30, rather that 10, days of receipt of a final judgment.

Moreover, § 515.23 provides that *ordinarily*, the financial responsibility provider shall pay the judgment within 10 (now 30) days. While the Commission would intend to report occasions of delinquent or non-complying surety companies to the United States Department of the Treasury for appropriate action, it recognizes that on occasion, extraordinary circumstances may exist in which the good faith processing of a judgment may take more than the prescribed period. To that end, the Commission had provided ample periods of time in which the financial responsibility providers may review their rights and options regarding the judgment and take such action as may be available to them. We recognize that these options may vary by jurisdiction, and the Commission does not endeavor to assess the likelihood that a financial responsibility provider will successfully vacate (or effect a vacation through an OTI) a judgment where there are issues of service or other procedural or substantive questions. The Commission's role is simply to provide a procedure that incorporates adequate time for the providers to take such action as is available to them. Where, however, a final judgment stands, the statute clearly provides that the bond, insurance or other surety ''*shall* be available to pay *any* judgment for damages'' against an OTI arising from its transportation-related activities (section 19(b)(2)(C))(emphasis added), and that the judgment ''may not be enforced except to the extent that the damages claimed arise from'' these activities. (Section 19(b)(3)).

Financial responsibility amounts

In proposed § 515.21, the Commission proposes to establish a range of financial responsibility requirements commensurate with the scope of the activities conducted by the different OTIs and the past fitness of OTIs in the performance of intermediary services. Report at 31–32. Thus, OTIs operating as freight forwarders in the United States would be required to establish financial responsibility in the amount of $50,000; OTIs operating as NVOCCs in the United States in the amount of $75,000; and OTIs operating as both freight forwarders and NVOCCs in the United States would be required to establish financial responsibility in the amount of $100,000. Unlicensed foreign-based entities that provide OTI services for transportation to or from the United States, but are not operating ''in the United States'' as defined in proposed § 515.3, would be required to establish financial responsibility in the amount of $150,000. Groups or associations of OTIs would be able to provide financial responsibility for their members with the maximum aggregate amount of $3,000,000.

At the outset, the Commission received comments relating to its proposal that an OTI operating as both freight forwarder and an NVOCC in the United States could obtain a single instrument of financial responsibility in the amount of $100,000. AIFA/TIA points out that this proposal unfairly favors those entities who have combined their freight forwarder and NVOCC operations into a single company for no apparent reason. ASA/Intercargo and Kemper submit that while this type of financial responsibility may reduce the premium for an OTI, it actually offers no other benefits, but in fact, would be risky for the OTI. For example, ASA/Intercargo points out that if an NVOCC's coverage were cancelled, this would also result in cancellation of the freight forwarder portion of the coverage. In addition,

ASA/Intercargo contends, without expressly defined limits of coverage, the Commission would be increasing the penalty amount to $100,000, from $50,000 for freight forwarders and $75,000 for NVOCCs. Further, ASA/Intercargo maintains that in the event that competing claims from both freight forwarders and NVOCCs are made against a bond, the surety would have difficulty determining how the bond should be divided.

The Commission recognizes the problems presented by its proposal. We did not intend to create the appearance in favor of OTIs with joint operations. Nor did we anticipate the potential dual cancellation of the financial responsibility coverage. As a consequence, in the final rule we are removing the joint coverage proposal, and instead, OTIs operating in the United States as both freight forwarders and NVOCCs will continue to secure separate instruments of financial responsibility for their distinct operations. Thus, proposed § 515.21(a)(3) is removed, and proposed §§ 515.21(a)(4) and (a)(5) are redesignated as §§ 515.21(a)(3) and (a)(4). Moreover, even with respect to individual instruments of financial responsibility, the financial responsibility providers are now, and will continue to be, faced with the situation where there are multiple claims on an OTI's financial responsibility. The providers will continue to be required to fairly apportion the amount to address the claims presented.

With respect to the amount of financial responsibility required under this section, OCWG states that it supports the Commission proposal increasing the required levels of financial responsibility, in light of the Commission's recognition that an increasing number of NVOCCs have gone bankrupt or changed company names to avoid their responsibilities. Similarly, CENSA believes that the proposed amounts are consistent with applicable statutory requirements. Yellow supports the proposed amounts for those OTIs operating in the United States, but recommends that the amount for foreign OTIs be raised to $250,000, ''to more accurately reflect the risk involved with these entities.'' Yellow maintains that foreign entities are generally beyond the reach of U.S. law, requiring navigation of the ''often protectionist shoals of foreign laws,'' such that recovery imposes very significant costs not associated with domestic OTIs.

NCBFAA asserts that the proposed amounts for those OTIs operating in the United States are too high and could present financial burdens for smaller companies. Further, NCBFAA does not believe that the higher amounts will protect the public from unscrupulous operators who then subject their customers to carriers' lien claims and similar problems. Conversely, NCBFAA supports a higher amount for foreign, unlicensed OTIs. Noting that Commission press releases indicating its settlements with foreign NVOCCs are in multiples of $150,000 and given Commission experience with these entities, NCBFAA argues that the $150,000 proposed amount is rather modest. Similarly, IANVOCC proposes a minimum of $300,000, perhaps higher, and further suggests subjecting unlicensed NVOCCs to a branch office requirement similar to that for U.S.-based NVOCCs. D.J. Powers also supports the proposed amount for foreign OTIs and advocates requiring an additional amount per branch office, similar to the U.S. requirement, or perhaps a per country increase. In contrast, D.J. Powers finds the proposed amounts applicable to licensed OTIs too high and opines that the cost would be prohibitive for small companies. Worldlink believes that the financial responsibility requirement proposed for unlicensed, foreign OTIs is too low. Arguing that the Commission should ensure that no legitimate claim against these entities should go unpaid, Worldlink submits that an amount less than $1,000,000 would be insufficient.

AIFA/TIA urges the Commission to reconsider the proposed amounts, arguing that they are not supported by adequate facts or data. AIFA/TIA contends that ''high bond amounts penalize small companies and create barriers to entry that limit competition'', and further that some of these companies ''may have to pledge collateral'' for the increased amounts. AIFA/TIA notes that these proposed expenses may not have been budgeted by a number of small companies. OWL also states that the increased amounts for foreign OTIs are not substantiated. OWL suggests instead that adopting a broad definition of ''in the United States'' for licensing purposes and equalizing the bond amounts between foreign and domestic entities is the only way to achieve a proper balance between the licensing requirements imposed by Congress and the circumvention of U.S. law enjoyed by foreign companies. Similarly, NY/NJFFFBA opines that rather than increasing financial responsibility requirements for foreign OTIs, the Commission should instead adopt the broader definition of ''in the United States'' to protect the integrity of the OTI process completely. NY/NJFFFBA further asserts that the Commission failed to follow its Congressional mandate to determine the difference in potential for claims against unlicensed and licensed OTIs, and as such, must justify the difference with historical or other reliable data before implementing differing amounts of financial responsibility. The British Association of Removers argues that imposition of the higher guarantee on foreign NVOCCs is discriminatory and would be unfair to small volume entities who would have trouble meeting the requirements.

NITL states that it understands and appreciates the Commission's concern which would justify the proposed increases, but suggests that the increases would appear to impose substantial additional costs on many small business. NITL further notes that while shippers and carriers are likely to benefit from the increased amounts, they could restrict new companies from entering the OTI business and cause others to leave; thus NITL suggests imposing more modest increases.

Direct Container Line stresses that the Commission did not support the ''apparent expectation'' that the higher level of financial responsibility would result in increased enforcement action against unscrupulous foreign-based entities. Similarly, Charter contends that the increased amounts will only serve to punish the law-abiding NVOCCs, benefitting nobody but the insurance companies. Glad Freight also laments the increased financial responsibility requirements and would rather see stepped up enforcement to ensure compliance with the licensing and financial responsibility requirements.

The Commission adopts in the final rule the amounts of financial responsibility set forth in the proposed rule, with the exception of the joint $100,000 level previously discussed. We believe that these amounts are consistent with the obligations undertaken by OTIs and will better serve the shipping public, whom they are designed to protect and compensate for damage. Moreover, these amounts are an accurate reflection of the intent of OSRA to require OTIs to establish financial responsibility commensurate with the scope of their duties.

In response to comments that these amounts could pose a burden on small businesses, we believe that the burden of securing additional financial responsibility, as more fully detailed in the Regulatory Flexibility Analysis discussed, *infra*, is outweighed by the benefit to the shipping public. The

estimated burden per individual entity is not such that it will preclude from entering or remaining in the industry, those OTIs who are capable of satisfying their obligations, which was the goal of the NVOCC bonding requirement when it originated in 1990. *See* 136 Cong. Rec. E2210 (January 28, 1990) (statement of Rep. Jones). Moreover, when NVOCC bonds were implemented in 1990, Congressman Jones indicated that the $50,000 level was a starting point, which amount the Commission has not raised since that time. *Id.* Additionally, we have set forth provisions in the interim portion of this rulemaking allowing for the licensing of foreign NVOCCs, whose financial responsibility would, as a consequence, be at the lower $75,000 amount. Therefore, § 515.21 is adopted as proposed, subject to the modification relating to the $100,000 level discussed earlier.

With respect to branch offices, APL contends that the requirement that OTIs increase their financial responsibility by $10,000 per unincorporated branch office is unwarranted and counterintuitive. APL asserts that there is no logical correlation between the number of branch offices an OTI maintains and its propensity to default on its obligations. APL further points out that it has been a frequent critic of foreign governmental requirements which appear protectionist in nature. The provisions to which APL objects are carried over from existing freight forwarder rules. The Commission did not specifically solicit comment on this issue, and is reluctant to address APL's suggestion without its having been more fully addressed by industry commenters. Therefore, because consideration of branch office financial responsibility obligations is not necessary to the implementation of OSRA, the existing rules will not be amended in this regard.

ASA/Intercargo proposes amending § 515.21(b), relating to the amount of financial responsibility required by groups, to read ''In such cases a group or association must establish financial responsibility *in an amount equal to the lesser of* the amount required by paragraph (a) of this section for each member or $3,000,000 in the aggregate.'' We adopt this suggestion in order to clarify that groups with few members may establish an aggregate amount less than $3,000,000. This should also address DITTO's objection that the $3,000,000 amount will allow claims to be inflated. This amount refers to group bonds, the limits of liability under which are the same as if the financial responsibility were secured individually.

ASA/Intercargo also suggests amending § 515.22(d)(5) as follows:

515.22—Proof of financial responsibility (d)(5)(ii) *be for an amount up to the amount determined in accordance with § 515.21(b), taking into account a member's individual financial responsibility coverage already in place.* In the event of a claim against a group bond, the bond must be replenished up to the original amount of coverage within 30 days of payment of the claim; and (iii) *be in excess of a member's individual financial responsibility coverage already in place;* and

ASA/Intercargo contends that these changes are necessary because the financial responsibility requirements have already been set forth in § 515.21. This section contemplates supplemental coverage and the suggested language clarifies that the supplemental amount allows the member to aggregate coverage to meet the required limit. Moreover, the amendment clearly indicates that an individual's primary coverage is its other financial responsibility already in place and the supplemental coverage is available after the primary coverage has been exhausted. The Commission believes ASA/Intercargo's suggestions have merit and adopts them accordingly. Finally, the Commission adopts ASA/Intercargo's suggestion that with respect to group bond form FMC–69, it is more appropriate to use ''Appendix A'' to set forth the maximum limits of liability for each member OTI and in the aggregate.

Proof of Compliance

Section 10(b)(11) of the 1984 Act prohibits a common carrier from transporting cargo for an NVOCC unless that common carrier has determined that the NVOCC has a tariff and financial responsibility. In order to aid the common carriers in complying with this section, the Commission proposed in § 515.27(d) to publish at its website a list of the location of all carrier and conference tariffs and a list of OTIs who have furnished evidence of financial responsibility. The Commission specifically requested comments on this issue, and as none were received, the proposed language is carried forward in the final rule.

Compliance With Higher Bond Amounts

In accordance with § 515.21, all OTIs will need to provide increased financial responsibility by May 1, 1999. C.A. Shea, an insurance broker who currently administers over five hundred (500) bonds filed with the Commission, and NY/NJFFFBA contend that there is insufficient time, between March 1, 1999 and May 1, 1999, in which to obtain underwriting approval to execute increased financial responsibility in accordance with the new regulations. NY/NJFFFBA suggests that OTIs be allowed to continue to operate if they provide the Commission with proof that they have timely applied for the increased financial responsibility. C.A. Shea requests that the Commission ''phase in the replacement of the existing bonds over a period of time, perhaps on renewal, or by special rider to alleviate an unnecessary burden.''

The Commission is mindful of the expressed concerns, and, thus, allows OTIs and financial responsibility providers to increase their financial responsibility effective May 1, 1999, by rider to their existing instruments of financial responsibility. The rider to the instrument of financial responsibility shall indicate that the liability incurred under the instrument of financial responsibility shall be consistent with OSRA and 46 CFR part 515. The financial responsibility provider shall file the rider with the Commission by May 1, 1999. Financial responsibility providers shall then issue and file with the Commission new instruments of financial responsibility as required by 46 CFR part 515 at the time when the OTIs would ordinarily renew their instruments of financial responsibility.

Financial Responsibility Forms

Appendices A, B, C and D set forth the financial responsibility forms FMC–48 (surety bond), FMC–67 (insurance), FMC–68 (guaranty), and FMC–69 (group surety bond), respectively, to be used by the OTI and financial responsibility provider in contracting for financial responsibility. NVOCCs or freight forwarders may use the forms interchangeably and would choose a specific form according to the type of financial responsibility they obtain. ASA/Intercargo [2] contends that the Commission should adopt different surety bond forms for NVOCCs and freight forwarders because they are distinct entities that are required to obtain different amounts of coverage. As ASA notes, ''[r]equiring separate bond forms for each OTI activity will provide the shipping public with concise, clean, and unambiguous forms that accurately describe the activities that an OTI is performing or providing.''

The Commission agrees with ASA/Intercargo's suggestion and revises all four of the financial responsibility forms to require the OTI to indicate if it is obtaining the financial responsibility as an NVOCC or a freight forwarder. None of the proposed forms or the suggested

[2] C.A. Shea supports the comments made by Kemper and ''other sureties'' as to the proposed bond language.

surety bond forms proposed by ASA/Intercargo further detail the activities of the OTI, either as an NVOCC or a freight forwarder. The proposed forms do indicate that the financial responsibility shall be available to pay for damages arising from ''transportation-related activities.'' As the revised definition of ''transportation-related activities,'' § 515.2(w), clarifies that it applies to the services of freight forwarders and NVOCCs separately as further defined in §§ 515.2(i) and (l) respectively, it is unnecessary to detail these activities on the financial responsibility forms themselves. Therefore, it is sufficient to require that the OTI indicate on the form whether it is an NVOCC or a freight forwarder, and it is unnecessary to create different financial responsibility forms for NVOCCs and freight forwarders.

ASA/Intercargo and Kemper further object to the language in the surety bond form FMC–48 which provides that the surety ''consents to be sued'' in the event that the OTI or surety has not made payment on a final judgment. Neither OSRA nor proposed 46 CFR part 515, they argue, requires that a surety consent to being sued, and the Commission has not provided any justification for adding this language. Furthermore, they assert that the current Form FMC–48 does not contain the ''consents to be sued'' language, even though similar language is contained in the existing insurance and guaranty forms. The Commission, they contend, cannot add that language to the surety bond form merely because it is in the insurance and guaranty forms, because ''these forms of undertaking are different than surety undertakings.'' In addition, other government agencies' regulations and bond forms, they aver, do not contain such language. ASA/Intercargo and Kemper further argue that the ''consents to be sued'' language conflicts with the United States Department of the Treasury's procedures, under 31 CFR §§ 223.18–223.22, for complaining against sureties who fail to honor their bonds.

While the Commission acknowledges that the relationships and commitments made by entering a surety agreement are separate and distinct from those made in insurance and guaranty agreements, ASA/Intercargo's arguments to remove the ''consents to be sued'' language from Form FMC–48 are unpersuasive. The language does not alter the surety's obligations arising under the bond. Simply because the surety, insurance and guaranty are different types of agreements does not mean that a claimant who receives a final judgment against an OTI cannot sue a surety in the event that it fails to honor a valid judgment. Moreover, removing that language would not prevent a claimant from doing so. In addition, the Commission is not prevented from adding such language in this proceeding simply because it had not been in the earlier bond.

Further, the language does not conflict with the Department of the Treasury regulations providing procedures for complaining against a surety who has failed to honor its responsibilities under the bond, as Kemper and ASA/Intercargo argue. Part 223 of 31 CFR ensures that the bond companies doing business with the United States government, via underwriting surety bonds required by federal law, are in good standing. Sections 223.18–223.22 of 31 CFR specifically provide that a federal agency, not a private claimant, that is unable to collect on a bond to its satisfaction may turn the matter over to the Department of the Treasury by making a ''report'' of the claim. The language in the bond form would not subvert that process. Therefore, the Commission declines Kemper and ASA/Intercargo's request to remove the above paragraph from Form FMC–48.

Kemper further objects to the requirement in Form FMC–48 that the surety must pay on a final judgment within 10 days. Kemper asserts that only 10 days after being notified of the claimant's judgment the surety consents to being sued in almost any state, and, therefore, ''[t]his language, in addition to being in direct contrast to the regulations and the Act itself, defeats the purpose of providing for the regulations an alternate procedure rather than the claimant immediately seeking judgment.''

Kemper misreads the language as nullifying the procedure set forth in § 515.23(b), which requires the claimant to attempt to resolve the claim with the financial responsibility provider within 90 days prior to seeking payment on a judgment. This conforms with the language in Form FMC–48, which states that the Surety consents to be sued after claimant has obtained a final judgment *and* after claimant has complied with § 515.23(b). As discussed, *supra,* the 10 day period, which is revised to 30 days, is in addition to the 90-day settlement period. However, to the extent that it may be unclear what the ''within 10 [now 30] days'' language in Form FMC–48 modifies, the Commission revises FMC–48 to remove that phrase. This modification does not, however, alter the requirement in § 515.23(b) that the financial responsibility provider must ordinarily pay the judgment within 30 days of the final judgment.

Moreover, Kemper's complaint that the surety would consent to being sued ''in any state'' is irrelevant because where a complaint may be brought is determined by the particular state's laws of jurisdiction. The surety must be aware that a court may find it has jurisdiction over it based on its contacts with that state. Any company, based upon the reach of its business, takes the risk of being sued in a state that it may not consider its principal place of business. That is a risk a company assumes, however, and it must pay the consequences of that risk, including being sued in another state. The Commission has no ability to protect a surety from being sued in a particular state and, therefore, declines to change the rule.

Finally, ASA/Intercargo contends that the language that a surety's obligation shall not exceed ''the amount per group or association of OTIs set forth in 46 CFR § 515.21'' in Form FMC–48 should also be deleted. The inclusion of group or association bond form language, they argue, is improper because § 515.22(d)(6) provides that Form FMC–69 is the only form a group or association may use in obtaining coverage under a surety bond (unlike group or association coverage under insurance or a guaranty). ASA/Intercargo's comment is well-founded, and, therefore, the Commission revises Form FMC–48 accordingly.

Duties and Responsibilities of OTIs

Proposed § 515.31 set forth the duties of freight forwarders and NVOCCs to their principal and shipper, respectively, and the Commission generally. In doing so, the Commission incorporated many of the duties from 46 CFR §§ 510.21 and 510.22 that applied to freight forwarders and applied them to NVOCCs as well, so that all licensees would be subjected to the same responsibilities. Many commenters objected to this rationale for applying certain duties to NVOCCs and argued that many of these duties should not be applied to NVOCCs at all. OCWG, however, supports § 515.31 in its entirety.

NY/NJFFFBA, Worldlink, OWL, NAI, Charter, and D.J. Powers contend that freight forwarders and NVOCCs are separate and distinct legal and commercial entities, regardless of their common designation as OTIs and the fact that they would both now be licensed by the Commission. Congress intended for freight forwarders and NVOCCs to continue to be considered as such, NY/NJFFFBA, OWL, NAI, and

Charter argue, and, therefore, maintained the separate definitions of freight forwarders and NVOCCs within the general definition of OTI. As OWL contends that ''while perhaps recognizing the ''OTI'' as a creature of statutory construction, it is nothing more than a mere umbrella under which the legal distinction of both the ''ocean freight forwarder'' and ''[NVOCC]'' are preserved.''[3] Furthermore, IANVOCC and Charter aver that Congress did not mandate that any additional duties be imposed upon NVOCCs, but rather mandated that the Commission should avoid overly burdensome regulation.

NY/NJFFFBA, IANVOCC, NAI, Charter, Yellow, and D.J. Powers further argue that an NVOCC is not an agent who owes a fiduciary duty to its shipper-principal, like a freight forwarder, but rather the NVOCC is a principal in its relationship to its shipper-customer.[4] As such, Charter, IANVOCC and NAI contend, the NVOCC is a carrier and has the same relationship with its shipper as does a vessel-operating common carrier (''VOCC''). Thus, IANVOCC avers, ''while NVOCCs have a general duty to act in a law-abiding fashion, they are not subject to the fiduciary obligations of an agent.'' Charter, IANVOCC, Yellow, and NAI argue that the application of a freight forwarder's duties and responsibilities to an NVOCC is therefore inappropriate and would be harmful to an NVOCC's operations.

Proposed §§ 515.31(a) and (b)

IANVOCC and Worldlink do not oppose § 515.31(a), but contend that the rule should be revised to require a licensee's number to appear only once on a shipping document. This would avoid, they argue, unnecessary duplication in the case when a licensee's name appears as a consignee, shipper, and notify party on a single document. Charter is the only commenter who argues that the section should be deleted in its entirety as it applies to NVOCCs.

Section 515.31(a) remains applicable to NVOCCs, and the Commission agrees with the commenters that a licensed OTI's license number need only appear once on a shipping document. Accordingly, § 515.31(a) is revised to replace the word ''[w]herever'' at the beginning of the second sentence with the word ''when.'' This revision, however, does not allow a licensee to provide its license number on only one document in a single transaction if there are several shipping documents processed in the course of that transaction. Every document where a licensee's name appears must also include the licensee's license number.

NY/NJFFFBA, OWL, D.J. Powers, Yellow, and NAI argue that § 515.31(b)(2), the requirement that an OTI's status as, or affiliation with, a shipper or seller of goods be identified on its office stationary and billing forms, should be removed from the rule as it applies to NVOCCs. Section 515.31(b)(2) was created, NY/NJFFFBA, OWL, and NAI aver, because freight forwarders are prohibited from collecting compensation on shipments in which they have a beneficial interest. They argue, therefore, that this section has no applicability to an NVOCC, who does not collect carrier compensation. Yellow further avers that it would have the effect of treating NVOCCs and VOCCs differently because this duty is not imposed upon VOCCs, and would thus hinder competition in contravention of the intent of OSRA. Worldlink and IANVOCC, on the other hand, contend that this section should be revised so that it is not applicable to NVOCCs unless they are beneficial owners of cargo, while Charter argues that the entire § 515.31(b) should be deleted as to NVOCCs.

The Commission agrees that § 515.31(b)(2) is meant to address the prohibition against the collection of carrier compensation by a freight forwarder on shipments in which it has a beneficial interest, as reflected in section 19(d)(4) of the 1984 Act (redesignated as section 19(e)(3) in OSRA). NVOCCs do not collect carrier compensation and, therefore, the Commission revises § 515.31(b)(2) accordingly. The Commission, however, does not agree that § 515.31(b)(1) should be deleted as it applies to NVOCCs. All licensees, including NVOCCs, should be required to imprint their license number on their office stationary and billing forms. It serves to notify the public and shippers that an OTI is licensed by the Commission. In light of this change, § 515.31(b)(1) is redesignated as § 515.31(b), and § 515.31(b)(2) is redesignated as § 515.32(a) of renamed § 515.32, Freight forwarder duties. Accordingly, proposed § 515.32, Records required to be kept, will be renumbered as § 515.33, and proposed § 515.33, Regulated Persons Index, will be renumbered as § 515.34.

Proposed § 515.31(e)

The first sentence of § 515.31(e) prohibits licensees from entering any arrangement or agreement with an unlicensed person that confers any fee, compensation or other benefit upon that unlicensed person. NY/NJFFFBA, AIFA/TIA, APL, Worldlink, Cargo Brokers, Charter, D.J. Powers, and Yellow oppose this section as it applies to NVOCCs, while OWL opposes it as it applies to all OTIs. They argue that this section, read literally, would allow licensees only to do business with other licensees, thus preventing a licensee from entering arrangements with warehouses, truckers, consolidators, container lessors, and others who are unlicensed but necessary to an NVOCC's operations.

This regulation was originally intended to address the issue of compensation and fee sharing as it relates to freight forwarders. The Commission did not intend ''to prohibit forwarders from compensating bona fide sales agents for services rendered, provided that such services are restricted to soliciting and obtaining business for the forwarder and are not otherwise prohibited by law.'' 49 FR 18842, May 3, 1984 (Gen. Order 4, Revised, Docket No. 84–19, *Licensing of Ocean Freight Forwarders*). While the Commission believes that this would not adversely affect NVOCCs from entering arrangements with those unlicensed persons providing trucking services and the like, it agrees that the rule is unnecessary as it applies to NVOCCs because they do not collect carrier compensation or forwarding fees and thus are not subject to the limitations placed on freight forwarders regarding such payments.

The second sentence of § 515.31(e) provides that an OTI, when employed by the agent of the person paying for its services, must provide a copy of the invoice to both the agent and the person paying for those services. NY/NJFFFBA and Worldlink also object to this language as it applies to NVOCCs. This is not applicable to NVOCCs, they argue, who routinely bill third persons in the course of a shipment. Further, Worldlink asserts that it would be onerous to require NVOCCs to ''determine which of their customers are simply passing through the transportation charges and which are ultimately responsible for their payment.''

The Commission again recognizes that this regulation was meant to address freight forwarders and the issues related to fee sharing. As NVOCC's operations do not encompass these issues, it is

[3] OWL emphasizes this point by analogizing it to the recent decision of the European Commission regarding the joint inland rate setting authority of the Trans-Atlantic Conference Agreement.

[4] NAI, NY/NJFFFBA, and IANVOCC point out the extensive law regarding the freight forwarder as the agent of its shipper-principal and its fiduciary duties as such.

unnecessary to impose this regulation on them. Therefore, proposed § 515.31(e) will be removed as it applies to NVOCCs and will be redesignated as § 515.32(b).

Proposed § 515.31(g) and (k)

NY/NJFFFBA, IANVOCC, AIFA/TIA, OWL, NAI, Charter, D.J. Powers, and Yellow argue that § 515.31(g), which provides that no licensee shall withhold information from its principal or shipper concerning an OTI transaction and that such licensee must use due diligence to assure that information is accurate, should be removed from the rule as it applies to NVOCCs. Along with Cargo Brokers, they also aver that § 515.31(k), which requires that all licensees, upon the request of their principals or shippers, shall provide a complete breakout of their charges and any documents pertaining to the invoice, should be removed as it applies to NVOCCs. APL and Worldlink support these sections only to the extent that they require licensees to assure the accuracy of information they provide to their shippers, but contend that to the extent they prohibit NVOCCs from withholding information from their shippers or require NVOCCs to provide their shippers a breakdown of charges, the provisions are too broad.

All of the aforementioned commenters argue that an NVOCC is not an agent in a fiduciary relationship to its shipper, as is a freight forwarder, and does not have a duty to impart this information to its shippers. An NVOCC does not confer this type of information to its shipper in the general course of business, NY/NJFFFBA and OWL assert, rather it distributes only a bill of lading which is based on information received from its shipper or its forwarding agent. NY/NJFFFBA, IANVOCC, AIFA/TIA, OWL, NAI, Charter, D.J. Powers, Yellow, and Worldlink further argue that it would be harmful to an NVOCC's business to disclose all of its information, i.e., pricing strategies, vendor lists and other proprietary information. It would put NVOCCs at a competitive disadvantage with VOCCs, they contend, who would still be allowed to maintain the confidentiality of that information. Furthermore, they argue such disclosure provisions would nullify NVOCCs' ability to enter confidential service contracts as shippers with VOCCs.

The Commission agrees that §§ 515.31(g) and (k) were originally created to apply to freight forwarders who, as agents, owe a fiduciary duty to disclose all pricing information to their shipper-principals. NVOCCs, in contrast, are in the same position, as carrier-principal, as VOCCs in relationship to their shippers. Thus, the traditional duties applicable to freight forwarders regarding pricing information cannot be automatically applied to NVOCCs because each industry faces a different competitive environment. As the commenters correctly point out, disclosing such information would be ''commercial suicide.'' Furthermore, these sections would undermine OSRA's new confidential service contract environment. Moreover, NVOCCs would still be required to impart true and accurate information to their shipper-customers regarding any OTI transaction under proposed § 515.31(f). Deletion of the duties in §§ 515.31(g) and (k) as they apply to NVOCCs would, therefore, not exempt NVOCCs from this obligation. Sections 515.31(g) and (k) are revised to apply only to freight forwarders and are redesignated as §§ 515.32(c) and (d) respectively.

Proposed §§ 515.31(c), (d), (f), (h), (i), (j), and (l)

Section 515.31(c) prohibits licensed OTIs from permitting their licenses to be used by persons not employed by the OTI, but provides that an unincorporated branch office may use its parent's license name and number if it reports this information to the Commission and it is covered by the requisite increased financial responsibility. Worldlink seeks to revise this section to add language that would allow separately incorporated branch offices that are wholly owned, directly or indirectly, by the licensee to use the license name and number of the parent corporation. Charter opposes this section as it applies to NVOCCs in its entirety. As discussed, *supra*, regarding §§ 515.3 and 515.21, separately incorporated branch offices are required to obtain their own licenses and financial responsibility, and, therefore, Worldlink's request is denied. This section remains designated as § 515.31(c).

As to §§ 515.31(d), (f), (h), (i), (j), Charter is the only commenter who opposes their application to NVOCCs in their entirety and argues that they should be removed. IANVOCC and Worldlink contend that § 515.31(d), which limits the arrangements licensees can make with OTIs whose licenses have been revoked, is unfair and should be removed unless the Commission establishes and publishes a list of those persons on its website. APL supports §§ 515.31(f) and (h) to the extent that they prohibit OTIs from providing false information. Both Charter and NAI assert that § 515.31(l), which requires each licensee to account to its principal or shipper for various sums due such principal or shipper due to modifications in monies paid or received, should be removed as it applies to NVOCCs. Charter argues generally that there is no factual basis for imposing these freight forwarder regulations on NVOCCs, and thus they should be deleted or at the very least the Commission must examine and justify why additional duties should be applied to NVOCCs. NAI asserts that logic suggests that § 515.31(l) should be imposed on VOCCs as well, but then argues that neither NVOCCs nor VOCCs should be subjected to providing a refund to a shipper simply because they have developed a more cost-effective manner in which to provide their services.

Sections 515.31(d), (f), (h), (i), (j), and (l) impose duties upon OTIs that are not freight forwarder specific, unless indicated within a specific subsection. (*See* § 515.31(d)(3) (prohibiting a licensee from sharing forwarding fees or freight compensation with an OTI whose license has been revoked)). Furthermore, these duties do not rely on the fiduciary relationship between a freight forwarder as agent and a shipper as its principal. Therefore, the objection that these duties are inapplicable to NVOCCs because they are not the agents of their shippers is inappropriate and, thus, does not justify removing these sections from the final rule as they apply to NVOCCs. Furthermore, in regard to § 515.31(d), there is no need for the Commission to publish a list on its website of those persons whose licenses have been revoked, because under § 515.16 the Commission sends that information to the **Federal Register** quarterly, at the very least, for publication in paper format and electronic format on the **Federal Register**'s website at www.nara.gov/fedreg. This method has proven successful in notifying the public of OTIs whose licenses have been revoked, thus, the Commission will continue this procedure under the final rule. In accordance with the other revisions to § 515.31, §§ 515.31(f), (h), (i), (j), and (l) will be redesignated as §§ 515.31(e), (f), (g), (h), and (i) respectively. Section 515.31(d) remains designated as such.

Proposed § 515.32

Proposed § 515.32 set forth the recordkeeping requirements of licensed freight forwarders and NVOCCs, which requires licensees to maintain all records and books of account in connection with its OTI business in the United States for a period of five (5) years. NAI and AIFA/TIA object to this

requirement as it applies to NVOCCs. IANVOCC also opposes the rule as it applies to NVOCCs, except for the provision that they be required to maintain a separate file for each shipment. APL opposes the rule as it applies to all OTIs, arguing that it is unnecessary for the Commission to ''micromanage'' these entities.

IANVOCC and NAI point out that an NVOCC is not in a fiduciary relationship with its shipper like the freight forwarder who handles funds in trust as agent for its shipper-principal. IANVOCC contends that ''[a]n NVOCC does not incur expenses on behalf of, or as agent for, its customers, but rather as principal in the ordinary course of its commercial operations.'' As such, IANVOCC asserts, the Commission has no regulatory concern with the financial aspects of the NVOCC's business. AIFA/TIA further argues that since most NVOCC shipment files are maintained at the point of origin, which is generally not the United States, it would almost be an impossibility for NVOCCs to transport those files to the United States for maintenance.

Yellow, D.J. Powers, Worldlink, and NCBFAA do not object to the recordkeeping requirement as it applies to NVOCCs. They argue, however, in conjunction with IANVOCC as the rule applies to freight forwarders, that the Commission should permit OTIs the option of maintaining their records in electronic form as an alternative to paper form. NCBFAA also suggests that the Commission clarify that the recordkeeping requirements of the rule are independent of other federal agencies that may have different retention requirements that could be applicable to OTIs.

As discussed, *supra*, the NVOCC is not in a fiduciary relationship with its shipper as is the freight forwarder, thus it is improper to automatically impose the duties of freight forwarders which are necessary to their agency relationship with their shippers upon NVOCCs. The Commission does not need to oversee the financial dealings of NVOCCs, as IANVOCC argues, and as such revises proposed § 515.32 to apply only to freight forwarders. The Commission recognizes its own requirements for and the industry's evolution toward electronic media and, thus, revises proposed § 515.32 to enable licensed freight forwarders to maintain their records electronically if they so desire. The electronic records, however, must be made readily available to the Commission in a usable form, and it is the licensee's responsibility to insure that those electronic records are no less accessible than if they were maintained in paper form. Furthermore, the Commission revises proposed § 515.32 to incorporate NCBFAA's suggestion to clarify that the recordkeeping requirements are independent of the retention requirements of other federal agencies. In accordance with the changes to proposed § 515.31, § 515.32 will be redesignated as § 515.33.

In a related issue, D.J. Powers contends that the term ''agent'' should be defined in the rule because it relates to proposed §§ 515.31 and 515.32 specifically. The Commission declines to define the term agent because the term is used in this part to reflect the large body of agency law. The Commission does not want to inappropriately alter that definition, thus limiting or conflicting with the law relied on by the shipping industry in applying these regulations.

In-Plant Arrangements and Electronic Data Interchange

The Commission codified its decision in *In re: The Impact of Modern Technology on the Customs and Practices of the Freight Forwarding Industry—Petition for Rulemaking or Declaratory Order,* 28 S.R.R. 418 (1998), with regard to in-plant arrangements and electronic data interchange (''EDI'') in proposed §§ 515.41(e) and 515.42(e), respectively. Section 515.41(e) allows a licensed freight forwarder to place its employee on the premises of its principal as part of a package of services so long as the arrangement is reduced to writing in a special contract and it is not an artifice for payment or other unlawful benefit to the principal. Section 515.42(e) permits a licensed freight forwarder to own, operate or maintain an EDI-based computer system in its forwarding business and to collect carrier compensation if the forwarder performs value-added services.

NCBFAA commends the Commission for officially recognizing the use of in-plants and EDI and asserts that the rulemaking ''correctly endorsed the provisions of these services to OTI customers, while providing a structure that will enable the Commission to ensure that services are conducted within the constraints of the Shipping Act.'' NY/NJFFFBA supports the in-plant rule as it benefits the forwarding industry and the shippers they serve; however, it argues that the written agreement requirement is burdensome, intrusive and in contravention of the policies of the 1984 Act and OSRA to place ''a greater reliance on the marketplace.'' The parties should be allowed to reduce their agreement to writing, it contends, if they need to do so, but it should not be mandated by the Commission. APL objects to § 515.41 generally and argues the entire section should be removed.

In deciding whether to recognize the legitimacy of in-plant arrangements, the Commission carefully weighed the benefits of these arrangements to freight forwarders with the prohibitions of the 1984 Act and accompanying regulations against compensation and fee sharing. The Commission agrees with the NCBFAA that § 515.41(e) sufficiently addresses both of these concerns by allowing freight forwarders to use in-plants while providing the Commission the ability to determine if these arrangements are being implemented in accordance with the 1984 Act and the accompanying regulations. We believe § 515.41(e) allows freight forwarders far more leniency in developing these arrangements than if the Commission attempted to address every possible permutation of in-plant arrangements in a rulemaking. Therefore, in order to determine the parameters of a particular arrangement it is necessary for the freight forwarders and shippers to reduce the agreement to writing. Furthermore, NY/NJFFFBA incorrectly argues that the parties should be able to decide whether they want to reduce their agreement to writing. An in-plant arrangement is exactly the type of arrangement envisioned by proposed § 515.32(d) (requiring that copies or memorandum of all special arrangements or contracts between freight forwarders and their shipper-principals be maintained by the freight forwarder). The Commission therefore declines to remove the writing requirement of § 515.41(e) or § 515.41 in its entirety.

Final Regulatory Flexibility Analysis

(1) A Succinct Statement of the Need for and Objectives of the Rule

The Commission is adding new regulations establishing licensing and financial responsibility requirements for Ocean Transportation Intermediaries (''OTIs'') in accordance with the Shipping Act of 1984, 46 U.S.C. app. 1701 *et seq.*, as modified by Public Law 105–258, the Ocean Shipping Reform Act of 1998 (''OSRA''), and section 424 of Public Law 105–383, The Coast Guard Authorization Act of 1998.

OSRA amends the Shipping Act of 1984 in several respects relating to Ocean Freight Forwarders (''OFFs'') and Non-Vessel-Operating Common Carriers (''NVOCCs''). The Commission proposes new regulations, at 46 CFR part 515, to implement changes effectuated by OSRA.

OSRA requires that all OTIs in the United States be licensed by the Commission. Further, all OTIs will be required to establish their financial responsibility before performing any intermediary services in the United States. The bond, surety, or other insurance obtained pursuant to this part shall be available to pay for damages suffered by ocean common carriers, shippers, and others, arising from the transportation-related activities of the covered OTIs. S. Rep. No. 105–61, 105th Cong., 1st Sess., at 31 (1997) (''Report'').

The Report specifically indicates that the bonds, or other instruments of financial responsibility, are intended to cover liabilities related to service contract obligations, as well as damages resulting from loss or conversion of cargo, from the negligence or complicity of the insured entity, and from nonperformance of services. At the direction of the Report, the final rule establishes a range of financial responsibility requirements commensurate with the scope of the activities conducted by various OTIs and the past fitness of OTIs in the performance of intermediary duties.

(2) A Summary of the Significant Issues Raised by Public Comments in Response to the Initial Regulatory Flexibility Analysis, a Summary of the Agency's Assessment of such Issues and a Statement of any Changes Made in the Proposed Rule as a Result of such Comments

In the Initial Regulatory Flexibility Analysis (' IRFA'') appended to the proposed rule, the Commission invited comments in order to ensure that every possible aspect of the economic impact on small businesses would be considered. Specifically, comments were solicited regarding the effects of the cost of increased collateral and premium requirements on OTIs in the proposed rule. Several commenters to the proposed rule, including the National Industrial Transportation League (at p. 6), the National Customs Brokers & Forwarders Association of America, Inc. (''NCBFAA'') (at p. 5), and the American International Freight Association & Transportation Intermediaries Association (at p. 6), commented that the Rulemaking could pose an undue financial burden on small companies. The Commission clearly recognizes that the Rulemaking would impose a burden, in varying degrees, on small OFFs and NVOCCs. However, as discussed in the Supplementary Information to the final rule, the Commission has incorporated several of the suggestions in the comments to the proposed rule which will make the final rule less burdensome, while still complying with the spirit of OSRA. The Commission believes that the final rule is justified and necessary in light of the legislative requirement to effect the changes, and because of the benefit to the shipping public and to carriers gained by licensing and requiring financial responsibility of all OTIs.

The American Surety Association/ Intercargo (at p. 36) and Kemper Insurance Companies (at p. 16) commented that portions of the proposed rule duplicated, overlapped, or conflicted with existing Federal rules, such as the Carriage of Goods by Sea Act (''COGSA'') and Treasury Department regulations. The Supplementary Information to the final rule contains a thorough discussion of how the Rulemaking does not conflict with Treasury Department regulations, or any other relevant Federal, state, or local government rules. Further, the Supplementary Information discusses how certain terms contained in the proposed rule have been amended so as not to conflict with COGSA.

The NCBFAA (at p. 3) commented that the Commission failed to include an estimate for the costs associated with having a new license number printed on stationery, shipping documents, and billing forms. As discussed in the Supplementary Information to the final rule, although new licenses will be issued to indicate whether operators are acting as OFFs or NVOCCs, existing OFFs will retain their current license numbers and will not be required to reprint their business documents.

Other substantive issues that were raised to the proposed rule, but which were not specifically in response to the IRFA, are thoroughly addressed in the Supplementary Information to the final rule.

(3) A Description and an Estimate of the Number of Small Businesses to which the Rule Will Apply or an Explanation of Why No Such Estimate Is Available

To determine whether a business should be considered a small entity, the Small Business Administration (''SBA'') has established regulatory definitions of small businesses (13 CFR Part 121, FR January 31, 1996). Businesses classified in the Standard Industrial Classification code 4731, including OFFs and NVOCCs, are evaluated by their annual receipts (gross annual revenues). OFFs and NVOCCs with less than $18.5 million in annual receipts are considered small businesses by SBA. The Commission does not have OTI revenue data readily available, but, in general, is aware that while most OTIs are small operators, a few OTIs handle the bulk of the intermediary cargo in the U.S. trades. Without specific OTI revenue data, however, the Commission assumes that most, if not all, OTIs have revenues of less than $18.5 million, and are considered to be small businesses.

(4) A Description of the Projected Reporting, Recordkeeping and Other Compliance Requirements of the Rule, Including an Estimate of the Classes of Small Entities that Will Be Subject to the Requirement and the Types of Professional Skills Necessary for the Preparation of the Report or Record

It is estimated that the final rule will impose, in varying degrees, a reporting burden on the entire OTI universe. The burden is calculated on the estimated amount of cost and time necessary to comply with various requirements of 46 CFR part 515. Calculated below are the estimated costs resulting from the final rule. Largely because the final rule contains several substantive changes from the proposed rule, some of the cost estimates presented below differ from those presented in the IRFA.

Cost to the Government

The Commission does not anticipate hiring any additional staff to administer changes occurring from the final rule. The additional burden to the government, *i.e.*, the Commission, as a result of the final rule will be absorbed by existing Commission staff.

Cost of Filing Time

The final rule changes the Commission's rules by requiring all entities to increase their financial responsibility. It also requires NVOCCs in the United States to be licensed with the FMC, and OFFs also operating as NVOCCs to acquire a separate FMC license for their NVOCC activities.

Based on a survey conducted by the Commission, it is estimated that the average hourly labor cost to file (or amend) an instrument of financial responsibility, or complete a new (or amended) license application, is $41. Further, it is estimated to take OFFs who are new entrants approximately 3.5 hours to obtain an instrument of financial responsibility and complete a new license application at an average labor cost to the respondent of $144. This cost takes into account time to gather information and complete the application form, as well as time to comply with the requirements of the rules. Since the licensing application form and financial responsibility procedures will remain substantively unchanged under the final rule, it is estimated that the additional labor cost

of the final rule for each NVOCC in the United States will be $144 in the first year.

Based on the Commission's survey, it is estimated that each OFF also operating as an NVOCC would require 1.5 hours per year to amend its application and its financial responsibility at an average labor cost to the respondent of $62 in the first year. Further, it would take each entity operating solely as an OFF, and each foreign-based NVOCC, 0.5 hours of staff time to increase its financial responsibility at an average labor cost to the respondent of $21 in the first year.

The total additional labor cost of the final rule is expected to reach $280,000 in the first year. In subsequent years, since all operating entities will be licensed, and will have increased their financial responsibility, the total labor cost is expected to decrease substantially.

Cost of Licensing Fee

The Commission's current user fee for processing a new application is $778, and $362 for an amendment. The final rule changes the current requirements by requiring NVOCCs in the United States to file a new application to become licensed. Further, OFFs also operating as NVOCCs will be required to amend their licenses. However, since licensing fees do not change under the final rule, OFFs in the U.S. export trade that are already required to be licensed with the FMC will not be affected in this regard. Further, foreign-based NVOCCs are not required to be licensed under the final rule. The total additional licensing cost to OTIs to comply with the final rule—specifically, the additional licensing cost to NVOCCs in the United States and to OFFS also operating as NVOCCs—is estimated to be $1.3 million.

Cost of Increasing the Financial Responsibility Requirement

The final rule raises the financial responsibility requirement as follows. The requirement for OFFs operating solely as OFFs in the U.S. export trade will increase from $30,000 to $50,000, with $10,000 in additional coverage for each unincorporated branch office. NVOCCs in the United States will be required to increase their financial responsibility from $50,000 to $75,000 with $10,000 in additional coverage for each unincorporated branch office. Foreign-based NVOCCs will be required to increase their financial responsibility from $50,000 to $150,000. Entities that operate as both OFFs and NVOCCs are presently required to have two separate instruments of financial responsibility, $30,000 covering their OFF activity and $50,000 covering their NVOCC activity. After considering comments objecting to the proposal to allow these entities to establish a single instrument of financial responsibility to cover both operations in the amount of $100,000, the Commission will continue the existing requirements that entities secure separate financial responsibility for each aspect of their operations. Entities operating as both OFFs and NVOCCs will also be required to acquire $10,000 in additional coverage for each unincorporated branch office.

The final rule also broadens the option for group bonds to include OFFs as well as NVOCCs, while raising the aggregate group requirement from $1 million to $3 million. Thus, the amount required will be the lesser of the amount required for each individual entity or $3 million aggregate. There are currently three group bonds on file with the Commission with a total of 166 NVOCC members. By posting a group bond, it is believed that participants save on premium payments by receiving a group coverage rate. However, it is difficult to project how many OFFs would opt for a group bond as a result of the final rule. Therefore, it is not feasible to forecast the potential cost savings to the industry of modifying the group bond provision in the final rule. Instead, the Commission will assume that all OTIs will post bonds at the higher individual premium rate.

For individual financial responsibility coverage, the Commission estimates that the premium ranges from $800 to $1,200 per year for $50,000 in coverage. The Commission employed an average premium cost of $1,000 per year for $50,000 in financial responsibility coverage to calculate the cost to OTIs of the proposed increases in coverage. In addition, the proportion of OFFs to branch offices was applied to estimate the number of NVOCC unincorporated branch offices.

The Commission estimates that the average cost to all OTIs of the additional financial responsibility requirements is as follows: OFFs operating solely as OFFs in the U.S. export trade will pay $897,000 ($578 per entity) more per year; OFFs also operating as NVOCCs will pay $554,000 ($1,078 per entity) more per year; NVOCCs in the United States will pay $967,000 ($678 per entity) more per year; and foreign-based NVOCCs will pay $1,252,000 ($2,000 per entity) more per year. The total first year cost of increased financial responsibility requirements for all entities under the final rule will be $3.7 million.

In some cases, underwriters may require individual OTIs to provide collateral in order to secure financial responsibility. Collateral accounts typically accrue interest at a risk-free rate until they are claimed or remitted in full to an OTI. However, when considering the industry as a whole, funds that are set aside as collateral could be otherwise invested in higher earning assets, such as in an OTI's business operations, thereby effectively assessing a cost to OTIs. Calculating the opportunity cost of increased collateral requires specific data on individual OTI's financial and operating riskiness. However, the Commission does not have that information available.

In lieu of such information, and in order to ensure that no substantial economic impact is overlooked, the Commission solicited comments in the proposed rule concerning the effects of the opportunity cost of increased collateral and premium requirements on OTIs. None of the commenters specifically addressed the issue of opportunity cost of increased collateral requirements. Since commenters did not view this issue as meriting specific comment, the Commission has concluded that the opportunity cost issue is not an issue in this proceeding.

Summary of Costs

In the first year of its implementation, the additional burden of the final rule is expected to average $1,600 for each NVOCC in the United States, $2,021 for each foreign-based NVOCC, $1,502 for each OFF also operating as an NVOCC, and $599 for each OFF operating solely as an OFF in the U.S. export trade. The total additional first year cost as a result of the final rule is estimated to be $5.3 million.

(5) A Description of the Steps the Agency Has Taken to Minimize the Significant Economic Impacts on Small Entities Consistent With the Stated Objectives of Applicable Statutes, Including a Statement of the Factual, Policy and Legal Reasons for Selecting the Alternative Adopted in the Final Rule, and the Reasons for Rejecting Each of the Other Significant Alternatives

Upon a review of the comments regarding the proposed rule, the Commission significantly modified the Rulemaking to alleviate the most significant concerns of the commenters while complying with the spirit of OSRA. The modifications to the proposed rule, the reasons for selecting alternative approaches, and the reasons for rejecting certain initial proposals, are each thoroughly described in the

SUPPLEMENTARY INFORMATION to the final rule.

This regulatory action is not a ''major'' rule under 5 U.S.C. 804(2).

The Commission has received OMB approval for this collection of information pursuant to the Paperwork Reduction Act of 1995, as amended. In accordance with that Act, agencies are required to display a currently valid control number. The valid control number for this collection of information is 3072–0012.

Relevant federal rules that may duplicate, overlap, or conflict with the new rule.

The Commission is not aware of any other federal rules that duplicate, overlap, or conflict with the new rule.

List of Subjects

46 CFR Part 510

Freight forwarders, Maritime carriers, Reporting and recordkeeping requirements, Surety bonds.

46 CFR Part 515

Common carriers, Exports, Freight, Freight forwarders, Maritime carriers, Reports and recordkeeping requirements, Surety bonds.

46 CFR Part 583

Freight, Maritime carriers, Reporting and recordkeeping requirements, Surety bonds.

Under the authority of Pub. L. 105–258 and as discussed in the preamble, the Federal Maritime Commission proposes to remove 46 CFR part 510 and 46 CFR part 583 and add part 515 to subchapter B, chapter IV, of 46 CFR as set forth below:

PART 510—[REMOVED]

1. Remove Part 510.

PART 583—[REMOVED]

2. Remove Part 583.

3. Revise the heading of subchapter B to read ''REGULATIONS AFFECTING OCEAN SHIPPING IN FOREIGN COMMERCE.''

4. Add Part 515 as follows:

PART 515—LICENSING, FINANCIAL RESPONSIBILITY REQUIREMENTS, AND GENERAL DUTIES FOR OCEAN TRANSPORTATION INTERMEDIARIES

Subpart A—General

Sec.
515.1 Scope.
515.2 Definitions.
515.3 License; when required.
515.4 License; when not required.
515.5 Forms and fees.

Subpart B—Eligibility and Procedure for Licensing

515.11 Basic requirements for licensing; eligibility.
515.12 Application for license.
515.13 Investigation of applicants.
515.14 Issuance and use of license.
515.15 Denial of license.
515.16 Revocation or suspension of license.
515.17 Application after revocation or denial.
515.18 Changes in organization.

Subpart C—Financial Responsibility Requirements; Claims Against Ocean Transportation Intermediaries

515.21 Financial responsibility requirements.
515.22 Proof of financial responsibility.
515.23 Claims against an ocean transportation intermediary.
515.24 Agent for service of process.
515.25 Filing of proof of financial responsibility.
515.26 Termination of financial responsibility.
515.27 Proof of compliance.
Appendix A to Subpart C—Ocean Transportation Intermediary (OTI) Bond Form [Form-48]
Appendix B to Subpart C—Ocean Transportation Intermediary (OTI) Insurance Form [Form-67]
Appendix C to Subpart C—Ocean Transportation Intermediary (OTI) Guaranty Form [Form-68]
Appendix D to Subpart C—Ocean Transportation Intermediary (OTI) Group Bond Form [FMC–69]

Subpart D—Duties and Responsibilities of Ocean Transportation Intermediaries; Reports to Commission

515.31 General duties.
515.32 Freight forwarder duties.
515.33 Records required to be kept.
515.34 Regulated Persons Index.

Subpart E—Freight Forwarding Fees and Compensation

515.41 Forwarder and principal; fees.
515.42 Forwarder and carrier; compensation.
515.91 OMB control number assigned pursuant to the Paperwork Reduction Act.

Authority: 5 U.S.C. 553; 31 U.S.C. 9701; 46 U.S.C. app. 1702, 1707, 1709, 1710, 1712, 1714, 1716, and 1718, 21 U.S.C. 862; Pub. L. 105–383, 112 Stat. 3411.

Subpart A—General

§ 515.1 Scope.

(a) This part sets forth regulations providing for the licensing as ocean transportation intermediaries of persons who wish to carry on the business of providing intermediary services, including the grounds and procedures for revocation and suspension of licenses. This part also prescribes the financial responsibility requirements and the duties and responsibilities of ocean transportation intermediaries, and regulations concerning practices of ocean transportation intermediaries with respect to common carriers.

(b) Information obtained under this part is used to determine the qualifications of ocean transportation intermediaries and their compliance with shipping statutes and regulations. Failure to follow the provisions of this part may result in denial, revocation or suspension of an ocean transportation intermediary license. Persons operating without the proper license may be subject to civil penalties not to exceed $5,500 for each such violation unless the violation is willfully and knowingly committed, in which case the amount of the civil penalty may not exceed $27,500 for each violation; for other violations of the provisions of this part, the civil penalties range from $5,500 to $27,500 for each violation (46 U.S.C. app. 1712). Each day of a continuing violation shall constitute a separate violation.

§ 515.2 Definitions.

The terms used in this part are defined as follows:

(a) *Act* means the Shipping Act of 1984, as amended by the Ocean Shipping Reform Act of 1998 and the Coast Guard Authorization Act of 1998.

(b) *Beneficial interest* includes a lien or interest in or right to use, enjoy, profit, benefit, or receive any advantage, either proprietary or financial, from the whole or any part of a shipment of cargo where such interest arises from the financing of the shipment or by operation of law, or by agreement, express or implied. The term ''beneficial interest'' shall not include any obligation in favor of an ocean transportation intermediary arising solely by reason of the advance of out-of-pocket expenses incurred in dispatching a shipment.

(c) *Branch office* means any office in the United States established by or maintained by or under the control of a licensee for the purpose of rendering intermediary services, which office is located at an address different from that of the licensee's designated home office. This term does not include a separately incorporated entity.

(d) *Brokerage* refers to payment by a common carrier to an ocean freight broker for the performance of services as specified in paragraph (n) of this section.

(e) *Commission* means the Federal Maritime Commission.

(f) *Common carrier* means any person holding itself out to the general public to provide transportation by water of passengers or cargo between the United

States and a foreign country for compensation that:

(1) Assumes responsibility for the transportation from the port or point of receipt to the port or point of destination, and

(2) Utilizes, for all or part of that transportation, a vessel operating on the high seas or the Great Lakes between a port in the United States and a port in a foreign country, except that the term does not include a common carrier engaged in ocean transportation by ferry boat, ocean tramp, chemical parcel tanker, or by a vessel when primarily engaged in the carriage of perishable agricultural commodities.

(i) if the common carrier and the owner of those commodities are wholly-owned, directly or indirectly, by a person primarily engaged in the marketing and distribution of those commodities, and

(ii) only with respect to those commodities.

(g) *Compensation* means payment by a common carrier to a freight forwarder for the performance of services as specified in § 515.42(c).

(h) *Freight forwarding fee* means charges billed by a freight forwarder to a shipper, consignee, seller, purchaser, or any agent thereof, for the performance of freight forwarding services.

(i) *Freight forwarding services* refers to the dispatching of shipments on behalf of others, in order to facilitate shipment by a common carrier, which may include, but are not limited to, the following:

(1) Ordering cargo to port;

(2) Preparing and/or processing export declarations;

(3) Booking, arranging for or confirming cargo space;

(4) Preparing or processing delivery orders or dock receipts;

(5) Preparing and/or processing ocean bills of lading;

(6) Preparing or processing consular documents or arranging for their certification;

(7) Arranging for warehouse storage;

(8) Arranging for cargo insurance;

(9) Clearing shipments in accordance with United States Government export regulations;

(10) Preparing and/or sending advance notifications of shipments or other documents to banks, shippers, or consignees, as required;

(11) Handling freight or other monies advanced by shippers, or remitting or advancing freight or other monies or credit in connection with the dispatching of shipments;

(12) Coordinating the movement of shipments from origin to vessel; and

(13) Giving expert advice to exporters concerning letters of credit, other documents, licenses or inspections, or on problems germane to the cargoes' dispatch.

(j) *From the United States* means oceanborne export commerce from the United States, its territories, or possessions, to foreign countries.

(k) *Licensee* is any person licensed by the Federal Maritime Commission as an ocean transportation intermediary.

(l) *Non-vessel-operating common carrier services* refers to the provision of transportation by water of cargo between the United States and a foreign country for compensation without operating the vessels by which the transportation is provided, and may include, but are not limited to, the following:

(1) Purchasing transportation services from a VOCC and offering such services for resale to other persons;

(2) Payment of port-to-port or multimodal transportation charges;

(3) Entering into affreightment agreements with underlying shippers;

(4) Issuing bills of lading or equivalent documents;

(5) Arranging for inland transportation and paying for inland freight charges on through transportation movements;

(6) Paying lawful compensation to ocean freight forwarders;

(7) Leasing containers; or

(8) Entering into arrangements with origin or destination agents.

(m) *Ocean common carrier* means a vessel-operating common carrier (''VOCC'').

(n) *Ocean freight broker* is an entity which is engaged by a carrier to secure cargo for such carrier and/or to sell or offer for sale ocean transportation services and which holds itself out to the public as one who negotiates between shipper or consignee and carrier for the purchase, sale, conditions and terms of transportation.

(o) *Ocean transportation intermediary* means an ocean freight forwarder or a non-vessel-operating common carrier. For the purposes of this part, the term

(1) *Ocean freight forwarder* means a person that—

(i) in the United States, dispatches shipments from the United States via a common carrier and books or otherwise arranges space for those shipments on behalf of shippers; and

(ii) processes the documentation or performs related activities incident to those shipments; and

(2) *Non-vessel-operating common carrier (''NVOCC'')* means a common carrier that does not operate the vessels by which the ocean transportation is provided, and is a shipper in its relationship with an ocean common carrier.

(p) *Person* includes individuals, corporations, partnerships and associations existing under or authorized by the laws of the United States or of a foreign country.

(q) *Principal*, except as used in Surety Bond Form FMC–48, and Group Bond Form FMC–69, refers to the shipper, consignee, seller, or purchaser of property, and to anyone acting on behalf of such shipper, consignee, seller, or purchaser of property, who employs the services of a licensed freight forwarder to facilitate the ocean transportation of such property.

(r) *Reduced forwarding fees* means charges to a principal for forwarding services that are below the licensed freight forwarder's usual charges for such services.

(s) *Shipment* means all of the cargo carried under the terms of a single bill of lading.

(t) *Shipper* means:

(1) A cargo owner;

(2) The person for whose account the ocean transportation is provided;

(3) The person to whom delivery is to be made;

(4) A shippers' association; or

(5) a non-vessel-operating common carrier that accepts responsibility for payment of all charges applicable under the tariff or service contract.

(u) *Small shipment* refers to a single shipment sent by one consignor to one consignee on one bill of lading which does not exceed the underlying common carrier's minimum charge rule.

(v) *Special contract* is a contract for freight forwarding services which provides for a periodic lump sum fee.

(w) *Transportation-related activities* which are covered by the financial responsibility obtained pursuant to this part include, to the extent involved in the foreign commerce of the United States, any activity performed by an ocean transportation intermediary that is necessary or customary in the provision of transportation services to a customer, but are not limited to the following:

(1) For an ocean transportation intermediary operating as a Freight forwarder, the freight forwarding services enumerated in § 515.2(i), and

(2) For an ocean transportation intermediary operating as a non-vessel-operating common carrier, the non-vessel-operating common carriers services enumerated in § 515.2(l).

(x) *United States* includes the several States, the District of Columbia, the Commonwealth of Puerto Rico, the Commonwealth of the Northern

Marianas, and all other United States territories and possessions.

§ 515.3 License; when required.

Except as otherwise provided in this part, no person in the United States may act as an ocean transportation intermediary unless that person holds a valid license issued by the Commission. A separate license is required for each branch office that is separately incorporated. For purposes of this part, a person is considered to be ''in the United States'' if such person is resident in, or incorporated or established under, the laws of the United States. Only persons licensed under this part may furnish or contract to furnish ocean transportation intermediary services in the United States on behalf of an unlicensed ocean transportation intermediary.

§ 515.4 License; when not required.

A license is not required in the following circumstances:

(a) *Shipper.* Any person whose primary business is the sale of merchandise may, without a license, dispatch and perform freight forwarding services on behalf of its own shipments, or on behalf of shipments or consolidated shipments of a parent, subsidiary, affiliate, or associated company. Such person shall not receive compensation from the common carrier for any services rendered in connection with such shipments.

(b) *Employee or branch office of licensed ocean transportation intermediary.* (1) An individual employee or unincorporated branch office of a licensed ocean transportation intermediary is not required to be licensed in order to act solely for such licensee, provided that such branch offices:

(i) Have been reported to the Commission in writing; and

(ii) Are covered by increased financial responsibility in accordance with § 515.21(a)(4).

(2) Each licensed ocean transportation intermediary will be held strictly responsible for the acts or omissions of any of its employees or agents rendered in connection with the conduct of its business.

(c) *Common carrier.* A common carrier, or agent thereof, may perform ocean freight forwarding services without a license only with respect to cargo carried under such carrier's own bill of lading. Charges for such forwarding services shall be assessed in conformance with the carrier's published tariffs.

(d) *Ocean freight brokers.* An ocean freight broker is not required to be licensed to perform those services specified in § 515.2(n).

(e) *Federal military and civilian household goods.* Any person which exclusively transports used household goods and personal effects for the account of the Department of Defense, or for the account of the federal civilian executive agencies shipping under the International Household Goods Program administered by the General Services Administration, or both, is not subject to the requirements of subpart B of this part, but may be subject to other requirements, such as alternative surety bonding, imposed by the Department of Defense, or the General Services Administration.

§ 515.5 Forms and Fees.

(a) *Forms.* License form FMC–18 Rev., and financial responsibility forms FMC–48, FMC–67, FMC–68, FMC–69 may be obtained from the Commission's website at www.fmc.gov, the Director, Bureau of Tariffs, Certification and Licensing, Federal Maritime Commission, Washington, D.C. 20573, or from any of the Commission's area representatives.

(b) *Fees.* All fees shall be payable by money order, certified check, cashier's check, or personal check to the ''Federal Maritime Commission.'' Should a personal check not be honored when presented for payment, the processing of an application under this section shall be suspended until the processing fee is paid. In any instance where an application has been processed in whole or in part, the fee will not be refunded. Such fees are:

(1) Application for license as required by § 515.12(a): $778;

(2) Application for status change or license transfer as required by §§ 515.18(a) and 515.18(b): $362; and

(3) Supplementary investigation as required by § 515.25(a): $224.

Subpart B—Eligibility and Procedure for Licensing

§ 515.11 Basic requirements for licensing; eligibility.

(a) *Necessary qualifications.* To be eligible for an ocean transportation intermediary license, the applicant must demonstrate to the Commission that:

(1) It possesses the necessary experience, that is, its qualifying individual has a minimum of three (3) years experience in ocean transportation intermediary activities in the United States, and the necessary character to render ocean transportation intermediary services. A foreign NVOCC seeking to be licensed under this part must demonstrate that its qualifying individual has a minimum 3 years' experience in ocean transportation intermediary activities, and the necessary character to render ocean transportation intermediary services; and

(2) It has obtained and filed with the Commission a valid bond, proof of insurance, or other surety in conformance with § 515.21.

(3) An NVOCC with a tariff and proof of financial responsibility in effect as of April 30, 1999, may continue to operate as an NVOCC without the requisite three years' experience and will be provisionally licensed while the Commission reviews its application. Such person designated as the qualifying individual for a provisionally licensed NVOCC may not act as a qualifying individual for another ocean transportation intermediary until it has obtained the necessary three years' experience in ocean transportation intermediary services.

(b) *Qualifying individual.* The following individuals must qualify the applicant for a license:

(1) *Sole proprietorship.* The applicant sole proprietor.

(2) *Partnership.* At least one of the active managing partners, but all partners must execute the application.

(3) *Corporation.* At least one of the active corporate officers.

(c) *Affiliates of intermediaries.* An independently qualified applicant may be granted a separate license to carry on the business of providing ocean transportation intermediary services even though it is associated with, under common control with, or otherwise related to another ocean transportation intermediary through stock ownership or common directors or officers, if such applicant submits: a separate application and fee, and a valid instrument of financial responsibility in the form and amount prescribed under § 515.21. The qualifying individual of one active licensee shall not also be designated contemporaneously as the qualifying individual of an applicant for another ocean transportation intermediary license, except for a separately incorporated branch office.

(d) *Common carrier.* A common carrier or agent thereof which meets the requirements of this part may be licensed to dispatch shipments moving on other than such carrier's own bills of lading subject to the provisions of § 515.42(g).

§ 515.12 Application for license.

(a) *Application and forms.* Any person who wishes to obtain a license to operate as an ocean transportation intermediary shall submit, in duplicate, to the Director of the Commission's

Bureau of Tariffs, Certification and Licensing, a completed application Form FMC–18 Rev. (''Application for a License as an Ocean Transportation Intermediary'') accompanied by the fee required under § 515.5(b). All applications will be assigned an application number, and each applicant will be notified of the number assigned to its application. Notice of filing of such application shall be published in the **Federal Register** and shall state the name and address of the applicant and the name and address of the qualifying individual. If the applicant is a corporation or partnership, the names of the officers or partners thereof shall be published.

(b) *Rejection.* Any application which appears upon its face to be incomplete or to indicate that the applicant fails to meet the licensing requirements of the Act, or the Commission's regulations, shall be returned by certified U.S. mail or other method reasonably calculated to provide actual notice to the applicant without further processing, together with an explanation of the reason(s) for rejection, and the application fee shall be refunded in full. Persons who have had their applications returned may reapply for a license at any time thereafter by submitting a new application, together with the full application fee.

(c) *Investigation.* Each applicant shall be investigated in accordance with § 515.13.

(d) *Changes in fact.* Each applicant and each licensee shall submit to the Commission, in duplicate, an amended Form FMC–18 Rev. advising of any changes in the facts submitted in the original application, within thirty (30) days after such change(s) occur. In the case of an application for a license, any unreported change may delay the processing and investigation of the application and may result in rejection or denial of the application. No fee is required when reporting changes to an application for initial license under this section.

§ 515.13 Investigation of applicants.

The Commission shall conduct an investigation of the applicant's qualifications for a license. Such investigations may address:

(a) The accuracy of the information submitted in the application;

(b) The integrity and financial responsibility of the applicant;

(c) The character of the applicant and its qualifying individual; and

(d) The length and nature of the qualifying individual's experience in handling ocean transportation intermediary duties.

§ 515.14 Issuance and use of license.

(a) *Qualification necessary for issuance.* The Commission will issue a license if it determines, as a result of its investigation, that the applicant possesses the necessary experience and character to render ocean transportation intermediary services and has filed the required bond, insurance or other surety.

(b) *To whom issued.* The Commission will issue a license only in the name of the applicant, whether the applicant is a sole proprietorship, a partnership, or a corporation. A license issued to a sole proprietor doing business under a trade name shall be in the name of the sole proprietor, indicating the trade name under which the licensee will be conducting business. Only one license shall be issued to any applicant regardless of the number of names under which such applicant may be doing business, and except as otherwise provided in this part, such license is limited exclusively to use by the named licensee and shall not be transferred without prior Commission approval to another person.

§ 515.15 Denial of license.

If the Commission determines, as a result of its investigation, that the applicant:

(a) Does not possess the necessary experience or character to render intermediary services;

(b) Has failed to respond to any lawful inquiry of the Commission; or

(c) Has made any materially false or misleading statement to the Commission in connection with its application; then, a letter of intent to deny the application shall be sent to the applicant by certified U.S. mail or other method reasonably calculated to provide actual notice, stating the reason(s) why the Commission intends to deny the application. If the applicant submits a written request for hearing on the proposed denial within twenty (20) days after receipt of notification, such hearing shall be granted by the Commission pursuant to its Rules of Practice and Procedure contained in part 502 of this chapter. Otherwise, denial of the application will become effective and the applicant shall be so notified by certified U.S. mail or other method reasonably calculated to provide actual notice.

§ 515.16 Revocation or suspension of license.

(a) *Grounds for revocation.* Except for the automatic revocation for termination of proof of financial responsibility under § 515.26, or as provided in § 515.25(b), a license may be revoked or suspended after notice and an opportunity for a hearing for any of the following reasons:

(1) Violation of any provision of the Act, or any other statute or Commission order or regulation related to carrying on the business of an ocean transportation intermediary;

(2) Failure to respond to any lawful order or inquiry by the Commission;

(3) Making a materially false or misleading statement to the Commission in connection with an application for a license or an amendment to an existing license;

(4) Where the Commission determines that the licensee is not qualified to render intermediary services; or

(5) Failure to honor the licensee's financial obligations to the Commission.

(b) *Notice of revocation.* The Commission shall publish in the **Federal Register** a notice of each revocation.

§ 515.17 Application after revocation or denial.

Whenever a license has been revoked or an application has been denied because the Commission has found the licensee or applicant to be not qualified to render ocean transportation intermediary services, any further application within 3 years of the Commission's notice of revocation or denial, made by such former licensee or applicant or by another applicant employing the same qualifying individual or controlled by persons on whose conduct the Commission based its determination for revocation or denial, shall be reviewed directly by the Commission.

§ 515.18 Changes in organization.

(a) The following changes in an existing licensee's organization require prior approval of the Commission, and application for such status change or license transfer shall be made on Form FMC–18 Rev., filed in duplicate with the Commission's Bureau of Tariffs, Certification and Licensing, and accompanied by the fee required under § 515.5(b)(2):

(1) Transfer of a corporate license to another person;

(2) Change in ownership of a sole proprietorship;

(3) Addition of one or more partners to a licensed partnership;

(4) Any change in the business structure of a licensee from or to a sole proprietorship, partnership, or corporation, whether or not such change involves a change in ownership;

(5) Any change in a licensee's name; or

(6) Change in the identity or status of the designated qualifying individual,

except as described in paragraphs (b) and (c) of this section.

(b) *Operation after death of sole proprietor.* In the event the owner of a licensed sole proprietorship dies, the licensee's executor, administrator, heir(s), or assign(s) may continue operation of such proprietorship solely with respect to shipments for which the deceased sole proprietor had undertaken to act as an ocean transportation intermediary pursuant to the existing license, if the death is reported within 30 days to the Commission and to all principals and shippers for whom services on such shipments are to be rendered. The acceptance or solicitation of any other shipments is expressly prohibited until a new license has been issued. Applications for a new license by the executor, administrator, heir(s), or assign(s) shall be made on Form FMC–18 Rev., and shall be accompanied by the transfer fee required under § 515.5(b)(2).

(c) *Operation after retirement, resignation, or death of qualifying individual.* When a partnership or corporation has been licensed on the basis of the qualifications of one or more of the partners or officers thereof, and such qualifying individual(s) no longer serve in a full-time, active capacity with the firm, the licensee shall report such change to the Commission within 30 days. Within the same 30-day period, the licensee shall furnish to the Commission the name(s) and detailed intermediary experience of any other active managing partner(s) or officer(s) who may qualify the licensee. Such qualifying individual(s) must meet the applicable requirements set forth in § 515.11(a). The licensee may continue to operate as an ocean transportation intermediary while the Commission investigates the qualifications of the newly designated partner or officer.

(d) *Incorporation of branch office.* In the event a licensee's validly operating branch office becomes incorporated as a separate entity, the licensee may continue to operate such office pending receipt of a separate license, provided that:

(1) The separately incorporated entity applies to the Commission for its own license within ten (10) days after incorporation, and

(2) While the application is pending, the continued operation of the office is carried on as a *bona fide* branch office of the licensee, under its full control and responsibility, and not as an operation of the separately incorporated entity.

(e) Acquisition of one or more additional licensees. In the event a licensee acquires one or more additional licensees, for the purpose of merger, consolidation, or control, the acquiring licensee shall advise the Commission of such change within 30 days after such change occurs by submitting in duplicate, an amended Form FMC–18, Rev. No application fee is required when reporting this change.

Subpart C—Financial Responsibility Requirements; Claims Against Ocean Transportation Intermediaries

§ 515.21 Financial responsibility requirements.

(a) *Form and amount.* Except as otherwise provided in this part, no person may operate as an ocean transportation intermediary unless that person furnishes a bond, proof of insurance, or other surety in a form and amount determined by the Commission to insure financial responsibility. The bond, insurance or other surety covers the transportation-related activities of an ocean transportation intermediary only when acting as an ocean transportation intermediary.

(1) Any person operating in the United States as an ocean freight forwarder as defined by § 515.2(o)(1) shall furnish evidence of financial responsibility in the amount of $50,000.

(2) Any person operating in the United States as an NVOCC as defined by § 515.2(o)(2) shall furnish evidence of financial responsibility in the amount of $75,000.

(3) Any unlicensed foreign-based entity, not operating in the United States as defined in § 515.3, providing ocean transportation intermediary services for transportation to or from the United States, shall furnish evidence of financial responsibility in the amount of $150,000. Such foreign entity will be held strictly responsible hereunder for the acts or omissions of its agent in the United States.

(4) The amount of the financial responsibility required to be furnished by any entity pursuant to paragraphs (a)(1) or (a)(2) of this section shall be increased by $10,000 for each of the applicant's unincorporated branch offices.

(b) *Group financial responsibility.* Where a group or association of ocean transportation intermediaries accepts liability for an ocean transportation intermediary's financial responsibility for such ocean transportation intermediary's transportation-related activities under the Act, the group or association of ocean transportation intermediaries must file either a group supplemental coverage bond form, insurance form or guaranty form, clearly identifying each ocean transportation intermediary covered, before a covered ocean transportation intermediary may provide ocean transportation intermediary services. In such cases a group or association must establish financial responsibility in an amount equal to the lesser of the amount required by paragraph (a) of this section for each member or $3,000,000 in aggregate.

(c) *Common trade name.* Where more than one person operates under a common trade name, separate proof of financial responsibility is required covering each corporation or person separately providing ocean transportation intermediary services.

(d) *Federal military and civilian household goods.* Any person which exclusively transports used household goods and personal effects for the account of the Department of Defense, or for the account of the federal civilian executive agencies shipping under the International Household Goods Program administered by the General Services Administration, or both, is not subject to the requirements of subpart C of this part, but may be subject to other requirements, such as alternative surety bonding, imposed by the Department of Defense, or the General Services Administration.

§ 515.22 Proof of financial responsibility.

Prior to the date it commences furnishing ocean transportation intermediary services, every ocean transportation intermediary shall establish its financial responsibility for the purpose of this part by one of the following methods:

(a) Surety bond, by filing with the Commission a valid bond on Form FMC–48. Bonds must be issued by a surety company found acceptable by the Secretary of the Treasury;

(b) Insurance, by filing with the Commission evidence of insurance on Form FMC–67. The insurance must provide coverage for damages, reparations or penalties arising from any transportation-related activities under the Act of the insured ocean transportation intermediary. This evidence of financial responsibility shall be accompanied by: in the case of a financial rating, the Insurer's financial rating on the rating organization's letterhead or designated form; in the case of insurance provided by Underwriters at Lloyd's, documentation verifying membership in Lloyd's; and in the case of insurance provided by surplus lines insurers, documentation verifying inclusion on a current ''white list'' issued by the Non-Admitted Insurers' Information Office of the

National Association of Insurance Commissioners. The Insurer must certify that it has sufficient and acceptable assets located in the United States to cover all damages arising from the transportation-related activities of the insured ocean transportation intermediary as specified under the Act. The insurance must be placed with:

(1) An Insurer having a financial rating of Class V or higher under the Financial Size Categories of A.M. Best & Company, or equivalent from an acceptable international rating organization;

(2) Underwriters at Lloyd's; or

(3) Surplus lines insurers named on a current ''white list'' issued by the Non-Admitted Insurers' Information Office of the National Association of Insurance Commissioners; or

(c) Guaranty, by filing with the Commission evidence of guaranty on Form FMC–68. The guaranty must provide coverage for damages, reparations or penalties arising from any transportation-related activities under the Act of the covered ocean transportation intermediary. This evidence of financial responsibility shall be accompanied by: in the case of a financial rating, the Guarantor's financial rating on the rating organization's letterhead or designated form; in the case of a guaranty provided by Underwriters at Lloyd's, documentation verifying membership in Lloyd's; and in the case of a guaranty provided by surplus lines insurers, documentation verifying inclusion on a current ''white list'' issued by the Non-Admitted Insurers' Information Office of the National Association of Insurance Commissioners. The Guarantor must certify that it has sufficient and acceptable assets located in the United States to cover all damages arising from the transportation-related activities of the covered ocean transportation intermediary as specified under the Act. The guaranty must be placed with:

(1) A Guarantor having a financial rating of Class V or higher under the Financial Size Categories of A.M. Best & Company, or equivalent from an acceptable international rating organization;

(2) Underwriters at Lloyd's; or

(3) Surplus lines insurers named on a current ''white list'' issued by the Non-Admitted Insurers' Information Office of the National Association of Insurance Commissioners; or

(d) Evidence of financial responsibility of the type provided for in paragraphs (a), (b) and (c) of this section established through and filed with the Commission by a group or association of ocean transportation intermediaries on behalf of its members, subject to the following conditions and procedures:

(1) Each group or association of ocean transportation intermediaries shall notify the Commission of its intention to participate in such a program and furnish documentation as will demonstrate its authenticity and authority to represent its members, such as articles of incorporation, bylaws, etc.;

(2) Each group or association of ocean transportation intermediaries shall provide the Commission with a list certified by its Chief Executive Officer containing the names of those ocean transportation intermediaries to which it will provide coverage; the manner and amount of existing coverage each covered ocean transportation intermediary has; an indication that the existing coverage provided each ocean transportation intermediary is provided by a surety bond issued by a surety company found acceptable to the Secretary of the Treasury, or by insurance or guaranty issued by a firm meeting the requirements of paragraphs (b) or (c) of this section with coverage limits specified above in § 515.21; and the name, address and facsimile number of each surety, insurer or guarantor providing coverage pursuant to this section. Each group or association of ocean transportation intermediaries or its financial responsibility provider shall notify the Commission within 30 days of any changes to its list;

(3) The group or association shall provide the Commission with a sample copy of each type of existing financial responsibility coverage used by member ocean transportation intermediaries;

(4) Each group or association of ocean transportation intermediaries shall be responsible for ensuring that each member's financial responsibility coverage allows for claims to be made in the United States against the Surety, Insurer or Guarantor for any judgment for damages against the ocean transportation intermediary arising from its transportation-related activities under the Act, or order for reparations issued pursuant to section 11 of the Act, or any penalty assessed against the ocean transportation intermediary pursuant to section 13 of the Act. Each group or association of ocean transportation intermediaries shall be responsible for requiring each member ocean transportation intermediary to provide it with valid proof of financial responsibility annually;

(5) Where the group or association of ocean transportation intermediaries determines to secure on behalf of its members other forms of financial responsibility, as specified by this section, for damages, reparations or penalties not covered by a member's individual financial responsibility coverage, such additional coverage must:

(i) Allow claims to be made in the United States directly against the group or association's Surety, Insurer or Guarantor for damages against each covered member ocean transportation intermediary arising from each covered member ocean transportation intermediary's transportation-related activities under the Act, or order for reparations issued pursuant to section 11 of the Act, or any penalty assessed against each covered member ocean transportation intermediary pursuant to section 13 of the Act; and

(ii) Be for an amount up to the amount determined in accordance with § 515.21(b), taking into account a member's individual financial responsibility coverage already in place. In the event of a claim against a group bond, the bond must be replenished up to the original amount of coverage within 30 days of payment of the claim; and

(iii) be in excess of a member's individual financial responsibility coverage already in place; and

(6) The coverage provided by the group or association of ocean transportation intermediaries on behalf of its members shall be provided by:

(i) in the case of a surety bond, a surety company found acceptable to the Secretary of the Treasury and issued by such a surety company on Form FMC–69; and

(ii) in the case of insurance and guaranty, a firm having a financial rating of Class V or higher under the Financial Size Categories of A.M. Best & Company or equivalent from an acceptable international rating organization, Underwriters at Lloyd's, or surplus line insurers named on a current ''white list'' issued by the Non-Admitted Insurers' Information Office of the National Association of Insurance Commissioners and issued by such firms on Form FMC–67 and Form FMC–68, respectively.

(e) All forms and documents for establishing financial responsibility of ocean transportation intermediaries prescribed in this section shall be submitted to the Director, Bureau of Tariffs, Certification and Licensing, Federal Maritime Commission, Washington, DC 20573. Such forms and documents must clearly identify the name; trade name, if any; and the address of each ocean transportation intermediary.

§ 515.23 Claims against an ocean transportation intermediary.

The Commission or another party may seek payment from the bond, insurance, or other surety that is obtained by an ocean transportation intermediary pursuant to this section.

(a) *Payment pursuant to Commission order.* If the Commission issues an order for reparation pursuant to sections 11 or 14 of the Act, or assesses a penalty pursuant to section 13 of the Act, a bond, insurance, or other surety shall be available to pay such order or penalty.

(b) *Payment pursuant to a claim.* (1) If a party does not file a complaint with the Commission pursuant to section 11 of the Act, but otherwise seeks to pursue a claim against an ocean transportation intermediary bond, insurance or other surety for damages arising from its transportation-related activities, it shall attempt to resolve its claim with the financial responsibility provider prior to seeking payment on any judgment for damages obtained. When a claimant seeks payment under this section, it simultaneously shall notify both the financial responsibility provider and the ocean transportation intermediary of the claim by certified mail, return receipt requested. The bond, insurance, or other surety may be available to pay such claim if:

(i) The ocean transportation intermediary consents to payment, subject to review by the financial responsibility provider; or

(ii) The ocean transportation intermediary fails to respond within forty-five (45) days from the date of the notice of the claim to address the validity of the claim, and the financial responsibility provider deems the claim valid.

(2) If the parties fail to reach an agreement in accordance with paragraph (b)(1) of this section within ninety (90) days of the date of the initial notification of the claim, the bond, insurance, or other surety shall be available to pay any judgment for damages obtained from an appropriate court. The financial responsibility provider shall pay such judgment for damages only to the extent they arise from the transportation-related activities of the ocean transportation intermediary ordinarily within 30 days, without requiring further evidence related to the validity of the claim; it may, however, inquire into the extent to which the judgment for damages arises from the ocean transportation intermediary's transportation-related activities.

(c) The Federal Maritime Commission shall not serve as depository or distributor to third parties of bond, guaranty, or insurance funds in the event of any claim, judgment, or order for reparation.

§ 515.24 Agent for service of process.

(a) Every ocean transportation intermediary not located in the United States and every group or association of ocean transportation intermediaries not located in the United States which provides financial coverage for the financial responsibility of a member ocean transportation intermediary shall designate and maintain a person in the United States as legal agent for the receipt of judicial and administrative process, including subpoenas.

(b) If the designated legal agent cannot be served because of death, disability, or unavailability, the Secretary, Federal Maritime Commission, will be deemed to be the legal agent for service of process. Any person serving the Secretary must also send to the ocean transportation intermediary, or group or association of ocean transportation intermediaries which provide financial coverage for the financial responsibilities of a member ocean transportation intermediary, by registered mail, return receipt requested, at its address published in its tariff, a copy of each document served upon the Secretary, and shall attest to that mailing at the time service is made upon the Secretary.

(c) Service of administrative process, other than subpoenas, may be effected upon the legal agent by mailing a copy of the document to be served by certified or registered mail, return receipt requested. Administrative subpoenas shall be served in accordance with § 502.134 of this chapter.

(d) Designations of resident agent under paragraphs (a) and (b) of this section and provisions relating to service of process under paragraph (c) of this section shall be published in the ocean transportation intermediary's tariff, when required, in accordance with part 520 of this chapter.

(e) Every ocean transportation intermediary using a group or association of ocean transportation intermediaries to cover its financial responsibility requirement under § 515.21(b) shall publish the name and address of the group or association's resident agent for receipt of judicial and administrative process, including subpoenas, in its tariff, when required, in accordance with part 520 of this chapter.

§ 515.25 Filing of proof of financial responsibility.

(a) *Filing of proof of financial responsibility.* Upon notification by the Commission by certified U.S. mail or other method reasonably calculated to provide actual notice that the applicant has been approved for licensing, the applicant shall file with the Director of the Commission's Bureau of Tariffs, Certification and Licensing, proof of financial responsibility in the form and amount prescribed in § 515.21. No tariff shall be published until a license is issued, if applicable, and proof of financial responsibility is provided. No license will be issued until the Commission is in receipt of valid proof of financial responsibility from the applicant. If more than six (6) months elapse between issuance of the notification of qualification and receipt of the proof of financial responsibility, the Commission may, at its discretion, undertake a supplementary investigation to determine the applicant's continued qualification, for which a fee is required under § 515.5(b)(3). Should the applicant not file the requisite proof of financial responsibility within two (2) years of notification, the Commission will consider the application to be invalid.

(b) *Branch offices.* New proof of financial responsibility, or a rider to the existing proof of financial responsibility, increasing the amount of the financial responsibility in accordance with § 515.21(a)(4), shall be filed with the Commission prior to the date the licensee commences operation of any branch office. Failure to adhere to this requirement may result in revocation of the license.

§ 515.26 Termination of financial responsibility.

No license shall remain in effect unless valid proof of financial responsibility is maintained on file with the Commission. Upon receipt of notice of termination of such financial responsibility, the Commission shall notify the concerned licensee by certified U.S. mail or other method reasonably calculated to provide actual notice, at its last known address, that the Commission shall, without hearing or other proceeding, revoke the license as of the termination date of the financial responsibility, unless the licensee shall have submitted valid replacement proof of financial responsibility before such termination date. Replacement financial responsibility must bear an effective date no later than the termination date of the expiring financial responsibility.

§ 515.27 Proof of compliance.

(a) No common carrier may transport cargo for the account of a shipper known by the carrier to be an NVOCC unless the carrier has determined that

the NVOCC has a tariff and financial responsibility as required by sections 8 and 19 of the Act.

(b) A common carrier can obtain proof of an NVOCC's compliance with the tariff and financial responsibility requirements by:

(1) Reviewing a copy of the tariff published by the NVOCC and in effect under part 520 of this chapter;

(2) Consulting the Commission to verify that the NVOCC has filed evidence of its financial responsibility; or

(3) Any other appropriate procedure, provided that such procedure is set forth in the carrier's tariff.

(c) A common carrier that has employed the procedure prescribed in either paragraphs (b)(1) or (b)(2) of this section shall be deemed to have met its obligations under section 10(b)(11) of the Act, unless the common carrier knew that such NVOCC was not in compliance with the tariff and financial responsibility requirements.

(d) The Commission will publish at its website, www.fmc.gov, a list of the locations of all carrier and conference tariffs, and a list of ocean transportation intermediaries who have furnished the Commission with evidence of financial responsibility, current as of the last date on which the list is updated. The Commission will update this list on a periodic basis.

Appendix A to Subpart C—Ocean Transportation Intermediary (OTI) Bond Form [Form 48]

Form FMC–48

Federal Maritime Commission

Ocean Transportation Intermediary (OTI) Bond (Section 19, Shipping Act of 1984, as amended by the Ocean Shipping Reform Act of 1998 and the Coast Guard Authorization Act of 1998) _____[indicate whether *NVOCC* or *Freight Forwarder*], as Principal (hereinafter ''Principal''), and _____, as Surety (hereinafter ''Surety'') are held and firmly bound unto the United States of America in the sum of $_____ for the payment of which sum we bind ourselves, our heirs, executors, administrators, successors and assigns, jointly and severally.

Whereas, Principal operates as an OTI in the waterborne foreign commerce of the United States in accordance with the Shipping Act of 1984, as amended by the Ocean Shipping Reform Act of 1998 and the Coast Guard Authorization Act of 1998 (''1984 Act''), 46 U.S.C. app 1702, and, if necessary, has a valid tariff published pursuant to 46 CFR part 515 and 520, and pursuant to section 19 of the 1984 Act, files this bond with the Commission;

Now, Therefore, The condition of this obligation is that the penalty amount of this bond shall be available to pay any judgment or any settlement made pursuant to a claim under 46 CFR § 515.23(b) for damages against the Principal arising from the Principal's transportation-related activities or order for reparations issued pursuant to section 11 of the 1984 Act, 46 U.S.C. app. 1710, or any penalty assessed against the Principal pursuant to section 13 of the 1984 Act, 46 U.S.C. app. 1712.

This bond shall inure to the benefit of any and all persons who have obtained a judgment or a settlement made pursuant to a claim under 46 CFR § 515.23(b) for damages against the Principal arising from its transportation-related activities or order of reparation issued pursuant to section 11 of the 1984 Act, and to the benefit of the Federal Maritime Commission for any penalty assessed against the Principal pursuant to section 13 of the 1984 Act. However, the bond shall not apply to shipments of used household goods and personal effects for the account of the Department of Defense or the account of federal civilian executive agencies shipping under the International Household Goods Program administered by the General Services Administration.

The liability of the Surety shall not be discharged by any payment or succession of payments hereunder, unless and until such payment or payments shall aggregate the penalty of this bond, and in no event shall the Surety's total obligation hereunder exceed said penalty regardless of the number of claims or claimants.

This bond is effective the _____ day of _____, _____ and shall continue in effect until discharged or terminated as herein provided. The Principal or the Surety may at any time terminate this bond by written notice to the Federal Maritime Commission at its office in Washington, DC. Such termination shall become effective thirty (30) days after receipt of said notice by the Commission. The Surety shall not be liable for any transportation-related activities of the Principal after the expiration of the 30-day period but such termination shall not affect the liability of the Principal and Surety for any event occurring prior to the date when said termination becomes effective.

The Surety consents to be sued directly in respect of any *bona fide* claim owed by Principal for damages, reparations or penalties arising from the transportation-related activities under the 1984 Act of Principal in the event that such legal liability has not been discharged by the Principal or Surety after a claimant has obtained a final judgment (after appeal, if any) against the Principal from a United States Federal or State Court of competent jurisdiction and has complied with the procedures for collecting on such a judgment pursuant to 46 CFR § 515.23(b), the Federal Maritime Commission, or where all parties and claimants otherwise mutually consent, from a foreign court, or where such claimant has become entitled to payment of a specified sum by virtue of a compromise settlement agreement made with the Principal and/or Surety pursuant to 46 CFR § 515.23(b), whereby, upon payment of the agreed sum, the Surety is to be fully, irrevocably and unconditionally discharged from all further liability to such claimant; provided, however, that Surety's total obligation hereunder shall not exceed the amount set forth in 46 CFR § 515.21, as applicable.

The underwriting Surety will promptly notify the Director, Bureau of Tariffs, Certification and Licensing, Federal Maritime Commission, Washington, DC 20573, of any claim(s) against this bond.

Signed and sealed this _____ day of _____, _____.

(Please type name of signer under each signature.)

_____
Individual Principal or Partner

_____
Business Address

_____
Individual Principal or Partner

_____
Business Address

_____
Individual Principal or Partner

_____
Business Address
Trade Name, If Any

_____
Corporate Principal

_____
State of Incorporation
Trade Name, If Any

_____
Business Address

_____
By

_____
Title
(Affix Corporate Seal)

_____
Corporate Surety

_____
Business Address

_____
By

_____
Title
(Affix Corporate Seal)

Appendix B to Subpart C—Ocean Transportation Intermediary (OTI) Insurance Form [Form 67]

Form FMC–67

Federal Maritime Commission

Ocean Transportation Intermediary (OTI) Insurance

Form Furnished as Evidence of Financial Responsibility

Under 46 U.S.C. app. 1718

This is to certify, that the *(Name of Insurance Company)*, (hereinafter ''Insurer'') of *(Home Office Address of Company)* has issued to *(OTI or Group or Association of OTIs [indicate whether NVOCC(s) or Freight Forwarder(s)])* (hereinafter ''Insured'') of *(Address of OTI or Group or Association of OTIs)* a policy or policies of insurance for purposes of complying with the provisions of 46 U.S.C. app. 1718 and the rules and regulations, as amended, of the Federal Maritime Commission, which provide

compensation for damages, reparations or penalties arising from the transportation-related activities of Insured, and made pursuant to the Shipping Act of 1984, as amended by the Ocean Shipping Reform Act of 1998 and the Coast Guard Authorization Act of 1998 (''1984 Act'').

Whereas, the Insured is or may become an OTI subject to the 1984 Act, 46 U.S.C. app. 1701 *et seq.*, and the rules and regulations of the Federal Maritime Commission, or is or may become a group or association of OTIs, and desires to establish financial responsibility in accordance with section 19 of the 1984 Act, files with the Commission this Insurance Form as evidence of its financial responsibility and evidence of a financial rating for the Insurer of Class V or higher under the Financial Size Categories of A.M. Best & Company or equivalent from an acceptable international rating organization on such organization's letterhead or designated form, or, in the case of insurance provided by Underwriters at Lloyd's, documentation verifying membership in Lloyd's, or, in the case of surplus lines insurers, documentation verifying inclusion on a current ''white list'' issued by the Non-Admitted Insurers' Information Office of the National Association of Insurance Commissioners.

Whereas, the Insurance is written to assure compliance by the Insured with section 19 of the 1984 Act, 46 U.S.C. app. 1718, and the rules and regulations of the Federal Maritime Commission relating to evidence of financial responsibility for OTIs, this Insurance shall be available to pay any judgment obtained or any settlement made pursuant to a claim under 46 CFR § 515.23(b) for damages against the Insured arising from the Insured's transportation-related activities under the 1984 Act, or order for reparations issued pursuant to section 11 of the 1984 Act, 46 U.S.C. app. 1710, or any penalty assessed against the Insured pursuant to section 13 of the 1984 Act, 46 U.S.C. app. 1712; provided, however, that Insurer's obligation for a group or association of OTIs shall extend only to such damages, reparations or penalties described herein as are not covered by another insurance policy, guaranty or surety bond held by the OTI(s) against which a claim or final judgment has been brought and that Insurer's total obligation hereunder shall not exceed the amount per OTI set forth in 46 CFR § 515.21 or the amount per group or association of OTIs set forth in 46 CFR § 515.21 in aggregate.

Whereas, the Insurer certifies that it has sufficient and acceptable assets located in the United States to cover all liabilities of Insured herein described, this Insurance shall inure to the benefit of any and all persons who have a *bona fide* claim against the Insured pursuant to 46 CFR § 515.23(b) arising from its transportation-related activities under the 1984 Act, or order of reparation issued pursuant to section 11 of the 1984 Act, and to the benefit of the Federal Maritime Commission for any penalty assessed against the Insured pursuant to section 13 of the 1984 Act.

The Insurer consents to be sued directly in respect of any *bona fide* claim owed by Insured for damages, reparations or penalties arising from the transportation-related activities under the 1984 Act, of Insured in the event that such legal liability has not been discharged by the Insured or Insurer after a claimant has obtained a final judgment (after appeal, if any) against the Insured from a United States Federal or State Court of competent jurisdiction and has complied with the procedures for collecting on such a judgment pursuant to 46 CFR § 515.23(b), the Federal Maritime Commission, or where all parties and claimants otherwise mutually consent, from a foreign court, or where such claimant has become entitled to payment of a specified sum by virtue of a compromise settlement agreement made with the Insured and/or Insurer pursuant to 46 CFR § 515.23(b), whereby, upon payment of the agreed sum, the Insurer is to be fully, irrevocably and unconditionally discharged from all further liability to such claimant; provided, however, that Insurer's total obligation hereunder shall not exceed the amount per OTI set forth in 46 CFR § 515.21 or the amount per group or association of OTIs set forth in 46 CFR § 515.21.

The liability of the Insurer shall not be discharged by any payment or succession of payments hereunder, unless and until such payment or payments shall aggregate the penalty of the Insurance in the amount per member OTI set forth in 46 CFR § 515.21 or the amount per group or association of OTIs set forth in 46 CFR § 515.21, regardless of the financial responsibility or lack thereof, or the solvency or bankruptcy, of Insured.

The insurance evidenced by this undertaking shall be applicable only in relation to incidents occurring on or after the effective date and before the date termination of this undertaking becomes effective. The effective date of this undertaking shall be _____ day of _____, _____, and shall continue in effect until discharged or terminated as herein provided. The Insured or the Insurer may at any time terminate the Insurance by filing a notice in writing with the Federal Maritime Commission at its office in Washington, D.C. Such termination shall become effective thirty (30) days after receipt of said notice by the Commission. The Insurer shall not be liable for any transportation-related activities under the 1984 Act of the Insured after the expiration of the 30-day period but such termination shall not affect the liability of the Insured and Insurer for such activities occurring prior to the date when said termination becomes effective.

Insurer or Insured shall immediately give notice to the Federal Maritime Commission of all lawsuits filed, judgments rendered, and payments made under the insurance policy.

(Name of Agent) _____ domiciled in the United States, with offices located in the United States, at _____ is hereby designated as the Insurer's agent for service of process for the purposes of enforcing the Insurance certified to herein.

If more than one insurer joins in executing this document, that action constitutes joint and several liability on the part of the insurers.

The Insurer will promptly notify the Director, Bureau of Tariffs, Certification and Licensing, Federal Maritime Commission, Washington, D.C. 20573, of any claim(s) against the Insurance.

Signed and sealed this _____ day of _____, _____.

_____

Signature of Official signing on behalf of Insurer

_____

Type Name and Title of signer

This Insurance Form has been filed with the Federal Maritime Commission.

Appendix C to Subpart C—Ocean Transportation Intermediary (OTI) Guaranty Form [Form 68]

Form FMC–68

Federal Maritime Commission

Guaranty in Respect of Ocean Transportation Intermediary (OTI) Liability for Damages, Reparations or Penalties Arising from Transportation-Related Activities Under the Shipping Act of 1984, as amended by the Ocean Shipping Reform Act of 1998 and the Coast Guard Authorization Act of 1998

1. *Whereas*

_____

(Name of Applicant [indicate whether *NVOCC* or *Freight Forwarder*]) (hereinafter ''Applicant'') is or may become an Ocean Transportation Intermediary (''OTI'') subject to the Shipping Act of 1984, as amended by the Ocean Shipping Reform Act of 1998 and the Coast Guard Authorization Act of 1998 (''1984 Act''), 46 U.S.C. app. 1701 *et seq.*, and the rules and regulations of the Federal Maritime Commission (''FMC''), or is or may become a group or association of OTIs, and desires to establish its financial responsibility in accordance with section 19 of the 1984 Act, then, provided that the FMC shall have accepted, as sufficient for that purpose, the Applicant's application, supported by evidence of a financial rating for the Guarantor of Class V or higher under the Financial Size Categories of A.M. Best & Company or equivalent from an acceptable international rating organization on such rating organization's letterhead or designated form, or, in the case of Guaranty provided by Underwriters at Lloyd's, documentation verifying membership in Lloyd's, or, in the case of surplus lines insurers, documentation verifying inclusion on a current ''white list'' issued by the Non-Admitted Insurers' Information Office of the National Association of Insurance Commissioners, the undersigned Guarantor certifies that it has sufficient and acceptable assets located in the United States to cover all damages arising from the transportation-related activities of the covered OTI as specified under the 1984 Act.

2. *Now, Therefore,* The condition of this obligation is that the penalty amount of this Guaranty shall be available to pay any judgment obtained or any settlement made pursuant to a claim under 46 CFR § 515.23(b) for damages against the Applicant arising from the Applicant's transportation-related activities or order for reparations issued pursuant to section 11 of the 1984 Act, 46 U.S.C. app. 1710, or any penalty assessed against the Principal pursuant to section 13 of the 1984 Act, 46 U.S.C. app. 1712.

3. The undersigned Guarantor hereby consents to be sued directly in respect of any *bona fide* claim owed by Applicant for damages, reparations or penalties arising from Applicant's transportation-related activities under the 1984 Act, in the event that such legal liability has not been discharged by the Applicant after any such claimant has obtained a final judgment (after appeal, if any) against the Applicant from a United States Federal or State Court of competent jurisdiction and has complied with the procedures for collecting on such a judgment pursuant to 46 CFR § 515.23(b), the FMC, or where all parties and claimants otherwise mutually consent, from a foreign court, or where such claimant has become entitled to payment of a specified sum by virtue of a compromise settlement agreement made with the Applicant and/or Guarantor pursuant to 46 CFR § 515.23(b), whereby, upon payment of the agreed sum, the Guarantor is to be fully, irrevocably and unconditionally discharged from all further liability to such claimant. In the case of a guaranty covering the liability of a group or association of OTIs, Guarantor's obligation extends only to such damages, reparations or penalties described herein as are not covered by another insurance policy, guaranty or surety bond held by the OTI(s) against which a claim or final judgment has been brought.

4. The Guarantor's liability under this Guaranty in respect to any claimant shall not exceed the amount of the guaranty; and the aggregate amount of the Guarantor's liability under this Guaranty shall not exceed the amount per OTI set forth in 46 CFR § 515.21 or the amount per group or association of OTIs set forth in 46 CFR § 515.21 in aggregate.

5. The Guarantor's liability under this Guaranty shall attach only in respect of such activities giving rise to a cause of action against the Applicant, in respect of any of its transportation-related activities under the 1984 Act, occurring after the Guaranty has become effective, and before the expiration date of this Guaranty, which shall be the date thirty (30) days after the date of receipt by FMC of notice in writing that either Applicant or the Guarantor has elected to terminate this Guaranty. The Guarantor and/or Applicant specifically agree to file such written notice of cancellation.

6. Guarantor shall not be liable for payments of any of the damages, reparations or penalties hereinbefore described which arise as the result of any transportation-related activities of Applicant after the cancellation of the Guaranty, as herein provided, but such cancellation shall not affect the liability of the Guarantor for the payment of any such damages, reparations or penalties prior to the date such cancellation becomes effective.

7. Guarantor shall pay, subject to the limit of the amount per OTI set forth in 46 CFR § 515.21, directly to a claimant any sum or sums which Guarantor, in good faith, determines that the Applicant has failed to pay and would be held legally liable by reason of Applicant's transportation-related activities, or its legal responsibilities under the 1984 Act and the rules and regulations of the FMC, made by Applicant while this agreement is in effect, regardless of the financial responsibility or lack thereof, or the solvency or bankruptcy, of Applicant.

8. Applicant or Guarantor shall immediately give written notice to the FMC of all lawsuits filed, judgments rendered, and payments made under the Guaranty.

9. Applicant and Guarantor agree to handle the processing and adjudication of claims by claimants under the Guaranty established herein in the United States, unless by mutual consent of all parties and claimants another country is agreed upon. Guarantor agrees to appoint an agent for service of process in the United States.

10. This Guaranty shall be governed by the laws in the State of __ to the extent not inconsistent with the rules and regulations of the FMC.

11. This Guaranty is effective the day of _____ ,_____ ,_____ 12:01 a.m., standard time at the address of the Guarantor as stated herein and shall continue in force until terminated as herein provided.

12. The Guarantor hereby designates as the Guarantor's legal agent for service of process domiciled in the United States _____, with offices located in the United States at _____ , for the purposes of enforcing the Guaranty described herein.

_____
(Place and Date of Execution)

_____
(Type Name of Guarantor)

_____
(Type Address of Guarantor)

By

_____
(Signature and Title)

Appendix D to Subpart C—Ocean Transportation Intermediary (OTI) Group Bond Form [FMC–69]

Form FMC–69

Federal Maritime Commission

Ocean Transportation Intermediary (OTI) Group Supplemental Coverage Bond Form (Section 19, Shipping Act of 1984, as amended by the Ocean Shipping Reform Act of 1998 and the Coast Guard Authorization Act of 1998)

_____[indicate whether *NVOCC* or *Freight Forwarder*], as Principal (hereinafter ''Principal''), and

_____

as Surety (hereinafter ''Surety'') are held and firmly bound unto the United States of America in the sum of $_____ for the payment of which sum we bind ourselves, our heirs, executors, administrators, successors and assigns, jointly and severally.

Whereas, (Principal) _____ operates as a group or association of OTIs in the waterborne foreign commerce of the United States and pursuant to section 19 of the Shipping Act of 1984, as amended by the Ocean Shipping Reform Act of 1998 and the Coast Guard Authorization Act of 1998 (''1984 Act''), files this bond with the Federal Maritime Commission;

Now, therefore, the conditions of this obligation are that the penalty amount of this bond shall be available to pay any judgment obtained or any settlement made pursuant to a claim under 46 CFR § 515.23(b) against the OTIs enumerated in Appendix A of this bond for damages arising from any or all of the identified OTIs' transportation-related activities under the 1984 Act, 46 U.S.C. app. 1701 *et seq.*, or order for reparations issued pursuant to section 11 of the 1984 Act, 46 U.S.C. app. 1710, or any penalty assessed pursuant to section 13 of the 1984 Act, 46 U.S.C. app. 1712, that are not covered by the identified OTIs' individual insurance policy(ies), guaranty(ies) or surety bond(s).

This bond shall inure to the benefit of any and all persons who have obtained a judgment or made a settlement pursuant to a claim under 46 CFR § 515.23(b) for damages against any or all of the OTIs identified in Appendix A not covered by said OTIs' insurance policy(ies), guaranty(ies) or surety bond(s) arising from said OTIs' transportation-related activities under the 1984 Act, or order for reparation issued pursuant to section 11 of the 1984 Act, and to the benefit of the Federal Maritime Commission for any penalty assessed against said OTIs pursuant to section 13 of the 1984 Act. However, the bond shall not apply to shipments of used household goods and personal effects for the account of the Department of Defense or the account of federal civilian executive agencies shipping under the International Household Goods Program administered by the General Services Administration.

The Surety consents to be sued directly in respect of any *bona fide* claim owed by any or all of the OTIs identified in Appendix A for damages, reparations or penalties arising from the transportation-related activities under the 1984 Act of the OTIs in the event that such legal liability has not been discharged by the OTIs or Surety after a claimant has obtained a final judgment (after appeal, if any) against the OTIs from a United States Federal or State Court of competent jurisdiction and has complied with the procedures for collecting on such a judgment pursuant to 46 CFR § 515.23(b), the Federal Maritime Commission, or where all parties and claimants otherwise mutually consent, from a foreign court, or where such claimant has become entitled to payment of a specified sum by virtue of a compromise settlement agreement made with the OTIs and/or Surety pursuant to 46 CFR § 515.23(b), whereby, upon payment of the agreed sum, the Surety is to be fully, irrevocably and unconditionally discharged from all further liability to such claimant.

The liability of the Surety shall not be discharged by any payment or succession of payments hereunder, unless and until such payment or payments shall aggregate the penalty of this bond, and in no event shall the Surety's total obligation hereunder exceed the amount per member OTI set forth in 46 CFR § 515.21 identified in Appendix A, or the amount per group or association of OTIs set forth in 46 CFR § 515.21, regardless of the number of OTIs, claims or claimants.

This bond is effective the _____ day of _____, _____, and shall continue in effect until discharged or terminated as herein provided. The Principal

or the Surety may at any time terminate this bond by written notice to the Federal Maritime Commission at its office in Washington, DC. Such termination shall become effective thirty (30) days after receipt of said notice by the Commission. The Surety shall not be liable for any transportation-related activities of the OTIs identified in Appendix A as covered by the Principal after the expiration of the 30-day period, but such termination shall not affect the liability of the Principal and Surety for any transportation-related activities occurring prior to the date when said termination becomes effective.

The Principal or financial responsibility provider will promptly notify the underwriting Surety and the Director, Bureau of Tariffs, Certification and Licensing, Federal Maritime Commission, Washington, DC 20573, of any additions, deletions or changes to the OTIs enumerated in Appendix A. In the event of additions to Appendix A, coverage will be effective upon receipt of such notice, in writing, by the Commission at its office in Washington, DC. In the event of deletions to Appendix A, termination of coverage for such OTI(s) shall become effective 30 days after receipt of written notice by the Commission. Neither the Principal nor the Surety shall be liable for any transportation-related activities of the OTI(s) deleted from Appendix A after the expiration of the 30-day period, but such termination shall not affect the liability of the Principal and Surety for any transportation-related activities of said OTI(s) occurring prior to the date when said termination becomes effective.

The underwriting Surety will promptly notify the Director, Bureau of Tariffs, Certification and Licensing, Federal Maritime Commission, Washington, DC 20573, of any claim(s) against this bond.

Signed and sealed this _____ day of _____, _____,
(Please type name of signer under each signature).

_____
Individual Principal or Partner

_____
Business Address

_____
Individual Principal or Partner

_____
Business Address

_____
Individual Principal or Partner

_____
Business Address
Trade Name, if Any

_____
Corporate Principal

_____
Place of Incorporation
Trade Name, if Any

_____
Business Address (Affix Corporate Seal)

_____
By

_____
Title

_____
Principal's Agent for Service of Process (Required if Principal is not a U.S. Corporation)

_____
Agent's Address

_____
Corporate Surety

_____
Business Address (Affix Corporate Seal)

_____
By

_____
Title

Subpart D—Duties and Responsibilities of Ocean Transportation Intermediaries; Reports to Commission

§ 515.31 General duties.

(a) *License; name and number.* Each licensee shall carry on its business only under the name in which its license is issued and only under its license number as assigned by the Commission. When the licensee's name appears on shipping documents, its Commission license number shall also be included.

(b) *Stationery and billing forms.* The name and license number of each licensee shall be permanently imprinted on the licensee's office stationery and billing forms. The Commission may temporarily waive this requirement for good cause shown if the licensee rubber stamps or types its name and Commission license number on all papers and invoices concerned with any ocean transportation intermediary transaction.

(c) *Use of license by others; prohibition.* No licensee shall permit its license or name to be used by any person who is not a *bona fide* individual employee of the licensee. Unincorporated branch offices of the licensee may use the license number and name of the licensee if such branch offices:

(1) have been reported to the Commission in writing; and

(2) are covered by increased financial responsibility in accordance with § 515.21(a)(4).

(d) *Arrangements with ocean transportation intermediaries whose licenses have been revoked.* Unless prior written approval from the Commission has been obtained, no licensee shall, directly or indirectly:

(1) Agree to perform ocean transportation intermediary services on shipments as an associate, correspondent, officer, employee, agent, or sub-agent of any person whose license has been revoked or suspended pursuant to § 515.16;

(2) Assist in the furtherance of any ocean transportation intermediary business of such person;

(3) Share forwarding fees or freight compensation with any such person; or

(4) Permit any such person, directly or indirectly, to participate, through ownership or otherwise, in the control or direction of the ocean transportation intermediary business of the licensee.

(e) *False or fraudulent claims, false information.* No licensee shall prepare or file or assist in the preparation or filing of any claim, affidavit, letter of indemnity, or other paper or document concerning an ocean transportation intermediary transaction which it has reason to believe is false or fraudulent, nor shall any such licensee knowingly impart to a principal, shipper, common carrier or other person, false information relative to any ocean transportation intermediary transaction.

(f) *Errors and omissions of the principal or shipper.* A licensee who has reason to believe that its principal or shipper has not, with respect to a shipment to be handled by such licensee, complied with the laws of the United States, or has made any error or misrepresentation in, or omission from, any export declaration, bill of lading, affidavit, or other document which the principal or shipper executes in connection with such shipment, shall advise its principal or shipper promptly of the suspected noncompliance, error, misrepresentation or omission, and shall decline to participate in any transaction involving such document until the matter is properly and lawfully resolved.

(g) *Response to requests of Commission.* Upon the request of any authorized representative of the Commission, a licensee shall make available promptly for inspection or reproduction all records and books of account in connection with its ocean transportation intermediary business, and shall respond promptly to any lawful inquiries by such representative.

(h) *Express written authority.* No licensee shall endorse or negotiate any draft, check, or warrant drawn to the order of its principal or shipper without the express written authority of such principal or shipper.

(i) *Accounting to principal or shipper.* Each licensee shall account to its principal(s) or shipper(s) for overpayments, adjustments of charges, reductions in rates, insurance refunds, insurance monies received for claims, proceeds of C.O.D. shipments, drafts, letters of credit, and any other sums due such principal(s) or shipper(s).

§ 515.32 Freight forwarder duties.

(a) *Notice of shipper affiliation.* When a licensed freight forwarder is a shipper or seller of goods in international

commerce or affiliated with such an entity, the licensed freight forwarder shall have the option of:

(1) Identifying itself as such and/or, where applicable, listing its affiliates on its office stationery and billing forms, or

(2) Including the following notice on such items:

This company is a shipper or seller of goods in international commerce or is affiliated with such an entity. Upon request, a general statement of its business activities and those of its affiliates, along with a written list of the names of such affiliates, will be provided.

(b) *Arrangements with unauthorized persons.* No licensed freight forwarder shall enter into an agreement or other arrangement (excluding sales agency arrangements not prohibited by law or this part) with an unlicensed person that bestows any fee, compensation, or other benefit upon the unlicensed person. When a licensed freight forwarder is employed to perform forwarding services by the agent of the person responsible for paying for such services, the licensed freight forwarder shall also transmit a copy of its invoice for services rendered to the person paying those charges.

(c) *Information provided to the principal.* No licensed freight forwarder shall withhold any information concerning a forwarding transaction from its principal, and each licensed freight forwarder shall comply with the laws of the United States and shall exercise due diligence to assure that all information provided to its principal or provided in any export declaration, bill of lading, affidavit, or other document which the licensed freight forwarder executes in connection with a shipment is accurate.

(d) *Invoices; documents available upon request.* Upon the request of its principal(s), each licensed freight forwarder shall provide a complete breakout of its charges and a true copy of any underlying document or bill of charges pertaining to the licensed freight forwarder's invoice. The following notice shall appear on each invoice to a principal:

Upon request, we shall provide a detailed breakout of the components of all charges assessed and a true copy of each pertinent document relating to these charges.

§ 515.33 Records required to be kept.

Each licensed freight forwarder shall maintain in an orderly and systematic manner, and keep current and correct, all records and books of account in connection with its forwarding business. These records must be kept in the United States in such manner as to enable authorized Commission personnel to readily determine the licensed freight forwarder's cash position, accounts receivable and accounts payable. The licensed freight forwarder may maintain these records in either paper or electronic form, which shall be readily available in usable form to the Commission; the electronically maintained records shall be no less accessible than if they were maintained in paper form. These recordkeeping requirements are independent of the retention requirements of other federal agencies. The licensed freight forwarder must maintain the following records for a period of five years:

(a) *General financial data.* A current running account of all receipts and disbursements, accounts receivable and payable, and daily cash balances, supported by appropriate books of account, bank deposit slips, canceled checks, and monthly reconciliation of bank statements.

(b) *Types of services by shipment.* A separate file shall be maintained for each shipment. Each file shall include a copy of each document prepared, processed, or obtained by the licensee, including each invoice for any service arranged by the licensee and performed by others, with respect to such shipment.

(c) *Receipts and disbursements by shipment.* A record of all sums received and/or disbursed by the licensee for services rendered and out-of-pocket expenses advanced in connection with each shipment, including specific dates and amounts.

(d) *Special contracts.* A true copy, or if oral, a true and complete memorandum, of every special arrangement or contract between a licensed freight forwarder and a principal, or modification or cancellation thereof. *Bona fide* shippers shall also have access to such records upon reasonable request.

§ 515.34 Regulated Persons Index.

The Regulated Persons Index is a database containing the names, addresses, phone/fax numbers and financial responsibility information, where applicable, of Commission-regulated entities. The database may be purchased for $84 by contacting Bureau of Tariffs, Certification and Licensing, Federal Maritime Commission, Washington, DC 20573. Contact information is listed on the Commission's website at www.fmc.gov.

Subpart E—Freight Forwarding Fees and Compensation

§ 515.41 Forwarder and principal; fees.

(a) *Compensation or fee sharing.* No licensed freight forwarder shall share, directly or indirectly, any compensation or freight forwarding fee with a shipper, consignee, seller, or purchaser, or an agent, affiliate, or employee thereof; nor with any person advancing the purchase price of the property or guaranteeing payment therefor; nor with any person having a beneficial interest in the shipment.

(b) *Receipt for cargo.* Each receipt for cargo issued by a licensed freight forwarder shall be clearly identified as ''Receipt for Cargo'' and be readily distinguishable from a bill of lading.

(c) *Special contracts.* To the extent that special arrangements or contracts are entered into by a licensed freight forwarder, the forwarder shall not deny equal terms to other shippers similarly situated.

(d) *Reduced forwarding fees.* No licensed freight forwarder shall render, or offer to render, any freight forwarding service free of charge or at a reduced fee in consideration of receiving compensation from a common carrier or for any other reason. *Exception:* A licensed freight forwarder may perform freight forwarding services for recognized relief agencies or charitable organizations, which are designated as such in the tariff of the common carrier, free of charge or at reduced fees.

(e) *In-plant arrangements.* A licensed freight forwarder may place an employee or employees on the premises of its principal as part of the services rendered to such principal, provided:

(1) The in-plant forwarder arrangement is reduced to writing in the manner of a special contract under § 515.33(d), which shall identify all services provided by either party (whether or not constituting a freight forwarding service); state the amount of compensation to be received by either party for such services; set forth all details concerning the procurement, maintenance or sharing of office facilities, personnel, furnishings, equipment and supplies; describe all powers of supervision or oversight of the licensee's employee(s) to be exercised by the principal; and detail all procedures for the administration or management of in-plant arrangements between the parties; and

(2) The arrangement is not an artifice for a payment or other unlawful benefit to the principal.

§ 515.42 Forwarder and carrier; compensation.

(a) *Disclosure of principal.* The identity of the shipper must always be disclosed in the shipper identification box on the bill of lading. The licensed freight forwarder's name may appear with the name of the shipper, but the forwarder must be identified as the shipper's agent.

(b) *Certification required for compensation.* A common carrier may pay compensation to a licensed freight forwarder only pursuant to such common carrier's tariff provisions. Where a common carrier's tariff provides for the payment of compensation, such compensation shall be paid on any shipment forwarded on behalf of others where the forwarder has provided a written certification as prescribed in paragraph (c) of this section and the shipper has been disclosed on the bill of lading as provided for in paragraph (a) of this section. The common carrier shall be entitled to rely on such certification unless it knows that the certification is incorrect. The common carrier shall retain such certifications for a period of five (5) years.

(c) *Form of certification.* Where a licensed freight forwarder is entitled to compensation, the forwarder shall provide the common carrier with a signed certification which indicates that the forwarder has performed the required services that entitle it to compensation. The required certification may be placed on one copy of the relevant bill of lading, a summary statement from the forwarder, the forwarder's compensation invoice, or as an endorsement on the carrier's compensation check. Each forwarder shall retain evidence in its shipment files that the forwarder, in fact, has performed the required services enumerated on the certification. The certification shall read as follows:

The undersigned hereby certifies that neither it nor any holding company, subsidiary, affiliate, officer, director, agent or executive of the undersigned has a beneficial interest in this shipment; that it is the holder of valid FMC License No., issued by the Federal Maritime Commission and has performed the following services:

(1) Engaged, booked, secured, reserved, or contracted directly with the carrier or its agent for space aboard a vessel or confirmed the availability of that space; and

(2) Prepared and processed the ocean bill of lading, dock receipt, or other similar document with respect to the shipment.

(d) *Compensation pursuant to tariff provisions.* No licensed freight forwarder, or employee thereof, shall accept compensation from a common carrier which is different from that specifically provided for in the carrier's effective tariff(s). No conference or group of common carriers shall deny in the export commerce of the United States compensation to an ocean freight forwarder or limit that compensation, as provided for by section 19(e)(4) of the Act and 46 CFR part 535.

(e) *Electronic data interchange.* A licensed freight forwarder may own, operate, or otherwise maintain or supervise an electronic data interchange-based computer system in its forwarding business; however, the forwarder must directly perform value-added services as described in paragraph (c) of this section in order to be entitled to carrier compensation.

(f) *Compensation; services performed by underlying carrier; exemptions.* No licensed freight forwarder shall charge or collect compensation in the event the underlying common carrier, or its agent, has, at the request of such forwarder, performed any of the forwarding services set forth in § 515.2(i), unless such carrier or agent is also a licensed freight forwarder, or unless no other licensed freight forwarder is willing and able to perform such services.

(g) *Duplicative compensation.* A common carrier shall not pay compensation for the services described in paragraph (c) of this section more than once on the same shipment.

(h) *Non-vessel-operating common carriers; compensation.* (1) A licensee operating as an NVOCC and a freight forwarder, or a person related thereto, may collect compensation when, and only when, the following certification is made together with the certification required under paragraph (c) of this section:

The undersigned certifies that neither it nor any related person has issued a bill of lading or otherwise undertaken common carrier responsibility as a non-vessel-operating common carrier for the ocean transportation of the shipment covered by this bill of lading.

(2) Whenever a person acts in the capacity of an NVOCC as to any shipment, such person shall not collect compensation, nor shall any underlying ocean common carrier pay compensation to such person, for such shipment.

(i) *Compensation; beneficial interest.* A licensed freight forwarder may not receive compensation from a common carrier with respect to any shipment in which the forwarder has a beneficial interest or with respect to any shipment in which any holding company, subsidiary, affiliate, officer, director, agent, or executive of such forwarder has a beneficial interest.

§ 515.91 OMB control number assigned pursuant to the Paperwork Reduction Act.

The Commission has received OMB approval for this collection of information pursuant to the Paperwork Reduction Act of 1995, as amended. In accordance with that Act, agencies are required to display a currently valid control number. The valid control number for this collection of information is 3072–0012. By the Commission.*

Bryant L. VanBrakle,

Secretary.

[FR Doc. 99–5263 Filed 3–5–99; 8:45 am]

BILLING CODE 6730–01–P

*Commissioner Moran voted nay on §§ 515.21(a) and 515.41(e)(1).

federal register

Monday
March 8, 1999

Part IV

Federal Maritime Commission

46 CFR Part 530

Service Contracts Subject to the Shipping Act of 1984; Interim Final Rule

FEDERAL MARITIME COMMISSION

46 CFR Parts 514 and 530

[Docket No. 98–30]

Service Contracts Subject to the Shipping Act of 1984

AGENCY: Federal Maritime Commission.

ACTION: Interim final rule.

SUMMARY: The Federal Maritime Commission has revised its regulations governing service contracts between shippers and ocean common carriers to implement changes made to the Shipping Act of 1984 (''Act'') by Pub. L. 105–258 (the Ocean Shipping Reform Act of 1998) and section 424 of Pub. L. 105–383 (the Coast Guard Authorization Act of 1998). Specifically, the Commission has revised its regulations implementing section 8(c) of the Act and has created a new 46 CFR part 530 to govern service contract filing. The interim nature of this rule is due to a major revision of the proposed regulation, which did not include the internet-based filing system of the interim final rule. The proposed regulations have been revised to accommodate the alternative system. Portions of the proposed rule have been redrafted for clarity, repetitive sections have been deleted and the remaining sections are accordingly renumbered.

DATES: Effective date May 1, 1999. Submit comments on this interim final rule on or before April 1, 1999.

ADDRESSES: Address all comments to: Bryant L. VanBrakle, Secretary, Federal Maritime Commission, 800 North Capitol Street, NW., Room 1046, Washington, DC 20573–0001.

FOR FURTHER INFORMATION CONTACT:

Thomas Panebianco, General Counsel, Federal Maritime Commission, 800 North Capitol Street, NW., Washington, DC 20573–0001, (202) 523–5740

Austin L. Schmitt, Director, Bureau of Tariffs, Certification and Licensing, Federal Maritime Commission, 800 North Capitol Street, NW., Washington, DC 20573–0001, (202) 523–5796

SUPPLEMENTARY INFORMATION: On December 23, 1998, the Federal Maritime Commission (''Commission'') issued proposed regulations to implement changes to the Shipping Act of 1984 (''Act'') mandated by the Ocean Shipping Reform Act of 1998, Pub. L. 105–258, 112 Stat. 1902 (''OSRA''), enacted on October 14, 1998. 63 FR 71062–71076. OSRA made several changes to the existing system by which the Federal Maritime Commission regulates ocean shipping in the foreign commerce of the United States, particularly to the provisions governing service contracts under the Act.

As noted in the Notice of Proposed Rulemaking (''NPR''), the Commission sought to balance the general deregulatory intent of OSRA with the important oversight role that Congress has assigned to it, through the proposed rules. The difficulty in achieving that balance is apparent in the reactions the proposal received from members of the industry. Further, while the Commission recognized that the filing requirements must be crafted with an appreciation for regulated entities' interests in simple, speedy and straightforward filing procedures, the Commission also noted in the NPR that the procedures must enable the Commission to fulfill its statutory duty to guard against section 10 violations and perform its section 6 functions. As several of the comments urge, this responsibility on the part of the Commission is especially important as service contracts will be confidential and potentially aggrieved parties will have to rely on the Commission for oversight. This will be complicated by the predicted increase in the sheer number of service contracts filed. It was with these goals in mind that the Commission originally proposed the draft regulations, designed to enable the Commission to fulfill its regulatory mandate while imposing a minimal burden on regulated parties.

Comments

The Commission received twenty-eight (28) responses to the NPR, from the following: Seaboard Marine (''Seaboard''); International Longshoremen's Association (''ILA''); Cargo Brokers International, Inc. (''CBI''); China Ocean Shipping (Group) Company (''COSCO''); Effective Tariff Management Corporation (''ETM''); Trans-Atlantic Conference Agreement (''TACA'') (endorses OCWG comments); Household Goods Forwarders Association of America, Inc. (''HGFAA''); Council of European & Japanese National Shipowners' Association (''CENSA''); Bicycle Shippers' Association, Inc. (''BSA''); United States Council for International Business, Sea Transportation Committee (''USCIB''); International Longshore & Warehouse Union (''ILWU'') (endorses ILA comments); IBP, Inc. (''IBP''); National Industrial Transportation League (''NITL''); Japan-United States Eastbound Freight Conference (''JUSEFC''); American Institute for Shippers' Associations, Inc. (''AISA''); Ocean Carrier Working Group Agreement (''OCWG''); National Customs Brokers & Forwarders Association of America, Inc. (''NCBFAA''); American Import Shippers' Association (''AImpSA''); E.I. DuPont de Nemours and Company (''DuPont''); Conagra, Inc. (''Conagra''); P&O Nedlloyd, Ltd. (''P&O''); Pacific Coast Tariff Bureau (''PTCB''); American President Lines, Ltd., Sea-Land Service, Inc., Crowley Maritime Corporation, Farrell Lines, Inc., Lykes Lines Ltd., LLC, the Transportation Institute, the American Maritime Congress, and the Maritime Institute for Research and Development (joint comments) (''Carriers''); Chemical Manufacturers Association (''CMA''); American President Lines, Ltd. and APL Co. Pte. Ltd. (''APL'') (endorses OCWG comments); Sea-Land Service, Inc. (''Sea-Land'') (endorses OCWG and TACA comments); American International Freight Association and Transportation Intermediaries Association (''AIFA'') (joint comments) (endorses NITL comments); and Wal-Mart Stores, Inc. (''Wal-Mart'').

These comments reflected the views of large, beneficial interest shippers (DuPont, Wal-Mart, Conagra, and IBP), shippers' associations and representatives (BSA, NITL, AISA, AImpSA, and CMA), labor organizations (ILA and ILWU), carriers, conferences, agreements and carrier associations (APL, COSCO, P&O, CENSA, OCWG, TACA, JUSEFC, Sea-Land Service, Inc., Crowley Maritime Corporation, Farrell Lines, Inc., Lykes Lines Ltd., LLC, the Transportation Institute, the American Maritime Congress, and the Maritime Institute for Research and Development), ocean transportation intermediaries (CBI, HGFAA, NCBFAA, AIFA and the Transportation Intermediaries Association), third-party filing services (ETM and PTCB), and, finally, the American affiliate of the International Chamber of Commerce, representing the general business interests of shippers and carriers (USCIB).

A significant number of comments generally oppose the proposed regulations as inflexible, overly technical, rigid, burdensome and costly, and, as such, inconsistent with the deregulatory aims of OSRA. OCWG; NITL; USCIB; P&O; Sea-Land; Seaboard; CENSA and Conagra. Most of the opposition to the proposed regulation is aimed at the Commission's proposal to adapt an electronic system already in its possession, and the technical constraints that would accompany the use of that system. There are also comments that applaud the Commission's proposal as a

conscientious effort to implement a key feature of OSRA in a timely manner, but which also express concern that some of the provisions may be at odds with OSRA. Conagra.

Several other comments are just as strongly in favor of the regulations as proposed, and support them as a fair reflection and implementation of the changes intended to be made by Congress through OSRA. AISA; AImpSA; NCBFAA; and BSA. Shipper groups urge the Commission to be mindful that, under OSRA, smaller shippers will be disadvantaged and thus will rely more on FMC oversight. Therefore, they argue, OSRA has placed a heightened obligation on the Commission to oversee and prevent potential service contract discrimination, and unreasonable refusals to deal or negotiate. They also comment that while the proposed regulations represent positive initial steps the Commission must take to fulfill its oversight role, they fail to propose adequately strong regulations to enforce section 10's anti-discrimination prohibitions. The shippers further argue that OSRA directed the Commission to concentrate on discrimination based on shipper status, and the regulations fall short in this respect as well.

Section 530.3 Definitions

One commenter takes issue with the proposed definition of ''conference,'' being different from the statute, and not referring to the requirement of a common tariff. APL, 1. The comment suggests that the definition track the statute. The change to the definition of ''conference'' in this rule conforms with the changes made in the Commission's rulemaking on agreements, Docket No. 98-26, and tariffs, Docket No. 98–29.

Similarly, the Commission in this proceeding had proposed a new definition of ''ocean common carrier'' to match that proposed in the agreements rulemaking. However, upon receipt of opposition to that proposal from one commenter and little input from other industry interests, the Commission has determined to carry over its former definition of ''ocean common carrier'' and take the matter up in a later, separate rulemaking. *See,* Docket No. 98–26.

APL also questioned the proposed definition of ''service contract.'' APL, 1–2. The comment urges the Commission to adopt a definition of ''service contract'' which would correct a ''persisting drafting error in OSRA'' as a contract between one or more shippers and an ocean common carrier or an agreement between or among carriers. APL, 1–2. APL complains that this definition literally contemplates an agreement that is a party to an agreement, a circular and legally impossible definition. APL, 2. The comment suggests either redefining or interpreting OSRA so that wherever the statute refers to ''an agreement,'' that the meaning will be two or more ocean common carriers acting pursuant to an agreement on file with the Commission or exempt from such filing. APL, 2.

Prior to revisions made by OSRA, the Act provided that only a certain type of agreement between ocean common carriers, namely a conference agreement, could enter into service contracts. OSRA changed the definition of service contract from ''a contract between a shipper and an ocean common carrier or conference'' to ''a written contract, other than a bill of lading or a receipt, between one or more shippers and an individual ocean common carrier or an agreement between or among ocean common carriers.'' This had two effects. First, it allows a group of two or more unrelated (i.e. not a shippers' association) shippers to jointly enter into a service contract. Second, it allows any ocean common carrier agreement (not just a conference agreement) to enter into service contracts. Therefore, the definition of service contract in the regulation is revised to appear as it does in the Act. APL's observation appears correct. The authority to enter into service contracts extends to carriers acting collectively pursuant to a filed agreement, even if the agreement does not provide for any central administrative entity.

For the sake of clarity, the definitions of ''effective date'' and ''expiration date'' are moved from the Appendix to the definitions section, § 530.3. Finally, a definition of ''motor vehicle'' is added, comporting with the definition of that term in the Commission's tariff regulation, Docket No. 98–29. *See also infra,* discussion of exempt commodities.

Section 530.4 Confidentiality

Carriers, shippers and one filing service commented on § 530.4 of the proposed rule. While most agree that the Commission has the authority to share service contract information with other federal agencies, they also request clarification on how the Commission intends to ensure that other agencies maintain confidentiality. CMA, 3; DuPont, 5. One suggests the following addition to the section:

> any information from or access to service contracts to another agency of the Federal government shall, to the full extent permitted by law, also will be (sic) held in confidence by such other agency or notice of the confidentiality of such information will be provided by the Commission to such other agency.

ETM, 1.

Another suggests,

> The Commission shall seek to ensure, prior to providing access to confidential service contract information to another Government agency, that such other agency will protect the confidentiality of the service contract information.

NITL, 23.

Two comments suggest that the regulations should ensure that information shared not be inadvertently publicized through the Freedom of Information Act (''FOIA'') or other means, and that the same level of protection afforded within the Commission should follow the information when it is shared with another federal agency. DuPont, 5; NITL, 23.

Exemption 4 of FOIA would presumably protect service contract information confidentially filed with the Commission from requests for public disclosure. 5 U.S.C. 552(b)(4)(1994). Exemption 4 of FOIA protects ''commercial or financial information obtained from a person (that is) privileged or confidential.'' The exemption affords protection to those submitters who are required to furnish commercial or financial information to the government by safeguarding them from the competitive disadvantages that could result from disclosure. *See* U.S. Department of Justice, Office of Information and Privacy, *Freedom of Information Act Guide and Privacy Act Overview*, at 123.

Another comment suggests this provision should be amended to provide that all confidential information will be provided to other government agencies which have a Memorandum of Understanding (''MOU'') agreeing that they will maintain confidentiality of the information in accordance with the letter and spirit of OSRA. Conagra, 4. The Commission has concluded that it will provide confidential service contract information only to federal government agencies with which it has an MOU ensuring that the recipient agency will accordingly protect the information from public disclosure. This should adequately address the reasonable concerns expressed in the comments.

One commenter asserts that the confidentiality requirement of the Act applies to the Commission only, and does not give the Commission any authority to review the parties' complaints for breach of a

confidentiality clause in the contract itself. Such a breach, they argue is purely a contract matter and as such, for a court to decide. APL, 2. The comment suggests that in order to clarify this point, the phrase ''by the Commission'' should be added at the end of the first sentence. APL, 2. The statute appears to be adequately clear on this matter, and there is no need for further clarification at this time.

Wal-Mart is concerned that disclosure of the actual international freight rate required by U.S. Customs Service (''USCS'') (form CF 7501) will provide an opportunity for unscrupulous customs brokers to obtain confidential rate information and disclose it. Wal-Mart, 1. Wal-Mart is concerned that, even with a confidentiality agreement with the broker, the monitoring and enforcement of such confidentiality agreements may prove difficult, or impossible. Wal-Mart, 2. Wal-Mart therefore requests the Commission coordinate with other federal government agencies, especially USCS, in its final implementation of the regulations to ensure that the confidentiality of service contracts be preserved by those other agencies, and suggests that one approach may be to declare average or estimated freight rates on the CF 7501 form supplemented by actual data directly to USCS without using the broker. Wal-Mart, 2.

The commenter's request is outside the Commission's jurisdiction. While it understands Wal-Mart's concerns, the Commission has no authority to dictate to other agencies what information they may or may not require from the entities they regulate. Therefore, the comment is more appropriately directed towards USCS.

In contrast, one commenter argues that the proposed regulations do not acknowledge limitations on the Commission's authority to release service contract information, recognize the complexity of the associated issues, or provide procedures for making a determination to release information. Carriers, 2. First, the Carriers argue, the Commission's authority to disclose confidential service contract information to other federal government agencies at all is questionable. Carriers, 2. These comments argue that the colloquy between Senators McCain and Hutchison is of limited value for the purpose of legislative history because it followed, rather than preceded, the adoption of the bill which became OSRA. Carriers, 2 n.1. This argument is unconvincing, however, as we note that Senator Hutchison, with specific reference to section 8(c)(2) of S. 414 (which remained unchanged in the final passage of OSRA), remarked on April 21, 1998, that the Commission ''is encouraged to work with affected Federal agencies to address'' their concerns about how they are to ensure rate compliance with U.S. cargo preference law in an era of service contract rate confidentiality. Cong. Rec S3320 (daily ed., April 21, 1998) (statement of Sen. Hutchison). While the statute itself reads only, ''each contract entered into under this subsection * * * shall be filed confidentially with the Commission'' (section 8(c)(2) of OSRA), and ''[w]hen a service contract is filed confidentially with the Commission, a concise statement of the essential terms * * * shall be published and made available to the general public in tariff format'' (section 8(c)(3)), taken with the remarks made on the same day the Senate passed S. 414, the legislative history indicates that it was the intent of the drafters that the confidentiality provision not hamper other federal government agencies which have legitimate need to access the confidentially filed information in order to carry out their respective duties.

There is further indication that the drafters intended that the confidentiality provision would apply to preclude Commission disclosure to the public. As Senator Hutchison remarked in the aforementioned floor colloquy, ''(o)f course * * * confidential service contract information would remain protected *from disclosure to the public* consistent with the Shipping Act of 1984, as amended by the Ocean Shipping Reform Act and other applicable Federal laws.'' Cong. Rec. S11302 (daily ed. Oct. 1, 1998) (Statement of Sen. Hutchison) (emphasis added). This emphasized the importance of the Commission protecting information filed confidentially with it from disclosure to the public, but does not limit the Commission's right to disclose such information to other federal agencies where clearly warranted and justified. Finally, the Commission noted in the NPR that it would only ''allow access to filed contracts to Federal government agencies where appropriate; any such disclosure will not jeopardize the statutory aim of non-disclosure of confidential service contract information to non-governmental entities.'' 63 FR 71065. This continues to correctly express Commission policy on the subject.

The Carriers argue further that even if the authority of the colloquy is accepted, the only exception to the statutory requirement that the Commission keep service contract information confidential is ''to ensure compliance of U.S.-flag ocean common carriers with cargo preference law shipping rate requirements.'' Carriers, 3. Therefore, they contend that this does not authorize the Commission to disclose such information when a government agency is acting in a proprietary capacity as shipper. Carriers, 2. This implies that the following language of the second sentence of proposed § 530.4 is at least over broad: ''Nothing contained in this part shall preclude the Commission from providing certain information from or access to service contracts to another agency of the Federal government of the United States.'' The Carriers are concerned that there is too large a potential for procurement officials to use such information to drive down rates. Carriers, 4.

The Carriers question whether any statutory requirements, including the cargo preference laws, actually exist which would require information from confidentially filed service contracts and further question the relevancy of the information, as procurement is typically based on ''competitively bid, lowest landed cost awards.'' Carriers, 4. We are not persuaded that service contract information should be withheld from agencies that ship cargo with ocean carriers. The Commission, however, is not attempting in these regulations to predict every situation in which the requested information may or may not be relevant to the purposes of the requesting agency. This would be another matter most appropriately addressed by an MOU.

The Carriers' reference to the pending litigation against the Department of Defense (''DoD'') serves to further illustrate this point. Carriers, 5. The Commission simply does not have the ability to predict in what situations confidential service contract information may or may not be relevant to the execution of the requesting agency's statutory duties, but can require that the agency support its request with a good faith argument for relevancy, in an accordingly drafted MOU.

Furthermore, because Congress did not indicate that it wished to limit the agencies with which the Commission should cooperate, but instead used the term ''other federal agencies,'' the Commission interprets this admonition to include agencies other than DoD and laws other than the Cargo Preference Act of 1904. Again, as the Commission cannot presently predict which statutory requirements other agencies may have for confidential service contract information, the Commission declines to add to its regulations at this

time any such limitation on its future action. Rather, the Commission asserts that disclosure of confidentially filed service contract information will only be made to other federal government agencies with which it has negotiated an MOU which will protect the information from disclosure to the public.

The Carriers complain that the proposed regulations do not provide for procedures for informed comment on and consideration of the conflicting interests, but rather appear to envision an approach to such interagency requests on a unilateral and ad hoc basis. Carriers, 2. The Carriers assert that they are entitled to a ''careful and open appraisal'' based on an informed record before the Commission, rather than the approach contemplated by the proposed rule. Carriers at 6. The Carriers' comments appear to request that the Commission create a formal review proceeding for each request before any service contract information is released to a requesting Federal government agency. Again, the MOU should adequately address the Carriers' concerns without requiring that the Commission initiate an adversary proceeding which would require the Commission to implement new procedures, and undertake the time and expense which would accompany each evaluation.

Finally, the Carriers comment that if the Commission does not delete the provision in question, that a separate proceeding should be initiated to ''permit full ventilation of the issues by concerned parties.'' Carriers at 6. On the contrary, it appears that the notice and comment period in this rulemaking proceeding has given the Carriers an opportunity, of which they have availed themselves, to address such issues.

For the foregoing reasons, therefore, the Commission shall require a requesting federal agency to enter into a Memorandum of Understanding that it will protect the confidentiality of any information it receives from the Commission and that such information is necessary to its statutory functions, and adopts as final the language in § 530.4 of the proposed regulations.

Section 530.5 Duty to File

As stated in the NPR, the Commission's past regulations generally imposed on a conference the duty to file and publish service contract material on behalf of its members. 46 CFR 514.4(d) (duty and authority to file). Specifically, the Commission's former regulation placed the duty to file service contracts and publish their essential terms on either: A service contract signatory carrier which is not a member of a conference for the service covered by the contract; or the conference which is signatory or has one or more members for service otherwise covered by the conference agreement. Conferences could file for and on behalf of one or more of its member lines for service outside the scope of the conference agreement. § 514.4(d)(5)(B)(ii). In such case, the statement of essential terms was to be filed simultaneously in both the essential terms publication of the conference and the carriers involved.[1]

The Commission's past approach distinguished duty to file based on the subject matter of the contract itself. In this respect, for contracts entered into by a member of a conference but which fell outside the scope of that conference, the duty to file and publish fell on the signatory carrier. For contracts which concerned subject matter within the scope of a conference agreement, the duty to file and publish fell upon the conference which was the signatory to the contract or whose member or members were signatories. Conferences, under the Commission's prior regulations, were authorized to file and publish for their member lines for services outside the scope of the conference. § 514.4(d)(5)(ii). For such filing, essential terms were required to be published by both individual carrier and conference. *Id.* OCWG suggests that the Commission continue this approach, and merely revise the previous regulations by changing the term ''conference'' to ''agreement.''

In the proposed rule, the Commission recognized that agreement service contracts would pose somewhat different problems for filing and publishing than did conferences, which unlike some other agreements, maintain a central authority or secretariat. The proposed regulation sought to anticipate situations in which members of an agreement without a central authority enter a service contract. The proposal would have allowed members of such an agreement to delegate the filing duty to one member, but also indicated that such delegation would not relieve the other carrier parties from any liability should there be a failure to comply with the filing requirements of the regulations.

OCWG objects to the proposed rules' provisions placing filing requirements generally on individual carriers. OCWG asserts that a carrier breach of contract confidentiality[2] is not a violation of the Act, citing Senator Hutchison's April 21, 1998 floor remarks. OCWG further asserts that a carrier could publish confidential service contract information in the New York Times and not violate the Act. OCWG at 16. We note, however, that some disclosures could raise issues under section 10(b)(13) of the Act which prohibits any common carrier, either alone or in conjunction with any other person, indirectly or directly, from knowingly disclosing, offering, soliciting, or receiving any information concerning the nature, kind, quantity, destination, consignee or routing of any property tendered or delivered to a common carrier without the consent of the shipper or consignee if that information may be used to the detriment or prejudice of the shipper or consignee, may improperly disclose its business transaction to a competitor, or may be used to the detriment or prejudice of any common carrier.

Carriers and conferences urge they should have the ability to take advantage of the efficiencies membership in an agreement provides for the accomplishment of such ministerial acts as filing. OCWG, 13; CENSA, 2; COSCO, 2; JUSEFC, 2–5. The comments of BSA reveal serious concerns shippers rightfully may have about filing done by agents closely controlled by agreement authorities. The comments of COSCO and JUSEFC also recognize this legitimate shipper concern.

The Commission has determined to revise § 530.5 and simplify the filing duties in accordance with the comments. Section 530.5, as revised, places the duty to file on the individual carrier party to a service contract, as Commission regulations always have. For multi-party service contracts, the duty to file falls equally upon all the carrier parties participating or eligible to participate in the contract. Multi-party service contracts must indicate the agreement (conference or otherwise) under whose authority the contract is entered. Carrier parties may designate any agent they choose for filing, including an agreement secretariat. The

[1] While it related to the responsibility to file tariffs, § 514.4(d)(4)(ii)(A) reminded carrier participants in a conference tariff that they are not relieved from the necessity of complying with Commission regulations and the requirements of section 8(a)(1) of the Act.

[2] We agree with the comments that for publication, no confidentiality issue exists. The underlying duty to publish, however, is identical as that for filing. For publication, the Commission's concern lies primarily in ensuring that the public not be misled by the location of the statement of essential terms. When an essential terms publication appears in an individual carrier's tariff, there must be some indication of whether the underlying service contract was made by that carrier independently or jointly as part of an agreement. For further discussion of publication requirements, *see infra,* § 530.12.

Commission shall closely monitor filing or other ministerial tasks undertaken by central authorities for violations of section 10(b)(13) and other activities which may have implications for the Commission's section 6(g) oversight.

Contrary to the assertion of OCWG, simply adopting the former regulation language and substituting the term ''agreement'' for ''conference'' will not account for the individual member of an agreement which wishes to take independent action within the scope of the agreement, but which does not wish to disclose the service contract information to the agreement. The regulation, therefore, makes clear provision for the contract parties' election on who shall be authorized as filer. Furthermore, the regulation would allow shippers to negotiate a requirement, for filing done by a conference or agreement secretariat, for example, that provisions for confidentiality be undertaken, e.g., through the use of ''firewalls.'' Finally, the use of an agent for filing does not relieve the carrier parties in any way for a failure to duly file or publish. They are unquestionably responsible for ensuring their agents comply with these regulatory requirements.

Section 530.6 Certification of Shipper Status

Proposed § 530.6(a) requires each shipper party to a service contract to sign and certify on the signature page of the service contract its shipper status and the status of all its affiliates which have access to the service contract. NITL, AIFA, and DuPont oppose the proposed regulation, and particularly complain that the rationale for the requirement is unclear and the certification itself is burdensome. NITL, 21; AIFA, 3; DuPont, 3. They recommend that this requirement should only apply when the shipper is an NVOCC. DuPont, 3; AIFA, 3, NITL, 21.

NITL, APL and DuPont assert that contracting parties should be able to resolve on their own the capacity in which a particular shipper is acting with respect to the service contract as a matter of negotiation between the parties, not one mandated by the Commission. NITL, 21; APL, 3; DuPont, 3.

The regulation as proposed, however, does not appear to impose any limitations on the commercial negotiations of service contracts. The parties are free to contract with any individual or entity entitled to enter into service contracts under the Act, and in certain capacities (*e.g.*, no NVOCCs as carrier parties).[3] This was one of the compromises made by OSRA: In return for confidentiality, the parties would report their operations to the Commission, in order that it would continue to be able to monitor the industry for prohibited acts.

DuPont is concerned that the requirement would unnecessarily increase the Commission's workload. DuPont, 3. NITL comments that there are less burdensome ways for the Commission to obtain information about the status of a shipper party. For instance, they suggest that the Commission could request the information informally after the service contract has been executed. Further, AIFA comments that the proposed regulation would require the parties to make fine legal judgments. AIFA, 3.

Contrary to several comments, it appears that the certification does not create an unreasonable burden for shippers. Proposed § 530.7 (here renumbered § 530.6) was adopted nearly verbatim from the Commission's current regulation, 46 CFR 514.7(e)(1), which requires the shipper party to certify its status. Original § 514.7(e)(1) had the same intent, namely to enable the Commission to monitor service contract arrangements for discrimination. Rather than increasing any burden on the parties to service contracts, or creating additional workload for the Commission, § 530.6(a) continues to enable the Commission to monitor service contracts for trends in practices and to guard against OSRA's prohibition on refusals to deal and on concerted unjust discrimination based on shipper status. The burden on the shipper signatory is also minimal. Contrary to the comments of AIFA, determining the shipper's status should be relatively simple and shippers have been doing this since the rules were first implemented.

While NITL is correct that there are other ways for the Commission to obtain this information, the method promulgated herein is not unreasonable because the burden it places on service contract parties is light, and it is of high utility to the Commission, not only because of its intrinsic nature, but also because of the early point at which it is provided. Finally, contrary to the concerns of DuPont, the maintenance of this provision will not create an additional burden on the Commission.

Some commenters suggest that the certification provision should be deleted altogether or redrafted. APL, 3; AIFA, 3; NITL, 22. NITL suggests the proposed regulation be revised to read as follows:

> If the shipper contract party or any affiliate or member of a shippers' association entitled to access a service contract is an NVOCC, it shall sign and certify on the signature page of the service contract that its status under the service contract is that of an NVOCC.

NITL, 22.

With respect to the first purpose of the proposed regulation, NITL and DuPont incorrectly assert that OSRA prohibits discriminatory treatment and refusal to deal towards NVOCCs only. As the shippers' comments correctly point out, smaller shippers which negotiate for service contracts through their shippers' associations are also entitled to such protection, as are all shippers, regardless of whether they are beneficial cargo interests, their representatives, or unaffiliated groups of shippers. OSRA prohibits discrimination and refusals to deal based on anything other than valid transportation factors (such as volumes) and the regulation as proposed intends to guard against such discrimination, prohibited by section 10(b)(10) of the Act.

The comments of several shippers' organizations point to the competing congressional mandates with which the Commission must craft these regulations: to allow parties to negotiate their commercial arrangements with as little interference as possible while maintaining its ability to monitor for discrimination and refusals to deal in violation of section 10. AISA, 5. AISA's comments remind the Commission that with confidential contracts, smaller shippers will be disadvantaged and will, therefore, rely more on the Commission's oversight. AISA, 3. AISA asserts that the Act places an affirmative obligation upon carriers to negotiate and deal in good faith with shippers' associations and to offer them competitively equivalent contracts to those offered to beneficial shippers for the same volumes and goods between the same ports. AISA, 5.

AISA asserts that OSRA requires the Commission to establish mechanisms by which it and the public can discover such discrimination, and point out that filing and publishing essential terms of confidential contracts, as well as establishing a listing on the Commission's website is only a first step in the right direction. AISA, 3–6. AISA is disappointed with the proposed regulations because they fail to be strong enough to enforce section 10 anti-

[3] CBI comments that NVOCCs should be able to offer confidential service contract to their shippers. This was explicitly rejected by Congress when it rejected the Gorton Amendment (No. 2287) to S. 414, which would have so allowed. Cong. Rec. S3306–11 (daily ed.) (April 21, 1998).

discrimination prohibitions. Further, they allege that the Commission is wrong in saying the law does not continue to prohibit carrier actions which unreasonably discriminate against small- and medium-sized shippers and shippers' associations. AISA, 3–6.

One commenter urges the Commission to acknowledge Congress' intent that anti-discrimination protections be strengthened and expanded as they apply to shippers' associations and OTIs. BSA, 13–15. NCBFAA believes OSRA directs the Commission to concentrate on discrimination based on a shipper's status as an OTI. NCBFAA, 1. For AImpSA, OSRA's direction to the Commission is to concentrate on status-based discrimination against shippers' associations or OTIs. AImpSA, 2–3. While NCBFAA is concerned about the possibility of collusive, discriminatory and anti-competitive behavior by carrier agreements, it recognizes that Congress intended to allow parties to service contracts to behave like private contract parties in a deregulated environment. NCBFAA, 1. NCBFAA, also, however, recognizes a need for the service contract regulations to be sufficient for Commission oversight in order to combat discriminatory practices such as those which have been carried out by the carriers in the past. NCBFAA, 1.

The opposition of some shipper parties, especially NVOCCs, to this provision is puzzling. Shippers should be willing to assist the Commission in its enforcement of the Act's prohibition on discrimination against them due to their status and refusals to deal because of shipper status. Indeed, the comments of shippers' associations (BSA, AISA, AImpSA) and OTIs (NCBFAA) urge the Commission to adopt strong regulations to protect against shipper status-based discrimination by carriers. This provision serves the simultaneous functions of giving shipper parties to contracts an additional reminder of the capacity in which they may act (*e.g.*, not as an ''agent,'' ''broker'' or ''freight forwarder'') while also decreasing the need for investigations which may unnecessarily burden shippers.

One commenter urges the Commission to establish a separate docket to address regulations to specifically guard against section 10 violations. AImpSA, 2–3. We decline, and point out that the regulations in all the areas that the Commission regulates were drafted with an eye toward our responsibilities in this regard. There is no need for another, separate rulemaking to address this issue at this point. The certification requirement has served the Commission well in the past and appears to continue to be a useful tool for monitoring without being an intrusion into commercial contract negotiations or an overly burdensome reporting requirement. Whether other regulations will be necessary will be a question better answered after the Commission has had some experience with and insight into the way the industry will develop in the new era of confidential service contracting.

BSA requests that the Commission give notice to the shipping public of the extent to which shippers' associations can rely on DOJ safe harbor guidelines for unaffiliated shippers entering joint contracts. BSA, 2–5. The Commission, in Docket 92–31, revised its definition of ''shippers' association'' and found that ''such associations between or among shippers will remain subject to anti-trust laws.'' 57 FR 49665, 49666 (Nov. 3, 1992). Presumably, therefore, shippers operating in informal groups would be similarly subject to the antitrust laws, and could rely on DOJ guidelines for their behavior.

APL complains that the proposed regulation's requirement that carriers identify NVOCC parties and determine that they are compliant is ''overkill.'' APL, 3. The provision, they complain, unreasonably delegates the policing of NVOCCs to ocean common carriers. APL, 3. APL offers that there are other effective and less burdensome ways of ensuring that NVOCC members of shippers' associations are compliant: For instance, requiring an association in the contract to warrant that any of its NVOCC members are compliant and providing evidence of such compliance. APL recommends that § 530.6(b) be deleted or redrafted by changing the word ''signing'' to ''implementing'' and deleting ''or an affiliate or member of a shippers' association''. APL, 3.

Section 530.6(b) as proposed was intended to ensure that carriers do not violate section 10(b)(11) of the Act, which forbids the knowing or willful acceptance of cargo for the account of unbonded or unlicensed NVOCCs. Similar to the benefit to shippers provided by § 530.6(a), § 530.6(b) also inures to the benefit of the carrier party, as certification of its belief that the NVOCC with whom it contracts is in compliance with Commission regulation may assist in establishing it did not act knowingly and/or willfully if later the Commission finds the NVOCC was not properly licensed or bonded.

Furthermore, the burden on the carrier signatory has been significantly reduced, as carriers will now have the ability to confirm an NVOCC's bond status by checking the Commission's website (*see*, 46 CFR 515.27(d)) and its license by reference to an NVOCC's letterhead, as required by 46 CFR 515.31(b). Finally, this provision does not appear to intrude into the negotiations between contract parties, as parties generally would already have a desire to either assert their status, or have good commercial reasons for avoiding entering into business arrangements with a non-compliant entity. Proposed § 530.6, entitled ''service contracts with NVOCCs'' was seen to be repetitive of the certification language of final § 530.6(b). That section is therefore deleted, and the remaining sections are renumbered. For the foregoing reasons, the provision is adopted as it appeared in the notice of proposed rulemaking, except that it is renumbered as § 530.6.

Section 530.7 Duty to Labor Organizations

The proposed regulation included a definition of ''reasonable period of time'' by which a carrier must respond to a labor organization's request. Section 530.7(a)(2). This definition was crafted with sensitivity toward labor organizations' interests in knowing about cargo that is due to arrive in port before it arrives, so that the movement of that cargo may be ''claimed'' as labor work.

However, labor interests contend that the definition is inadequate as it will not ensure a timely response, which they claim should be within 24 hours of receipt of request. ILA, 4. If the carrier is unable to respond, labor argues, the regulation should specify that it shall so state and explain. ILA, 4.

Carrier interests, on the other hand, object to any definition of the term, and assert that it should be determined on a case-by-case basis. OCWG, 21–22. Several argue that the Commission contravenes OSRA by defining the term at all. One maintains that implicit in the concept of ''reasonable'' is the phrase ''under the circumstances.'' APL, 3. If Congress had intended the term to be defined on anything other than a case-by-case basis, it would have defined the term itself in OSRA. APL, 3. It is arbitrary, they argue, for the Commission to fix a reasonable time for reporting. Furthermore, consideration should be given to the carrier's situation and reasonable ability to respond to the request. APL, 3; Sea-Land, 6. Sea-Land asserts that because the Commission determines what is reasonable for other matters (*e.g.*, Sections 6(g); 10(b)(8),(9),(10); 10(c)(8); and 10(d)(1)) on a case-by-case basis, it should do the same in this context. Sea-Land, 7.

The carriers argue that fixing a reasonable period of time is unfair because it gives the labor organization the exclusive control of the timetable in that it is labor who starts the clock with the request. APL, 3; Sea-Land, 6. Also, the comments urge, the requests might be repetitious or unclear, or the labor organization could inundate the carrier with hundreds of requests at a time in which it could not possibly respond in the time allotted by this definition. Sea-Land, 6.

One carrier comments that because service contracts run for terms of many months, no significant union work will be irrevocably lost if the information is not acted on within a matter of hours or days. APL, 3. This assertion is in direct contradiction to the emphatic comments by the ILWU and the ILA that time is most certainly of the essence in these matters. Another carrier is concerned that imposing a specific time limit may be inconsistent with obligations under collective bargaining agreements or labor laws. Sea-Land, 7.

It appears that the approach taken by the Commission in the proposed rule will achieve a workable compromise and protect both carrier and labor interests. But we note the objections of the carriers that the definition of ''reasonable period of time'' as two or four days would not appear to recognize that the reasonableness of any response may depend on the circumstances. Requests may, for example, be made in large batches, or at a time when a two or four day response is not reasonably achievable. It is also unknown at this time how often labor organizations will invoke these provisions, and how simple or burdensome it will be for the carriers to supply the appropriate response. To this end, the Commission amends the definition to include the word ''ordinarily.'' The definition provides the sense, at this pre-implementation stage, of what should normally constitute a reasonable, good faith response to a legitimate request. Any complaints of deviations from these standards resulting in harm to labor organizations would be adjudged in the context of the particular circumstances and the Commission's overall experience with this new provision of the statute.

The Commission is not persuaded by the arguments of the carriers that no definition of reasonable time is appropriate. OSRA is replete with general guidelines and standards for which the Commission is expected to supply more detailed qualifications of elements such as time and dollar amounts. Here, the amended rule provides only general guidelines of what the Commission expects will meet the general standard, in hopes that such guidance will help obviate the need for more formal complaints and procedures. As to the carrier concern that the time limit contravenes collective bargaining agreements or labor laws, it is impossible for the Commission to respond in a meaningful way, as it has no direct involvement in administering either.

Labor organizations criticize other provisions of this section as falling short of the mark. ILA, 1; ILWU, 1–2. They recommend that the Commission add a requirement that a response be adequate as well as timely. The required response, they argue, should include supporting documentation, such as bills of lading, delivery orders, and other non-privileged documents. This is a determination that the Commission must make on a case-by-case basis, as the text of the statute requires only that the response state ''whether'' the carrier is responsible. While one floor remark by Senator Hutchison alludes to the requirement that further documentation be produced,[4] it is unclear what the Commission's role in the disclosure of this information may be and therefore, the Commission declines to assume the authority to impose a requirement that particular documents be produced.

ILWU and ILA comments recommend that a particular Commission investigator be assigned in advance to all of the investigations which might arise out of complaints of non-compliance with this section. The ILWU suggests that the regulations include a requirement that requests for information be concurrently filed with the Commission to help avoid disputes over whether a given response was made within a reasonable period of time. ILWU, 5–6. Then, the ILWU suggests, the regulation should require that the Commission shall promptly solicit the carrier's written position on the complaint and conduct an administrative investigation on the merits of the complaint. The recommended procedure further includes the requirement that the Commission's investigator issue a report within thirty days, including findings to recommend a formal proceeding or dismissal and penalties. ILA, 5; ILWU, 1,2.

There is no requirement that such a procedure be contained in the regulations, and no indication from the legislative history of OSRA that it was the intent of Congress for the Commission to use any procedures other than its current complaint procedures to address violations of this section of the Act. An early version of the bill, which was to become OSRA, did include specific procedures which the Commission would undertake to enforce the responsiveness of ocean common carriers to labor requests for information. The April 3, 1998 version of S. 414 included a different version of section 8(c)(4) and included a section 8(c)(5), which read:

> (4) Disclosure of Certain Unpublished Terms.—A party to a collective-bargaining agreement may petition the Commission for the disclosure of any service contract terms not required to be published by paragraph (3) which that party considers to be in violation of that agreement. The petition shall include evidence demonstrating that
>
> (A) A specific ocean common carrier is a party to a collective-bargaining agreement with the petitioner;
>
> (B) The ocean common carrier may be violating the terms and conditions of that agreement; and
>
> (C) The alleged violation involves the moment [sic] of cargo subject to this Act.
>
> (5) Action By Commission.—The Commission, after reviewing a petition under paragraph (4), the evidence provided with the petition, and the filed service contracts of the carrier named in the petition, may disclose to the petitioner only such unpublished terms of that carrier's service contracts that the Commission reasonably believes may constitute a violation of the collective-bargaining agreement. The Commission may not disclose any unpublished service contract terms with respect to a collective-bargaining agreement term or condition determined by the Commission to be in violation of this Act.

Cong. Rec. S3194 (daily ed., April 3, 1998).

Between the version of April 3, 1998 and the bill as finally adopted by the Senate on April 21, 1998, this section underwent significant change. It is clear, therefore, that Congress specifically considered requiring the Commission's involvement in disclosing confidential carrier information to labor organizations. In the final analysis, Congress rejected such Commission involvement, and chose instead to minimize the role of the Commission in implementing the objectives of this section of the statute. The Commission indicated in the NPR that it ''expects that aggrieved labor organizations will use existing Commission processes in the event of noncompliance by a carrier. The Commission would entertain proposals for more specific and stringent rules if the existing standards and procedures prove inadequate in practice.'' 63 F.R. 71064. We are hopeful that labor organizations and carriers will

[4] ''Section 8(c)(4) envisions the release of information not necessarily contained in the service contract (and that provision) may require the use of documents other than the service contract.'' Cong. Rec. S3320 (daily ed., April 21, 1998)(Statement of Sen. Hutchison).

operate diligently and in good faith in exercising their rights and responsibilities in implementing this section of the Act. The Commission expects not to have to initiate programs or promulgate particularized procedures to ensure what should be the routine and noncontentious transmittal of information. We reiterate, however, that the Commission will revisit these issues if experience under the provision suggests such a need. Therefore, the proposed rule in § 530.7 will be finalized, except that the term ''ordinarily'' is added to the definition of ''reasonable period of time'' in § 530.7 (a)(2), and the placement of the provisions defining relevant terms have been re-organized for clarity.

Section 530.8 Filing Provisions

The proposed regulation requires service contracts to be filed in their entirety (except for signatures) in a system which would be modified from the current ATFI essential terms publication system. The proposed regulations make no provision for waiver, transition, or other filing options. As stated in the supplemental information to the proposed rule, the Commission proposed that, ''due to the volume of service contract filings * * * expect[ed] after May 1, 1999, adoption of an electronic, as opposed to paper-based, system appears to be the most practical approach.'' 63 F.R. at 71063. Further, the Commission noted that while the ''only viable approach to implementing an electronic system at this juncture would be to create a system adapted from the Commission's currently used filing system for Essential Terms of service contracts,'' it also sought comment on other ''approaches to establishing a new system * * * treating the proposed system as a transitional solution.'' *Id*. Furthermore, comment on continuing the paper filing of service contracts was specifically requested. *Id*.

The comments generally oppose the use of any modified ATFI system for filing, even as an optional system. Seaboard; CENSA; USCIB; NITL; AIFA; OCWG; P&O; Conagra; and Sea-Land. Several commenters assert that using ATFI (as modified) is inconsistent with the deregulatory thrust of OSRA, and the regulations should allow for filing by any electronic means which ''meet the OSRA objective.'' CENSA, 1–2; Sea-Land, 3; NITL, 5–8. Two comments assert that because Congress expressly rejected continuing ATFI for tariffs, it could not have intended to continue its use for service contract filing. NITL, 5–6; Sea-Land, 3.

NITL urges that the Commission, rather than ''clinging to an outmoded electronic system'' for filing common carrier tariffs, and imposing that system on a very different contracting environment, give up its reliance on ATFI in the face of systems for communication that are changing for the better on a daily basis. NITL 5–8. Sea-Land contends that the Commission's assertion that ATFI is the ''only viable approach'' is incorrect and that there are other viable approaches, as evidenced by other agencies which have adopted electronic filing systems using ''off the shelf'' software. Sea-Land, 3.

Generally, CMA and other commenters are concerned that the Appendix requirements are too detailed and would restrict the freedom of parties to negotiate terms. CMA, 2; NITL, 14–15; DuPont, 4. NITL urges the Commission to delete the Appendix entirely because it is completely unworkable, unnecessarily burdensome, very costly and because there is no statutory basis for its requirements. NITL, 14. Further, NITL is concerned that the risks of contract rejection, and its associated costs and penalties, are heightened by the inclusion of so many technical details. NITL, 14.

Two comments object to the regulation as proposed because it appears that it was designed for the administrative ease of the agency without regard to the convenience to the parties. NITL, 5–8; OCWG. 3–4. While electronic filing is the preferred long-term approach, OCWG comments that the proposal to use ATFI would impose substantial burdens on carriers. OCWG, 3–4. OCWG objects to using ATFI because, like CENSA, it believes that the proposal would require filers to create two documents: One for the commercial transaction, and another for FMC filing. CENSA, 1.

These concerns appear somewhat justified. While in the past filers have been required to file an ''essential terms publication'' in ATFI format, the Commission concludes that applying ATFI-like restrictions on the entirety of a filed service contract may not fully benefit both filers and the Commission. In the ATFI-based system, filers may be required to either re-format their commercial agreement or draft it in ATFI format in the first place, or the system may make it difficult for filers to provide the Commission with the true and complete terms of the contract.

On the other hand, several commenters support the draft regulation's proposal to modify and utilize ATFI. ETM; PTCB; AISA; and NCBFAA. Others accept the modification of ATFI provided that there is at least one alternative means of filing. JUSEFC; COSCO. JUSEFC finds the Commission's proposal to use ATFI ''logical.'' JUSEFC, 6. NCBFAA comments that the detailed filing requirements of the proposed regulation (and appendix A) are required if the Commission is to be able to police prohibited conduct. NCBFAA, 1. NCBFAA asserts that the industry will not be able to monitor for prohibited conduct because public essential terms will be limited. NCBFAA, 2. Furthermore, NCBFAA presents, as indication that this was the intent of Congress, that while OSRA specifically eliminates tariff filing, it also retains the requirement that service contracts be filed with the Commission. NCBFAA, 2.

Other commenters oppose any justification of the filing requirements based on section 10(b)(2) monitoring. NITL, 5–8. They suggest rather than imposing strict filing requirements, that the Commission determine whether carriers are providing service in accordance with the rates in their service contracts in the same way that shippers and carriers themselves will monitor each other's contract compliance, namely by consulting the terms of the contracts, and comparing those terms to the actual billed amounts. NITL, 5–8. Similarly, Sea-Land comments that the Commission's interest in oversight for unjust discrimination is limited to protecting ports, shippers' associations and OTIs due to their status and that carriers are relieved by the Act of any affirmative obligations towards shippers. Sea-Land, 5–6. It asserts that the Commission's enforcement of section 10 does not require continuation of ATFI in any form. Sea-Land, 5.

P&O complains that continuing the use of ATFI is not a secure option because it will require third party compilers and filers who will have access to confidential information. P&O, 3–4. BSA also worries that the proposal to ''grandfather'' previously approved software might not ensure confidentiality. BSA, 6. It requests clarification from the Commission on the ability of the proposed system to ensure rate confidentiality, and urges the use of new software and systems which would provide total assurance of confidentiality. BSA, 6–7. BSA recommends that the Commission draft specific regulations to address technical qualifications which software must meet to ensure and guarantee to shippers that service contract information will be confidential during filing, and that the Commission also draft regulations which include penalties for violating the security of the websites and

computer systems which contain service contract information (''hacking''). BSA, 8.

Similar to the preceding comments expressing concern for modernity and the ability to upgrade any system based on ATFI, BSA suggests that the Commission require that all common carrier websites are ''Y2K'' compliant. BSA, 6–7. As the internet is a communication line, and digital, this is not a concern for filing.

With regard to the registration requirements in the proposed regulation, PTCB urges the Commission to allow current ATFI registrants to maintain their current registrations and organization records without having to re-register. PTCB, 3. PTCB agrees that requiring batch filers to re-register for new log-ons and passwords is acceptable, but requests clarification that the organization number will remain the same, thus avoiding a requirement that filing services' clients amend their organizational records in order to re-authorize. PTCB, 4.

The Commission has directed its Office of Information Management (''OIRM'') to allow filers who intend to use either the internet-based system (discussed *infra*) or the dial-ups system to apply for registration and obtain log-on IDs and passwords prior to May 1, 1999 in order that they may be ready on May 1 for filing on that date. Organization numbers will remain the same in the service contract database. OIRM will notify via U.S. mail all presently-registered organization record holders to ensure that the individual will remain the same. If the ''org. holder'' will not be the same individual, a registration form will be included in the letter for the recipient to respond regarding who would ''own'' the organizational I.D. Any other log-ons will have to re-register.

Also, PTCB requests that the Commission continue, as is currently the case in ATFI, the method by which delegation of authority to file is done, namely by revising the organizational record. PTCB, 4. PTCB points out a deficiency in proposed Form FMC–83: It does not have a place to indicate delegation. PTCB, 4. Finally, PTCB requests that the Commission delete the requirement that individuals only (as opposed to organizations) are registered for filing because this unnecessary limitation is time-consuming and expensive. PTCB, 4.

The Commission must deny PTCB's request to allow log-on IDs and passwords to be granted to organizations, not individuals, due to security concerns and the requirements of the Computer Security Act. Therefore, the requirement that individuals, rather than organizations will be the registered filers will continue. Filing authority and delegation will be indicated on the Registration Form, FMC–83.

Four of the comments opposing the proposed regulation's adaptation of the ATFI system for service contract filings offer alternatives. Seaboard; OCWG; NITL; and P&O. Seaboard, OCWG, and P&O propose that the Commission allow filing in a generic word processing format as an attachment via electronic mail (''e-mail''). Seaboard, 1. OCWG suggests the Commission adopt a system based on commercially available software already in common use in the industry, but does not suggest precisely what that may be. OCWG, 4. NITL and OCWG offer generally that there are electronic alternatives to the proposed regulation which include filing via e-mail, internet, and diskettes. NITL, 7; OCWG, 8. OCWG proposes that the only technical requirements which would arise from using ''off-the-shelf'' software would be the assignment of user identification codes and security. OCWG, 4. Sea-Land recommends that filers be allowed to file their service contracts via the internet on a confidential site established by the Commission or via diskette, which apparently would be mailed to the Commission. Sea-Land, 4. They assert that this would be simple, flexible, inexpensive, complete, accessible and accurate and would fulfill all statutory requirements. Sea-Land, 4. Finally, while DuPont praises the Commission's desire to use modern electronic means, it recommends that the Commission approach the U.S. Customs Service to ascertain whether a joint system, or at least a compatible system, could be created to serve both agencies and their ''customers.'' DuPont, 5.

NITL recommends that the Commission revise proposed § 530.8(a) to read:

> Authorized persons pursuant to § 530.5 of this part shall file with the Commission electronically or in paper format a true and complete copy of every service contract before any cargo moves pursuant to that service contract. Service contracts filed electronically may be submitted via electronic mail, the internet, or on diskettes using software that is compatible with the Commission's computer systems.

NITL, 14–15.

P&O offers the most detailed suggestion. P&O suggests the Commission adopt an electronic filing system which allows the carrier/filer to send the entire text of the service contract via e-mail as an attachment to a Commission-designated e-mail address, which would be based on the filer's current organizational record. P&O, 2–3. Upon receipt of the service contract, P&O suggests, the Commission then open a directory for each carrier into which it downloads the service contract and therefore would be able to organize the information according to its own needs. P&O, 3. This information could be easily organized because all word-processing programs are searchable. P&O, 3. P&O analogizes the management of this system to the Commission's current maintenance of a list of filed agreements, which is done on a WordPerfect file. P&O, 3. Finally, P&O recommends that the Commission use passwords for confidentiality. P&O, 3.

Other Federal Agencies' Approaches

Several comments urge the Commission to follow the examples of other Federal government agencies in crafting its approach to electronic service contracts filing, namely the Federal Communication Commission (''FCC'') and the Surface Transportation Board (''STB''). NITL, 7; OCWG, 8. It appears that, after review of the approaches of these agencies, as well as that of the Federal Energy Regulatory Commission (''FERC''), the Commission is still faced with limitations of time and resources which might make the adoption of one of these systems inappropriate for the FMC.

1. Federal Communications Commission

Under the Telecommunications Act of 1996, the FCC receives tariff filings for its common carrier tariffs via its website. This process was developed over two years. The FCC requires that tariff publications be filed in both paper copy and on diskette, subject to various format requirements.[5] Filers must submit a cover letter on paper with the diskette and changes (amendments) to the tariff must be made by re-filing the entire tariff on a new diskette, with the changed material, and indicating the changes. The FCC also receives filing via its internet homepage. This filing system was designed and is managed by a private contractor.

2. Surface Transportation Board

One commenter suggested that because the STB ''requires the filing of pleadings and reports in electronic form, which permits those agencies to analyze filings electronically,'' that modifying ATFI is not the only feasible

[5] The diskette must be 3¼ inch, IBM-compatible form and use MS–DOS 5.0 and WordPerfect 5.1 software, in ''read-only'' mode, and labeled with the carrier's name, tariff number, and date of submission.

approach available to the Commission. NITL, 7. A review of the STB regulations on filing methods, however, indicates that the STB has not reached an electronic panacea for filing. For the filing of summaries of railroad contracts for the transportation of agricultural products, the STB requires that ''two copies of each contract summary'' be filed. 49 CFR 1313.4(a)(1). There does not appear to be an electronic option for this type of filing. For the filing of tariffs for the transportation of cargo by or with a water carrier in a noncontiguous domestic trade, the STB requires that ''tariffs shall be printed on paper not larger than 8½×11 inches.'' 49 CFR 1312.4(b). Filers for these tariffs do have the option of electronic filing; however, that option is accomplished through the FMC's ATFI system. 49 CFR 1312.17. Obviously, this option will be eliminated with the removal of the ATFI system, and there appears to be no contemplation by the STB for the implementation of a new method for receiving these filings electronically after ATFI is discarded.

The notice requirements, on the other hand, under STB regulations may be achieved electronically, but only where there is agreement between the parties. *See, e.g.,* 49 CFR § 1300.2(b); 1300.4(b); 1305.2(b),(c); 1305.3; and 1305.4(a),(b). These notice requirements are between carrier and shipper and are not official filings.

3. Federal Energy Regulatory Commission

While none of the comments referred to the approach of FERC, the Commission has investigated FERC's approach to the crafting of a viable electronic filing system. FERC issued a Notice of Inquiry on May 19, 1998 (Docket No. PL98–1–000, 63 FR 27529–27533) requesting comments on various issues which arise with the implementation of electronic filing, including formats, citations, signatures, methods of transmission, confidentiality, security, attestation and service. FERC held a conference on electronic filing on October 22, 1998. FERC has since taken a broader, agency-wide approach for completely re-engineering its methods for accepting filings and managing documents. For the present, the official copies of filed documents are still in paper form. FERC staff manually scans those documents which are not filed electronically (about 120,000 pages per month) but hopes to achieve a system which would provide for hyper-linking all public filings in a particular docket to the docket sheet so the user has the ability to select a document on the docket sheet list and go to the full text of the document immediately.

Due to the general response in opposition to adapting the ATFI filing system for service contract filings, the Commission will make available an option which will address most of the commenters' concerns that the proposed regulations would be too rigid, cumbersome and costly. Interactive internet filing of service contracts with the Commission will be provided, and while the dial-up system will be available, the Commission expects to phase it out as soon as possible, but certainly no later than the end of Fiscal Year 1999.

Specific details on internet-based filing will be made available on the Commission's website (http://www.fmc.gov) when final development and testing is complete. This option will provide for interactive internet filing of service contracts via the Commission's homepage. Individuals filing service contracts will presumably already have filed Form FMC–1, registering them as tariff publishers, and will have been assigned an organization number. Upon review, the Commission will provide prospective service contract filers with a user ID and password. A service contract filer will sign on to the Commission's website and provide its user ID and password. A screen will then indicate several options (e.g., filing a single contract, amendment or batches of contracts or amendments) in addition to detailed filing instructions. A single initial service contract will be filed by providing certain basic information such as a carrier contract number (which will enable linking of amendments to the initial contract), effective date, organization number, and the location of the service contract file which will be uploaded to the Commission upon activating the screen's ''submit'' button. Amendment filings will be done in the same manner, with the addition of a filer-provided service contract amendment number. Batch filings will require similar information for each contract, but will enable the filer to submit more than one contract per session. Finally, the Commission foresees assessing user fees at a later date, as the Commission gains experience and the details of the system are completed.

Therefore, § 530.8 and appendix A to this part, in which the options for filing are detailed, are accordingly revised to reflect the addition of internet-based filing.

Section 530.8 and Appendix A Transition Issues

Several commenters request that the Commission accept paper filings of service contracts as well as electronic filings for a transitional period. COSCO, 1–2; CMA, 3; JUSEFC, 5–7; OCWG, 6; P&O, 4; NITL, 7; DuPont, 5. OCWG recommends that such a transition period be at least one year. OCWG, 6 n.1. OCWG also asserts that there is no need to have a system in place on May 1, 1999. OCWG, 5. P&O also suggests that if the Commission needs more time to put an electronic system into place, it can receive paper filings. P&O, 4. Only BSA and the filing services (PTCB and ETM) support the immediate adoption of electronic-only filing. BSA, 5.

A satisfactory response to the commenters' general opposition to the modification of the Automated Tariff Filing Information (''ATFI'') system and their general support for electronic filing is achieved by the Commission's determination to offer an alternative filing method to the modified ATFI filing which is internet filing (herein referred to as ''internet-based'' or ''option 1''). This option offers filers great ease and flexibility, while allowing the Commission to receive the entirety of the contract information and to organize those filings for the Commission's monitoring and enforcement duties. Furthermore, most of the commenters' concerns about the rigidity and the cumbersome nature of the dial-up filing system are removed with the implementation of this filing method.

While most comments oppose any transitional system which does not include a paper option, the flexibility of the new system will make it extremely easy to file. Filers need only have created their contract on one of several word-processing systems and have access to the internet. It is not unreasonable to expect that carriers have access to this equipment, or that if they do not, they may choose to out source the filing. Removal of the requirement that they use a dial-up system appears to enable all carriers to do their own filing, if they wish to do so, thus removing any confidentiality concerns they expressed in the comments regarding the use of third party filing services.

The Commission intends to allow the filing of service contracts which have an effective date of May 1, 1999 or later in advance of May 1, 1999, as soon as filing systems are ready. The Commission contemplates that the systems could be ready in the week

prior to May 1, 1999. The Commission will issue further advisory notices of the status of the availability of the revised filing systems as information becomes available.

Again, due to the expense of maintaining the dial-up service, the Commission expects to phase it out as soon as possible, but certainly by the end of FY 1999. Finally, the Commission will request further industry input, if necessary, as it refines the internet-based system.

Section 530.8(c) and 530.12 Cross Referencing

Two comments generally voice support for the regulation allowing for the cross-referencing to tariffs and general rules filing as part of service contract register. BSA, 16; JUSEFC, 7. BSA recommends that the Commission make available on its FMC website the general rules tariff of any carrier or conference and periodically inspect that tariff to determine that changes made by amendments have been made, and thereby ensure that the shipping public will be able to obtain necessary information regarding applicable items (e.g. rules for hazardous cargo). BSA, 16.

P&O comments that the proposed regulation's prohibition against cross-referencing has no support in OSRA and no reasonable regulatory purpose, and that as such it should be withdrawn and the regulations should allow cross-referencing to a carrier's own tariff as well as its conference tariffs. P&O, 8. NITL and OCWG, as a means to allow greater commercial flexibility, both support revision of § 530.8(c)(2) to allow cross-referencing not only to tariffs but also to ''widely available public information.'' OCWG, 19; NITL, 13. OCWG recommends that the Commission add to § 530.8(c)(2) the phrase, ''or unless those terms are available in a regularly published and readily available public source commonly known in the industry.'' OCWG, 18–19. NITL also believes that this change will ensure that the Commission could obtain all of the contract's terms. NITL, 13.

The Commission, in an effort to make filing less burdensome for carriers, but while ensuring that it had the entire contents of, or access to, the service contract terms, proposed that carriers may ''cross-reference'' their own tariff publications or their conference tariff publications in their filed service contracts. This provision was intended to allow carriers to refer to rules of general applicability (free time and demurrage, bunkering rates, currency matters, etc.) for the ''boilerplate'' or terms which appear in all their contracts. Further, the Commission recognized that it was Congress' intent, by lifting the requirement that tariffs be filed with the Commission, to allow parties to service contracts more freedom and flexibility in their commercial arrangements. For those reasons, the proposed rule, originally numbered § 530.9(c)(2), was drafted to permit filed service contracts to refer to terms outside the four corners of the filed service contract, but only if they are contained in the carrier's or conference's tariff publication. P&O appears to have misread the proposed rules as not allowing any cross-referencing whatsoever. This was not the intent of the proposed rules. Rather, the regulation would have allowed cross-referencing, but only to matter contained in a published tariff of the carrier or conference of which it was a member.

However, in response to comments that allowing cross-referencing only to published tariff matter would unduly stifle the parties' contract terms, the Commission has decided to allow cross-reference to a ''publication widely available to the public and well known within the industry.'' § 530.8(c)(2). The Commission wishes to stress, however, that exact terms of the contract must be determinable and certain, in keeping with the requirements of the Act. In response to a comment by COSCO that this approach would undermine the confidentiality of the contract terms, we point out that any term, except of course published essential terms, can be kept confidential by inclusion in a general rules filing or by filing in the text of the contract itself. The Commission is confident that this approach will satisfy both the concerns of filers for confidentiality, and the requirement that the complete contract be filed.

Section 530.8(b)(9) Naming Affiliates

AISA believes that proposed § 530.8(b)(9) should be amended to remove the requirement that shippers' associations name all of their members. They assert that this requirement is not mandated by any change made by OSRA and is contrary to current Commission regulation and policy which requires only such naming if the contract specifically excludes or includes specific members. AISA, 7. AISA is concerned that such disclosure would give carriers blackmail potential, as was found in Fact Finding 15, and Docket 91–1. AISA, 8.

AISA suggests the provision be revised to read as follows:

(9) The legal names and business addresses of the contract parties; the legal names of affiliates entitled to access the contract, except that in the case of a contract entered into by a shippers' association, individual members need not be named unless the contract includes or excludes specific members; the names, titles and addresses of the representatives signing the contract for the parties; and the date upon which the service contract was signed. An agreement service contract must identify the FMC Agreement Number(s) under which the service contract is filed. Carriers, conferences, and/or agreements which enter into contracts that include affiliates must in each instance either: (further unchanged). AISA, 10.

CMA and NITL agree that reporting all names and addresses of shippers would be unnecessarily burdensome. CMA, 2; NITL, 12–13. NITL questions the purpose of this requirement. NITL, 12. If the Commission has a question about identity or location of a particular affiliate, NITL suggests that it obtain the information informally, on a case-by-case basis. Therefore, NITL argues, this requirement should be either deleted or the production period of 10 days should be increased. NITL, 12.

The deletion of the exception for shippers' associations being required to list all members in a service contract was a drafting oversight. We therefore re-insert the exception. However, the production period of 10 days was fully explored when the currently effective rule was put into place and this will be unchanged. OSRA makes no changes which would have an impact on this requirement.

APL complains that proposed § 530.8(b)(9)(ii) (identifying affiliates) is unintelligible, as it is unclear to whom the certification information must be provided. APL, 4. Further, it asserts that the last two sentences of the paragraph seem to be unrelated to clause 9(ii), and requests clarification of the regulation. APL, 4.

Section 530.8(b)(9) as proposed reads, (the filed contract or amendment shall include)

(9) the legal names and business addresses of the contract parties; the legal names of affiliates entitled to access the contract; the names, titles and addresses of the representatives signing the contract for the parties; and the date upon which the service contract was signed. An agreement service contract must identify the FMC Agreement Number(s) under which the service contract is filed. Carriers, conferences and/or agreements which enter into contracts that include affiliates must in each instance either:

(i) list the affiliates' business addresses; or

(ii) certify that this information will be provided to the Commission upon request within ten (10) business days of such request. However, the requirements of this section do not apply to amendments to contracts that have been filed in accordance with the

requirements of this section unless the amendment adds new parties or affiliates. Subsequent references in the contract to the contract parties shall be consistent with the first reference (e.g., (exact name), ''carrier,'' ''shipper,'' or ''association,'' etc.);

The Commission has re-drafted this provision for clarity, and these alterations should sufficiently address the reasonable concerns of the commenters.

Appendix A General Rules Filings

COSCO and JUSEFC comment that allowing filers to make general rules filings or register filings is beneficial and will allow carriers to avoid repetitious filing. COSCO, 1; JUSEFC, 7. COSCO urges that publishing general rules in a tariff would be unacceptable because of the confidentiality issues and, further are concerned that such publication would require a thirty-day delay for the implementation of such rules. COSCO, 1.

ETM is concerned that the proposed regulations are unclear as to whether the Commission would allow for multiple service contract registers, and whether the registers are to be based on strict location group application or if overlapping scopes are allowed. ETM 2–3. Both ETM and PTCB foresee future problems if the Commission intends for the registers to be unique, such as by location group, without conflicting scopes or overlapping of scopes and does not allow different and overlapping scopes between registers. These problems may include amendment numbering, effective dates and contract terms. ETM 2–3; PTCB, 9.

Other comments disfavor allowing service contract registers as being unnecessary, burdensome and without meaningful regulatory purpose. P&O, 7. P&O further comments that using a service contract register for general rules filing seems contrary to the continued requirement to publish essential terms where carriers have traditionally published, and they assume would continue to publish, their ''boilerplate.'' P&O, 7.

The provision for a ''general rules'' filing is somewhat complicated by the fact that there may be two electronic filing systems in place. However, the Commission allowance of more liberal cross-referencing as well as a filing system which would accept the full text of the document in a word processing format (i.e., the same as the document signed by the parties), this should relieve any burden on filers to file with the Commission anything other than the commercially agreed upon service contract, and should be adequate for the Commission to determine the terms of the contract with precision.

Other Term Requirements

Many of the system requirements and restrictions opposed in the comments diminish, if not completely disappear, with the addition of the option for a web-based filing system. First, PTCB's concern that ATFI will not accept port ranges disappears when filers file the full and original text of their contract on-line. PTCB, 5. The Commission has revised the regulations relating to the ATFI-based system to allow the filed matter+ to reflect the true agreement of the parties, to the maximum extent possible, given some inherent technical limitations of that system.

The same is true for location and commodity descriptions: There would be no need to require NIMA or WPI locations, or to use the Harmonized Schedule for commodity descriptions in a ''free text'' system. OCWG, 21; P&O, 8; NITL, 11; Conagra, 4. The Commission agrees that this unduly limited the parties in contracting and might cause confusion, and so has removed references to the US HTS, NIMA and WPI in the interim final rule.

For duration requirements, however, the Commission will continue to require service contracts to have specific effective and expiration dates. P&O, 7; NITL, 12. This is required by the statutory definition, that a service contract be ''a commitment * * * over a fixed time period.'' Section 2(19) of the Act. *See* below, discussion on amendments for renewal of service contracts.

System requirements may also dictate the Commission's ability to allow filers to have access to their filed contracts for reviewing and auditing. PTCB, 3. At first blush, this may create confidentiality/security issues which are, at present, unforeseen. While the new system may give the filer the ability to review (on a read-only basis) its filings, the contents of a filed service contract may only be changed through a subsequent filed amendment or correction.

Finally, the Commission will make the addition of a provision which requires agreement-authorized service contracts to include the filed agreement number, § 530.8(d)(3), and a provision for filers to inform the Commission where the statement of essential terms will be filed, § 530.8(d)(4). For the reasons described above, the proposed regulation is revised to add the alternative system, remove unnecessary requirements and further simplify the filing procedures.

Section 530.9 Notices

Proposed § 530.9 (as renumbered) requires the carrier party to a service contract to notify the Commission within 10 days of the occurrence of certain events which affect the service contract. Those events include: Correction ((a)(1)); cancellation ((a)(2)); termination not covered by the contract ((a)(3)); adjustment of accounts (by re-rating, liquidated damages, or otherwise under § 530.16)((a)(4)); final settlement of any account adjusted as described in § 530.16 ((a)(5)); and any changes to the name of a basic contract party or the list of affiliates, including changes to legal names and business addresses, of any contract party entitled to receive or authorized to offer services under the contract ((a)(6)).

Commenters suggest that there is no need for the Commission to receive notice of matters which are affected by amendment of the service contract because such amendments are filed with the Commission. NITL, 15. They suggest that the events which are enumerated in the proposed regulation are events that would require such amendment.

CMA and NITL believe that requiring changes to be reported within ten days is overly burdensome. CMA, 2. NITL suggests that if the proposal is not completely deleted, the time period should be lengthened to ninety days. NITL, 15–17. In the original regulation, found at § 514.7(g)(2), notices were required to inform the Commission within thirty days of such events, and that period of time was based on the commercial practice for settlements of accounts.

The proposed rules reduced the time in which notification must be made from thirty to ten days based on an understanding that this would be in line with the speed at which these transactions now occur and that, therefore, no additional burden would be created for regulated entities. However, due to the commentary to the contrary, the Commission has decided to simply revert to the former requirement of thirty days.

NITL and DuPont comment that the requirements cover too many events, and are overly broad. DuPont asserts that such notices should only be required to be reported when events occur which affect the essential terms of the service contract. DuPont, 2. The proposed regulation would give the Commission power to limit, restrict and dictate the content of changes to service contracts. DuPont, 2.

Contrary to these assertions, the Commission will continue to require that all changes to a filed service

contract must be filed with the Commission, not only those which effect the essential terms. The Commission must monitor the operation of service contracts for acts prohibited by the statute and simply cannot fulfill this duty if it is not guaranteed of having all the terms of service contracts within its jurisdiction.

The comments suggest the proposed regulation be altered to permit periodic reporting, perhaps on a semi-annual basis in a prescribed format (but not one which would restrict the parties right to mutually alter, modify or terminate) of routine changes which effect essential terms. DuPont, 2,3. CMA suggests this approach for changes to shipper affiliates only. CMA, 2.

Proposed § 530.9 (as renumbered) was adapted from original § 581.5(b) (52 FR at 23939, 23999), which the Commission asserted was

> necessary to enable the Commission to perform its contract surveillance role and ensure the terms of contracts are met. The notice requirements should not be burdensome since such information is exchanged in the normal course of business by the contract parties. Compliance with the notice requirement can be met merely by providing the Commission with a copy of whatever documents are exchanged between the parties under such circumstances.

The Commission continues to have such a surveillance role, which is made more important by the fact that service contracts will not be publicly available. Furthermore, the Commission particularly reminds filers that any changes to the public essential terms must be updated in the essential terms publication, regardless of such notification to the Commission. *See* § 530.12 (publication).

NITL is correct not only that the Commission ''would like'' to receive notice, but that it must receive notice of changes in service contracts in order that it have the complete terms of the contract which are in effect, and to be aware that a certain filed contract is no longer in effect. NITL, 15. Also, NITL argues that corrections should be handled through amendments. NITL, 15–17. If the filer uses the modified ATFI, the filer will receive a special case number with which it will make its own corrections. As the Commission itself does not enter the corrections into the system, the Commission must know when that is done. The introduction of an alternate system filing may or may not have the capability of alerting the Commission when a correction is made, so while there may be no need for notice, the Commission will continue to require it at this point. *See,* discussion regarding correction, § 530.10.

As cancellations (§ 530.10(a)(2)) are necessarily only those not anticipated by the terms of the contract, there is a clear need for the Commission to have notice of that event. If the termination has occurred as anticipated by the service contract, we agree, in accordance with the rationale above, that there is no need for additional notice to the Commission. If, however, an event has occurred which was not contemplated by the parties in the service contract but which affects its operation, the Commission must be so notified in order to assess whether the parties are employing an unjust device to obtain rates otherwise not applicable. Similarly, for terminations not covered by the contract (§ 530.10(a)(3)), the parties will no longer have the right to use the rates in the service contract and there are section 10(a)(1) concerns.

Several commenters assert that the notification requirements of §§ 530.10 (a)(4), (a)(5) and (b) for account adjustments are unnecessary and arbitrary, intrude into the commercial relationship, create needless burdens and are outside the Commission's oversight functions. OCWG, 20; Conagra, 4–5; NITL, 15–17. Notice of account adjustments and final settlement which are made pursuant to the terms of the service contract filed with the Commission appear to have no legitimate basis. NITL, 16. They appear to stem from prior ''me-too'' requirements. NITL, 16.

Again, and contrary to the comments, however, the Commission must know what the adjustments or final settlements of an account may be, not to impose the rate differential on the carrier or shipper, but to ensure that no section 10 violations are being carried out. There is little burden on the filers in providing this information, as they may simply copy the information to the Commission as they send it to the shipper.

Similarly, for final settlement of any account adjusted, the Commission requires notice. Both of these notice requirements were ''intended to apply to only those service contracts where there has been a change to the basic compensation required by the terms of the service contract.'' 52 FR at 23999. The applicable rate must be determinable at any given time, to ensure compliance with the Act and section 10(a)(1). Therefore, while parties are free to provide for liquidated damages, contingencies, etc., in their service contracts, using a rate from a service contract which is not lawful under the Act would create section 10(a)(1) and possibly other violations.

NITL comments that changes to names of parties (requirement of which is discussed *supra*) should be handled through amendments, and that additional notice of these should therefore not be required. NITL 15–17. NCBFAA and CMA suggest that there is no need to notify the Commission of changes to lists of shipper affiliates as required in § 530.9(a)(6)(ii). NCBFAA, 2; CMA, 2. Furthermore, this is too burdensome to shippers. NCBFAA, 2; CMA, 2. DuPont recommends that § 530.9(a)(6)(ii) be altered to eliminate the requirement to report all names and addresses of shippers (except NVOCC) because identity of shippers is not an essential term, is not reported to the public and could be required to be maintained in the records of the carrier, records which can be obtained by the FMC through subpoena power. DuPont, 2–3.

Notice to the Commission of changes to shipper parties arises from the same concerns the Commission has when any other term of the filed service contract changes. The Commission must have the ability at any time to examine the filed service contract and assess whether or not parties (or non-parties) are operating in conformity to the service contract, or whether they may be employing an unjust means or device to elude the requirements of the Act. The Commission must be able to ascertain at any given moment who has the right to access a service contract.

Furthermore, there appears to be no reason at this juncture for the Commission to consider whether periodic reporting of changes to who may have access to a service contract (affiliates) would be adequate to meet its responsibilities. No change to OSRA mandates such a change, and the regulation was carried over from prior Commission regulation found at 46 CFR 514.7(g)(2).

OCWG complains that proposed § 530.9(b) (notice to contract party) fails to acknowledge commercial realities, including the sometimes protracted negotiations and communications delays relating to the covered subject matter and, further, that carriers and shippers have both regulatory and commercial incentives to promptly pursue their contract rights. Thus, they argue, there is no reason to graft further deadlines onto the commercial relationship. OCWG, 20–21.

Originally, this provision was crafted with respect to the general commercial practice of settling accounts in thirty days; additional time was provided, and the regulation as adopted required notice to the shipper party of the final settlement of account within 60 days of

the termination of the contract. 52 FR 23999.

OSRA shifts parties' remedies to their common law contract rights, and as such, this provision appears to be no longer necessary, as it was originally intended to protect the shipper party. With the deregulatory goals of OSRA, parties are expected to protect their own contract rights and as such the Commission's role as mediator between the parties for contract disputes is removed. Accordingly, § 530.10(b)(as originally numbered) is deleted completely.

Section 530.10 Amendment, Correction and Cancellation

The proposed regulation provides that either party to a filed service contract may request permission to correct clerical or administrative errors in a filed service contract by filing a request with the Commission's Office of the Secretary within 45 days of the contract's filing with the Commission, for a fee of $233 pursuant to § 530.11(c)(4). Any notices in connection with the filing of such corrections would be filed with the Commission under § 530.9 within 10 days. Amendments are intended by the rule as proposed to be filed in the same manner as initial service contracts. Finally, cancellation of the service contract is provided for by this section.

COSCO requests clarification about what rules, and specifically whether confidentiality, will apply to service contract amendments filed after May 1, 1999, where the original service contract was filed before May 1, 1999. COSCO, 2.

Amendments filed on or after May 1, 1999 to service contracts filed before May 1, 1999 must comply with the regulations in effect as of May 1, 1999. The Commission expects that many parties to service contracts entered into before May 1, 1999 may wish to obtain confidentiality for more of their service contract terms under OSRA, and therefore will terminate the contracts, write new ones and file them in their entirety rather than simply making amendments. As we previously indicated, the Commission will strive to have the filing systems ready to accept service contracts in the week prior to May 1, 1999 and thereby allow the filing of service contracts which have an effective date of May 1, 1999 or later as soon as possible.

Two commenters believe that requiring a formal correction proceeding and justification for correcting clerical errors of proposed § 530.10(b) incorrectly carries over provisions from the previous regulations on ''me-too,'' which has been eliminated by OSRA. CMA, 2; DuPont, 3. It appears that confusion has arisen among the commenters regarding the differences between the terms ''correction'' and ''amendment'' to a service contract filed with the Commission under the Act. Parties to a filed service contract are free to amend its terms prospectively at any time, by filing their amendments pursuant to § 530.8. Meanwhile, the ability to correct clerical or administrative errors retroactively helps contract parties avoid undue hardships in instances where the parties discover, subsequent to filing a contract with the Commission, that a clerical or an administrative error had been made.

There is utility to having in place a procedure by which the parties may correct inadvertent errors through the correction procedure. However, this procedure must be structured so as to enable the Commission to distinguish between legitimate requests and requests crafted to avoid the statutory requirements of the Act, regardless of the fact that me-too rights have been eliminated by OSRA. The ability to change provisions retroactively without Commission scrutiny would undermine the clear intent of section 10(b)(2)(A) which provides that no common carrier, either alone or in conjunction with any other person, directly or indirectly may provide service in the liner trade that is not in accordance with the rates, charges, classifications, rules, and practices contained in a tariff published or a service contract entered into under section 8 of OSRA.

Furthermore, allowing parties to ''correct'' retroactively terms of the filed service contract would make any such agreement illusory and thereby bring it outside the requirements contained in section 2(19) of the Act that a service contract be certain and contain commitments on the parts of both parties. It appears that allowing for corrections (retroactive) and amendments (prospective) to filed service contracts provides more than adequate flexibility for parties to take advantage of their commercially negotiated arrangements while ensuring adherence to the Act's requirements.

CMA asserts that the Commission has no authority to accept or reject a contract change, as it is a matter for the parties. CMA, 2; DuPont, 3. NITL believes it is nonsensical to require permission to correct a clerical error. NITL, 17. We disagree. The authority for the Commission to scrutinize a retroactive change to a service contract is based on the requirement of section 8(c) of the Act that service contracts be filed with the Commission and that they reflect certain, meaningful commitments. Thus, allowing parties to make retroactive corrections devoid of any review or oversight would render that statutory requirement meaningless.

CMA argues that there should be no distinction between changes that are made prospectively (amendments) and changes that are made retrospectively (corrections). CMA, 2. Again, we disagree, and point out that the Commission has made such a distinction: the terms of corrections, but not those of amendments, are subject to Commission review before they may be made.

Two commenters complain that the correction procedure is excessively burdensome. NITL, 15; NCBFAA, 2. Further, NITL argues, the fee for corrections is too high. NITL, 17. The service fee associated with such requests became effective November 2, 1998, and reflects the costs incurred by the Commission in providing this service to the parties which elect to use it. Correction requires a significant amount of work by Commission staff, because the request must be scrutinized to ensure it is not an attempt to circumvent the requirements of the Act. Again, the need for notice of correction (*see* § 530.9(a)) will depend on the capabilities of the filing system.

PTCB comments that filers should have access to their filings to check them for errors and to audit them. PTCB, 1. The read-only access to filings may be possible, but certainly filers will have no ability to change their filings (except by amendment) once submitted to the Commission's database for the reasons set forth above.

NITL comments that the 45-day period by which filers must report clerical and administrative errors is too short. NITL, 17. This deadline, however, has been a longstanding requirement of the regulations and the Commission is unaware of complaints of hardship in the past. Furthermore, given the recent advances in communication technologies, 45 days would be more than adequate time for parties to detect clerical errors in their service contracts. Also, the requirement that such request be filed within a 45-day period for a service fee encourages contract parties to carefully review contracts before submitting them to the Commission and to take corrective action without undue delay. Finally, the Commission has previously fully assessed the time period required for requesting a correction, and it is not apparent why this analysis would have changed. Docket No. 88–61, 54 FR 1363 (Jan. 13, 1989).

The correction procedure set forth under § 530.10 will serve a useful purpose and will be maintained. Experience has shown that there will likely be only a minimal need to file such requests: during FY 1998, only four such requests were filed with the Commission and this number is not anticipated to increase significantly in the future, particularly given the Commission's determination to encourage contract parties to file their actual arrangements rather than arrangements ''translated'' into FMC formats.

Commenters complain that § 530.10(c)(2)(cancellation) is anachronistic and urge the Commission to delete the provision. One commenter complains that these provisions are inconsistent with general principles of contract law and would penalize shippers in situations where both the shipper and the carrier believe the termination is in their self-interest, and as such is not appropriate in a marketplace oriented system, such as the one OSRA contemplates. AImpSA, 1–2. NCBFAA complains that the proposed rule is burdensome and inappropriately harms shippers when the carrier may not have suffered any damages due to unilateral cancellation of a service contract. NCBFAA 3,4. NCBFAA also complains that it is unfairly punitive to re-rate at tariff rates when a shipper cancels a service contract. NCBFAA, 3,4.

The Commission has concluded to redraft this section to reflect the very limited situations in which re-rating will be required. First, we point out that the rejection provision has been eliminated. Second, re-rating, as discussed below, will only be required in situations where a filed service contract has not contemplated and which the parties have not determined to amend the contract. If there is a liquidated damages, or another fall-back rate provision, there will be no need to re-rate cargo which has already been carried. Therefore, most of the shippers' concerns that they may be held unreasonably accountable for a carrier-filer's filing mistakes are removed.

The Commission first added the allowance that parties prospectively may amend their filed service contracts in Docket 92–21, 57 FR 46318 (Oct. 8, 1992). There, the Commission noted that the parties may make retroactive corrections of clerical or administrative errors through the corrections procedure. *Id.* at 46318. Second, the Commission noted, the parties can similarly provide for substantive modifications through contingency clauses. As pointed out below, examples of such contingency clauses had been listed in § 514.17 (d)(7)(viii).[6] As further discussed in the supplemental information to this regulation, any of the terms of the service contract may be amended with prospective effect. 57 FR at 46322.

The terms amendment, correction and cancellation are clarified by the revised section. It is apparent that commenters are confused about the reasoning behind the distinction the Commission has made in the past. Further, we point out that the Commission's Bureau of Tariffs, Certification and Licensing (''BTCL'') received only four petitions for correction last year. This is simply an issue which has not been a problem in the past, but which the Commission will continue to monitor against the abuse of procedures such as correction to evade the prescriptions and prohibitions of the Act.

Therefore, due to the apparent confusion of the comments over the distinction between the terms correction, amendment, and cancellation the proposed regulations are revised to include definitions of these terms.

Section 530.12 Publication of Essential Terms

OSRA continues to require the publication of certain essential terms of service contracts and instructs carrier parties to service contracts to make these essential terms available to the public ''in tariff format.'' Section 530.12 of the proposed regulation suggested that carriers and conferences should be able to satisfy this obligation in the same way they publish their tariff information under proposed 46 CFR part 520. Further, in an effort to assist the shipping public to find statements of essential terms published according to this part, the Commission proposed making a list of the locations of all such publications available on the FMC website. 46 CFR 530.12(f).

OCWG comments that the proposed regulation's requirement that essential terms be published with the tariffs is misplaced because that is just format, not location. OCWG, 18. The proposed rule cross-referenced many of the technical requirements of the newly proposed tariff publication regulations to effectuate the essential terms publication required under this part, in an effort to ease the burden on carriers, and to allow them to take advantage of means by which they would already publish their tariff information. The Carrier Automated Tariff regulation, Commission Docket No. 98–29, gives carriers a wide array of options regarding the location at and method by which they publish. Therefore, requiring carriers to publish statements of essential terms alongside their tariffs would not create any new burdens. Indeed, requiring that a different location be used would appear to be much more burdensome, as it would not allow carriers to take advantage of publications they must already make in accordance with the tariff regulations.

However, the Commission is again faced with issues which arise when a service contract is entered by members of a non-conference agreement which does not publish a common tariff with which its service contract essential terms may be published. One commenter supports the proposal that individual service contracts are published by the individual, and that multiparty service contracts are filed by one party, but published by all the parties. P&O, 8. However, the comments request that the Commission clarify that for individual service contracts, essential terms would be published on the carrier's own essential terms publication and not on a conference's essential terms publication. P&O, 8. We agree that this remains the simplest approach.

Individual carrier service contracts are to be published alongside that carrier's tariff matter, in a separate document, as outlined in § 530.12. Multi-party service contracts entered into under the authority of a conference must be published alongside the conference tariff, and not in the individual member's tariff.

For service contracts jointly entered into by multiple parties of a non-conference agreement, the publication of the statement of essential terms will be published as for individual service contracts, but note must be made of the

[6] That section read, in pertinent part, Later events causing deviation from ET (if any); Where a contract clause provides that there can be a deviation from an original essential term of a service contract, based upon any stated event occurring subsequent to the execution of the contract (this term) shall include a clear and specific description of the event, the existence or occurrence of which shall be readily verifiable and objectively measurable. This requirement applies, inter alia, to the following types of situations:

(A) Retroactive rate adjustments based upon experienced costs;

(B) Reductions in the quantity of cargo or amount of revenues required under the contract;

(C) Failure to meet a volume requirement during the contract duration, in which case the contract shall set forth a rate, charge, or rate basis which will be applied;

(D) Options for renewal or extension of the contract duration without any change in the contract rate or rate schedule;

(E) Discontinuance of the contract;

(F) Assignment of the contract; (or]

(G) Any other deviation from any original essential term of the contract.

relevant FMC-designated Agreement number. Commenters assert that, by requiring a list of fellow carrier participants, the proposed regulation was adding a non-statutory public essential term: the names of the carrier parties. With that in mind, together with the limitations which exist as to tariff-associated statements of essential terms publication, reference to the agreement number will allow the public to ascertain whether certain activity is joint or independent. This approach, while it does not provide the public with a list of which member is or is not participating in an agreement-authorized multi-party service contract, will indicate that the service contract is not an independent, sole-carrier service contract.

One commenter suggested that rather than require all individual carriers to publish the full text of their non-conference agreement contract statements of essential terms, simply a reference to where the published essential terms may be found would be adequate and less burdensome to carriers. COSCO, 2. Due to the automated nature and the limited terms which are required to be published in a statement of essential terms under OSRA, the burden appears to be rather light on carriers, in comparison to the benefits it provides the shipping public.

P&O further requests that the Commission clarify the different publication requirements for non-conference agreement multi-party service contracts, conference agreement multi-party service contracts where the conference is the signatory but not all members are participants, and conference agreement multi-party service contracts where the carriers themselves are the signatories. P&O, 8. We agree that for statements of essential terms, because the terms are public in contrast to the balance of the filed matters, there is no corresponding issue of confidentiality. The clarification in § 530.12 will indicate that service contracts which are entered jointly by members of conferences, regardless of signatory, must be published with the conference's tariff and not in the individual carrier's publication. For an independent service contract, the statement of essential terms will be published with the individual carrier's tariff publication, but not with the conference's tariff. Allowing such would lead to public confusion.

ETM requests that the Commission provide further clarification regarding the failure to make published essential terms contemporaneously available. ETM, 1. We reiterate that such liability would rest on the carrier parties to a service contract under the Commission's jurisdiction, regardless of the appointed agent for publishing.

Section 530.13 Exceptions

One commenter asks the Commission to clarify in supplementary statements that service contracts which are limited to the carriage of used military household goods and personal effects, or shipments of used household goods and personal effects of civilian executive agencies tendered to OTIs under the International Household goods program, administered by GSA, or both, are *required* to be filed with the Commission. HGFAA, 3. The exemption for used military household goods, granted by the Commission under section 16 of the Act, exempts those services from the tariff filing requirement only. The language in the rule as revised should remove any confusion.

The inclusion of the phrase, ''as those terms are defined in section 3 of the Act'' appears to adequately address any concerns regarding the definitions for exempted commodities. The one exception to this is for the term ''motor vehicle'' which is not defined by the Act. Therefore, the addition of that term to the definitions, § 530.3, which mirrors the terms definition in the Commission's regulation on Carrier Automated Tariffs Systems (Docket 98–29) will adequately address such concern. It does not appear necessary to further repeat other definitions here.

The proposed regulations also provided for ''non-acceptance,'' a new term reflecting the congressional mandate that the Commission not accept for filing service contracts which cover only excepted commodities. It appears now that this was a confusing new term. The term ''non-acceptance'' has been removed from the regulation, and the provisions in this section should otherwise adequately address ''mixed'' contracts.

The Commission will retain the provision requiring any service contracts which are filed to relate to commodities or services for which a tariff rate can be established. This is because the situation may arise in which the Commission would require re-rating, and for such re-rating, an ''otherwise applicable rate'' would be required. While such need may be very rare, those concerns remain for replacement applicable rates for such situations.

Finally, issues arise similar to those discussed under the sections on rejection and re-rating. For the reasons discussed, mixed commodity contracts may only be filed if a replacement rate is available. We therefore revise the proposed regulations to clarify this approach. Finally, as it was repetitious, § 530.15, as originally numbered in the proposed regulation, entitled ''non-acceptance'' is deleted entirely, and the following sections have been accordingly renumbered.

Proposed § 530.15—Rejection

Several comments remark on the Commission's authority and criteria it would use for rejection of service contracts as presented in proposed § 530.15. Commenters generally argue that the Commission may only reject service contracts submitted for filing if they do not meet the requirements of the Act, but that the Commission does not have the authority to reject them on the basis that they do not meet the requirements of the Commission's regulations. OCWG, 19–20; CENSA, 3; P&O, 6; NITL, 19. IBP urges the Commission to revise the regulation, and to provide more guidance on when a service contract could be rejected and suggests that rather than a general reference to the Act, this section refer to the requirements in § 530.8 (as renumbered). IBP, 1. Finally, P&O complains that the Commission is wrongfully attempting to intrude on the commercial nature of service contracts through rejection. P&O, 6.

Commission regulations currently outline the procedures for rejection of service contracts and essential terms filed with the Commission. 46 CFR 514.7(j). The Commission rejects service contract essential terms publications filed into the ATFI system which do not conform to the requirements of the Act or Commission regulation, including timeliness of filing and adequacy and accuracy of the publication of the statement of essential terms. The proposed regulation attempted to adapt the current rejection rules as necessary to meet the changes to the Act made by OSRA.

JUSEFC recommends the re-insertion of § 514.7(j)(2) which specifies that rejection is limited to those instances where parties fail to file a corrected copy. JUSEFC, 8–9. The filer, they comment, should be given a chance to cure even if the deficiencies are major, and a notice of intent to reject be sent to the shipper party, because the sanction of re-rating is too harsh on the shipper who relies on the carrier party to do the filing. IBP, 2. This argument is considerably diminished, as the Commission under section 13(f)(1) of the Act as revised by OSRA no longer has the ability to order shippers to pay the undercharge if there is an

enforceable agreement in writing.[7] *See infra,* discussion of re-rating at § 530.14, originally numbered § 530.16 in the proposed regulation.

Several commenters request that the Commission decrease the ''review period'' and increase the ''cure period'' proposed in the regulations. COSCO requests that the Commission shorten the review period from 20 days to 1 day. COSCO, 2. OCWG also recommends a no-penalty cure period of 20 days. OCWG, 20.

NITL suggests amending § 530.15(b) as proposed to read:

> Within 20 days after the initial filing of an initial or amended service contract, the Commission may reject a service contract that does not conform to the requirements of section 8(c) of the 1984 Act. Prior to rejection, the Commission shall provide notice to the filing party of the deficiencies in the contract and shall provide such party 20 days to cure the deficiencies. A failure to cure the deficiencies within the stated time period will result in rejection of the contract. The filer of the contract shall notify the shipper of any contract rejection within 10 days of its receipt of notice of rejection. Until the cause for potential rejection is cured, no cargo may be transported under the contract following the receipt of notice of the rejection by the shipper.

NITL, 21

JUSEFC suggests a two-tier approach to review. First, they suggest, a short period (3 days) in which the Commission would determine whether there is a serious enough breach as to require rejection *ab initio,* notify the filer and give it the opportunity to make corrections. Then, a second period (10 days)(if the deficiency is not corrected) for continuing review, after which (again if not corrected), rejection would be effective as of the close of the correction period, but not as of the date the contract was originally filed. JUSEFC, 8–9. JUSEFC's proposal would appear to allow the contract rates to be effective for a period of up to 13 days, even if the deficiencies are never cured, and to allow the contract rates to be lawful. JUSEFC, 8–9. This procedure, JUSEFC claims, would comply with the Commission's practice with respect to tariff rates rejected after they have become effective as well as the Filed Rate Doctrine as affirmed in *Maislin Industries, Inc.* v. *Primary Steel, Inc.,* 497 U.S. 116 (1990).[8]

With the changes the Commission has made to the filing system, and the relief from many of the technical requirements which accompany those changes, the Commission will completely remove the rejection procedure in the proposed regulation. There will therefore be no requirement that the Commission conduct a review of service contract filings according to any deadline. Of course, this would have no effect on the Commission's ability to review service contract filings for statutory and regulatory compliance and pursue investigatory or enforcement action as it deems necessary.

JUSEFC's concern that the Commission has compromised the right of filing parties to amend their contracts to meet the Commission's objections and preserve the original effective dates of their contracts is misplaced. The assertion that parties have a right to ''correct'' or ''cure'' their deficient service contracts and preserve the filing date is unsupported by any statutory requirement. Commenters who argue for the Commission to give filers time to correct deficiencies appear to suggest that the Commission must review filings for facial defects as they are filed, and further, that if the Commission does not notify the filer of a deficiency, that the service contract is compliant with the Act and regulations. While it has been the past policy and practice of the Commission in the past to review essential terms documents as they were filed with the ATFI system and its ability to conduct associative checks, there is no statutory requirement that the Commission give parties time to ''cure'' their defective filings during which they may operate under the defective service contract.

The rejection procedure was originally intended to, first, be a service to filers and, second, to preserve the system integrity of the data in the ATFI-based statements of essential terms. When transmission to ATFI failed, BTCL, through the rejection procedure outlined in the proposed regulations, would notify filers that the essential terms publication they had attempted to file was defective. The automated nature of conformity checks made this possible.

Acceptance by the Commission of a document, including an electronically-filed statement of essential terms does not and never did, indicate the Commission's ''approval'' of a service contract. The Commission expects that BTCL, as it detects minor deficiencies in filed service contracts, may notify the filers and allow for re-filing within a reasonable period of time, at their discretion, but will not be required to do so. Therefore, the rejection procedures are deleted entirely.

Carrying cargo under a service contract before it has been filed with the Commission is prohibited by proposed Commission regulation § 530.8(a). Carrying cargo under a defective service contract (for example, one which does not contain one of the eight essential terms or which fails to state them with adequate certainty; or does not contain the shipper certification; or does not conform to the filing requirements of § 530.8; or does not concurrently publish the four public essential terms) would be a violation of the Act, and subject to penalties of section 13 of the Act. The comments reveal confusion on this point which the Commission wishes to dispel. The filing of a service contract does not, nor did it ever, imbue the service contract with any type of Commission approval or imprimatur, any more than would the filing of a tax return with the Internal Revenue Service.

It has, however, been the past practice of BTCL to informally notify filers of deficiencies in their service contract filings. BTCL would provide filers of essential terms statements an opportunity to cure the defects by re-transmitting the electronic data to the ATFI system. Furthermore, it appears that BTCL has rarely, if ever, invoked the predecessor section of this regulation. However, the reception of the entirety of service contracts in electronic form will significantly change the method by which the Commission may review the filings. Therefore, with that, and the following discussion in mind, the Commission has concluded that the rejection provision of the proposed rule will be removed.

A service contract is defined by section 2(19) of the Act, as revised by OSRA, as

> a written contract, other than a bill of lading or a receipt, between one or more shipper and an individual ocean common carrier or an agreement between or among ocean common carriers in which the shipper or shippers makes a commitment to provide a certain volume or portion of cargo over a fixed period of time, and the ocean common carrier or the agreement commits to a certain rate or rate schedule and a defined service

[7] This does not, however, relieve parties of liability for acting pursuant to an unfiled service contract.

[8] The Supreme Court in *Maislin* construed the Interstate Commerce Act (''ICA'') requirement that tariffs be filed (49 U.S.C. 10762(a)(1)(1982 ed.)), that carriers were prohibited from providing services at any other rate other than the filed rate (49 U.S.C. 10761(a)(1982 ed.), and that the Interstate Commerce Commission (''ICC'') assess those rates for reasonableness. Like the Commission under the 1984 Act as amended by OSRA, the ICC had the authority to impose civil penalties for deviation from the filed rate (49 U.S.C. 11902–11904(1982)). However, unlike the Commission under OSRA, the ICC was directed by statute to order that the difference between the filed rate and the actual rate be paid. With the addition of the second sentence to section 13(f)(1) to the Act, the Commission no longer has either that mandate or authority.

level, such as assured space, transit time, port rotation, or similar service features. The contract may also specify provisions in the event of nonperformance on the part of any party.

Two specific requirements for service contracts are found in section 8(c)(2): First, that the service contract be filed with the Commission; and second, that it contain seven specific terms. Section (8)(c)(2)(A)–(G). If the service contract either (1) does not meet the definition in the Act; (2) is not filed with the Commission; or (3) does not contain one of the terms required by the Act, it is not a service contract as defined by the Act.

Finally, the comments agree that the Commission should accept for filing mixed contracts, but recommend that the requirement that exempt commodities in such filed service contracts have a tariff rate be deleted, as there is no need for the Commission to regulate exempt commodity rates, charges and conditions of service in a mixed exempt and non-exempt commodity service contract any more than the Commission has a need to regulate contracts that are exclusively exempt commodities. P&O, 5. The exempt commodities to which P&O refers are those exempted from tariff publication and from service contract filing by the Act in section 8. A service contract of mixed exempt and non-exempt commodities therefore may not have corresponding tariff rates. Therefore, in the unlikely event that the service contract is canceled as described in § 530.10 (as renumbered), and there is no provision for such cancellation in the terms of the contract itself, there would be no corresponding tariff rate at which the exempt cargo would be re-rated. Therefore, some ''general rate'' must be available if an exempt commodity is to be filed in a service contract, and the proposed rule will not be amended in this regard. As this is adequately provided for in § 530.13 as revised, and with regard to the foregoing discussion of rejection, § 530.15 is deleted entirely and the following sections are accordingly renumbered.

Proposed Regulation § 530.16—Implementation, Prohibition and Re-Rating

The proposed regulations in § 530.16 (as originally numbered) had carried over some of the provisions of current § 514.7(l)(ii) which read,

> In the event of a contract which is not provided for in the contract itself and which results from mutual agreement of the parties or because the shipper * * * has failed to tender the minimum quantity required by the contract: * * * (B) The cargo previously carried under the contract shall be re-rated according to the otherwise applicable tariff provisions of the carrier or conference in effect at the time of each shipment.

The proposed regulations anticipated re-rating[9] for service contracts with non-conference agreements, but did not address how the regulations should be changed in recognition of the new limitations to penalties added by section 13(f)(1) of OSRA. Re-rating under the proposed rules would take place only if the contract *did not contemplate* mutual termination or if the shipper failed to meet minimum cargo requirements. Many comments generally appear to misconstrue the congressional intent of the prohibition of 13(f)(1), and the Commission seeks to clarify the matter in this supplemental information and in the revised text of the regulations.

Commenters have three basic objections to proposed regulation § 530.16, namely that re-rating by the Commission is: (1) Contrary to section 13(f)(1) of the Act as amended by OSRA; (2) contrary to the deregulatory spirit of OSRA; and (3) unfair to the shipper parties to service contracts.

Several comments point to section 13(f)(1) of OSRA as expressly forbidding the re-rating provision in the proposed rules. Conagra, 5; P&O, 6. Other commenters express the belief that re-rating for rejection based on failure to meet regulatory, as opposed to statutory requirements. BSA, 11; CMA, 2; Dupont, 4; NITL, 19–20. NITL asserts that re-rating either for termination by the parties *or* for rejection by the Commission would be contrary to OSRA. NITL, 18. NITL comments that section 13(f)(1) of the revised Act ''expressly prohibits the Commission or a court from ordering a shipper to pay the difference between rates that the shipper and carrier agree upon in writing and that are billed by the carrier, and the rates that are set forth in a tariff or service contract that would otherwise cover the transportation movements.'' NITL, 18–19.

BSA remarks that re-rating during the period between initial filing and rejection by the Commission under § 530.16 is counter to the deregulatory spirit of OSRA. BSA, 11. Commenters also point to this deregulatory spirit to support their assertion that Congress intended parties resolve the question of re-rating due to FMC rejection as a private contractual matter. BSA, 11. Further, P&O comments, re-rating is not consistent with the ability of service contract terms to include liquidated damages or amendments to reduce minimum volume requirements. P&O, 6. NITL also complains that proposed § 530.10(c)(2) (as renumbered) appears to be mandating liquidated damages terms (*i.e.*, the tariff rate) even though parties did not do so. NITL, 19–20.

Comments also cite OSRA's permission to parties to resolve undercharge matters with a written agreement. Dupont, 4. The proposed provisions for re-rating, Dupont complains, would deprive parties of their right to mutually determine settlement of outstanding charges. Dupont, 3–4. Therefore, if there is any Commission rejection at all, the regulations should require the Commission to also notify the shipper of the rejection, and either limit re-rating to shipments made after receipt of such notice or impose penalty on the carrier alone. Dupont, 4.

Shippers complain that re-rating for rejection penalizes the shipper, when it is the carrier who has the responsibility of complying with the filing requirements. Conagra, 4; Dupont, 4; NITL, 19–20; IBP, 2. Several comments suggest that a solution to this injustice would be for the regulations to require the filing of corrections within a specific period of time and to impose a monetary penalty on the filing carrier for significant filing errors. Conagra, 6; Dupont, 4.

NCBFAA complains that proposed § 530.10(c)(2)(ii) (as renumbered), which requires all cargo to be re-rated in the event the service contract is canceled, is arbitrary and punitive. NCBFAA, 20. Furthermore, proposed § 530.16(b)(2) (as originally numbered) would unfairly impose the higher tariff rates on the shipper when it is the carrier who is at fault, especially in a situation, for instance, in which the Commission rejects a service contract six months after filing. NCBFAA 4, 5. Our response to rejection arguments is outlined in the previous discussion of proposed § 530.15 (as originally numbered) which has been deleted from this interim final rule.

As the comments correctly indicate, OSRA adds a new limitation to the remedies the Commission may impose on parties with an added sentence to section 13(f)(1) of the Act, which as revised reads

> [n]either the Commission nor any court shall order any person to pay the difference between the amount billed and agreed upon in writing with a common carrier or its agent and the amount set forth in any tariff or service contract by that common carrier for the transportation service provided.

As explained by Senator Hutchison as she introduced the amendment to S. 414

[9] Such re-rating was proposed to be pursuant to regulation 46 CFR part 530 subpart E, at the tariff rate of the carrier which actually carried the cargo in question.

which added the above language, the drafters intended to

> [r]evise section 13(f) of the 1984 Act to make clear that, while a common carrier may be penalized for charging shippers less than its tariff or service contract rates, a carrier should not be able to collect from the shipper the difference between the tariff or contract rate and the rate actually charged and agreed upon in writing. The collection of these so-called ''undercharges'' was a major problem for shippers when the trucking industry was deregulated. We want to avoid any recurrence of that problem in connection with ocean shipping reform.

144 Cong. Rec. S1068 (March 4, 1998) (Statement of Sen. Hutchison).

The intent of the provision was not, contrary to the assertion of some comments, that parties to a meaningless service contract may circumvent the prohibitions of sections 10(a) and (b) of the Act. Nor was it Congress' intent that parties which wrongfully terminate a service contract have the ability to impose higher rates on an innocent party for cargo that has already moved. The redrafted regulations at §§ 530.10 (as renumbered) and 530.14 (as renumbered) therefore make it clear that if a service contract does not contemplate termination, neither can the parties have illegal access to contract rates, nor can the carrier which wrongfully terminates bill the shipper at the higher tariff rates. Section 530.14 (as renumbered) indicates re-rating is only applicable to such cancellation, and prohibition or suspension of service contracts pursuant to the Commission's authority under sections 9 and 11 of the Act. *See*, Docket No. 98–25; 46 CFR 560.7.

In regard to comments on the unfairness of re-rating after rejection, the concerns of the commenters generally become moot with the elimination of the rejection provisions. The regulations have been redrafted with these particular shipper concerns in mind. First, the Commission points out that it is in the best interests of both parties that a service contract make provision for mutual termination, unilateral termination, and termination for failure to meet minimum cargo commitments. It is only in the absence of such provisions in the terms of the contract itself that the re-rating provisions will apply. The regulations are intended to ensure that parties conform to sections 10(a)(1)[10] (illusory contract or failure to meet minimum quantity commitment); 10(b)(1)[11] (carrier billing contract rate when shipper fails to meet minimum quantity commitment); and 10(b)(2)[12] (failing to charge rate other than that in a filed and valid service contract) of the Act.

If a carrier has entered into a contract with a shipper, that contract would appear to satisfy the requirements of section 13(f) (''an amount agreed upon in writing'') which would in turn protect the shipper from having the cargo re-rated; the charged rates would be those in the service contract. The carrier would likely be hard-pressed to seek to enforce contract obligations upon a shipper where the carrier has unilaterally terminated. Finally, depending on the circumstances, the carrier may be in violation of various proscriptions of section 10, or the shipper may have a cause of action in court for breach of contract.

The Commission finds that section 13(f)(1) was particularly intended to avoid the type of requirement ordered by the Supreme Court in *Maislin*. In *Maislin*, the trustee in bankruptcy of a carrier sought to recover the difference between amount billed (negotiated rate) and the tariff rate. *Maislin* at 135. In response to the deregulatory spirit of the Motor Carrier Act, the Interstate Commerce Commission (''ICC'') had instituted a ''Negotiated Rates Policy,'' namely, that the ICC would not order the shipper to pay the shortfall between a negotiated rate and a tariff rate. The Court found that the ICC was required by the Interstate Commerce Act (''ICA'') to review for reasonableness the rates charged to shippers. Because ''secret'' (negotiated) rates were unreasonable under the ICA, in the event that those rates were not in conformity to the tariff rates, the ICC was required by the Interstate Commerce Act to order the shippers to pay the difference between the filed rate and the negotiated rate (the ''filed rate'' doctrine). *Maislin* at 129. The Court further found that ''if strict adherence to * * * the filed rate doctrine has become an anachronism in the wake of the MCA, it is the responsibility of Congress to modify or eliminate these sections.'' *Maislin* at 135. With this background squarely in mind, taken together with the balance of the Act and the remarks of the sponsors of the bill as finally adopted, it is clear that section 13(f)(1), as added by OSRA, only limits the Commission from ordering a shipper to pay the undercharge in a *Maislin*-type situation. The limitation of section 13(f)(1) was not intended to allow shippers and carriers to use service contracts as an ''unfair or unjust means or device'' to avoid the application of the ''otherwise applicable rate'' contrary to other provisions in the Act. If there are no provisions which anticipate the shipper's failure to meet the minimum cargo requirements of the service contract and the cargo is not subject to re-rating, the contract would appear to be illusory. Allowing the parties to take advantage of an illusory contract would be contrary to the prohibitions of section 10 and the intent of the Act.

Proposed regulations §§ 530.10 and 530.14 (as renumbered) are revised to reflect OSRA's intent that parties to a service contract may not use that agreement as an unfair means or device to avoid the otherwise applicable rate.[13] Thus, the regulations require re-rating for cargo which has already moved under a service contract which is nullified due to a shipper shortfall (unless due to carrier misconduct) and which is not contemplated by the contract's terms.

Finally, subpart D is re-titled, ''Exceptions and Implementation,'' proposed regulation § 530.15 is deleted, and proposed regulation § 530.16 is retitled ''Implementation'' and correspondingly renumbered § 530.14.

Section 530.15 (as Renumbered)—Recordkeeping and Audit

P&O comments that the notice of proposed rulemaking did not adequately explain why this rule is necessary or appropriate. P&O, 7. Further, it complains, there is no statutory authority for the requirement, and it is pointless because the service contract is already subject to a filing requirement. P&O, 7. Also it questions why there is no provision for confidentiality for records obtained by the Commission under this provision of the proposed regulations. P&O, 7.

[10] Section 10(a)(1) prohibits any person to, knowingly and willfully, directly or indirectly, by means of false billing, false classification, false weighing, false report of weight, false measurement, or by any other unjust or unfair device or means obtain or attempt to obtain ocean transportation for property at less than the rates or charges that would otherwise be applicable.

[11] Section 10(b)(1) prohibits a common carrier from, allow[ing] any person to obtain transportation for property at less than the rates or charges established by the carrier in its * * * service contract by means of false billing, false classification, false weighing, false measurement, or by any other unjust or unfair device or means.

[12] Section 10(b)(2)(A) prohibits a common carrier to provide service in the liner trade that

(A) is not in accordance with the rates, charges, classifications, rules and practices contained in a * * * service contract entered into under section 8 of this Act unless excepted or exempted under section 8(a)(1) or 16 of this Act.

[13] The provision will also require re-rating if the service contract has been prohibited or suspended under sections 9 or 11 of the Act, pursuant to § 560.7 of this chapter.

Section 530.15 (as renumbered) was carried over nearly verbatim from the current §§ 514.7(m)(1) and 514.7(m)(3), which read:

(1) Every common carrier or conference shall maintain service contract records in an organized, readily accessible or retrievable manner for a period of five years from the termination of each contract.

* * * * *

(3) Every common carrier or conference shall, upon written request from the FMC's Director, Bureau of Enforcement or any Area Representative, submit requested service contract records within 30 days from the date of the request.

The purpose and statutory authority for these provisions has been examined previously by the Commission and its regulated entities when §§ 514.7(m)(1) and (m)(3) were added to the Commission's regulation.

The electronic filing options that the Commission has chosen to offer, in an effort to reduce burdens on ocean common carrier filers and at their urging, both fall short in one significant respect: The electronic versions of the documents will not have the ability to capture the signature of the parties. Because the Commission will still need to examine the originally executed service contracts, the shortcoming of the electronic filing system continues to make the language in the proposed regulation necessary. While it is true that the Commission has the authority to obtain the information in any event under section 12 of the Act, the Commission has found it useful to reiterate that authority here in order to impress upon carriers that their executed service contracts and related records must be retained and ready for inspection.

It is difficult to imagine how this provision would create any additional burden on filers, as they would presumably retain the originally executed service contract to protect their rights under that contract. With respect to P&O's concerns about confidentiality, the statute already provides for the confidentiality of service contracts and there appears to be no need for further clarification of the issue through rulemaking. For the foregoing reasons, the regulation in this section will be adopted as proposed.

Global Service Contracts

The Commission, in an effort to minimize burden on filers, and encourage them to structure their commercial negotiations based on market forces rather than to conform them to regulatory requirements, requested comment on the filing of global service contracts. Comments generally commend the Commission for recognizing the commercial desirablility of global service contracting. Dupont, Conagra, NITL, CENSA, P&O, P&O and CENSA request confirmation from the Commission that the voluntary inclusion of extrajurisidictional matter in a filed service contract would not expand the Commission's jurisdiction over those matters.

The Commission's intent was to allow parties to enter into service contracts which fit their commercial needs, and relieve them of the burden of negotiating contracts which ''carve out'' the U.S. trades simply because of U.S. filing requirements. Again we confirm that Commission will not assert jurisdiction over foreign-to-foreign matters due solely to the fact that they are included in a service contract filed with the Commission. We also note, however, that the extent to which the U.S. trade matters are affected by, contingent on or reliant on foreign-to-foreign movements, the Commission will have the statutory duty and jurisdiction to obtain the relevant records.

While voluntary filing of global contracts will not subject the non-U.S. matters to FMC jurisdiction, as discussed above, there is a difficulty with how the statement of essential terms shall be made. There is too great a danger that the public will be misled if only the ''U.S. trade'' volumes, for instance, are published, when those volumes are affected by foreign-to-foreign volumes. Therefore, the interim final rules require that the statement of essential terms for filed contracts which include both U.S. trade and non-U.S. trade matters which affect those terms must indicate that the contract includes matter outside the Commission's jurisdiction. Failing to require this disclaimer has too great a potential for confusion by the public reviewing those essential terms. *See*, § 530.12 (publication section regarding exempt and global service contracts).

Inland European Movements in Conference Contracts

In the NPR, the Commission noted the difference in the approaches by the United States and the European Commission (''E.C.'') to the question of inland rate setting by conferences. The NPR requested comment on how the Commission may treat carriers which participate in a conference service contract covering U.S.-Europe ocean movements but sign an individual service contract covering European inland transport for the same shipper customer. The Commission noted in the NPR that it would appear that filing would be consistent with statutory requirements to the extent the contracts establish the European inland portion of a through rate charged by a carrier in a U.S.-Europe intermodal movement. However, the Commission wished to make an effort to minimize the regulatory burdens occasioned by these differences in regulatory regimes, to the extent it may do so given its own statutory responsibility.

The comments make three basic arguments with respect to inland rates in Europe. First, to the extent that service contracts for inland movements in Europe are within the Commission's jurisdiction, they should be exempt from filing because the EU regulates them adequately. BSA and TACA. Second, that they are completely outside the Commission's jurisdiction. BSA. Finally, P&O comments that European charges, if included in a service contract, must be filed with the Commission and are part of the filed essential terms, but not the public essential terms.

P&O's approach appears to be sound. As rate information is not one of the essential terms required to be published by the Act, any regulatory requirement would not order rate information to be published, although it would be filed. As discussed in the filing of ''mixed contracts'' it would appear that the allowance of such filing is for the ease of the filer.

TACA suggests that sections of a service contract relating to inland movements of cargo in Europe should not be required to be filed with the Commission. TACA, 8. TACA proposes that sections of service contracts stating the terms and conditions of European inland transport of shipments covered by the service contract be available from the individual carrier upon request from the Commission (in electronic or paper format at the option of the carrier) within ten days of the request. TACA, 8–9. This would ease the burden on the Commission, completely harmonize with E.C. law, ensure no breach of confidentiality that might take place due to filing via third parties, and ensure public access to the information. TACA, 9.

The disparity between Commission and E.C. requirements generally only becomes problematic when a conference or members of an agreement enter into a service contract in which the rate calculation for port-to-port rates are included, but for which the inland movements in Europe are not included because of the E.C. prohibition on joint rate setting for inland rates. The conference contract filed with the

Commission would presumably include a ''multi-factor through rate'' which would be the ocean transport rate as laid out in the contract, plus an unspecified rate arising from the inland portion of the transportation. If the conference is required by the Commission to file the independent inland rate so that the Commission can calculate the total through rate, the conference may be in violation of the E.C.''s prohibition on confidentiality.

P&O argues that it is clear that inland European charges, if included in a service contract, would have to be filed with the FMC. P&O points out that carriers and shippers may choose to construct multi-factor through rates to and from Europe by using a confidential port/port rate, or a point/port and then adding a published European inland tariff rate to construct a ''multi-factor through rate.''

TACA's suggestion that the Commission exempt these inland movements from filing is a substantial deviation from the filing requirements under the Act. Such an exemption is more properly adopted after a full examination of the matter under Section 16 of the Act. For these reasons and because the change is not mandated by OSRA, the Commission will continue to require that the service contracts in question be filed.

Interim Final Rule Status

As the Commission is introducing substantial matters which were not explored in the NPR, this shall be an interim final rule, under the Commission's authority granted by section 17(b) of the Act.

Regulatory Flexibility Act Analysis

In accordance with the Regulatory Flexibility Act, 5 U.S.C. 601 *et seq.*, the Chairman of the Commission has certified to the Chief Counsel for Advocacy, Small Business Administration, that the rule will not have a significant impact on a substantial number of small entities. In its NPR, the Commission stated that it intended to certify the rulemaking since the affected universe of parties is limited to vessel-operating common carriers. The Commission has determined that such entities do not typically qualify as small under the Small Business Administration guidelines. No comments disputed the Commission's intention to certify. The certification is, therefore, continued.

The Commission has received Office of Management and Budget (OMB) approval for the collection of this information required in this part. Section 530.91 displays the control numbers assigned by OMB to information collection requirements of the Commission in this part by the pursuant to the Paperwork Reduction Act of 1995, as amended. In accordance with that Act, agencies are required to display a currently valid control number. In this regard, the valid control number for this collection of information is 3072–0065.

This regulatory action is not a ''major rule'' under 5 U.S.C. 804(2).

List of Subjects for 46 CFR Part 530

Freight, Maritime carriers, Reporting and recordkeeping requirements.

For the reasons set out in the preamble, the Commission removes 46 CFR part 514 and add new 46 CFR part 530, to subchapter B to read as follows:

PART 514—[REMOVED]

PART 530—SERVICE CONTRACTS

Subpart A—General Provisions

Sec.
530.1 Purpose.
530.2 Scope and applicability.
530.3 Definitions.
530.4 Confidentiality.
530.5 Duty to file.
530.6 Certification of shipper status.
530.7 Duty to labor organizations.

Subpart B—Filing Requirements

530.8 Service contracts.
530.9 Notices.
530.10 Amendment, correction, and cancellation.
530.11 Filing fees and other costs.

Subpart C—Publication of Essential Terms

530.12 Publication.

Subpart D—Exceptions and Implementation

530.13 Exceptions.
530.14 Implementation.

Subpart E—Recordkeeping and Audit

530.15 Recordkeeping and audit.
530.91 OMB control numbers assigned pursuant to the Paperwork Reduction Act.

Appendix A to Part 530—Instructions for the Filing of Service Contracts

Exhibit 1 to Part 530—Service Contract Registration [Form FMC–83]

Authority: 5 U.S.C. 553; 46 U.S.C. App. 1704, 1705, 1707, 1716.

Subpart A—General Provisions

§ 530.1 Purpose.

The purpose of this part is to facilitate the filing of service contracts and the publication of certain essential terms of those service contracts as required by section 8(c) of the Shipping Act of 1984 (''Act''). This part enables the Commission to review service contracts to ensure that these contracts and the parties to them comport with the requirements of the Act. This part also implements electronic filing provisions for service contracts to facilitate compliance and minimize the filing burdens on the oceanborne commerce of the United States.

§ 530.2 Scope and applicability.

An individual ocean common carrier or an agreement between or among ocean common carriers may enter into a service contract with one or more shippers subject to the requirements of the Act.

§ 530.3 Definitions.

When used in this part:

(a) *Act* means the Shipping Act of 1984 as amended by the Ocean Shipping Reform Act of 1998.

(b) *Agreement* means an understanding, arrangement, or association (written or oral) and any modification or cancellation thereof which has been filed and effective under part 535 of this chapter with the Commission. The term does not include a maritime labor agreement.

(c) *Authorized person* means a carrier or a duly appointed agent who is authorized to file service contracts on behalf of the carrier party to a service contract and to publish the corresponding statement of essential terms and is registered by the Commission to file under § 530.5(d) and appendix A to this part.

(d) *BTCL* means the Commission's Bureau of Tariffs, Certification and Licensing or its successor bureau.

(e) *Commission* means the Federal Maritime Commission.

(f) *Common carrier* means a person holding itself out to the general public to provide transportation by water of passengers or cargo between the United States and a foreign country for compensation that:

(1) Assumes responsibility for the transportation from the port or point of receipt to the port or point of destination; and

(2) Utilizes, for all or part of that transportation, a vessel operating on the high seas or the Great Lakes between a port in the United States and a port in a foreign country, except that the term does not include a common carrier engaged in ocean transportation by ferry boat, ocean tramp, or chemical parcel tanker, or by a vessel when primarily engaged in the carriage of perishable agricultural commodities:

(i) If the common carrier and the owner of those commodities are wholly owned, directly or indirectly, by a

person primarily engaged in the marketing and distribution of those commodities and

(ii) Only with respect to those commodities.

(g) *Conference* means an agreement between or among two or more ocean common carriers which provides for the fixing of and adherence to uniform rates, charges, practices and conditions of service relating to the receipt, carriage, handling and/or delivery of passengers or cargo for all members. The term does not include joint service, pooling, sailing, space charter, or transshipment agreements.

(h) *Controlled carrier* means an ocean common carrier that is, or whose operating assets are, directly or indirectly owned or controlled by a government. Ownership or control by a government shall be deemed to exist with respect to any ocean common carrier if:

(1) A majority portion of the interest in the carrier is owned or controlled in any manner by that government, by any agency thereof, or by any public or private person controlled by that government; or

(2) That government has the right to appoint or disapprove the appointment of a majority of the directors, the chief operating officer or the chief executive officer of the carrier.

(i) *Effective date* means the date upon which a service contract or amendment is scheduled to go into effect by the parties to the contract. A service contract or amendment becomes effective at 12:01 a.m. Eastern Standard Time on the beginning of the effective date. The effective date cannot be prior to the filing date of the service contract or amendment with the Commission.

(j) *Expiration date* means the last day after which the entire service contract is no longer in effect.

(k) *File or filing* (of service contracts or amendments thereto) means use of the Commission's electronic filing system for receipt of a service contract or an amendment thereto by the Commission, consistent with one of the methods set forth in appendix A to this part, and the recording of its receipt by the Commission.

(l) *Labor agreement* means a collective-bargaining agreement between an employer subject to the Act, or group of such employers, and a labor organization or an agreement preparatory to such a collective-bargaining agreement among members of a multi-employer bargaining group, or an agreement specifically implementing provisions of such a collective-bargaining agreement or providing for the formation, financing, or administration of a multi-employer bargaining group, but the term does not include an assessment agreement.

(m) *Motor vehicle* means an automobile, truck, van or other motor vehicle used for the transportation of passengers and cargo; but does not include equipment such as farm or road equipment which has wheels, but whose primary purpose is other than transportation.

(n) *Ocean common carrier* means a vessel-operating common carrier.

(o) *OIRM* means the Commission's Office of Information and Resources Management.

(p) *Non-vessel-operating common carrier (''NVOCC'')* means an ocean transportation intermediary as defined by section 3(17)(B) of the Act.

(q) *Service contract* means a written contract, other than a bill of lading or receipt, between one or more shippers and an individual ocean common carrier or an agreement between or among ocean common carriers in which the shipper makes a commitment to provide a certain minimum quantity or portion of its cargo or freight revenue over a fixed time period, and the individual ocean common carrier or the agreement commits to a certain rate or rate schedule and a defined service level, such as, assured space, transit time, port rotation, or similar service features. The contract may also specify provisions in the event of nonperformance on the part of any party.

(r) *Shipper* means a cargo owner; the person for whose account the ocean transportation is provided; the person to whom delivery is to be made; a shippers' association; or an NVOCC that accepts responsibility for payment of all applicable charges under the service contract.

(s) *Statement of essential terms* means a concise statement of the essential terms of a service contract required to be published under § 530.12 of this part.

§ 530.4 Confidentiality.

All service contracts and amendments to service contracts filed with the Commission shall, to the full extent permitted by law, be held in confidence. Nothing contained in this part shall preclude the Commission from providing certain information from or access to service contracts to another agency of the Federal government of the United States.

§ 530.5 Duty to file.

(a) The duty under this part to file service contracts, amendments and notices, and to publish statements of essential terms shall be upon the individual carrier party or parties participating or eligible to participate in the service contract.

(b) Filing may be accomplished by any duly agreed-upon agent, as the parties to the service contract may designate, and subject to conditions as the parties may agree.

(c) Registration. (1) *Application.* For filing pursuant to dial-up filing (option 2 as outlined in appendix A to this part), authority to file or delegate the authority to file must be requested by a responsible official of the service contract carrier party in writing, by submitting to BTCL the Registration Form in Exhibit 1 to this part and the appropriate fee as defined under § 530.11.

(2) *Approved registrations.* OIRM shall provide approved Registrants a log-on ID and password for filing and amending service contracts and so notify Registrants via U.S. mail.

(3) *Software certification.* For filing pursuant to dial-up filing (option 2 as outlined in appendix A to this part), certification of software may be requested by appointment through OIRM and payment of the appropriate fee as set forth in § 530.11. OIRM will test the software as set out in appendix A to this part. Organizations certified prior to May 1, 1999 for the batch filing of ''Essential Terms Publications'' (''ETs'') in the Commission's former ''Automated Tariff Filing Information System'' (''ATFI'') are not required to re-certify their software but may if they so choose using the same procedure as for initial certification.

(4) *Emergencies.* In an emergency, a person, already authorized to maintain and edit its firm's organization record under appendix A to this part, may change its designated ''publisher'' under appendix A to this part, verbally notify BTCL, and promptly submit the proper documents.

(5) *Prior registration and certification.* Each organization registered to file essential terms publications in the Commission's dial-up system before May 1, 1999 will be issued a log-on ID and password for access to file service contracts under the Commission's electronic filing system pursuant to option 2 as set forth in Appendix A to this part.

§ 530.6 Certification of shipper status.

(a) *Certification.* The shipper contract party shall sign and certify on the signature page of the service contract its shipper status (e.g., owner of the cargo, shippers' association, NVOCC, or specified other designation), and the status of every affiliate of such contract party or member of a shippers'

association entitled to receive service under the contract.

(b) *Proof of tariff and financial responsibility.* If the certification completed by the contract party under paragraph (a) of this section identifies the contract party or an affiliate or member of a shippers' association as an NVOCC, the ocean common carrier, conference or agreement shall obtain proof that such NVOCC has a published tariff and proof of financial responsibility as required under sections 8 and 19 of the Act before signing the service contract. An ocean common carrier, conference or agreement can obtain such proof by the same methods prescribed in § 515.27 of this chapter.

(c) *Joining shippers' association during term of contract.* If an NVOCC joins a shippers' association during the term of a service contract and is thereby entitled to receive service under the contract, the NVOCC shall provide to the ocean common carrier, agreement or conference the proof of compliance required by paragraph (b) of this section prior to making any shipments under the contract.

(d) *Reliance on NVOCC proof; independent knowledge.* An ocean common carrier, agreement or conference executing a service contract shall be deemed to have complied with section 10(b)(12) of the Act upon meeting the requirements of paragraphs (a) and (b) of this section, unless the carrier party had reason to know such certification or documentation of NVOCC tariff and bonding was false.

§ 530.7 Duty to labor organizations.

(a) *Terms.* When used in this section, the following terms will have these meanings:

(1) *Dock area* and *within the port area* shall have the same meaning and scope as defined in the applicable collective bargaining agreement.

(2) *Reasonable period of time* ordinarily means:

(i) If the cargo in question is due to arrive in less than five (5) days from the date of receipt of the request as defined in paragraph (b) of this section, two (2) days from the date of receipt of the request; but

(ii) If cargo in question is due to arrive in more than five (5) days from the date of receipt of the request as defined in paragraph (b) of this section, four (4) days from the date of receipt of the request.

(3) *Movement* includes, but is not necessarily limited to, the normal and usual aspects of the loading and discharging of cargo in containers; placement, positioning and re-positioning of cargo or of containers; the insertion and removal of cargo into and from containers; and the storage and warehousing of cargo.

(4) *Assignment* includes, but is not limited to, the carrier's direct or indirect control over the parties which, the manner by which, or the means by which the shipper's cargo is moved, regardless of whether such movement is completed within or outside of containers.

(5) *Transmit* means communication by first-class mail, facsimile, telegram, hand-delivery, or electronic mail (''e-mail'').

(b) *Procedure.* In response to a written request transmitted from a labor organization with which it is a party or is subject to the provisions of a collective bargaining agreement with a labor organization, an ocean common carrier shall state, within a reasonable period of time, whether it is responsible for the following work at dock areas and within port areas in the United States with respect to cargo transported under a service contract:

(1) The movement of the shipper's cargo on a dock area or within the port area or to or from railroad cars on a dock area or within a port area;

(2) The assignment of intraport carriage of the shipper's cargo between areas on a dock or within the port area;

(3) The assignment of the carriage of the shipper's cargo between a container yard on a dock area or within the port area and a rail yard adjacent to such container yard; or

(4) The assignment of container freight station work and maintenance and repair work performed at a dock area or within the port area.

(c) *Applicability.* This section requires the disclosure of information by an ocean common carrier only if there exists an applicable and otherwise lawful collective bargaining agreement which pertains to that carrier.

(d) *Disclosure not deemed admission or agreement.* No disclosure made by an ocean common carrier shall be deemed to be an admission or agreement that any work is covered by a collective bargaining agreement.

(e) *Dispute resolution.* Any dispute regarding whether any work is covered by a collective bargaining agreement and the responsibility of the ocean common carrier under such agreement shall be resolved solely in accordance with the dispute resolution procedures contained in the collective bargaining agreement and the National Labor Relations Act, and without reference to this section.

(f) *Jurisdiction and lawfulness.* Nothing in this section has any effect on the lawfulness or unlawfulness under the Shipping Act of 1984, the National Labor Relations Act, the Taft-Hartley Act, the Federal Trade Commission Act, the antitrust laws, or any other federal or state law, or any revisions or amendments thereto, of any collective bargaining agreement or element thereof, including any element that constitutes an essential term of a service contract under section 8(c) of the Act.

Subpart B—Filing Requirements

§ 530.8 Service Contracts.

(a) Authorized persons shall file with BTCL, in one of the manners set forth in appendix A to this part, a true and complete copy of every service contract or amendment to a filed service contract before any cargo moves pursuant to that service contract or amendment.

(b) Every service contract filed with the Commission shall include the complete terms of the service contract including, but not limited to, the following:

(1) The origin port ranges in the case of port-to-port movements and geographic areas in the case of through intermodal movements;

(2) The destination port ranges in the case of port-to-port movements and geographic areas in the case of through intermodal movements;

(3) The commodity or commodities involved;

(4) The minimum volume or portion;

(5) The service commitments;

(6) The line-haul rate;

(7) Liquidated damages for non-performance (if any);

(8) Duration, including the

(i) Effective date; and

(ii) Expiration date;

(9) The legal names and business addresses of the contract parties; the legal names of affiliates entitled to access the contract; the names, titles and addresses of the representatives signing the contract for the parties; and the date upon which the service contract was signed, except that in the case of a contract entered under the authority of an agreement or by a shippers' association, individual members need not be named unless the contract includes or excludes specific members. Subsequent references in the contract to the contract parties shall be consistent with the first reference (e.g., (exact name), ''carrier,'' ''shipper,'' or ''association,'' etc.). Carrier parties which enter into contracts that include affiliates must either:

(i) List the affiliates' business addresses; or

(ii) Certify that this information will be provided to the Commission upon

request within ten (10) business days of such request. However, the requirements of this section do not apply to amendments to contracts that have been filed in accordance with the requirements of this section unless the amendment adds new parties or affiliates;

(10) A certification of shipper status;

(11) A description of the shipment records which will be maintained to support the service contract and the address, telephone number, and title of the person who will respond to a request by making shipment records available to the Commission for inspection under § 530.15 of this part; and

(12) All other provisions of the contract.

(c) *Certainty of terms.* The terms described in paragraph (b) of this section may not:

(1) Be uncertain, vague or ambiguous; or

(2) Make reference to terms not explicitly contained in the service contract filing itself, unless those terms are contained in a publication widely available to the public and well known within the industry.

(d) *Other requirements.* Every service contract filed with BTCL shall include, as set forth in appendix A to this part by:

(1) A unique service contract number of more than one (1) but less than ten (10) alphanumeric characters in length (''SC Number''); and

(2) A consecutively numbered amendment number no more than three digits in length, with initial service contracts using ''0''(''Amendment number'');

(3) The filed FMC Agreement Number(s) assigned by the Commission under 46 CFR part 535 (if applicable); and

(4) An indication of the method by which the statement of essential terms will be published.

§ 530.9 Notices.

Within thirty (30) days of the occurrence of any event listed below, there shall be filed with the Commission, pursuant to the same procedures as those followed for the filing of an amendment pursuant to § 530.10 and appendix A to this part, a detailed notice of:

(a) Correction (clerical or administrative errors);

(b) Cancellation (as defined in § 530.10(a)(3));

(c) Adjustment of accounts, by re-rating, liquidated damages, or otherwise;

(d) Final settlement of any account adjusted as described in paragraph (c) of this section; and

(e) Any change to:

(1) The name of a basic contract party; or

(2) The list of affiliates under § 530.8(b)(9), including changes to legal names and business addresses, of any contract party entitled to receive or authorized to offer services under the contract.

§ 530.10 Amendment, correction, and cancellation.

(a) *Terms.* When used in this section, the following terms will have these meanings:

(1) *Amendment* means any change to a service contract which has prospective effect and which is mutually agreed upon by the service contract parties.

(2) *Correction* means any change to a service contract which has retroactive effect.

(3) *Cancellation* means an event which is unanticipated by the service contract, in liquidated damages or otherwise, and is due to the failure of the shipper party to tender minimum cargo as set forth in the contract, unless such tender was made impossible by an action of the carrier party.

(b) *Amendment.* Service contracts may be amended by mutual agreement of the parties to the contract. Amendments shall be filed electronically with the Commission in the manner set forth in § 530.8 and Appendix A to this part.

(1) Where feasible, service contracts should be amended by amending only the affected specific term(s) or subterms.

(2) Each time any part of a service contract is amended, the filer shall assign a consecutive amendment number (up to three digits), beginning with the number ''1.''

(3) Each time any part of the service contract is amended, the ''Filing Date'' will be the date of filing of the amendment.

(c) *Corrections.* Either party to a filed service contract may request permission to correct clerical or administrative errors in the terms of a filed contract. Requests shall be filed, in duplicate, with the Commission's Office of the Secretary within forty-five (45) days of the contract's filing with the Commission, and shall include:

(1) A letter of transmittal explaining the purpose of the submission, and providing specific information to identify the initial or amended service contract to be corrected;

(2) A paper copy of the proposed correct terms. Corrections shall be indicated as follows:

(i) Matter being deleted shall be struck through; and

(ii) Matter to be added shall immediately follow the language being deleted and be underscored;

(3) An affidavit from the filing party attesting with specificity to the factual circumstances surrounding the clerical or administrative error, with reference to any supporting documentation;

(4) Documents supporting the clerical or administrative error; and

(5) A brief statement from the other party to the contract concurring in the request for correction.

(6) If the request for correction is granted, the carrier, agreement or conference shall file the corrected contract provisions using a special case number as described in appendix A to this part.

(d) *Cancellation.* (1) An account may be adjusted for events and damages covered by the service contract. This shall include adjustment necessitated by either liability for liquidated damages under § 530.8(b)(8), or the occurrence of an event described in paragraph (d)(2) of this section.

(2) In the event of cancellation as defined in § 530.10(a)(3):

(i) Further or continued implementation of the service contract is prohibited; and

(ii) The cargo previously carried under the contract shall be re-rated according to the otherwise applicable tariff provisions.

(e) If the amendment, correction or cancellation affects an essential term required to be published under § 530.12 of this part, the statement of essential terms shall be changed as soon as possible after the filing of the amendment to accurately reflect the change to the contract terms.

§ 530.11 Filing Fees and other costs.

(a) Under the authority of the Independent Offices Appropriation Act, 31 U.S.C 9701, the Commission assesses a filing fee for the filing of service contracts, modifications and corrections thereto. Unless otherwise provided in this part, checks, drafts or money orders shall be remitted and made payable to Federal Maritime Commission, 800 N. Capitol Street, NW., Washington, DC 20573.

(b) Unless otherwise specified, overdue payments will be charged interest in accordance with the rate established by the Department of the Treasury for each 30-day period or portion thereof that the payment is overdue. In addition to any other remedy and penalty provided by law and regulation, if payment is overdue for ninety (90) days the Commission

may suspend or terminate electronic filing access.

(c) Fees. (1) *Service contracts and amendments.* For filing pursuant to option 2, as set forth in Appendix A to this part (''dial-up filing''), the filing fee shall be $1.63 per filing for all initial and amended service contract filings.

(2) *Filer registration.* For filing pursuant to option 2, filer registration fee shall be $91 for initial registration for one firm and one individual; and $91 for additions and changes. No fee will be assessed to continue filer registration for organizations registered for batch filing with the Commission prior to May 1, 1999.

(3) *Filing Guide.* For filing pursuant to option 2, filing guides shall cost $25 for diskette; $49 for paper format. Requests for filing guides should be made in writing and addressed to: ''BTCL Manuals,'' Federal Maritime Commission, 800 N. Capitol Street, NW, Washington, DC 20753.

(4) *Corrections.* The fee for corrections to service contracts under § 530.10(c) shall be $233.

(5) *Software certification.* For filing pursuant to option 2, the fee for software certification shall be $496 per test submission.

Subpart C—Publication of Essential Terms

§ 530.12 Publication.

(a) *Contents.* All authorized persons who have a duty to file service contracts under § 530.5 are also required to make available to the public, contemporaneously with the filing of each service contract with the Commission, and in tariff format, a concise statement of the following essential terms:

(1) The port ranges:

(i) Origin; and

(ii) Destination;

(2) The commodity or commodities involved;

(3) The minimum volume or portion; and

(4) The duration.

(b) *Certainty of terms.* The terms described in paragraph (a) of this section may not:

(1) Be uncertain, vague or ambiguous; or

(2) Make reference to terms not explicitly detailed in the statement of essential terms, unless those terms are contained in a publication widely available to the public and well known within the industry.

(c) *Location.* (1) The statement of essential terms shall be published as a separate part in the filer's automated tariff publication, conforming to the format requirements set forth in part 520 of this chapter.

(2) Multi-party service contracts. For contracts in which more than one carrier party participates or is eligible to participate, the statement of essential terms may be published:

(i) As a separate part of the parties' relevant conference tariff; or

(ii) By each of the parties as a separate part of their individual tariff publication pursuant to part 520 of this chapter, clearly indicating the relevant FMC-assigned agreement number.

(c) *References.* The statement of essential terms shall contain a reference to the same number as that for the confidentially filed service contract (''SC Number'' as described in § 530.8(d)(1)).

(d) *Terms.* (1) The publication of the statement of essential terms shall accurately reflect the terms as filed confidentially with the Commission.

(2) If any of the published essential terms include information not required to be filed with the Commission but filed voluntarily, the statement of essential terms shall so note.

(e) *Agents.* Common carriers, conferences, or agreements may use agents to meet their publication requirements under this part.

(f) *Commission listing.* The Commission will publish on its website, www.fmc.gov, a listing of the locations of all service contract essential terms publications.

(g) *Updating statements of essential terms.* To ensure that the information contained in a published statement of essential terms is current and accurate, the statement of essential terms publication shall include a prominent notice indicating the date of its most recent publication or revision. When the published statement of essential terms is affected by filed amendments, corrections, or cancellations, the current terms shall be changed and published as soon as possible in the relevant statement of essential terms.

Subpart D—Exceptions and Implementation

§ 530.13 Exceptions.

(a) *Generally.* The Commission will not accept for filing service contracts which exclusively concern bulk cargo, forest products, recycled metal scrap, new assembled motor vehicles, waste paper or paper waste, as those terms are defined in section 3 of the Act or § 530.3 of this part, or service contracts which relate solely to commodities or services exempted from service contract filing by the Commission under Section 16 of the Act.

(b) *Inclusion in service contracts.* An excepted commodity or exempted service, as listed in paragraph (a) of this section, may be included in a service contract filed with the Commission, but only if:

(1) There is a tariff of general applicability for the transportation, which contains a specific commodity rate for the excepted commodity; or

(2) The contract itself sets forth a rate or charge which will be applied if the contract is canceled, as defined in § 530.10(a)(3).

(c) *Waiver of exemption.* Upon filing under this section, the service contract shall be subject to the same requirements as those for service contracts generally.

§ 530.14 Implementation

(a) *Generally.* Performance under a service contract or amendment thereto may not begin before the day it is effective and filed with the Commission.

(b) *Prohibition or suspension.* When the filing parties receive notice that an initial or amended service contract has been prohibited under section 9(d) or suspended under section 11a(e)(1)(B) of the Act:

(1) Further or continued implementation of the service contract is prohibited;

(2) All services performed under the contract shall be re-rated in accordance with the otherwise applicable tariff provisions for such services with notice to the shipper within five (5) days of the date of prohibition or suspension; and

(3) Detailed notice shall be given to the Commission under § 530.9 within thirty (30) days of:

(i) The re-rating or other account adjustment resulting from prohibition or suspension under paragraph (b)(2) of this section; or

(ii) Final settlement of the account adjusted under § 530.10.

(c) *Agreements.* If the prohibited or suspended service contract was that of an agreement with no common tariff, the re-rating shall be in accordance with the published tariff rates of the carrier which transported the cargo in effect at the time.

Subpart E—Recordkeeping and Audit

§ 530.15 Recordkeeping and audit.

(a) *Records retention for five years.* Every common carrier, conference or agreement shall maintain original signed service contracts, amendments, and their associated records in an organized, readily accessible or retrievable manner for a period of five (5) years from the termination of each contract.

(b) (paragraph (b) is stayed until further notice.) *Where maintained.* (1) Service contract records shall be maintained in the United States, except that service contract records may be maintained outside the United States if the Chairman or Secretary of an agreement or President or Chief Executive Officer of the carrier certifies annually by January 1, on a form to be supplied by the Commission, that service contract records will be made available as provided in paragraph (c) of this section.

(2) Penalty. If service contract records are not made available to the Commission as provided in paragraph (c) of this section, the Commission may cancel any carrier's or agreement's right to maintain records outside the United States pursuant to the certification procedure of paragraph (b) of this section.

(c) *Production for audit within 30 days of request.* Every carrier or agreement shall, upon written request of the FMC's Director, Bureau of Enforcement, any Area Representative or the Director, Bureau of Economics and Agreements Analysis, submit copies of requested original service contracts or their associated records within thirty (30) days of the date of the request.

(d) *Agreement service contracts.* In the case of service contracts made by agreements, the penalties for a failure to maintain records pursuant to this section shall attach jointly and severally on all of the agreement members participating in the service contract in question.

§ 530.91 OMB control numbers assigned pursuant to the Paperwork Reduction Act.

The Commission has received OMB approval for this collection of information pursuant to the Paperwork Reduction Act of 1995, as amended. In accordance with that Act, agencies are required to display a currently valid control number. The valid control number for this collection of information is 3072–0065.

Appendix A—Instructions for the Filing of Service Contracts

Service contracts shall be filed in accordance with one of the methods described in this appendix, at the filer's option.

I. Registration, Log-On ID and Password

A. For filing pursuant to dial-up filing (option 2 as outlined in this appendix A), system identifications for filing log-on (''log-on IDs'') and initial password are obtained by submitting the Service Contract Registration Form (Form FMC–83, Exhibit 1 to this part), along with the proper fee under § 530.11 and other necessary documents, including delegation of authority, as prescribed by this part, to BTCL. A separate Service Contract Registration Form is required for each individual that will file service contracts. However, each organization certified prior to May 1, 1999 to perform batch filing of Essential Terms Publications in the Commission's former Automated Tariff Filing Information (''ATFI'') system, will be issued a new log-on ID and password for access to file service contracts. Filers who wish a third party (publisher) to file their service contracts must so indicate on Form FMC–83. Authority for organizational filing can be transferred by submitting an amended registration form requesting the assignment of a new log-on ID and password. The original log-on ID will be canceled when a replacement log-on ID is issued.

B. Log-on IDs and passwords may not be shared with or loaned to or used by any individual other than the individual registrant. The Commission reserves the right to disable any log-on ID that is shared with, loaned to or used by parties other than the registrant.

C. Authority for organizational filing can be transferred by submitting an amended registration form requesting the assignment of a new log-on ID and password. The original log-on ID will be canceled when a replacement log-on ID is issued.

Option 1—Interactive Internet-based Filing

I. General Instructions

Filers who wish to file service contracts via the internet shall do so in accordance with the instructions found on the Commission's home page, http://www.fmc.gov. Internet-based filers must first register with BTCL which, upon review of the registration, will direct OIRM to provide the filer with a log-on ID and a password. After receiving a log-on ID and password from OIRM, the filer will be able to log on to the service contract filing area on the Commission's home page and file service contracts.

The filing screen will request such information as: Filer name, Registered Persons Index (''RPI'') number and carrier RPI number (if different); Service Contract and Amendment Number; and effective date. The filer will attach the entire service contract file and submit it into the system. When the service contract has been submitted for filing, the system will assign a filing date and an FMC control number, both of which will be included in the acknowledgment/confirmation message.

Option 2—Dial-up Filing

I. General Instructions

Filers who wish to file service contracts directly in the Commission's database via dial-up filing shall do so in accordance with the instructions found in the Service Contract Filing Guide (''Filing Guide''). Filers may inspect a copy of the Filing Guide at the office of BTCL, 800 N. Capitol St., NW, Suite 940, Washington, DC 20753. The Filing Guide may be purchased from BTCL for the fee specified in 46 CFR 530.11.

The Filing Guide includes the following items:

(a) *Transaction set.* The transaction set format includes all transaction set segments and segment definitions.

(b) *Data Element Dictionary (''DED'').* The data element dictionary contains the definition of data elements (e.g., amendment number, date formats, etc.)

II. Filing

The dial-up system assigns the filing date, which is the date an electronically transmitted (''on-line batch'') filing session file transfer is initiated, assuming there has been a successful file transfer. After the filing is processed, a filing-results message is placed in the filer's electronic mailbox on the central site system.

A. *Procedure.* Filing by dial-up is performed by transmission of prepared service contract material to the FMC system over dial-up lines from the filer's own computer, using Filing Guide service contract transaction set formats and the KERMIT or ZMODEM file transfer protocols. The conclusion of the file transfer sequence is a positive keyboard entry to initiate the transfer and a response that indicates completion of that submission.

B. *General format requirements.*

1. *Database format.* The FMC service contract database is structured from service contract data elements and the service contract terms formed by logical grouping of those elements.

2. *Transmission.* On-line batch transmission of service contracts to the FMC computer is governed by the transaction sets contained in the Filing Guide. Service contract filings not complying with the regulations in this part or the formats and valid codes contained in the Filing Guide will not be accepted by the system.

3. *Adding new transaction data.* Requests for major changes or additions to the transaction set format and/or data shall be submitted in writing to BTCL, with sufficient detail and reasons for each proposed change. A contact person and telephone number also should be provided in case of questions.

(a) A proposed major change (other than a correction), such as one made to a transaction set, will require formal configuration management procedures and a minimum of thirty (30) days' advance notice of the change in the **Federal Register** and the ''Service Contract System News,'' available at system log-on, and by other established Commission communications procedures.

(b) Minor changes will be entered into the system and published as soon as possible. Such minor changes include additions to any of the standard terminology published in appendix A to part 520 of this chapter.

C. *Hardware and software requirements.*

The basic equipment necessary to file service contracts is a personal computer (''PC''), a VT–100 emulation software package, and a modem. The modem must be v.34 compatible. The transmitted filing session must be formatted to comply with the transaction sets. The transmission may be via the use of KERMIT or ZMODEM file transfer protocols after establishing a link for on-line batch filing with the FMC central site computer.

The Commission will not make available to the public software packages for firms to use in formulating service contract filings for the dial-up system. The Commission has released

the Filing Guide (with transaction set format) into the public domain so that qualified commercial firms can develop filing software for the general market. Firms which develop filing software, must, by appointment through the Commission's Office of Information Resources Management and payment of the fee set forth in § 530.11 of this part, test their formatting of service contract transaction set format by submission of that data to the FMC central site computer before they will be permitted to transmit any filings. The data must be submitted via on-line batch transmission over dial-up telecommunications links using the required file transfer protocols. Testing will require submission of sample service contract filings to the FMC system, with an evaluation of the actual results of the attempted filings to ensure that the transaction set formats are properly employed and that the filing results are consistent with the filer's expectations. Organizations certified prior to May 1, 1999 for the batch filing of Essential Terms Publications in the Commission's former ATFI system are not required to re-test their software but may if they so choose using the same procedure as for initial registrants.

D. *Connecting to the Service Contract Filing System.*

The dial-up procedures are set forth in the Filing Guide.

E. *Major menu selections.*

Proper connection will lead the filer to the ''Logo Menu,'' which allows selections by any filer for ''Organization Maint.,'' ''Mailbox,'' ''Service Contract System News,'' ''Change Password,'' ''Screen Setup,'' and ''Logout.'' Additionally, a registered filer can access ''Begin File Transfer'' to initiate the on-line batch filing of a service contract. Upon the selection of ''Begin File Transfer'' the filer will be presented the option to select KERMIT or ZMODEM and to commence the file transfer.

F. *Conformity checks.*

Certain service contract data submitted to the FMC for filing via dial-up may be automatically screened for compliance with conformity checks. The conformity checks are syntax checks, validity checks and associative checks. The system will generally not accept service contracts which fail conformity checks. Filers may be notified of automatic conformity check problems at this stage by electronic mail, with a follow-up letter if the electronic mail has not been read within ten (10) days of dispatch. The conformity checks are:

1. *Syntax Checks.* Service contracts will be checked for file integrity, proper data types, field lengths, and logical sequence according to the Filing Guide's transaction sets.

2. *Validity Checks.* Certain data elements of filed service contracts will also be checked for data validity by type against the DED's published reference tables, such as amendment codes, amendment numbers and valid dates.

3. *Associative Checks.* The system uses associative checks to identify logical conformity with the requirements of the Act and Commission regulations. The following are some representative types of associative checks performed by the system.

(a) Any initial service contract or amendment must have:

(i) A valid organization number.

(ii) No suspended carrier or object status.

(iii) Appropriate filing authority.

(iv) Filing date (system-assigned) equal to or less than the effective date.

(v) Valid and appropriate filing/amendment codes.

(vi) Valid and appropriate filing, effective, and expiration dates.

(vii) When used, valid special case number and filing/amendment code ''S,'' with no other filing/amendment codes entered.

(viii) Each service contract must have a new (unique to carrier/conference/agreement) service contract number. The service contract number must be paired with a unique essential terms number and the pair must remain constant for all amendments and must be consistent between the filed service contracts and the published statement of essential terms.

G. *Filing/amendment codes.*

1. *Codes.* Filing/amendment codes must be valid Filing Guide codes and the effective, termination (if any) and expiration dates must match the corresponding dates published in the statement of essential terms.

2. *Multiple symbols.* Filed service contracts frequently can be coded with more than one symbol. Accordingly, the field, ''Amendment Type,'' will allow up to three different, compatible symbols (amendment codes and definitions are presented in the Filing Guide and the Standard Terminology appendix to 46 CFR part 520).

H. *Control dates and history.*

1. *Filing date.* Filers will have a filing date automatically assigned to all service contracts and amendments filed according to the start time of the file transfer, for file transfers that are successfully completed (U.S. Eastern Standard Time).

2. *Effective date.* The effective date is the date upon which a service contract or amendment is scheduled to go into effect by the parties to the contract. A service contract or amendment becomes effective at 12:01 a.m. on the beginning of the effective date. The effective date cannot be prior to the filing date of the service contract or amendment with the Commission.

3. *Expiration date.* The expiration date is the last day, after which the entire service contract is no longer in effect.

III. Organization Record and Register

A. *Organization Record.* The organization record is the master record for all service contract information in the system for a specific firm. Upon registration, a ''shell'' organization record, specific to the requestor, is established and contains the organization number, organization name and organization type. The firm's authorized representative can then access the newly established organization record, using the special access log-on ID and password to file the address for the firm's home office, and complete the affiliations, d/b/as, and publisher lists as appropriate. To maximize security of the data, review and maintenance of the organization record will be permitted only to the individual in the firm holding the special access log-on ID and password for organization record maintenance.

B. *Service Contract Register.* Each organization must create a service contract register (''register'') prior to the filing of any service contracts or amendments thereto (and including ''general rules'' filings). The register is a directory subordinate to which service contracts and their amendments are filed. Each organization may create more than one register according to any criteria they wish (e.g., according to location groups). Each register must include a record reflecting the filer's name and organization number. At the option of the filer, the register may also include the filer's service contract rules of general applicability, (''boilerplate'') i.e., the standard terms and conditions set by the carrier party to a service contract which govern the application of service contract rates, charges and other matters.

IV. Format Requirements

Each service contract filed by Option 2 (''dial-up'') shall contain the following:

A. *Service Contract Title.* The filer's title of the service contract (generally descriptive of the commodity and/or service).

B. *SC Number (Service contract number).* The ''SC Number'' is defined by the filer and shall be entered in the appropriate field.

C. *ET Number (statement of essential terms number).* The ''ET Number'' is defined by the filer and shall be entered in the appropriate field. (Note: Service contracts must have a new (unique to carrier/conference/agreement) service contract number for the initial filing. The service contract number must be paired with a unique essential terms number and the pair must remain constant for all amendments and must be consistent between the filed service contracts and the published essential terms documents.)

D. *Amendment Number.* Where feasible, service contracts should be amended by amending only the affected specific term(s) or subterms. Each time any part of a service contract is amended, the filer shall assign a consecutive amendment number (up to three digits), beginning with the number ''1.'' The amendment number field must be ''0'' or void for the initial filing. Each time any part of the service contract is amended, the filing date will be the date of filing of the amendment.

E. *FMC File Number.* The FMC File Numbers will be system-assigned as initial service contract filings are received and processed. The FMC File Numbers will be assigned sequentially and will start at a number designated by the FMC. The FMC File Number will be provided to filers in the acknowledgment message (via electronic mail).

F. *Effective Date.* The service contract must indicate the effective date and the expiration date governing the duration of the contract. The duration must also be set forth in Term No. 8 where the duration of the contract shall be stated as a specific fixed time period, with an effective date and an ending date.

G. *Amendment Codes.* All amendment codes listed in the Filing Guide, except ''G'' and ''S'', may be used in any combination, but limited to three amendment codes per amendment.

H. *Special case symbol and number.* The ''S'' amendment code must be used singly, and in conjunction with a validated special case number for corrections to service contracts.

I. *Filing Date.* The filing date is automatically set by the system whenever a service contract or amendment thereto is filed.

J. *Contract terms (''terms'').* Nos. 1 to 11 shall address the subjects and bear the terms' titles for the respective numbers exactly as provided in this section. (Note: If a subject is not included, such as No. 12, the number must be listed with the appropriate title and the designation ''NA.'' All terms may be subdivided into subterms to facilitate amendment).

1. *Origin (No. 1).* ''Origin'' includes the origin port range(s) in the case of port-to-port movements, and the origin geographic area(s) in the case of through intermodal movements, except that the origin and destination of cargo moving under the contract need not be stated in the form of ''port ranges'' or ''geographic areas,'' but shall reflect the actual locations agreed to by the contract parties.

2. *Destination (No. 2).* ''Destination'' includes the destination port range(s) in the case of port-to-port movements, and the destination geographic area(s) in the case of through intermodal movements, except that the origin and destination of cargo moving under the contract need not be stated in the form of ''port ranges'' or ''geographic areas,'' but shall reflect the actual locations agreed to by the contract parties.

3. *Commodities (No. 3).* Term No. 3 shall include all commodities covered by the service contract. For each commodity filed in this term, a separate formatted commodity index entry is required.

4. *Minimum quantity or portion (No. 4).* Term No. 4 shall address the minimum quantity or portion of cargo and/or amount of freight revenue necessary to obtain the rate or rate schedule(s). The minimum quantity or cargo committed by the shipper may be expressed as a fixed percentage of the shipper's cargo.

5. *Service commitments (No. 5).* Term No. 5 shall address the service commitments of the carrier party(ies), such as assured space, transit time, port rotation or similar service features.

6. *Rates or rate schedule(s) (No. 6).* Term No. 6 shall contain the contract rates or rate schedules, including any additional or other charges (e.g., general rate increases, surcharges, terminal handling charges, etc.) that apply, and any and all conditions and terms of service or operation or concessions which in any way affect such rates or charges.

7. *Liquidated damages for non-performance, if any (No. 7).* Term No. 7 shall include liquidated damages for non-performance, if the parties have seen fit to so provide.

8. *Duration of the contract (No. 8).* The duration of the contract shall be stated as a specific, fixed time period, with an effective date and an expiration date.

9. *Signature date/contract parties/signatories & any affiliates (No. 9).* The identification of contract parties must be included as follows:

(a) The legal names and business addresses of the contract parties. (Note: if the service contract is entered into under the authority of an agreement, this shall include the corresponding agreement number on file with the Commission);

(b) The legal names, titles, and addresses of representatives signing the contract for the parties and the date the contract was signed; and

(c) The legal name(s) and business address(es) of affiliates entitled to access the contract, if any. Subsequent references in the contract to the contract parties shall be consistent with the first reference (e.g., (exact name), ''carrier,'' ''shipper,'' or ''association,'' etc.). (Note: This term must name every affiliate of each contract party named under § 530.8(b)(9) entitled to receive or authorized to offer services under the contract, except that in the case of a contract entered into by all the members of a conference, agreement or shippers' association, individual members need not be named unless the contract includes or excludes specific members.)

10. *Shipper's Status Certification and Affiliates, if any. (No. 10).* The shipper signatory(ies) must certify its status and that of any affiliates in accordance with § 530.6 of this part.

11. *Records (No. 11).* Term No. 11 must contain:

(a) A description of the shipment records which will be maintained to support the contract; and

(b) The address, title, and telephone number of the person who will respond to a request by making the original signed service contract and shipment records available to the Commission for inspection under § 530.15 of this part.

12. *Other Provisions of the Contract (No. 100–999).* Any term of a service contract not otherwise specifically provided for in this section shall be entered after the above terms and in numerical order, beginning with No. 100.

BILLING CODE 6730–01–P

EXHIBIT 1 -- SERVICE CONTRACT REGISTRATION [FORM FMC-83]

ORGANIZATION NO. _____

PLEASE TYPE OR PRINT

SERVICE CONTRACT REGISTRATION

(SEE ATTACHED INSTRUCTIONS)

1. This Registration is: [ ] **Initial** [ ] **Amendment** (Specify change)_____
[ ] **Dial-up** [ ] **Internet-based**

2. Registrant

_____
Full Legal Name of firm (or individual, if not a firm)
_____
(Doing Business As)

3. Address of Home Office

_____ ( ) _____
(Number and Street) Telephone
_____ ( ) _____
(Number and Street) Fax
_____
(City/State/Country) (Federal TIN Number) E - M a i l (optional)

4. Billing Address If Different

_____ ( ) _____
(Number and Street) Telephone
_____ ( ) _____
(Number and Street) Fax
_____
(City/State/Country) E - M a i l (optional)

5. Organization Number (If known)_____

6. Registrant Type (Check one) [ ] **VOCC** [ ] **Tariff Publisher/Agent/Other**
[ ] **Agreement** [ ] **Conference/Joint Service**

7. Permissions Requested and Person granted these permissions (Check permissions that apply)

_____
Full Legal Name

☐ **Maintenance of organization record** ☐ **File Service Contracts**

8. Registered for Batch Filing Prior to May 1, 1999? (Y/N) ____ **If Yes, show date**_____
If the person to perform the filing already has an existing Log-on, list only the Log-on for that person.

Existing Log-on_____

_____ _____
Signature of Authorized Official date Print or Type name of Authorized Official

FMC USE ONLY

Logon_____**Initial Password**_____**ID**_____**Directory**_____
DateAsg____/____/____**AsgBy**_____ **3/01**

BILLING CODE 6730–01–C

Instructions for Form FMC–83

Instructions

Line 1. Registration. Indicate whether this is the initial (first time) registration or an amendment to an existing Service Contract Registration.

Line 2. Registrant. This must be the full legal name of the firm or individual registering for the FMC's Service Contract Filing System and any trade names. The registrant name should match the corporate charter or business license, conference membership, etc. It should be noted that the registrant name cannot be changed by the registrant after the registration without submission of an amended registration fee.

Line 3. Address of Home Office. The complete street address should be shown in addition to the post office box. Also, provide the registrant's Federal Taxpayer Identification Number (''TIN'' Number).

Line 4. Billing Address if Different. This should be completed if the billing address differs from the home office address. Show the firm name (if different from the registrant), street address and post office box (if applicable).

Line 5. Organization Number. Complete if known. (Regulated Persons Index or ''RPI'' number.)

Line 6. Registrant Type. Indicate the type of organization. A registrant cannot be more than one type. This data cannot be changed by the registrant after registration without submission of an amended registration form.

Line 7. Permissions Requested and Person Granted These Permissions. Delegation of the authority to file should be noted here.

Maintenance of Organization Record—The person listed in line 8 is authorized to access the organization maintenance functions (i.e., modify organization information, assign publishers, affiliations, and d/b/as).

Service Contract Filing—The person listed in line 8 is authorized only to submit filings.

Line 8. Certified for Batch Filing. Indicate whether the registrant was registered with software certified to perform batch filings prior to May 1, 1999. Otherwise, the registrant must first be certified for batch filing as outlined in 46 CFR part 530. After certification, the registrant can submit an amended registration form to request permission for a person in their organization to perform the batch filing. If the person already has an existing log-on, the log-on (not the password) should be listed on the registration form. Also, the certification date received from the FMC should be listed on the registration form.

By the Commission.

Bryant L. VanBrakle,

Secretary.

[FR Doc. 99–5365 Filed 3–5–99; 8:45 am]

BILLING CODE 6730–01–P

federal register

Monday
March 8, 1999

Part V

Federal Maritime Commission

46 CFR Part 520

Carrier Automated Tariff Systems; Final and Interim Rule

FEDERAL MARITIME COMMISSION

46 CFR Part 520

[Docket No. 98–29]

Carrier Automated Tariff Systems

AGENCY: Federal Maritime Commission.

ACTION: Final rule and interim final rule.

SUMMARY: The Federal Maritime Commission adds new regulations establishing the requirements for carrier automated tariff systems in accordance with the Shipping Act of 1984, as modified by Ocean Shipping Reform Act of 1998 and section 424 of the Coast Guard Authorization Act of 1998. As part of these rules, we are adopting as an interim final rule the definition of motor vehicle which was not included in the proposed rule.

DATES: This rule is effective May 1, 1999.

Comments on the interim final rule portion are due March 23, 1999.

ADDRESSES: Send comments on interim final rule portion to: Bryant L. VanBrakle, Secretary, Federal Maritime Commission, 800 North Capitol Street, N.W., Room 1046, Washington, D.C. 20573, (202) 523–5725.

FOR FURTHER INFORMATION CONTACT:

Austin L. Schmitt, Director, Bureau of Tariffs, Certification and Licensing, Federal Maritime Commission, 800 North Capitol Street, N.W., Room 940, Washington, D.C. 20573, (202) 523–5796.

Thomas Panebianco, General Counsel, Federal Maritime Commission, 800 North Capitol Street, N.W., Room 1018, Washington, D.C. 20573, (202) 523–5740.

SUPPLEMENTARY INFORMATION: On December 21, 1998, the Federal Maritime Commission (''FMC'' or ''Commission'') published a Notice of Proposed Rulemaking in the **Federal Register** (63 FR 70368), proposing new regulations to implement the changes made in the area of common carrier tariffs by enactment of the Ocean Shipping Reform Act of 1998 (''OSRA''), Public Law 105–258, 112 Stat. 1902. OSRA amended the Shipping Act of 1984 (''1984 Act''), 46 U.S.C. app. § 1702 *et seq.*, in several significant respects. Previously, common carriers and conferences had to file their tariffs (*i.e.*, the schedules of their rates and charges) with the FMC's Automated Tariff Filing and Information System (''ATFI''). Under OSRA, carriers no longer have to file with the Commission, but are required to publish their rates in private, automated tariff systems. (Section 8(a)(1) of OSRA). These tariffs must be made available electronically to any person, without limits on time, quantity, or other such limitation, through appropriate access from remote locations, and a reasonable charge may be assessed for such access, except for Federal agencies. (Section 8(a)(2)). In addition, the Commission is charged with prescribing the requirements for the ''accessibility and accuracy'' of these automated tariff systems. The Commission also can prohibit the use of such systems, if they fail to meet the requirements it establishes. (Section 8(g)).

The Commission received twenty-two comments on the Proposed Rule. Commenters were: Cargo Brokers International, Inc. (''CBI''); Household Goods Forwarders Association of America, Inc. (''HHGFAA''); China Ocean Shipping (Group) Company (''COSCO''); Fruit Shippers Ltd.; Pacific Coast Tariff Bureau (''PCTB''); Japan-United States Eastbound Freight Conference (''JUSEFC''); Council of European & Japanese National Shipowners' Associations (''CENSA''); Trans-Atlantic Conference Agreement (''TACA''); North American Van Lines, Inc. (''NAI''); Matson Navigation Company, Inc. (''Matson''); P&O Nedlloyd Limited (''P&O''); National Industrial Transportation League (''NITL''); Bicycle Shippers' Association, Inc. (''BSA''); Effective Tariff Management Corporation (''ETM''); Ocean Carrier Working Group Agreement (''OCWG''); National Association of Transportation Intermediaries (''NATI''); National Customs Brokers & Forwarders Association of America, Inc. (''NCBFAA''); American International Freight Association & Transportation Intermediaries Association (''AIFA''); Plus Integration and World Tariff Services (''WTS''); The Associated India/Pakistan Conferences (''India Conferences''); Direct Container Line, Inc. (''DCL''); and Transportation Tariff Publishers, Inc. (''TTP'').

General Comments

As a general matter, many commenters believe that the proposed rule goes far beyond what is necessary to implement the prescriptions of OSRA. CENSA contends that the rule imposes ''form and manner'' requirements, rather than requirements concerning the ''accessibility and accuracy'' of tariffs. It believes that the rule will result in elaborate and costly systems not warranted by the limited role tariffs will play in the post-OSRA era and states that how a carrier chooses to present its rates and terms of service should be dictated by market demands and customer requirements. NAI likewise believes the proposed rule far exceeds any requirements relating to accuracy and accessibility and suggests that the Commission eliminate all portions of the rule relating to tariff contents and format. Matson contends that the cost and complexity of the rule goes beyond what is reasonable and continues many ATFI requirements.

NITL notes that the Commission's role in overseeing new private tariff systems has been significantly reduced and submits that the Commission must eschew ''command and control'' type regulation and instead rely on broad standards that seek general results. It believes that a competitive market will achieve the desired result of accuracy and accessibility.

OCWG also notes that the role of tariffs under OSRA will be reduced in that the large majority of cargo will move under service contracts. It contends that the maximum use of tariffs will occur only through a minimum degree of regulation. OCWG suggests that there are two components of accessibility: (1) can a user find and gain access to a particular tariff; and (2) once in a tariff, can the user locate specific tariff matter? It claims that the Commission's rule largely perpetuates ATFI, even though many aspects of ATFI have been rendered obsolete. Lastly, OCWG alleges that carriers will be forced to rely on outside vendors to design and maintain tariffs and that a system to meet the proposed requirements would cost $500,000 or more.

The Commission is not insensitive to many of these general concerns raised by these commenters. It has accordingly kept them in mind while addressing other, more specific comments in the proposed rule.

Section 520.2 Definitions

''Co-loading''—P&O contends that this definition should include a provision that when an NVOCC tenders a co-loaded container to an ocean common carrier it certify that all NVOCCs whose cargoes are co-loaded have met all license, tariff and bonding requirements. P&O's concerns are met by § 515.27, which provides that no common carrier (*e.g.*, an NVOCC) may transport cargo for a shipper known to be an NVOCC unless the carrier has determined that the NVOCC has a tariff and financial responsibility required by sections 8 and 19 of the Act.

''Combination rate''—P&O suggests changing this term to ''multi-factor through rate'' because combination rate is allegedly not a term in general industry usage. We decline to adopt

P&O's suggestion, as the term ''combination rate'' has been defined and is widely used in current tariffs. In light of the fact that many carriers will simply carry over their current tariffs in their automated systems, this may not be the appropriate time to change the term.

''Commodity description''—P&O avers that the definition appears to require the inclusion of all applicable assessorials, which would undermine the ability of carriers to apply assessorials by rule without notation to a specific TRI. ETM also contends that the requirement to show all assessorials should be removed and that the requirement to show commodity index entries is also redundant. The Commission has adopted these suggestions and deleted the references to assessorials and commodity index entries.

''Common carrier''—Fruit Shippers suggests that this definition should be amended to include changes made by the Coast Guard Authorization Act of 1998, Pub. L. 105–383. Inasmuch as the proposed rule included this change, there is no need to amend this definition in the final rule.

''Conference''—JUSEFC submits that the current definition of conference should be retained since it substantially tracks the definition in the 1984 Act. It further notes that the Commission did not explain the reasons for the change, thereby making comment on it a matter of speculation. P&O and OCWG also argue that the definition should not be revised. The Commission will implement the definition as proposed to comport with the definitions in parts 530 (service contracts) and 535 (agreements). In that latter proceeding, the reasons for proposing such a change were fully explicated.

''Forest products''—PCTB concedes that this definition reflects Congressional intent. It nonetheless maintains that it needs some examples or the Harmonized Codes for the new additions. The Commission declines to adopt this suggestion. Examples or Harmonized Code references are not provided elsewhere in the definitions, and would not seem appropriate here.

''Harmonized system''—PCTB and WTS note that this definition only refers to the codes for imports and that language should be added for Schedule B, which applies to exports. The Commission agrees and has modified the definition accordingly.

''Intermodal transportation''—P&O suggests that the word ''through'' be inserted between the words ''continuous'' and ''transportation.'' The Commission has incorporated this change in the final rule.

''Joint rates''—P&O would change the term to ''joint through rates'' to properly reflect how the cargo is moving. However, joint rates involve ocean transportation over combined routes of two or more common carriers, and could involve combination rates or through rates. Moreover, the term is currently used widely in tariffs and will likely be carried over to automated systems. It would also benefit from notice and comment, and is not, therefore, adopted.

''Local rates''—P&O suggests that this term be changed to ''port to port rates'' as better describing the service. However, we decline to adopt this suggestion as port to port rates can be proportional rates which are based on prior or subsequent movements, contrary to the specific language of the definition, which states that local rates are not contingent on prior or subsequent movements.

''Loyalty contract''—ETM contends that this definition should not be restricted to deferred rebate arrangements, but should also include special specific rates or discount provisions. However, the definition in the proposed rule is consistent with the changes in the statutory definition made by OSRA and will therefore remain unchanged.

''Motor vehicle''—The proposed rule did not contain a definition for ''motor vehicle.'' However, OSRA's use of this term in section 8(a) of the 1984 Act may have created some confusion in the industry. The Commission has thus defined the term to include not only automobiles but also trucks, vans and other motor vehicles used for the transportation of passengers and cargo, but does not include equipment such as farm or road equipment which has wheels but whose primary purpose is other than transportation. This definition appears consistent with the discussion in the Senate Report on S. 414. S. Rep. No. 61, 105th Cong., 1st Sess. 22 (1997). Because this definition was not included in the proposed rule, however, it will go into effect as an interim final rule and interested parties will have an opportunity to comment.

''Ocean common carrier''—PCTB notes that this definition is not consistent with proposed §§ 535.104(u) and 530.3(j). WTS also suggests that the terms should be consistently applied throughout. The Commission has retained the definition in the proposed rule, but amended the service contract and agreement rules to achieve consistency.

''Person''—P&O would like the Commission to make it clear that the term ''person'' includes not only shippers, forwarders and the FMC, but ocean common carriers as well. This suggestion does not appear to be necessary. Ocean common carriers would fit within the ambit of the term as it is currently defined.

''Single factor rate''—P&O would add a definition of ''single factor rate'' to read ''the single amount charged by a common carrier in connection with through transportation involving more than one mode of service.'' This is essentially what the current definitions of ''through rate'' and ''through transportation'' do and is not, therefore, necessary.

''Through rate''—P&O would amend this definition to read ''the total amount charged by a common carrier in connection with multi-factor or single-factor through transportation.'' This change is unnecessary given that the Commission is not adopting P&O's other suggested definitional changes relating to intermodal transportation.

''Thru date''—ETM suggests that this definition should be removed, because all tariff changes can be accomplished with amendments without the use of a thru date. While we agree that tariff changes may be accomplished without the use of thru dates, there may be system reasons for using them. The term will accordingly remain defined for any carrier that chooses to use it.

P&O also suggests that definitions for ''demurrage,'' ''detention'' and ''free time'' should be added and suggests the definitions appearing in the ANERA tariff. These terms presently appear to vary considerably from carrier to carrier and can apply to either carrier equipment or the cargo. We believe that they should continue to be defined in the individual carrier's tariff and are unable to adopt these suggestions at this time. At a minimum, they would warrant additional notice and comment.

Section 520.3 Publication Responsibilities

JUSEFC and OCWG both contend that conference members should continue to have the option of publishing their open rates either in a conference tariff or their own tariffs. P&O further contends that individual carriers should be permitted to publish their own independent action rates and open rates.

Independent action rates are not presently permitted to be published in individual carrier tariffs, unlike open rates. The Commission believes that independent action rates should continue to be published in a common conference tariff. Independent action

items change frequently and would be difficult to follow if they were published in several different independent tariffs. Open rates, on the other hand, are rates for commodities over which a conference has relinquished ratemaking authority and thus more properly appear in independent tariffs. The Commission is accordingly amending paragraph (b) to indicate that conferences ''may'' publish open rates of their members, and that alternatively, open rates may be published in individual tariffs of conference members.

COSCO supports the Commission's publication on its website of the locations of carriers' tariffs. PCTB likewise supports such a listing, but suggests that the Commission adopt a specific, frequent periodic basis for updates, *e.g.*, weekly. While the Commission believes that it may be possible to update this listing on a frequent basis, it is reluctant to impose any such requirement by rule.

ETM submits that the Commission should clarify that the notification required by paragraph (d) may be by mail, courier, or facsimile. It further suggests that Form FMC–1 should appear on the Commission's website as soon as possible and supports no fee for the submission of the form. The Commission is amending paragraph (d) to indicate that Form FMC–1 be submitted electronically via the Commission's website. The Commission will design an interactive form by which carriers can submit the requisite information.[1] This approach is consistent with our treatment of marine terminal operator schedules. To the extent any carrier is unable to file pursuant to this process, it can seek a waiver from the Director, Bureau of Tariffs, Certification and Licensing (''BTCL'') to file by alternate means. In addition, the Commission notes that existing entities operating as common carriers or conferences may continue to use their current organization numbers.

BSA is concerned that the Commission may not be able to ensure that carrier tariff homepages are properly updated and the validity of all common carrier automated tariff systems. It asserts that more definitive regulations addressing webpage security requirements are needed to preserve the security and integrity of the tariff system as a whole. The Commission appreciates these concerns. However, once carriers have begun to operate under the new requirements, the Commission will be in a better position to address these issues.

Section 520.4 Tariff Contents

PCTB supports the use of specific titles in paragraph (d) to identify common rules appearing in most tariffs. It requests clarification, however, that the Commission is not requiring the numbering sequence used to display the rule titles in that paragraph. ETM recommends that the ordering or numbering of the nineteen (19) items should be at the option of the ''filer.'' WTS asserts that a significant number of retrievers use standard rule numbers to retrieve certain rules and contends that rule numbers should be mandated.

On the other hand, JUSEFC maintains that the required 19 rule titles are rigid and deprive publishers of needed flexibility. It suggests that a violation could occur from the omission of a single, non-essential word and that publishers would be prohibited from separating or consolidating tariff matter. JUSEFC further avers that tariff publishers are in the best position to determine the most effective way to present their tariff information. It concludes by suggesting that tariff titles be recommended rather than mandatory.

JUSEFC's views have merit and, as a result, the Commission is substantially amending paragraph (d). The nineteen subject areas for which specific rule titles were required have been deleted. Carriers simply have to publish any rule that affects the application of their tariffs, but they are free to use any appropriate titles for their rules.

NCBFAA states that the decision to encourage the use of the U.S. Harmonized Tariff Schedule (''HTS'') is very helpful, and promotes international acceptance of a common language. While supporting the general content requirements for all tariffs, BSA also strongly supports the FMC's encouraging the use of the U.S. HTS. DCL, on the other hand, believes that listing commodities exclusively through the U.S. HTS would be burdensome for NVOCCs. The Commission continues to believe that use of the U.S. HTS would be beneficial to trade in general. The proposed rule did not mandate use of the U.S. HTS. It simply stated that carriers should use the U.S. HTS ''to the maximum extent possible.'' However, in view of the comments, the final rule has been reworded to indicate that, if carriers use numeric codes for commodities, they are encouraged to use the U.S. HTS.

JUSEFC opposes the requirement in paragraph (e) that commodity descriptions have a distinct 10-digit numeric code. It considers such a requirement to be a carryover from ATFI, with no technological justification, given the wide variety of software allegedly available. Moreover, it contends that even under ATFI, 10-digit commodity numbering was not necessary. Matson notes that it does not use a 10-digit numbering system internally, and argues that it should be able to use its internal numbering system which interacts with its other systems. NITL opines that if a tariff uses a numeric code to identify a commodity, there is no reason to require only a 10-digit code. As long as a system permits a user to locate covered commodities, NITL sees no reason for numeric codes at all. AIFA notes that NVOCCs often offer rates for classes of commodities on a cubic meter basis, and that 10-digit codes add a needless layer of complexity.

The carrier members of OCWG also oppose 10-digit codes for commodities. They contend that any numeric code is not an indispensable requisite for a tariff and that it is unclear how such codes would assist users in locating specific tariff matter. They further suggest that very few shippers will know the code, particularly when carriers are free to use any system they wish.

In light of the above comments, the Commission is deleting the requirement that a distinct 10-digit numeric code must be used for each separate commodity in a tariff. Instead, the final rule will state that numeric codes ''may'' be used, and that publishers are encouraged to use the U.S. HTS. In addition, the definitions of ''commodity description number'' and ''TRI number'' in § 520.2 have been modified to reflect this change.

P&O suggests that the very detailed requirements of what must be included in a TRI are more detailed and complex than need be. In particular, it points to item nine (9) in paragraph (f) as being unclear and raises several questions about it. OCWG further submits that item two (2) in paragraph (f) should be revised by adding the word ''(optional).'' The Commission has adopted these suggestions in the final rule. Item 9 has been deleted, item seven (7) combined with item six (6) (''rate and rate basis'') and item 2 has been modified to point out that TRI numbers are optional.

COSCO has requested that the Commission clarify how § 520.4(e)(1) (commodity descriptions) would apply to a class rather than a commodity tariff. The Commission notes that this issue was not addressed under the ATFI rules, and that it was up to carriers and conferences to develop their own rules

[1] Form FMC–1 will be operational by April 1, 1999. This provides sufficient time for carriers to comply by May 1, 1999.

and practices under those circumstances. The Commission discerns no reason to alter this situation under OSRA.

JUSEFC contends that § 520.4(e)(3)(ii) will result in complex additional programming to generate the list of TRIs applicable to every indexed item as required separately by § 520.6(c). It states that the requirement appears to apply to ''viz'' lists, resulting in thousands of unnecessary index entries. The Commission does not consider it burdensome to require index entries for every commodity listed in a commodity description. This should not preclude tariff publishers from using commodity descriptions which are commercially developed; if they include more than one commodity within a commodity description, they simply have to show those commodities in the index.

Section 520.5 Standard Tariff Terminology

BSA supports the use of standardized codes as being consistent with Congressional intent that tariff information and tariff publishing systems be simplified and standardized. Further, BSA asserts that these codes must be enforced by the Commission for all common carriers, conferences and filing parties. NAI suggests two additional codes to the ''packaging codes'': ''Knockdown Wood Crates (KWC)'' and ''Wood Crates (WC).'' NITL, on the other hand, does not believe that standard codes should be adopted, as they are likely to become quickly outdated. JUSEFC maintains that there should be no prior approval for the use of a code not on the list. OCWG argues that approved codes are a form and manner requirement of the type the Commission no longer has authority to issue. It further contends that the proposed terminology is not commonly used in the industry by either shippers or carriers and that standard codes only make sense when all tariffs are filed in the same database.

The Commission continues to believe that the codes contained in the Appendix are the types of standardization envisioned by Congress. Moreover, we seriously doubt that the majority of codes will become quickly outdated or are not used in the industry today. Nonetheless, in light of the comments, the Commission has made several changes to paragraph (a). References to ''approved codes'' have been deleted and it has been clarified that the codes are intended to provide a standard, terminology baseline. But, rather than have the Commission consider additions to the Appendix on a case-by-case basis, the final rule provides that tariff publishers may use additional codes, if they are clearly defined in their tariffs.

PCTB notes that the National Imagery and Mapping Agency (''NIMA'') gazeteer only covers foreign locations. It suggests the use of the Geographic Names Information System (''GNIS'') for U.S. locations. The Commission has adopted this suggestion in the final rule.

The majority of the commenters objected to the requirement that locations in a tariff must appear in the NIMA gazeteer and ports in the World Port Index (''WPI''). COSCO suggests that the Commission should permit the use of new place names, if a carrier can demonstrate that they are in current usage. CENSA would eliminate entirely the requirement that foreign locations be identified with a relevant gazeteer. This would purportedly enable carriers to use simpler tariff structures. Matson likewise believes that NIMA geographic locations should be eliminated, while P&O further objects to the WPI. NITL avers that publishers should be free to use common, everyday names for ports and locations, as long as they are clear. OCWG expresses similar sentiments, questioning the need for standard location names in systems that are all different, unlike ATFI. Moreover, it claims that the use of standardized geographic names was required in ATFI because it was a government database.

In light of these comments, the Commission has amended paragraph (b) to make the use of NIMA, GNIS, or WPI advisory, rather than mandatory. In addition, the rule has been clarified to permit publishers to use geographic names that are currently in use but not yet included in these publications.

Section 520.6 Retrieval of Information

BSA supports the proposed rule's requirement that tariffs provide users with the ability to search for commodities by text or number search. It further suggests that the Commission could require tariff systems to search for various commodities by U.S. HTS or by a simple description of the commodity in question. ETM suggests that paragraph (a) be clarified to require a ''method of tariff selection.'' CENSA, on the other hand, believes that the complex tariff searching mechanisms are a burden. NITL also submits that the extensive search requirements may not be necessary. It suggests that a comprehensive text search capability, linked to a reference to the applicable basic ocean freight rate and any applicable assessorials would meet shippers' needs for accuracy and accountability. OCWG also asserts that the extensive search requirements will require carriers to expend significant sums of money and contends that tariffs can be searched by a much simpler mechanism—a text search capability. It concludes that commodities and rules could be located easily and quickly through ''key word'' searches of a tariff. OCWG also notes that, without a requirement for numeric commodity coding, there is no need for searches based on a 14-digit TRI.

After further review, we believe that the capability to search for tariff matter by text search appears to provide a sufficient degree of accessibility to tariff users at this time. As a result, paragraphs (a), (b), (c), and (d) have been amended in several aspects. Paragraph (a) sets forth general search requirements for tariff systems as a whole, while paragraph (b) limits searches for tariff matter to non-case sensitive text searches. The requirement for direct rate search by TRI number has been deleted. Paragraph (c) states that retriever selection of a specific commodity from a commodity index list will provide an option for searching for a rate. Lastly, paragraph (d) provides a text search mechanism to locate objects within an object group.

Paragraph (e) of the proposed rule required a minimum rate calculation capability for tariffs—the basic ocean freight (to include any adjustments to the basic ocean freight and inland rates for combination rates) and a list of all applicable assessorial charges, by rule number and charge title. NCBFAA supports this proposal, noting that people accessing a tariff should be able to find the ''all-in'' cost by making a single inquiry. They further contend that this would not require enormous programming expertise. NITL also supports the proposal, stating that it is important that a tariff reveal a calculated basic ocean freight rate and at least a list of all applicable assessorial charges. It views this as the ''bottom-line'' requirement for tariff accuracy that the statute requires. BSA would continue the ''bottom-line'' calculation capability currently found in ATFI.

On the other hand, COSCO asserts that the minimum rate calculation capability required by the proposed rule is just short of a bottom-line calculation and would require a considerable investment in software. Matson likewise believes that this capability would require a substantial programming effort and would cost it at least $1.6 million to develop. JUSEFC argues that the calculated basic ocean freight is contrary to OSRA and should be deleted or made a recommended feature. It questions why the Commission deems tariff users capable of reading and

calculating all assessorials, but finds them unable to read and apply rules pertaining to minimum quantities and quantity discounts. OCWG asserts that the proposed rate calculation capability requires all the functions of ATFI, except reaching a bottom-line rate, and would require ATFI-like algorithms in private systems. The carriers further contend that writing such algorithms and linking them to TRIs would be complex, time-consuming and expensive and would require the use of third party vendors. OCWG concludes by arguing that carriers should be able to provide tariff users with the charges that apply without the use of links or algorithms—by simply listing the charges that apply to all shipments in text format.

Upon reconsideration, the Commission has amended paragraph (e) by deleting the requirement for a calculated basic ocean freight and instead will require a display of the basic ocean freight rate and a list of all applicable assessorial charges. This will significantly reduce the burdens for publishers while still satisfying the requirements of OSRA. This paragraph further states that if other rules or charges may be applicable to a shipment under certain circumstances, the tariff shall so indicate. This approach should still enable a shipper to ascertain all of the charges that will be applicable to a particular shipment, without requiring carriers to engage in the calculations necessary to arrive at a calculated basic ocean freight rate.

OCWG has also proposed that the Commission eliminate the requirement in paragraph (f) that all tariff matter display the publication date and effective date. They argue that in a system with no ''access-date capacity,'' these dates do not provide any useful information. They further contend that matter appearing in a tariff as accessed would by definition be effective and applicable and that only newly filed tariff matter that has not yet become effective should show an effective date.

The Commission declines to accept this suggestion. Under the final rule, tariff systems will still have to provide access date capability to retrievers. This means that tariff users will have access to data in effect on a given date in the past and publication dates and effective dates may be of interest to them. Moreover, a tariff system without such information would make it virtually impossible for a shipper to audit its transportation costs or for the Commission to ascertain compliance with the requirements of the 1984 Act.

Section 520.7 Tariff Limitations

P&O suggests that the Commission should continue the existing practice of permitting ninety (90) days for transition from an individual tariff to a conference tariff. OCWG likewise states that new conferences and new members of conferences should have 90 days to publish their tariffs or begin participating in the conference tariff. The Commission agrees and has amended paragraph (g) accordingly. In addition, the Commission has added new language to indicate that individual conference members may still publish their own separate tariffs on open rates.

Proposed subsection (a)(3) prohibited cross-references to any other tariffs, except a tariff of general applicability maintained by that same carrier or conference. COSCO suggests that the Commission reconsider this prohibition, and permit cross-referencing as long as the other tariff is also available on-line. PCTB maintains that the Commission should allow reference to general reference tariffs (*e.g.,* IMO Dangerous Goods Code, Bureau of Explosives Tariffs), as is currently permitted, if information is provided as to where such tariffs are available for inspection. P&O also questions the reasons for the prohibition and suggests that cross-referencing should be allowed to ''another tariff to which the tariff's publisher is also the publisher or a participating carrier.'' OCWG submits that the prohibition should be eliminated or modified. It notes that in an electronic environment, moving from one tariff to another is much easier. At the least, it contends that cross-referencing for time/volume rates should be allowed.

The Commission agrees with the general thrust of these comments. As an initial matter, the cross-referencing prohibition has been limited to ''rate'' tariffs. As a result, carriers can reference other publications that are commonly used in the industry, such as general reference tariffs. In addition, the exceptions to the prohibition have been expanded to permit necessary cross-references occasioned by time/volume rate situations.

In its general comments, OCWG noted that the proposed rule is silent on how the Commission intends to deal with tariff matter that it considers deficient. It believes that ground rules would be beneficial for both the industry and the Commission's staff, and has suggested a provision which would require the Commission to seek voluntary correction of allegedly deficient tariff matter. The Commission has not adopted this suggestion in the final rule. The Commission anticipates that it will seek, under OSRA, voluntary correction of tariff matter that is unclear, incomplete or not in accordance with applicable statutory and regulatory requirements. However, the Commission does not want to hold itself to such rigid requirement in all instances.

Section 520.8 Effective Dates

COSCO, a controlled carrier, claims that the 30-day advance notice requirement for rate reductions in the bilateral trades will disadvantage it, as it will be unable to offer short-notice rate reductions to its customers, many of whom book small amounts of containers at a time. It further contends that the Commission's exemption in Petition No. P1–98 will not give it sufficient flexibility, since it only allows COSCO to meet competitors' published rates. COSCO thus urges the Commission to consider steps to mitigate the damaging effects of the 30-day notice requirement.

The Commission is unable to take any measures in this rulemaking proceeding to mitigate the effects of the 30-day notice requirement for rate reductions by controlled carriers in the bilateral trades, since such relief is outside the scope of this proceeding. Moreover, the Commission questions the appropriateness of such relief, given the fact that Congress consciously repealed the bilateral trade exemption when passing OSRA.

BSA suggests that the Commission should require the effective date of tariffs to be clearly stated on all published tariffs. While there is nothing inherently wrong with such a requirement, its need may be obviated by the fact that § 520.6(f) requires all displays of individual tariff matter to include an effective date. The Commission declines at this time to adopt BSA's suggestion.

PCTB questions the omission of the word ''charge'' from paragraph (a). It also requests clarification on whether a carrier introducing a new service which has a charge, *e.g.,* new outports subject to an arbitrary charge, can do so without a 30-day delay. The Commission has amended paragraph (a) to include the word ''charge.'' The Commission is reluctant to conclude that the introduction of such a new service should warrant across-the-board relief from the 30 days' notice requirement. Carriers desiring relief can always seek special permission pursuant to § 520.14.

Section 520.9 Access to Tariffs

CENSA supports the access requirements via dial-up or the internet. NATI, however, suggests that other

methods of access should be permitted, subject to Commission approval. ETM claims that a static internet address limits a carrier's ability to change systems or agents. ETM also suggests that proposed § 520.9(e)(3) should be amended to reflect that some carriers and conferences will use systems of their agents. ETM also questions what a reasonable fee should be and asks for confirmation that pricing matrices will be acceptable. P&O again asks clarification that ''person'' includes ocean common carriers. It also raises the specter of a large number of persons accessing a tariff slowing a site or making it unaccessible to others. P&O suggests that publishers should be free to terminate a connection that has not been active for 10 minutes. P&O also believes that the Commission should clarify that carriers can provide access without user names or passwords, and at no cost.

BSA expresses concern that the rules do not address the unauthorized tampering of websites, resulting in misinformation, and recommends that the FMC initiate an industry-wide forum to discuss and address tariff security and integrity issues. It further recommends the Commission adopt regulations aimed at persons who knowingly access and tamper with the security and integrity of a tariff.

The Commission shares BSA's concerns about tariff security and integrity. However, this rulemaking proceeding is not the proper forum within which to address such issues. Integrity issues can be revisited once the rules implementing OSRA have been in place and we have experience under them. The Commission also notes that anyone seeking to provide another method of access to tariffs could petition for a rulemaking or an exemption. The Commission does not perceive a need to adopt specific rules regarding the length of access-time that is reasonable. We note, however, that in a situation when other potential users are being denied access, it would not be unreasonable to terminate inactive connections. There is no need to indicate that carriers can provide access at no cost since they ''may'' assess a reasonable fee. The Commission further notes that there is nothing inherently suspect about pricing matrices. Lastly, the Commission has amended paragraph (g) so that user identification and passwords must be provided to the Commission only if the publisher requires them.

Section 520.10 Integrity of Tariffs

NCBFAA asserts that the five (5)-year data retention requirement in paragraph (a) is critically important to parties who need it to recall, track, and memorialize tariff information. COSCO accepts a requirement for storing historical data for 5 years, but opposes on-line storage. COSCO and Matson would like the ability to store historical data on hard copies. Matson maintains that keeping tariffs available on-line is beyond its current capabilities and that historical data is rarely required by its customers. P&O suggests that data be maintained on-line for one year, with back-up tapes or other acceptable storage medium for four (4) years. NITL also finds the 5-year requirement overly burdensome. It submits that a requirement that carriers furnish historical data for 5 years without charge to a shipper upon request should be sufficient. AIFA contends that the retention requirement will present particular problems for NVOCCs, all of whose shipments will move under tariff rates that will change often. DCL raises similar concerns. OCWG asserts that there is nothing about retaining historical data on-line that makes past or current data any more or less accurate. They maintain that the Commission and shippers can gain access to historical data off-line, by submitting a written request.

The Commission is pleased to see that all carriers accept the fact that there is a need to maintain historical tariff data for 5 years. The only issues are whether data can be stored off-line in some other form and, if so, for how long. After fully weighing the comments, the Commission concludes that a two (2)-year on-line access requirement will meet its needs and those of the shipping public while the remaining three (3) years may be kept off-line. The final rule has been so modified. In addition, if data is retained in some other electronic form, such data shall be made available to any person or the Commission within a reasonable time. The Commission is not going to define reasonable period of time at this moment, but expects carriers to respond to all requests with due diligence. In addition, carriers will be permitted to charge a reasonable fee for the provision of historical data, not to exceed the fees for obtaining such data on-line, but cannot charge any fees to federal agencies.

JUSEFC suggests that the written certification required by paragraph (e) should be deleted as unnecessary. It contends that carriers and conferences are sufficiently made responsible for the content of their tariffs by the 1984 Act and other tariff regulations. OCWG likewise contends that the certification serves no useful purpose.

The Commission nonetheless concludes that a certification requirement serves a useful purpose under the 1984 Act, as amended by OSRA. At the very least it serves as notice to a carrier or conference that the information in its tariffs must be correct and remain unaltered. Indeed, given the decision to permit off-line data retention, this certification may take on even greater significance. However, the Commission concludes that a written certification by an officer filed with it may not be necessary. Instead, the purposes of the proposed requirement can be met by publishing a similar statement with the carrier's tariff record. Accordingly, § 520.4(c) has been amended to include the requisite statement.

ETM notes that paragraph (d) of the proposed rule requires carriers to provide the Commission ''reasonable access'' to their automated systems. It states, however, that systems will require periodic routine maintenance, software upgrades and other actions that may affect accessibility, and, as such, requests that the Commission define ''reasonable access.'' The Commission recognizes that publication systems may require some down-time for the types of activities envisioned by ETM. However, we do not believe that ''reasonable access'' needs to be further limited or defined, at this point in time. If problems arise during practice, the Commission can address them in a subsequent rulemaking proceeding.

Section 520.11 Non-Vessel-Operating Common Carriers

CBI maintains that the requirement for cross-referencing on NVOCC bills of lading under carrier-to-carrier agreements should be eliminated, because there is no value-added service and it complicates OTI operations. However, the Commission is unable to make such a change at this time. The issue may be more appropriately raised in any overall review of the co-loading rules that may occur once OSRA's implementing regulations are complete.

AIFA asserts that NVOCCs need flexibility to publish extremely simple electronic tariffs in a format best suited to their individual operations. It suggests further that the Commission should conduct a rulemaking to determine whether a full or partial exemption from tariff filing is warranted for NVOCCs. DCL likewise contends that the true solution is an NVOCC exemption from tariff filing. The Commission believes that any such exemption is beyond the scope of this rulemaking proceeding. To the extent that AIFA or others seek to invoke the exemption authority under section 16 of the 1984 Act, as modified by OSRA,

they should file a petition for exemption with appropriate justification.

Section 520.12 Time/Volume Rates

OCWG endorses the proposed changes in §§ 520.12(c) and (e), as codifying existing Commission practice. It suggests, however, that language should be added to paragraph (e) to clarify that carriers are not precluded from rerating cargo in the event a shipper fails to fulfill the minimum volume requirement of a time/volume rate. The Commission agrees, and has added appropriate language to paragraph (e).

Section 520.13 Exemptions

HHGFAA points out an apparent clerical error in § 520.13(c)(5), that perpetuates a similar error in 46 C.F.R. § 514.3(b)(5). It notes that the intent of the exemption was to exempt ''civilian'' household goods moving under the International Household Goods Program administered by the General Services Administration, and, therefore, the adjective ''military'' should be deleted. The Commission agrees with this suggestion and has accordingly amended § 520.13(c)(5) in a manner consistent with HHGFAA's comment.

NAI requests that the Commission clarify that the exemption in § 520.13(c)(3) only applies to rates filed with the Military Traffic Management Command (''MTMC'') for shipments of used military household goods and personal effects for the account of the Department of Defense (''DOD''). NAI avers that this ''clarification'' is consistent with the Commission's intent when it originally adopted the exemption in 1981. Regardless of the merit to NAI's position in this matter, the Commission could not make such a change without first according an opportunity for comment to all potentially affected parties, including DOD.

Section 520.14 Special Permission

ETM suggests that the Commission should define the terms ''reasonable promptness'' in paragraph (b) and ''prompt'' in paragraph (d). The Commission does not agree. We need a certain degree of flexibility in addressing special permission applications. The Commission generally allows two weeks as reasonable, but does not wish to be constrained by a prescribed time limit.

European Inland Movements

Another issue raised by the notice of proposed rulemaking was the treatment of inland portions of through movements to Europe. The Commission noted that the European Commission (''E.C.'') prohibited conference tariffs which cover the movement of cargo to inland points in Europe and questioned whether individual tariffs of conference members covering European inland transport for the same customer utilizing a conference tariff for the U.S.-Europe ocean movement, must be published under the Act. The Commission noted that such publishing would appear consistent with the statutory requirements of the Act, to the extent they establish the European inland portion of a through rate charged by a carrier in a U.S.-Europe intermodal movement.

CENSA believes that the elimination of many of the onerous requirements in the proposed rule would reduce the burdens on carriers publishing foreign inland rates. Alternatively, it suggests that the Commission exempt foreign inland rates from these requirements. OCWG likewise believes that if its proposals are adopted, they would substantially reduce the burden of filing foreign inland rates. If its recommendations are not adopted as a whole, OCWG suggests that the Commission adopt one or more with respect to foreign inland rates, *e.g.*, exempt them from the 5-year on-line history requirement or eliminate the requirement that foreign locations appear in gazetteers.

P&O suggests that the issue more appropriately should be whether the FMC should continue to require the publication of inland rates outside of the United States. Nonetheless, it agrees with the Commission that a carrier's inland rates to/from points in Europe are required to be published under the Act. It notes that under E.C. requirements, carriers will be required to make inland rate tariffs available to shippers and presumes that they will have to maintain schedules of such charges. P&O concludes that the publication of European inland rates would not appear to be overly burdensome or expensive and urges the Commission not to consider any exemption as part of this rulemaking.

TACA notes that the E.C. ''obligation'' (to make tariffs available on request to transport users at reasonable cost or available for examination at offices of shipping lines) applies only to vessel-operating carrier members of liner conferences. It also notes that the failure of a single member of a conference to comply with the obligation could result in the withdrawal of the block exemption afforded the conference as a whole. TACA further suggests that the public tariff availability requirements of the obligation are similar to the requirements imposed by the 1961 amendments to the Shipping Act, 1916 (P.L. 87–346, 75 Stat. 762).

TACA proposes, therefore, that the Commission should adopt the identical requirements of the obligation with respect to public access to tariff matter covering European inland transport of shipments, with a prior or subsequent movement by sea between ports in Europe and the U.S. It asserts that this would completely harmonize E.C. and U.S. regulatory requirements, ensure unfettered public access to complete and accurate relevant tariff material, and would substantially ease the burdens and expenses of the proposed rules.

TACA's suggestion that the Commission accept tariff publication for European inland movements in the same manner as required under the E.C. obligation (*i.e.*, available on request or at the offices of a carrier) is a substantial deviation from the tariff publishing requirements under the 1984 Act, as amended by OSRA. At the very least, such a procedure could only be adopted after a full and complete exemption hearing pursuant to section 16 of the 1984 Act. It would further appear that the many substantive changes made to the proposed rule will alleviate many of TACA's concerns with respect to the burdens of tariff publishing for these particular movements. In addition, the Commission has recently granted TACA and the U.S. South Europe Conference special permission to cross-reference the tariffs of its individual members for European inland movements, and the Commission will continue this practice after May 1, 1999.

Transition Problems

Another issue that has been raised by several commenters is their ability to implement new private automated tariff systems by May 1, 1999. P&O notes that it is unclear whether the transition from ATFI to private systems can take effect without thirty (30) days advance publication of the system and contends that, as a result, carriers would in effect have 30 days to put their tariffs in place. OCWG raises similar concerns and notes that a waiver of the 30 days' notice requirement would only provide one additional month in which to design, develop, test and populate automated systems. CENSA avers that only a substantial reduction in the requirements will allow carriers to have their systems in place by May 1, 1999.

In light of these concerns, commenters have suggested that the Commission keep ATFI in place for various time periods, to permit a smooth transition to private systems. COSCO and P&O suggest sixty (60) days; OCWG

would extend ATFI until December 31, 1999; and ETM would have ATFI continue until such time as the new systems are ready.

The Commission declines to accept this invitation to extend ATFI. In this regard, we note that the various changes made to the proposed rule should make the transition to private tariff systems considerably easier. In addition, the Commission will give carriers an additional 30 days to meet the requirements of the rule by issuing blanket special permission for new tariffs with no increases to go into effect without the 30 days' advance notice requirement. Carriers should thus be able to meet the reduced burdens occasioned by the rule by May 1, 1999.

In accordance with the Regulatory Flexibility Act, 5 U.S.C. 601 *et seq.*, the Chairman of the Federal Maritime Commission has certified to the Chief Counsel for Advocacy, Small Business Administration, that the rule will not have a significant impact on a substantial number of small entities. In its Notice of Proposed Rulemaking, the Commission stated its intention to certify this rulemaking because the amendments will either have no affect on small entities, or in the case where the amendments are likely to impact small entities, the economic impact will be de minimis. The comments received did not dispute the Commission's intention to so certify, and, therefore, the certification is continued.

This regulatory action is not a ''major'' rule under 5 U.S.C. 804(2).

The Commission has received OMB approval for this collection of information pursuant to the Paperwork Reduction Act of 1995, as amended. In accordance with the Act, agencies are required to display a currently valid control number. The valid control number for this collection of information is 3072–0064.

List of Subjects in 46 CFR Part 520

Common carrier; Freight; Intermodal transportation; Maritime carrier; Reporting and recordkeeping requirements.

For the reasons discussed in the preamble, the Federal Maritime Commission adds Part 520 to Subchapter B, Chapter IV of 46 CFR as follows:

Add part 520 to read as follows:

PART 520—CARRIER AUTOMATED TARIFFS

Sec.

520.1 Scope and purpose.
520.2 Definitions.
520.3 Publication responsibilities.
520.4 Tariff contents.
520.5 Standard tariff terminology.
520.6 Retrieval of information.
520.7 Tariff limitations.
520.8 Effective dates.
520.9 Access to tariffs.
520.10 Integrity of tariffs.
520.11 Non-vessel-operating common carriers.
520.12 Time/Volume rates.
520.13 Exemptions and exceptions.
520.14 Special permission.
520.91 OMB control number assigned pursuant to the Paperwork Reduction Act.

Appendix A to Part 520—Standard Terminology and Codes

Authority: 5 U.S.C. 553; 46 U.S.C. app. 1701–1702, 1707–1709, 1712, 1716; and sec. 424 of Pub. L. 105–383, 112 Stat. 3411.

§ 520.1 Scope and purpose.

(a) *Scope.* The regulations of this part govern the publication of tariffs in automated systems by common carriers and conferences in the waterborne foreign commerce of the United States. They cover the transportation of property by such carriers, including through transportation with inland carriers. They implement the tariff publication requirements of section 8 of the Shipping Act of 1984 (''Act''), as modified by the Ocean Shipping Reform Act of 1998 and section 424 of Public Law 105–258.

(b) *Purpose.* The requirements of this part are intended to permit:

(1) Shippers and other members of the public to obtain reliable and useful information concerning the rates and charges that will be assessed by common carriers and conferences for their transportation services;

(2) Carriers and conferences to meet their publication requirements pursuant to section 8 of the Act;

(3) The Commission to ensure that carrier tariff publications are accurate and accessible and to protect the public from violations by carriers of section 10 of the Act; and

(4) The Commission to review and monitor the activities of controlled carriers pursuant to section 9 of the Act.

§ 520.2 Definitions.

The following definitions shall apply to this part:

Act means the Shipping Act of 1984, as amended by the Ocean Shipping Reform Act of 1998.

Amendment means any change, alteration, correction or modification of an existing tariff.

Assessorial charge means the amount that is added to the basic ocean freight rate.

BTCL means the Commission's Bureau of Tariffs, Certification and Licensing or its successor bureau.

Bulk cargo means cargo that is loaded and carried in bulk without mark or count in a loose unpackaged form, having homogeneous characteristics. Bulk cargo loaded into intermodal equipment, except LASH or Seabee barges, is subject to mark and count and is, therefore, subject to the requirements of this part.

Co-loading means the combining of cargo by two or more NVOCCs for tendering to an ocean common carrier under the name of one or more of the NVOCCs.

Combination rate means a rate for a shipment moving under intermodal transportation which is computed by the addition of a TRI, and an inland rate applicable from/to inland points not covered by the TRI.

Commission means the Federal Maritime Commission.

Commodity description means a comprehensive description of a commodity listed in a tariff, including a brief definition of the commodity.

Commodity description number means a number that may be used to identify a commodity description.

Commodity index means an index of the commodity descriptions contained in a tariff.

Commodity rate means a rate for shipping to or from specific locations a commodity or commodities specifically named or described in the tariff in which the rate or rates are published.

Common carrier means a person holding itself out to the general public to provide transportation by water of cargo between the United States and a foreign country for compensation that:

(1) Assumes responsibility for the transportation from port or point of receipt to the port or point of destination; and

(2) Utilizes, for all or part of that transportation, a vessel operating on the high seas or the Great Lakes between a port in the United States and a port in a foreign country, except that the term does not include a common carrier engaged in ocean transportation by ferry boat, ocean tramp, or chemical parcel tanker or by a vessel when primarily engaged in the carriage of perishable agricultural commodities:

(i) If the common carrier and the owner of those commodities are wholly-owned, directly or indirectly, by a person primarily engaged in the marketing and distribution of those commodities and

(ii) Only with respect to the carriage of those commodities.

Conference means an agreement between or among two or more ocean common carriers which provides for the fixing of and adherence to uniform tariff

rates, charges, practices and conditions of service relating to the receipt, carriage, handling and/or delivery of passengers or cargo for all members, but the term does not include joint service, consortium, pooling, sailing, or transshipment agreements.

Consignee means the recipient of cargo from a shipper; the person to whom a transported commodity is to be delivered.

Container means a demountable and reusable freight-carrying unit designed to be transported by different modes of transportation and having construction, fittings, and fastenings able to withstand, without permanent distortion or additional exterior packaging or containment, the normal stresses that apply on continuous all-water and intermodal transportation. The term includes dry cargo, ventilated, insulated, refrigerated, flat rack, vehicle rack, liquid tank, and open-top containers without chassis, but does not include crates, boxes or pallets.

Controlled carrier means an ocean common carrier that is, or whose operating assets are, directly or indirectly owned or controlled by a government; ownership or control by a government shall be deemed to exist with respect to any common carrier if:

(1) A majority portion of the interest in the common carrier is owned or controlled in any manner by that government, by an agency thereof, or by any public or private person controlled in any manner by that government, by any agency thereof, or by any public or private person controlled by that government; or

(2) That government has the right to appoint or disapprove the appointment of a majority of the directors, the chief operating officer or the chief executive officer of the common carrier.

Effective date means the date upon which a published tariff or tariff element is scheduled to go into effect. Where there are multiple publications to a tariff element on the same day, the last element published with the same effective date is the one effective for that day.

Expiration date means the last day after which the entire tariff or tariff element is no longer in effect.

Foreign commerce means that commerce under the jurisdiction of the Act.

Forest products means forest products including, but not limited to, lumber in bundles, rough timber, ties, poles, piling, laminated beams, bundled siding, bundled plywood, bundled core stock or veneers, bundled particle or fiber boards, bundled hardwood, wood pulp in rolls, wood pulp in unitized bales, paper and paper board in rolls or in pallet or skid-sized sheets, liquid or granular by-products derived from pulping and papermaking, and engineered wood products.

Harmonized Code means the coding provisions of the Harmonized System.

Harmonized System means the Harmonized Tariff Schedule of the United States (''U.S. HTS''), based on the international Harmonized System, administered by the U.S. Customs Service for the U.S. International Trade Commission, and Schedule B, administered by the U.S. Census Bureau.

Inland point means any city and associated state/province, country, U.S. ZIP code, or U.S. ZIP code range, which lies beyond port terminal areas. (A city may share the name of a port: the immediate ship-side and terminal area is the port, but the rest of the city is considered an inland point.)

Inland rate means a rate specified from/to an ocean port to/from an inland point, for specified modes of overland transportation.

Inland rate table means a structured matrix of geographic inland locations (points, postal codes/postal code ranges, etc.) on one axis and transportation modes (truck, rail, etc.) on the other axis, with the inland rates specified at the matrix row and column intersections.

Intermodal transportation means continuous through transportation involving more than one mode of service (e.g., ship, rail, motor, air), for pickup and/or delivery at a point beyond the area of the port at which the vessel calls. The term ''intermodal transportation'' can apply to ''through transportation (at through rates)'' or transportation on through routes using combination rates.

Joint rates means rates or charges established by two or more common carriers for ocean transportation over the combined routes of such common carriers.

Local rates means rates or charges for transportation over the route of a single common carrier (or any one common carrier participating in a conference tariff), the application of which is not contingent upon a prior or subsequent movement.

Location group means a logical collection of geographic points, ports, states/provinces, countries, or combinations thereof, which is primarily used to identify, by location group name, a group that may represent tariff origin and/or destination scope and TRI origin and/or destination.

Motor vehicle means an automobile, truck, van, or other motor vehicle used for the transportation of passengers and cargo; but does not include equipment such as farm or road equipment which has wheels, but whose primary purpose is other than transportation.

Loyalty contract means a contract with an ocean common carrier or agreement by which a shipper obtains lower rates by committing all or a fixed portion of its cargo to that carrier or agreement and the contract provides for a deferred rebate arrangement.

Ocean common carrier means a vessel-operating common carrier.

Ocean transportation intermediary means an ocean freight forwarder or a non-vessel-operating common carrier. For purposes of this part,

(1) *Ocean freight forwarder* means a person that—

(i) In the United States, dispatches shipments from the United States via a common carrier and books or otherwise arranges space for those shipments on behalf of shippers; and

(ii) Processes the documentation or performs related activities incident to those shipments; and

(2) *Non-vessel-operating common carrier* (''NVOCC'') means a common carrier that does not operate the vessels by which the ocean transportation is provided, and is a shipper in its relationship with an ocean common carrier.

Open rate means a rate on a specified commodity or commodities over which a conference relinquishes or suspends its ratemaking authority in whole or in part, thereby permitting each individual ocean common carrier member of the conference to fix its own rate on such commodity or commodities.

Organization name means an entity's name on file with the Commission and for which the Commission assigns an organization number.

Organization record means information regarding an entity, including its name, address, and organization type.

Origin scope means a location group defining the geographic range of cargo origins covered by a tariff.

Person includes individuals, firms, partnerships, associations, companies, corporations, joint stock associations, trustees, receivers, agents, assignees and personal representatives.

Point of rest means that area on the terminal facility which is assigned for the receipt of inbound cargo from the ship and from which inbound cargo may be delivered to the consignee, and that area which is assigned for the receipt of outbound cargo from shippers for vessel loading.

Port means a place at which a common carrier originates or terminates

(by transshipment or otherwise) its actual ocean carriage of cargo or passengers as to any particular transportation movement.

Project rates means rates applicable to the transportation of materials and equipment to be employed in the construction or development of a named facility used for a major governmental, charitable, manufacturing, resource exploitation and public utility or public service purpose, including disaster relief projects.

Proportional rates means rates or charges assessed by a common carrier for transportation services, the application of which is conditioned upon a prior or subsequent movement.

Publication date means the date a tariff or tariff element is published in a carrier's or conference's tariff.

Publisher means an organization authorized to publish or amend tariff information.

Rate means a price stated in a tariff for providing a specified level of transportation service for a stated cargo quantity, from origin to destination, on and after a stated effective date or within a defined time frame.

Retrieval means the process by which a person accesses a tariff via dial-up telecommunications or a network link and interacts with the carrier's or publisher's system on a transaction-by-transaction basis to retrieve published tariff matter.

Rules means the stated terms and conditions set by the tariff owner which govern the application of tariff rates, charges and other matters.

Scope means the location group(s) (geographic groupings(s)) listing the ports or ranges of ports to and from which the tariff's rates apply.

Shipment means all of the cargo carried under the terms of a single bill of lading.

Shipper means:

(1) A cargo owner;

(2) The person for whose account the ocean transportation is provided;

(3) The person to whom delivery is to be made;

(4) A shipper's association; or

(5) An NVOCC that accepts responsibility for payment of all charges applicable under the tariff or service contract.

Shippers' association means a group of shippers that consolidates or distributes freight on a nonprofit basis for the members of the group in order to secure carload, truckload, or other volume rates or service contracts.

Special permission means permission, authorized by the Commission, for certain tariff publications that do not conform with applicable regulations, usually involving effectiveness on less than statutory notice.

Tariff means a publication containing the actual rates, charges, classifications, rules, regulations and practices of a common carrier or a conference of common carriers. The term ''practices'' refers to those usages, customs or modes of operation which in any way affect, determine or change the transportation rates, charges or services provided by a common carrier or conference and, in the case of conferences, must be restricted to activities authorized by the basic conference agreement.

Tariff number means a unique 3-digit number assigned by the publisher to distinguish it from other tariffs. Tariffs may be identified by the 6-digit organization number plus the user-assigned tariff number (*e.g.*, 999999–001) or a Standard Carrier Alpha Code (''SCAC'') plus the user-assigned tariff number.

Tariff rate item (''TRI'') means a single freight rate, in effect on and after a specific date or for a specific time period, for the transportation of a stated cargo quantity, which may move from origin to destination under a single specified set of transportation conditions, such as container size or temperature.

TRI number means a number that consists of the numeric commodity code, if any, and a unique numeric suffix used to differentiate TRIs within the same commodity description. TRI numbers are not required in systems that do not use numeric commodity coding.

Through rate means the single amount charged by a common carrier in connection with through transportation.

Through transportation means continuous transportation between points of origin and destination, either or both of which lie beyond port terminal areas, for which a through rate is assessed and which is offered or performed by one or more carriers, at least one of which is a common carrier, between a United States point or port and a foreign point or port.

Thru date means the date after which an amendment to a tariff element is designated by the publisher to be unavailable for use and the previously effective tariff element automatically goes back into effect.

Time/volume rate means a rate published in a tariff which is conditioned upon receipt of a specified aggregate volume of cargo or aggregate freight revenue over a specified period of time.

Trade name means a name used for conducting business, but which is not necessarily its legal name. This is also known as a ''d/b/a'' (doing business as) name.

Transshipment means the physical transfer of cargo from a vessel of one carrier to a vessel of another in the course of all-water or through transportation, where at least one of the exchanging carriers is an ocean common carrier subject to the Commission's jurisdiction.

§ 520.3 Publication responsibilities.

(a) *General.* Unless otherwise exempted by § 520.13, all common carriers and conferences shall keep open for public inspection, in automated tariff systems, tariffs showing all rates, charges, classifications, rules, and practices between all points or ports on their own routes and on any through transportation route that has been established.

(b) *Conferences.* Conferences shall publish, in their automated tariff systems, rates offered pursuant to independent action by their members and may publish any open rates offered by their members. Alternatively, open rates may be published in individual tariffs of conference members.

(c) *Agents.* Common carriers or conferences may use agents to meet their publication requirements under this part.

(d) *Notification.* Each common carrier and conference shall notify BTCL, prior to the commencement of common carrier service pursuant to a published tariff, of its organization name, organization number, home office address, name and telephone number of firm's representative, the location of its tariffs, and the publisher, if any, used to maintain its tariffs, by electronically submitting Form FMC–1 via the Commission's website at www.fmc.gov. Any changes to the above information shall be immediately transmitted to BTCL. The Commission will provide a unique organization number to new entities operating as common carriers or conferences in the U.S. foreign commerce.

(e) *Location of tariffs.* The Commission will publish on its website, www.fmc.gov, a list of the locations of all carrier and conference tariffs. The Commission will update this list on a periodic basis.

§ 520.4 Tariff contents.

(a) *General.* Tariffs published pursuant to this part shall:

(1) State the places between which cargo will be carried;

(2) List each classification of cargo in use;

(3) State the level of ocean transportation intermediary, as defined

by section 3(17)(A) of the Act, compensation, if any, to be paid by a carrier or conference;

(4) State separately each terminal or other charge, privilege, or facility under the control of the carrier or conference and any rules or regulations that in any way change, affect, or determine any part of the aggregate of the rates or charges;

(5) Include sample copies of any bill of lading, contract of affreightment or other document evidencing the transportation agreement;

(6) Include copies of any loyalty contract, omitting the shipper's name;

(7) Contain an organization record, tariff record, and tariff rules; and

(8) For commodity tariffs, also contain commodity descriptions and tariff rate items.

(b) *Organization record.* Common carriers' and conferences' organization records shall include:

(1) Organization name;

(2) Organization number assigned by the Commission;

(3) Agreement number, where applicable;

(4) Organization type (e.g., ocean common carrier (VOCC), conference (CONF), non-vessel-operating common carrier (NVOCC) or agent);

(5) Home office address and telephone number of firm's representative;

(6) Names and organization numbers of all affiliates to conferences or agreements, including trade names; and

(7) The publisher, if any, used to maintain the organization's tariffs.

(c) *Tariff record.* The tariff record for each tariff shall include:

(1) Organization number and name, including any trade name;

(2) Tariff number;

(3) Tariff title;

(4) Tariff type (*e.g.*, commodity, rules, equipment interchange, or bill of lading);

(5) Contact person and address;

(6) Default measurement and currency units;

(7) Origination and destination scope; and

(8) A statement certifying that all information contained in the tariff is true and accurate and no unlawful alterations will be permitted.

(d) *Tariff rules.* Carriers and conferences shall publish in their tariffs any rule that affects the application of the tariff.

(e) *Commodity descriptions.* (1) For each separate commodity in a tariff, a distinct numeric code may be used. Tariff publishers are not required to use any numeric code to identify commodities, but should they choose to do so, they are encouraged to use the U.S. Harmonized Tariff Schedule (''U.S. HTS'') for both the commodity coding and associated terminology (definitions).

(2) If a tariff publisher uses a numeric code to identify commodities, the following commodity types shall be preceded by their associated 2-digit prefixes, with the remaining digits at the publisher's option:

(i) Mixed commodities—''99'';

(ii) Projects—''98''; and

(iii) non-commodities, *e.g.*, ''cargo, n.o.s.,'' ''general cargo,'' or ''freight-all kinds''—''00''.

(3) *Commodity index.* (i) Each commodity description created under this section shall have at least one similar index entry which will logically represent the commodity within the alphabetical index. Publishers are encouraged, however, to create multiple entries in the index for articles with equally valid common use names, such as, ''Sodium Chloride,'' ''Salt, common,'' etc.

(ii) If a commodity description includes two or more commodities, each included commodity shall be shown in the index.

(iii) Items, such as ''mixed commodities,'' ''projects'' or ''project rates,'' ''n.o.s.'' descriptions, and ''FAK,'' shall be included in the commodity index.

(f) *Tariff rate items.* A tariff rate item (''TRI'') is the single freight rate in effect for the transportation of cargo under a specified set of transportation conditions. TRIs must contain the following:

(1) Brief commodity description;

(2) TRI number (optional);

(3) Publication date;

(4) Effective date;

(5) Origin and destination locations or location groups;

(6) Rate and rate basis; and

(7) Service code.

(g) *Location groups.* In the primary tariff, or in a governing tariff, a publisher may define and create groups of cities, states, provinces and countries (*e.g.*, location groups) or groups of ports (*e.g.*, port groups), which may be used in the construction of TRIs and other tariff objects, in lieu of specifying particular place names in each tariff item, or creating multiple tariff items which are identical in all ways except for place names.

(h) *Inland rate tables.* If a carrier or conference desires to provide intermodal transportation to or from named points/postal regions at combination rates, it shall clearly and accurately set forth the applicable charges in an ''Inland Rate Tables'' section. An inland rate table may be constructed to provide an inland distance which is applied to a per mile rate to calculate the inland rate.

(i) *Shipper requests.* Conference tariffs shall contain clear and complete instructions, in accordance with the agreement's provisions, stating where and by what method shippers may file requests and complaints and how they may engage in consultation pursuant to section 5(b)(6) of the Act, together with a sample rate request form or a description of the information necessary for processing the request or complaint.

(j) *Inland divisions.* Common carriers are not required to state separately or otherwise reveal in tariffs the inland division of a through rate.

§ 520.5 Standard tariff terminology.

(a) *Approved codes.* The Standard Terminology Appendix contains codes for rate bases, container sizes, service, etc., and units for weight, measure and distance. They are intended to provide a standard terminology baseline for tariffs to facilitate retriever efficiency. Tariff publishers may use additional codes, if they are clearly defined in their tariffs.

(b) *Geographic names.* Tariffs should employ locations (points) that are published in the National Imagery and Mapping Agency (''NIMA'') gazetteer or the Geographic Names Information System (''GNIS'') developed by the U.S. Geological Survey. Ports published or approved for publication in the World Port Index (Pub. No. 150) should also be used in tariffs. Tariff publishers may use geographic names that are currently in use and have not yet been included in these publications.

§ 520.6 Retrieval of information.

(a) *General.* Tariffs systems shall present retrievers with the ability to:

(1) Search for commonly understood tariff objects (*e.g.*, commodities, origins, destinations, etc.) without restricting such search to a specific tariff;

(2) Search a tariff for a rate on the basis of origin, destination and commodity;

(3) Employ a tariff selection option; or

(4) Select an object group (*e.g.*, rules, locations, groups, etc.) within a particular tariff.

(b) *Search capability.* Tariffs shall provide the capability to search for tariff matter by non-case sensitive text search. Text search matches for commodity descriptions should result in a commodity or commodity index list.

(c) *Commodities and TRIs.* Retriever selection of a specific commodity from a commodity index list shall display the commodity description and provide an option for searching for a rate (*e.g.*, on

the basis of origin/destination) or a TRI list, if multiple TRIs are in effect for the commodity.

(d) *Object groups.* Retriever selection of a specific object group shall result in a list of the objects within the group or present a text search mechanism to allow location of an object within the group. For example, selection of the rules object group would present a list of the rules or a text search mechanism for locating specific terms or phrases within the rules.

(e) *Basic ocean freight.* The minimum rate display for tariffs shall consist of the basic ocean freight rate and a list of all assessorial charges that apply for the retriever-entered shipment parameters. If other rules or charges may be applicable to a shipment under certain circumstances, the tariff shall so indicate.

(f) *Displays.* All displays of individual tariff matter shall include the publication date, effective date, amendment code (as contained in Appendix A of this part) and object name or number. When applicable, a thru date or expiration date shall also be displayed. Use of ''S'' as an amendment code shall be accompanied by a Commission issued special use number.

§ 520.7 Tariff limitations.

(a) *General.* Tariffs published pursuant to this part shall:

(1) Be clear and definite;

(2) Use English as the primary textual language;

(3) Not contain cross-references to any other rate tariffs, except:

(i) A tariff of general applicability maintained by that same carrier or conference,

(ii) The individual tariffs of members of a non-conference agreement to enter into time/volume rates may cross-reference the tariffs of other members for purposes of said time/volume rates, and

(iii) Multiple common tariffs of a conference agreement to enter into time/volume rates may cross-reference their own multiple conference tariffs for purposes of said time/volume rates; and

(4) Not duplicate or conflict with any other tariff publication.

(b) *Notice of cancelation.* Carriers and conferences shall inform BTCL, in writing, whenever a tariff is canceled and the effective date of that cancelation.

(c) *Applicable rates.* The rates, charges, and rules applicable to any given shipment shall be those in effect on the date the cargo is received by the common carrier or its agent including originating carriers in the case of rates for through transportation.

(d) *Minimum quantity rates.* When two or more TRIs are stated for the same commodity over the same route and under similar conditions, and the application is dependent upon the quantity of the commodity shipped, the total freight charges assessed against the shipment may not exceed the total charges computed for a larger quantity, if the TRI specifying a required minimum quantity (either weight or measurement; per container or in containers) will be applicable to the contents of the container(s), and if the minimum set forth is met or exceeded. At the shipper's option, a quantity less than the minimum level may be freighted at the lower TRI if the weight or measurement declared for rating purposes is increased to the minimum level.

(e) *Green salted hides.* The shipping weight for green salted hides shall be either a scale weight or a scale weight minus a deduction, which amount and method of computation are specified in the commodity description. The shipper must furnish the carrier a weight certificate or dock receipt from an inland common carrier for each shipment at or before the time the shipment is tendered for ocean transportation.

(f) *Conference situations.* (1) New members of a conference shall cancel any independent tariffs applicable to the trades served by the conference, within ninety (90) days of membership in the conference. Individual conference members may publish their own separate open rate tariffs. Admission to the conference may be effective on the date notice is published in the conference tariff.

(2) New conference agreements have ninety (90) days within which to publish a new tariff.

(g) *Overcharge claims.* (1) No tariff may limit the filing of overcharge claims with a common carrier to a period of less than three (3) years from the accrual of the cause of action.

(2) The acceptance of any overcharge claim may not be conditioned upon the payment of a fee or charge.

(3) No tariff may require that overcharge claims based on alleged errors in weight, measurement or description of cargo be filed before the cargo has left the custody of the common carrier.

(h) *Returned cargo.* When a carrier or conference offers the return shipment of refused, damaged or rejected shipments, or exhibits at trade fairs, shows or expositions, to port of origin at the TRI assessed on the original movement, and such TRI is lower than the prevailing TRI:

(1) The return shipment must occur within one (1) year;

(2) The return movement must be made over the line of the same common carrier performing the original movement, except in the use of a conference tariff, where return may be made by any member line when the original shipment was carried under the conference tariff; and

(3) A copy of the original bill of lading showing the rate assessed must be presented to the return common carrier.

§ 520.8 Effective dates.

(a) *General.* (1) No new or initial rate, charge, or change in an existing rate, that results in an increased cost to a shipper may become effective earlier than thirty (30) calendar days after publication.

(2) An amendment which deletes a specific commodity and applicable rate from a tariff, thereby resulting in a higher ''cargo n.o.s.'' or similar general cargo rate, is a rate increase requiring a 30-day notice period.

(3) Rates for the transportation of cargo for the U.S. Department of Defense may be effective upon publication.

(4) Changes in rates, charges, rules, regulations or other tariff provisions resulting in a decrease in cost to a shipper may become effective upon publication.

(b) *Amendments.* The following amendments may take effect upon publication:

(1) Those resulting in no change in cost to a shipper;

(2) The canceling of a tariff due to cessation of all service by the carrier between the ports or points covered by the tariff;

(3) The addition of a port or point to a previously existing origin or destination grouping; or

(4) Changes in charges for terminal services, canal tolls, additional charges, or other provisions not under the control of the common carriers or conferences, which merely acts as a collection agent for such charges and the agency making such changes does so without notifying the tariff owner.

(c) *Controlled carriers.* Published rates by or for controlled carriers shall be governed by the procedures set forth in part 565 of this chapter.

§ 520.9 Access to tariffs.

(a) *Methods to access.* Carriers and conferences shall provide access to their published tariffs, via a personal computer (''PC''), by:

(1) Dial-up connection via public switched telephone networks (''PSTN''); or

(2) The Internet (Web) by:

(i) Web browser; or

(ii) Telnet session.

(b) *Dial-up connection via PSTN.* (1) This connection option requires that tariffs provide:

(i) A minimum of a 14.4Kbps modem capable of receiving incoming calls;

(ii) Smart terminal capability for VT–100 terminal or terminal emulation access; and

(iii) Telephone line quality for data transmission.

(2) The modem may be included in a collection (bank) of modems as long as all modems in the bank meet the minimum speed.

(c) *Internet connection.* (1) This connection option requires that systems provide:

(i) A universal resource locator (''URL'') Internet address (*e.g.*, http://www.tariffsrus.com or http://1.2.3.4); and/or

(ii) A URL Internet address (*e.g.*, telnet://tariffsrus or telnet://1.2.3.4), for Telnet session access over the Internet.

(2) Carriers or conferences shall ensure that their Internet service providers provide static Internet addresses.

(d) *Commission access.* Commission telecommunications access to systems must include connectivity via a dial-up connection over PSTNs or a connection over the Internet. Connectivity will be provided at the expense of the publishers. Any recurring connection fees, hardware rental fees, usage fees or any other charges associated with the availability of the system are the responsibility of the publisher. The Commission shall only be responsible for the long-haul charges for PSTN calls to a tariff initiated by the FMC.

(e) *Limitations.* (1) Tariffs must be made available to any person without time, quantity, or other limitations.

(2) Carriers are not required to provide remote terminals for access under this section.

(3) Carriers and conferences may assess a reasonable fee for access to their tariff publication systems and such fees shall not be discriminatory.

(4) Tariff publication systems shall provide user instructions for access to tariff information.

(f) *Federal agencies.* Carriers and conferences may not assess any access charges against the Commission or any other Federal agency.

(g) *User identifications.* Carriers and conferences shall provide the Commission with the documentation it requires and the number of user identifications and passwords it requests to facilitate the Commission's access to their systems, if they require such identifications and passwords.

§ 520.10 Integrity of tariffs.

(a) *Historical data.* Carriers and conferences shall maintain the data that appeared in their tariff publication systems for a period of five (5) years from the date such information is superseded, canceled or withdrawn, and shall provide on-line access to such data for two (2) years. After two (2) years, such data may be retained on-line or in other electronic form, and shall be made available to any person or the Commission upon request in a reasonable period of time. Carriers and conferences may charge a reasonable fee for the provision of historical data, not to exceed the fees for obtaining such data on-line. No fee shall apply to federal agencies.

(b) *Access date capability.* Each tariff shall provide the capability for a retriever to enter an access date, *i.e.*, a specific date for the retrieval of tariff data, so that only data in effect on that date would be directly retrievable. This capability would also align any rate adjustments and assessorial charges that were effective on the access date for rate calculations and designation of applicable surcharges. The access date shall also apply to the alignment of tariff objects for any governing tariffs.

(c) *Periodic review.* The Commission will periodically review published tariff systems and will prohibit the use of any system that fails to meet the requirements of this part.

(d) *Access to systems.* Carriers and conferences shall provide the Commission reasonable access to their automated systems and records in order to conduct reviews.

§ 520.11 Non-vessel-operating common carriers.

(a) *Financial responsibility.* An ocean transportation intermediary that operates as a non-vessel-operating common carrier shall state in its tariff publication:

(1) That it has furnished the Commission proof of its financial responsibility in the manner and amount required by part 515 of this chapter;

(2) The manner of its financial responsibility;

(3) Whether it is relying on coverage provided by a group or association to which it is a member;

(4) The name and address of the surety company, insurance company or guarantor issuing the bond, insurance policy, or guaranty;

(5) The number of the bond, insurance policy or guaranty; and

(6) Where applicable, the name and address of the group or association providing coverage.

(b) *Agent for service.* Every NVOCC not in the United States shall state the name and address of the person in the United States designated under part 515 of this chapter as its legal agent for service of process, including subpoenas. The NVOCC shall further state that in any instance in which the designated legal agent cannot be served because of death, disability or unavailability, the Commission's Secretary will be deemed to be its legal agent for service of process.

(c) *Co-Loading.* (1) NVOCCs shall address the following situations in their tariffs:

(i) If an NVOCC does not tender cargo for co-loading, this shall be noted in its tariff.

(ii) If two or more NVOCCs enter into an agreement which establishes a carrier-to-carrier relationship for the co-loading of cargo, then the existence of such agreement shall be noted in the tariff.

(iii) If two NVOCCs enter into a co-loading arrangement which results in a shipper-to-carrier relationship, the tendering NVOCC shall describe its co-loading practices and specify its responsibility to pay any charges for the transportation of the cargo. A shipper-to-carrier relationship shall be presumed to exist where the receiving NVOCC issues a bill of lading to the tendering NVOCC for carriage of the co-loaded cargo.

(2) *Documentation requirements.* An NVOCC which tenders cargo to another NVOCC for co-loading, whether under a shipper-to-carrier or carrier-to-carrier relationship, shall annotate each applicable bill of lading with the identity of any other NVOCC to which the shipment has been tendered for co-loading. Such annotation shall be shown on the face of the bill of lading in a clear and legible manner.

(3) *Co-loading rates.* No NVOCC may offer special co-loading rates for the exclusive use of other NVOCCs. If cargo is accepted by an NVOCC from another NVOCC which tenders that cargo in the capacity of a shipper, it must be rated and carried under tariff provisions which are available to all shippers.

§ 520.12 Time/Volume rates.

(a) *General.* Common carriers or conferences may publish in their tariffs rates which are conditioned upon the receipt of a specified aggregate volume of cargo or aggregate freight revenue over a specified period of time.

(b) *Publication requirements.* (1) All rates, charges, classifications rules and practices concerning time/volume rates must be set forth in the carrier's or conference's tariff.

(2) The tariff shall identify:

(i) The shipment records that will be maintained to support the rate; and

(ii) The method to be used by shippers giving notice of their intention to use a time/volume rate prior to tendering any shipments under the time/volume arrangement.

(c) *Accepted rates.* Once a time/volume rate is accepted by one shipper, it shall remain in effect for the time specified, without amendment. If no shipper gives notice within 30 days of publication, the time/volume rate may be canceled.

(d) *Records.* Shipper notices and shipment records supporting a time/volume rate shall be maintained by the offering carrier or conference for at least 5 years after a shipper's use of a time/volume rate has ended.

(e) *Liquidated damages.* Time/volume rates may not impose or attempt to impose liquidated damages on any shipper that moves cargo under the rate. Carriers and agreements shall rerate cargo moved at the applicable tariff rate, if a shipper fails to meet the requirements of the time/volume offer.

§ 520.13 Exemptions and exceptions.

(a) *General.* Exemptions from the requirements of this part are governed by section 16 of the Act and Rule 67 of the Commission's Rules of Practice and Procedure, § 502.67 of this chapter.

(b) *Services.* The following services are exempt from the requirements of this part:

(1) *Equipment interchange agreements.* Equipment-interchange agreements between common carriers subject to this part and inland carriers, where such agreements are not referred to in the carriers' tariffs and do not affect the tariff rates, charges or practices of the carriers.

(2) *Controlled carriers in foreign commerce.* A controlled common carrier shall be exempt from the provisions of this part exclusively applicable to controlled carriers when:

(i) The vessels of the controlling state are entitled by a treaty of the United States to receive national or most-favored-nation treatment; or

(ii) The controlled carrier operates in a trade served exclusively by controlled carriers.

(3) *Terminal barge operators in Pacific Slope states.* Transportation provided by terminal barge operators in Pacific Slope states barging containers and containerized cargo by barge between points in the United States are exempt from the tariff publication requirements of Act and the rules of this part, where:

(i) The cargo is moving between a point in a foreign country or a non-contiguous State, territory, or possession and a point in the United States;

(ii) The transportation by barge between points in the United States is furnished by a terminal operator as a service substitute in lieu of a direct vessel call by the common carrier by water transporting the containers or containerized cargo under a through bill of lading; and

(iii) Such terminal operator is a Pacific Slope state, municipality, or other public body or agency subject to the jurisdiction of the Commission, and the only one furnishing the particular circumscribed barge service in question as of January 2, 1975.

(c) *Cargo types.* The following cargo types are not subject to the requirements of this part:

(1) *Bulk cargo, forest products, etc.* This part does not apply to bulk cargo, forest products, recycled metal scrap, new assembled motor vehicles, waste paper and paper waste. Carriers or conferences which voluntarily publish tariff provisions covering otherwise exempt transportation thereby subject themselves to the requirements of this part, including the requirement to adhere to the tariff provisions.

(2) *Mail in foreign commerce.* Transportation of mail between the United States and foreign countries.

(3) *Used military household goods.* Transportation of used military household goods and personal effects by ocean transportation intermediaries.

(4) *Department of Defense cargo.* Transportation of U.S. Department of Defense cargo moving in foreign commerce under terms and conditions negotiated and approved by the Military Transportation Management Command (''MTMC'') and published in a universal service contract. An exact copy of the universal service contract, including any amendments thereto, shall be filed in paper format with the Commission as soon as it becomes available.

(5) *Used household goods—General Services Administration.* Transportation of used household goods and personal effects by ocean transportation intermediaries shipped for federal civilian executive agencies under the International Household Goods Program administered by the General Services Administration.

(d) *Services involving foreign countries.* The following transportation services involving foreign countries are not subject to the requirements of this part:

(1) *Between foreign countries.* This part does not apply to transportation of cargo between foreign countries, including that which is transshipped from one ocean common carrier to another (or between vessels of the same common carrier) at a U.S. port or transferred between an ocean common carrier and another transportation mode at a U.S. port for overland carriage through the United States, where the ocean common carrier accepts custody of the cargo in a foreign country and issues a through bill of lading covering its transportation to a foreign point of destination.

(2) *Between Canada and U.S.* The following services are exempt from the filing requirements of the Act and the rules of this part:

(i) *Prince Rupert and Alaska.* (A) *Vehicles.* Transportation by vessels operated by the State of Alaska between Prince Rupert, Canada and ports in southeastern Alaska, if all the following conditions are met:

(*1*) Carriage of property is limited to vehicles;

(*2*) Tolls levied for vehicles are based solely on space utilized rather than the weight or contents of the vehicle and are the same whether the vehicle is loaded or empty;

(*3*) The vessel operator does not move the vehicles on or off the ship; and

(*4*) The common carrier does not participate in any joint rate establishing through routes or in any other type of agreement with any other common carrier.

(B) *Passengers.* Transportation of passengers, commercial buses carrying passengers, personal vehicles and personal effects by vessels operated by the State of Alaska between Seattle, Washington and Prince Rupert, Canada, only if such vehicles and personal effects are the accompanying personal property of the passengers and are not transported for the purpose of sale.

(ii) *British Columbia and Puget Sound Ports; rail cars.(A) Through rates.* Transportation by water of cargo moving in rail cars between British Columbia, Canada and United States ports on Puget Sound, and between British Columbia, Canada and ports or points in Alaska, only if the cargo does not originate in or is not destined to foreign countries other than Canada, but only if:

(*1*) The through rates are filed with the Surface Transportation Board and/or the Canadian Transport Commission; and

(*2*) Certified copies of the rate divisions and of all agreements, arrangements or concurrences, entered into in connection with the transportation of such cargo, are filed with the Commission within 30 days of the effectiveness of such rate divisions, agreements, arrangements or concurrences.

(B) *Bulk; port-to-port.* Transportation by water of cargo moving in bulk without mark or count in rail cars on a local port-to-port rate basis between ports in British Columbia, Canada and United States ports on Puget Sound, only if the rates charged for any particular bulk type commodity on any one sailing are identical for all shippers, except that:

(*1*) This exemption shall not apply to cargo originating in or destined to foreign countries other than Canada; and

(*2*) The carrier will remain subject to all other provisions of the Act.

(iii) *Incan Superior, Ltd.* Transportation by Incan Superior, Ltd. of cargo moving in railroad cars between Thunder Bay, Ontario, and Superior, Wisconsin, only if the cargo does not originate in or is not destined to foreign countries other than Canada, and if:

(A) The through rates are filed with the Surface Transportation Board and/or the Canadian Transport Commission; and

(B) Certified copies of the rate divisions and all agreements, arrangements or concurrences entered into in connection with the transportation of such cargo are filed with the Commission within 30 days of the effectiveness of such rate divisions, agreements, arrangements or concurrences.

§ 520.14 Special permission.

(a) *General.* Section 8(d) of the Act authorizes the Commission, in its discretion and for good cause shown, to permit increases or decreases in rates, or the issuance of new or initial rates, on less than the statutory notice. Section 9(c) of the Act authorizes the Commission to permit a controlled carrier's rates, charges, classifications, rules or regulations to become effective on less than 30 days' notice. The Commission may also in its discretion and for good cause shown, permit departures from the requirements of this part.

(b) *Clerical errors.* Typographical and/or clerical errors constitute good cause for the exercise of special permission authority but every application based thereon must plainly specify the error and present clear evidence of its existence, together with a full statement of the attending circumstances, and shall be submitted with reasonable promptness after publishing the defective tariff material.

(c) *Application.* (1) Applications for special permission to establish rate increases or decreases on less than statutory notice or for waiver of the provisions of this part, shall be made by the common carrier, conference or agent for publishing. Every such application shall be submitted to BTCL and be accompanied by a filing fee of $179.

(2) Applications for special permission shall be made only by letter, except that in emergency situations, application may be made by telephone or facsimile if the communication is promptly followed by a letter and the filing fee.

(3) Applications for special permission shall contain the following information:

(i) Organization name, number and trade name of the conference or carrier;

(ii) Tariff number and title; and

(iii) The rate, commodity, or rules related to the application, and the special circumstances which the applicant believes constitute good cause to depart from the requirements of this part or to warrant a tariff change upon less than the statutory notice period.

(d) *Implementation.* The authority granted by the Commission shall be used in its entirety, including the prompt publishing of the material for which permission was requested. Applicants shall use the special case number assigned by the Commission with the symbol ''S''.

§ 520.91 OMB control number assigned pursuant to the Paperwork Reduction Act.

The Commission has received OMB approval for this collection of information pursuant to the Paperwork Reduction Act of 1995, as amended. In accordance with the Act, agencies are required to display a currently valid control number. The valid control number for this collection of information is 3072–0064.

Appendix A to Part 520—Standard Terminology and Codes

I.—PUBLISHING/AMENDMENT TYPE CODES

Code	Definition
A	Increase.
C	Change resulting in neither increase nor decrease in rate or charges.
E	Expiration (also use "A" if the deletion results in the application of a higher "cargo, n.o.s." or similar rate).
I	New or initial matter.
K	Rate or change filed by a controlled common carrier member of a conference under independent action.
M	Transportation of U.S. Department of Defense cargo by American-flag common carriers.
P	Addition of a port or point.
R	Reduction.

I.—PUBLISHING/AMENDMENT TYPE CODES—Continued

Code	Definition
S	Special Case matter filed pursuant to Special Permission, Special Docket or other Commission direction, including filing of tariff data after suspension, such as for controlled carriers. Requires "Special Case Number."
T	Terminal Rates, charges or provisions or canal tolls over which the carrier has no control.
W	Withdrawal of an erroneous publication on the same publication date.
X	Exemption for controlled carrier data in trades served exclusively by controlled carriers or by controlled carriers of states receiving most-favored-nation treatment.

II.—UNIT CODES

A. Weight Units:	
Kilograms	KGS
1000 Kgs (Metric Ton)	KT
Pounds	LBS
Long Ton (2240 LBS)	LT
Short Ton (2000 LBS)	ST
B. Volume Units:	
Cubic meter	CBM
Cubic feet	CFT
C. Length Units:	
Centimeters	CM
Feet	FT
Inches	IN
Meters	M
D. Measure Board Feet:	
Thousand Board Feet	MBF
E. Distance Units:	
Kilometers	KM
Miles	MI
F. Rate Basis:	
Ad Valorem	AV
Each	EA
Lump Sum	LS
Measure	M
Thousand Board Feet	MBF
Per Container	PC
Weight	W
Weight/Measure	WM
G. Container Size Codes:	
Not Applicable	N/A
Less Than Load	LTL
10 FT Any Height	10X
20 FT 8′6″	20
20 FT 9′0″ High Cube	20A
20 FT 9′6″ High Cube	20B
20 FT 8′0″	20S
20 FT Any Height	20X
24 FT 8′6″	24
24 FT 9′0″ High Cube	24A
24 FT 9′6″ High Cube	24B
24 FT 8′0″	24S
24 FT Any Height	24X
35 FT 8′6″	35
35 FT 9′0″ High Cube	35A
35 FT 9′6″ High Cube	35B
35 FT 8′0″	35S
35 FT Any Height	35X
40 FT 8′6″	40

II.—UNIT CODES—Continued

40 FT 9′0″ High Cube	40A
40 FT 9′6″ High Cube	40B
40 FT 8′0″	40S
40 FT Any Height	40X
42 FT 8′6″	42
42 FT 9′0″ High Cube	42A
42 FT 9′6″ High Cube	42B
42 FT 8′0″	42S
42 FT Any Height	42X
43 FT 8′6″	43
43 FT 9′0″ High Cube	43A
43 FT 9′6″ High Cube	43B
43 FT 8′0″	43S
43 FT Any Height	43X
45 FT 8′6″	45
45 FT 9′0″ High Cube	45A
45 FT 9′6″ High Cube	45B
45 FT 8′0″	45S
45 FT Any Height	45X
48 FT 8′6″	48
48 FT 9′0″ High Cube	48A
48 FT 9′6″ High Cube	48B
48 FT 8′0″	48S
48 FT Any Height	48X
53 FT 8′6″	53
53 FT 9′0″ High Cube	53A
53 FT 9′6″ High Cube	53B
53 FT 8′0″	53S
53 FT Any Height	53X
H. Container Type Codes:	
Not Applicable	N/A
Atmosphere Control	AC
Collapsible Flatrack	CF
Drop Frame	DF
Flat Bed	FB
Flat Rack	FR
Garment Container	GC
Half-Height	HH
Hardtop	HT
Insulated	IN
Open Top	OT
Dry	PC
Platform	PL
Reefer	RE
Tank	TC
Top Loader	TL
Trailer	TR
Vehicle Racks	VR
I. Container Temperature Codes:	
Not Appl/Operating	N/A
Artificial Atmo Ctrl	AC
Chilled	CLD
Frozen	FRZ
Heated	HTD
Refrigerated	RE
Ventilated	VEN
J. Packaging Codes:	
Bag	BAG
Bale	BAL
Bar	BAR
Barrel	BBL
Bundle	BDL
Beam	BEM
Bing Chest	BIC
Bin	BIN
Bulk	BLK
Bobbin	BOB
Box	BOX
Barge	BRG
Basket/Hamper	BSK
Bushel	BUS
Box, with Inner Cntn	BXI

II.—UNIT CODES—Continued

Bucket	BXT
Cabinet	CAB
Cage	CAG
Can	CAN
Carrier	CAR
Case	CAS
Cntnrs of Bulk Cargo	CBC
Carboy	CBY
Can Case	CCS
Cheeses	CHE
Core	COR
Cradle	CRD
Crate	CRT
Cask	CSK
Carton	CTN
Cylinder	CYL
Dry Bulk	DBK
Double-length Rack	DRK
Drum	DRM
Double-length Skid	DSK
Double-length	DTB
Firkin	FIR
Flo-Bin	FLO
Frame	FRM
Flask	FSK
Forward Reel	FWR
Garment on Hanger	GOH
Heads of Beef	HED
Hogshead	HGH
Hopper Car	HPC
Hopper Truck	HPT
On Hanger/Rack in bx	HRB
Half-Standard Rack	HRK
Half-Stand. Tote Bin	HTB
Jar	JAR
Keg	KEG
Kit	KIT
Knockdown Rack	KRK
Knockdown Wood Crates	KWC
Knockdown Tote Bin	KTB
Liquid Bulk	LBK
Lifts	LIF
Log	LOG
Loose	LSE
Lug	LUG
Lift Van	LVN
Multi-roll Pak	MRP
Noil	NOL
Nested	NST
Pail	PAL
Packed—NOS	PCK
Pieces	PCS
Pirns	PIR
Package	PKG
Platform	PLF
Pipe Line	PLN
Pallet	PLT
Private Vehicle	POV
Pipe Rack	PRK
Quarters of Beef	QTR
Rail (semiconductor)	RAL
Rack	RCK
Reel	REL
Roll	ROL
Reverse Reel	RVR
Sack	SAK
Shook	SHK
Sides of Beef	SID
Skid	SKD
Skid, Elev, Lift Trk	SKE
Sleeve	SLV
Spin Cylinders	SPI

II.—UNIT CODES—Continued

Spool	SPL
Tube	TBE
Tote Bin	TBN
Tank Car Rail	TKR
Tank Truck	TKT
Intermdl Trlr/Cntnr	TLD
Tank	TNK
Tierce	TRC
Trunk and Chest	TRK
Tray	TRY
Trunk, Salesmen Samp	TSS
Tub	TUB
Unpacked	UNP
Unit	UNT
Vehicles	VEH
Van Pack	VPK
On Own Wheels	WHE
Wheeled Carrier	WLC
Wood Crates	WC
Wrapped	WRP
Not Applicable	N/A
K. Shipment Stowage Location Codes:	
Not Applicable	N/A
On Deck	OD
Bottom Stowage	BS
L. Hazard Codes:	
Not Applicable	N/A
IMD Stow Category A	A
IMD Stow Category B	B
IMD Stow Category C	C
IMD Stow Category D	D
IMD Stow Category E	E
Hazardous	HAZ
Non-Hazardous	NHZ
M. Stuffing/Stripping Modes:	
Not Applicable	N/A
Mechanical	MECH
Hand Loading	HAND
N. Inland Transportation Modes:	
Not Applicable	N/A
Motor	M
Rail	R
Barge	B
Motor/Rail	MR
Rail/Motor	RM
Motor/Barge	MB
Barge/Motor	BM
Rail/Barge	RB
Barge/Rail	BR
O. Shipment Service Types:	
Barge	B
Door	D
House	H
Motor	M
Ocean Port	O
Pier	P
Rail Yard	R
Container Station	S
Terminal	T
Container Yard	Y
Rail Siding	U
Team Tracks	X
P. Freight Forwarder/Broker Type Codes:	
Not Applicable	N/A
Freight Forwarder	FF
Customs House Broker	CB
Other	OTH
Q. Tariff Type Codes:	
Bill of Lading Tariff	BL
Equipment Interchange Agreement Tariff.	EI

II.—UNIT CODES—Continued

Essential Terms Publication	ET
Foreign Commodity Tariff	FC
Foreign Rules Tariff	FR
Terminal Tariff	TM
Service Contracts	SC

By the Commission.*

Bryant L. VanBrakle,

Secretary.

[FR Doc. 99–5293 Filed 3–5–99; 8:45 am]

BILLING CODE 6730–01–P

federal register

Monday
March 8, 1999

Part VI

Federal Maritime Commission

46 CFR Parts 535 and 572

Ocean Common Carrier and Marine Terminal Operator Agreements Subject to the Shipping Act of 1984; Final Rule

FEDERAL MARITIME COMMISSION

46 CFR Parts 535 and 572

[Docket No. 98–26]

Ocean Common Carrier and Marine Terminal Operator Agreements Subject to the Shipping Act of 1984

AGENCY: Federal Maritime Commission.

ACTION: Final rule.

SUMMARY: The Federal Maritime Commission is amending its regulations governing agreements among ocean common carriers and marine terminal operators to reflect changes made to the Shipping Act of 1984 by the recently enacted Ocean Shipping Reform Act of 1998, Pub. L. 105–258. In accordance with that Act, the Commission is proposing to establish new rules for ocean carrier agreements regarding carriers' service contracts with shippers, amend the scope of marine terminal agreements subject to the Act, establish rules for agreements on freight forwarder compensation, reduce the mandatory notice period for carriers' independent action on tariff rates, and make other conforming changes. The Commission is also deleting much of its format requirements for filed agreements and making other technical amendments to the filing rules for clarity and administrative efficiency.

DATES: Effective May 1, 1999.

FOR FURTHER INFORMATION CONTACT:

Thomas Panebianco, General Counsel, Federal Maritime Commission, 800 North Capitol Street, NW., Washington, DC 20573–0001, (202) 523–5740

Florence Carr, Director, Bureau of Economics and Agreement Analysis, Federal Maritime Commission, 800 North Capitol Street, NW., Washington, DC 20573–0001, (202) 523–5787

SUPPLEMENTARY INFORMATION:

Background

On December 15, 1998, the Commission published in the **Federal Register** (63 FR 69034) a proposed rule in this proceeding to bring its rules for ocean common carrier and marine terminal operator agreements into conformity with the Ocean Shipping Reform Act, Pub. L. 105–258, 112 Stat. 1902, (''OSRA''), and the Coast Guard Authorization Act of 1998, 1999 and 2000, Pub. L. 105–383, 112 Stat. 3411. These recently enacted statutes make several changes to the Federal Maritime Commission's (''FMC'' or ''Commission'') authorities and responsibilities under the Shipping Act of 1984, 46 U.S.C. app. 1701 *et seq.* (''1984 Act''). At the same time, the Commission proposed to amend its rules to eliminate certain unnecessary formal requirements and make other clarifications and changes.

Comments in this proceeding were filed by: Fruit Shippers Ltd.; Port of Philadelphia Marine Terminal Association, Inc.; China Ocean Shipping (Group) Company (''COSCO''); P&O Nedlloyd Ltd. (''P&ON''); American Institute for Shippers'' Associations, Inc. (''AISA''); Japan-United States Eastbound Freight Conference and its Member Lines (''JUEFC''); Ocean Carrier Working Group Agreement (''Carrier Group''); National Industrial Transportation League (''NITL''); Croatia Line; Council of European & Japanese National Shipowners'' Associations (''CENSA''); Sea-Land Service, Inc.; and American President Lines, Ltd. and APL Co. Pte. Ltd. (collectively, ''APL'').

The Final Rule

The final rule redesignates the Commission's agreement rules, formerly 46 CFR part 572, as part 535, and makes changes to its authority citations to reflect OSRA's passage.

The following discussion first covers the four issues in the proposed rule that generated the most attention from commenters: (1) Proposed reporting requirements; (2) changes regarding service contracts; (3) changes in agreement form; and (4) a revised definition of ocean common carrier. Following those matters is a discussion of the remainder of the rule changes and other matters raised by the commenters.

Proposed Reporting Requirements

The Commission proposed to adopt a new reporting requirement for ocean common carriers to aid in implementing OSRA's new prohibitions in sections 10(c)(7–8), barring discrimination against ocean transportation intermediaries and shippers' associations based on status. The proposal would have required each member of an agreement to provide summary statistics on numbers of service contract ''requests,'' ''denials,'' and ''approvals,'' tallied by class of shipper.

Several commenters, including APL, Sea-Land, COSCO, JUEFC, and the Carrier Group object strongly to the Commission's proposed reporting requirements for service contracting activity. These commenters characterized the proposal as excessively burdensome or intrusive; P&O Nedlloyd estimates the annual cost of such data collection at $2 million. Sea-Land asserts that the proposed reporting categories, i.e., the terms ''requested,'' ''adopted,'' or ''denied,'' have no meaning in the context of the actual marketplace of contract negotiations. NITL echoes many of these sentiments, using examples of negotiating situations that cannot easily be characterized as ''requests'' or ''denials'' under the rule. NITL is concerned that the reporting requirements might limit flexibility in carriers' contracting processes. Sea-Land and other carrier commenters suggest that the proposed reporting requirements are outside the scope of the Commission's authority, or they have no valid regulatory purpose, inasmuch as they reach wholly individual contracting activities not within the scope of the new sections 10(c)(7–8).

AISA supports the proposed reporting requirement, suggesting that it will be minimally intrusive, and will aid the Commission in carrying out its responsibilities under section 10(b) (barring, among other things, unreasonable refusals to deal) as well as section 10(c)(7–8). AISA states that under the 1984 Act, it has been able to detect when shippers' associations have been discriminated against by conferences, and has sought ''marketplace alternatives to remedy such discrimination,'' using, among other things, its ''me-too'' rights to obtain competitive contracts. However, AISA notes that, with the absence of me-too contract rights for similarly situated shippers and the confidentiality of service contracts and agreement contract guidelines, its ability to protect itself from discrimination will be compromised. It calls the proposed reporting ''prudent,'' ''a good minimum,'' and a ''first step'' for administering the new statutory protections for intermediaries and shippers' associations.

The carriers' sweeping legal arguments that the reporting requirement exceeds the Commission's authority are unconvincing. Inasmuch as the information sought is reasonably related to the Commission's oversight responsibilities under the Act, it can defensibly be compelled by the agency under section 15 of the Shipping Act.

More persuasive, however, are many of the commenters' explanations that the proposed categories of reporting do not comport with the market realities of shipping sales practices and commercial inquiries and negotiations. After considering the examples set forth in NITL's and the carriers' comments, we believe that the proposed reporting would generate a large quantity of data of questionable utility. Shippers often

may make inquiries of, and explore negotiations with, a number of carriers (with regard to both contract and tariff rates) before making final transportation arrangements. In this environment, the proposed rule would seem likely to lead to ambiguous tallies reflecting inquiries, quotes, offers, or counteroffers.

AISA is correct that the Commission must engage in active policing if the new nondiscrimination provisions of the Act are to be given effect, as the Commission will be the only body that can compare and analyze terms of otherwise confidential contracts. However, the Commission's monitoring and enforcement resources will be better spent investigating or analyzing specific allegations or complaints about particular instances of status-based discrimination, rather than laboring over questionable market-wide statistics. Thus, the reporting provision of the proposed rule has not been finalized.

Proposed Amendments Regarding Service Contracts

The proposed rule contained provisions implementing new restrictions and requirements for carrier agreements and service contracting, as set forth in the new section 5(c) of the Shipping Act. That section states:

> Ocean common carrier agreements. An ocean common carrier agreement may not—
>
> (1) prohibit or restrict a member or members of the agreement from engaging in negotiations for service contracts with 1 or more shippers;
>
> (2) require a member or members of the agreement to disclose a negotiation on a service contract, or the terms and conditions of a service contract, other than those terms and conditions required to be published under section 8(c)(3) of this Act; or
>
> (3) adopt mandatory rules or requirements affecting the right of an agreement member or agreement members to negotiate and enter into service contracts.
>
> An agreement may provide authority to adopt voluntary guidelines relating to the terms and procedures of an agreement member's or agreement members' service contracts if the guidelines explicitly state the right of the members of the agreement to not follow these guidelines. These agreement guidelines shall be confidentially submitted to the Commission.

The proposed rule included a proposed § 535.802(a–b) indicating that the new sections 5(c)(1–2) (prohibiting restrictions on members' negotiations and requirements for members to disclose contract negotiations and terms) applied to enforceable and unenforceable agreements. It contained a definition of voluntary guidelines which limited them to ''contract terms a carrier or carriers may include in the texts of their individual contracts; or the procedures that a carrier or carriers may follow in negotiating, modifying, or terminating contracts with shipper customers.'' The proposed rule also would have barred guidelines that contained commitments, policies, or procedures for notification or pre-clearance of proposed service contract terms with other carriers or agreement officials, or imposition or acceptance of any liability or sanction whatsoever for non-compliance with contract terms.

The proposed § 535.802 is supported by AISA and NITL. NITL says it ''believes that the proposed rules generally comport with the provisions and policies of the statute, and in general correctly implement the important new restrictions imposed on collective carrier action by OSRA.'' NITL at 3. NITL suggests that the proposed section barring guidelines for auditing and pre-clearing contracts be amended to include the catch-all phrase: ''and any other commitment, policy, or procedure that would have a similar effect.''

The proposal is strenuously objected to by the Carrier Group, APL, Sea-Land, JUEFC, P&ON, and CENSA. APL states that the proposed § 535.802(a) and (b) are ''overbroad,'' because they ''forbid carriers from reaching a consensus concerning service contracts or their negotiations which restrict negotiations or require disclosure.'' APL at 1. APL asserts that carriers have a right to enter into ''lawful, independent, parallel courses of conduct with respect to service contracts.'' Under OSRA, according to APL, ''carriers may not adopt rules affecting a carrier's rights to negotiate or enter into a service contract,'' but carriers can ''discuss[] and adopt[] consciously parallel action in service contract practices.'' *Id.* at 1–2.

APL suggests that carriers must be able to offer multi-carrier service undertakings; to do that, carriers must have extensive voluntary discussions and agreements regulating that activity. APL urges that the Commission adopt the draft rule set forth in the Carrier Group's comments.

The Carrier Group states that the proposed regulations are inconsistent with OSRA, and that the proposed § 535.802(d) (which would limit voluntary guidelines to procedures between shippers and carriers, not among carriers) is in direct conflict with section 5(c) of the Act. The Carrier Group suggests that the Commission cannot place any limitation on the scope of voluntary guidelines. The only limitation on voluntary guidelines' content, according to the Carrier Group, is that they must in some way relate to the terms and procedures of service contracting; referring to Black's definition of ''related to'' and Supreme Court cases, the carriers assert that guidelines must ''stand in some relation; have bearing or concern; pertain; refer; (or) bring into association with or connection with'' service contracts.

The Carrier Group states that ''the Commission's position that any type of voluntary guidelines or procedures is contrary to the disclosure requirements in section 5(c) is unsupported'' and contrary to the legislative history. The Carrier Group cites the following passage from the Report of the Senate Committee on Commerce, Science, and Transportation on the version of OSRA reported out of that committee:

> The provisions in new section 5(b)(9) do not extend to the discussion, agreement and adoption of voluntary guidelines by agreement members concerning their negotiation and use of service contracts. Thus, nothing in this Act is intended to preclude agreement members from promulgating voluntary guidelines relating to the terms and procedures of individual service contracts, as long as those guidelines make clear that there is no penalty associated with the failure of a member to follow any such guideline.

S. Rep. 105–61, 105th Cong. 1st Sess. 21.

Sea-Land states that the authority to enter into voluntary guidelines is ''clear and unambiguous, and does not exclude any subject matter from its scope.'' Sea-Land at 1–2.

JUEFC makes similar points, stating, ''the plain wording indicates that if what is adopted is ''mandatory'' it is banned, and that if what is adopted is ''voluntary,'' it is allowed.'' JUEFC at 2. JUEFC suggests that carriers could agree to a system of sanctions for failure to adhere to service contract guidelines, as long as the sanctions were denoted as voluntary. JUEFC suggests that any issues regarding what may or may not be permissible guidelines ''should be reserved for resolution in specific cases.'' *Id.* at 3.

In light of the comments, the Commission has determined not to adopt the proposed rule regarding service contracts and voluntary guidelines. Instead, the Commission is adopting a final rule covering agreement restrictions on service contracting and voluntary guidelines that follows the language of OSRA, affording the carriers more flexibility than under the proposed rule.

No objections were raised to the proposed § 535.803, which is included in the final rule. It tracks the new statute's mandate that carriers may not

agree to limit freight forwarder compensation to less than 1.25 percent of charges, and must be allowed to take independent action on freight forwarder compensation on not more than five days' notice.

Proposed Changes Regarding Form of Agreements

The Commission proposed to eliminate many of the form and manner requirements for agreements set forth in subpart D. While this change was not mandated by OSRA, the Commission suggested that requirements for filing highly structured, tariff-type agreements seemed inconsistent with OSRA's focus on the marketplace and emphasis on commercial flexibility.

Reaction to the proposal to eliminate the form requirements for agreements was varied. APL is the sole carrier expressly in favor of the move, stating:

> We commend the Commission for removing its prior requirements for a uniform format for filed agreements. This will cure the anomalous situation in which carriers and others subject to the act entered into agreements which were commercially and legally appropriate, but then had to be rewritten in the prescribed format for the regulatory act of filing.
> * * * * *
> However, we share the concern of TSA, JUEFC, ANERA and others that any new enforcement activity by the Commission based on novel and unpublished standards as to what does or does not constitute an agreement which is properly interstitial to a filed agreement should await another rulemaking.

APL at 2. APL recognizes that the Commission's regulations, recodified at 46 CFR 535.407, provide specific guidance as to the content of filed agreements. APL is ''encouraged by the fact that these standards remain unchanged by the proposed rule, and we do not think that the Commission's elimination of the formatting requirement itself changes any of the standards of completeness by which agreements filing is to be governed.'' *Id.*

Other carrier commenters, however, objected strongly to the proposed move. Sea-Land explains:

> Sea-Land would not oppose changes in the agreement form and manner requirements if they resulted in increased flexibility or decreased burdens. What this Proposed Rule has done, however, is generate great concern that, whether intended or not, this rulemaking could create enormous uncertainty and potential regulatory infractions for what has been accepted agreement filing practice and conduct that has existed without a problem for well over a decade.

Sea-Land at 4.

P&ON, JUEFC, the Carrier Group, and CENSA also suggest that the deletion of form requirements would change the standards for the content of agreements. The Carrier Group states that ''we believe the true purpose * * * is that elimination of the form and manner requirements is, in fact, intended to require the parties to slot charter agreements to file their actual operational/administrative agreements rather than an agreement in 'FMC format.' '' Carrier Group at 13. This, according to the Carrier Group, would ''replace one set of uncertainties with another.'' Carrier Group at 14. Various carrier commenters suggest that when carriers are involved in ongoing cooperative working arrangements, they need to enter into various detailed agreements to establish the actual working particulars of the partnerships. According to the commenters, these so-called ''operational'' agreements often contain sensitive or confidential business information, are revised frequently, and generally are not filed with the Commission.

The Carrier Group asserts that the issue of operational agreements is related to the proposed deletion of form requirements:

> [O]perational/administrative agreements contain a myriad of provisions necessary for the parties to carry out the authority contained in a slot charter agreement filed with the Commission. Such provisions include, but are not limited to, slot charter hire, financial accounting, terminals to be used at each port, the name of the contact person for each party at each port, the type and size of containers to be accepted, * * * etc. Most, if not all, of these provisions are of no concern to the Commission. They have little or no anti-competitive impact. Yet, the Commission's proposed rule would require that all such provisions be publicly filed, and amended whenever changed.

Carrier Group at 16.

The Carrier Group does not explain specifically why it believes the content standards have changed. JUEFC states, however, that ''(b)y removing the list of required elements from (part) 572, this could affect future and existing agreements, including those agreements under challenge today, by prohibiting carriers from defending their agreements based on the existing regulations.'' JUEFC at 9.

APL's assessment—that elimination of the form requirements does not affect standards for content—is accurate. The deletion of the form provisions, such as ordering of provisions, page numbering, and use of appendices, does not have any impact on the issue of whether particular operational or administrative matters need to be filed with the Commission. The fact that particular provisions are required to be set forth in a fixed order does not provide carriers with a comprehensive list of particulars that must be filed in agreements, nor otherwise contribute to the certainty or clarity of agreement content requirements.[1]

Agreement content is controlled by sections of the Act and regulations that have remained unchanged. Ocean common carriers are required under section 5 of the 1984 Act to file a true copy of any agreement with respect to an activity described in section 4, unless such agreement falls within one of the narrow exceptions or exemptions set forth in the Act or the Commission's rules. The Commission's rules require that filed agreements be ''complete,'' ''in detail,'' ''clear,'' ''definite,'' and ''specific.'' 46 CFR 572.103(g) and 572.407(a). The issue of routine administrative or operational matters is addressed in an exception in 46 CFR § 572.407(c) (which is left unchanged), which states:

> Further specific agreements or understandings which are established pursuant to express enabling authority in an agreement are considered interstitial implementation and are permitted without further filing under section 5 of the Act only if the further agreement concerns routine operational or administrative matters, including the establishment of tariff rates, rules, and regulations.

The Commission has determined to adopt the approach urged by APL. First, it is proceeding at this time with the elimination of agreement form requirements. This step has no substantive effect on the content requirements for agreements. Indeed, even with form requirements eliminated, nothing bars carriers from continuing to structure their agreements as they have done under the old rules.

Second, the Commission has determined, in the face of a request from the nearly-unanimous carrier community, to institute a subsequent rulemaking on the issue of content of filed agreements. The carrier commenters apparently seek far more specific requirements as to what matters do or do not have to be filed. The

[1] The form requirements do not purport to be an exhaustive list of required content; indeed they do just the opposite. The current 46 CFR 572.403(b)(5) (which states that every agreement must have an Article 5 providing a summary of the agreement authority) states, in part:

> To the extent that the summary provided does not represent the full arrangement between the parties, additional articles or appendices of the parties' own designation and subsequent to these enumerated articles will be required to provide the specification of the authority to be exercised and the mechanics of that exercise.

Commission's rules, according to the commenters, should provide protections for confidential business information, provide maximum flexibility for carriers to modify cooperative arrangements without overly burdensome filing requirements or waiting periods, and possibly include guidance tailored for different types of agreements. These prospective issues would appear to warrant a further public airing and Commission review.

Therefore, § 535.402 is amended as follows. Sections 535.402(a–b) (paper size, margins, title page) are modified. A revised § 535.402(d) clarifies that agreements are to be signed by each individual contracting party or its designated agent, as opposed to a single official signing on behalf of the group as a whole. Inasmuch as agreements should represent the true understanding of each party, it does not appear unreasonable that the assent of each individual party should be indicated by signature. The Carrier Group and JUEFC object that this requirement may be burdensome. This does not appear correct, however, as each agreement party can, if it wishes, select the same agent for signature purposes. A revised § 535.402(d), permitting faxed or photocopied signatures, will also minimize any administrative delay.

The ordering and pagination requirements in §§ 535.402(e) and 403 are almost entirely removed. Agreements must either include or be accompanied by a table of contents, and by information such as contact names, addresses, and specific geographic scope involved. While the Commission sought to eliminate as many formalities as possible, these requirements are necessary to the expeditious processing and oversight of the agreement, and are retained in the final rule.

Section 535.404 is revised to delete the requirement that conference-specific agreement language be ordered in a particular fashion. However, the content requirements, which track section 5 of the 1984 Act's provisions, are largely retained.

The Carrier Group suggests that the use of the ''revised pages'' format for modifications, as proposed in § 535.405, is ''not consistent with how carriers necessarily structure their commercial agreements.'' No alternative approach is suggested by the group, however. Therefore, the revised page format has been retained in the final rule, as it appears from experience to be the most efficient and expedient way of processing amendments. If carriers wish to take an alternative approach, they can seek a waiver of the requirement pursuant to § 535.406. We would also again note, that the elimination of the form requirements implicitly provides carriers more flexibility to amend their understandings by filing additional agreement pages or sections, rather than revised language. Mandatory republication is eliminated, replaced with a new § 535.405(e), providing that the Commission may mandate republication when it is deemed necessary to maintain the clarity of an agreement. In addition, the waiting period exemption for miscellaneous amendments, set forth in § 535.309, is amended to remove specific form requirements.

Proposed Revised Definition of Ocean Common Carrier

The Commission proposed an amended definition of ''ocean common carrier'' to resolve uncertainty generated by the 1984 Act's definition (which simply is ''a vessel-operating common carrier'') and clarify the regulatory dividing line between ocean common carriers and non-vessel-operating common carriers (''NVOCCs'').

Croatia Line objects to the proposed definition of ''ocean common carrier.'' Among other things, Croatia Line represents that the Commission provided inadequate notice by including this issue in a short-notice OSRA rulemaking. Both Croatia Line and CENSA suggest that the definition should be broadened to include a vessel operator that provides service to the U.S. pursuant to a transshipment arrangement, even if the carrier only operates the foreign-to-foreign leg of the service.

The Commission believes that, given the brevity of the comment period in this proceeding and the paucity of comments received on this issue, it would be useful to provide an additional opportunity for interested parties to comment. The Commission would also benefit from more time to consider the merits of this issue. A separate notice seeking additional comments in a further rulemaking proceeding will be issued shortly. [2]

Other Proposed Changes

Redesignated § 535.102 is amended to reflect that marine terminal agreements are no longer limited to solely international commerce.

The definition of ''common carrier'' in § 535.104(f) is amended to reflect changes made in the 1984 Act by section 424(d) of the Coast Guard Authorization Act. That act inserted a qualified exception in the definition for certain vessels carrying perishable agricultural commodities.

The definition of ''conference agreement,'' in redesignated § 535.104(g), is changed to clarify that the term (and the rule sections that apply it, such as the mandatory independent action requirements) extends only to ocean common carrier conferences, and not to marine terminal conferences, which are defined elsewhere in this part. The definition is also changed to eliminate two elements that do not appear to correspond with the statutory text: (1) The requirement that, to be a conference, carriers must agree to collective administrative affairs, and (2) the statement that carriers may have a common tariff and must participate in some tariff.

The Carrier Group states that there is no statutory need to change the definition in the regulations of ''conference agreement,'' and opposes the proposed definition, saying that it could create ''unintended results.'' Carrier Group at 24. The definition does need to be changed, however, to comport with OSRA. Under the new Act, agreements other than conferences can enter into service contracts. The members of these agreements must, as a matter of course, agree to fix and adhere to those service contract rates that they have in common. Under the old definition (which said ''conference agreement means an agreement * * * which provides for: (1) The fixing of and adherence to uniform rates, charges * * *'') an agreement such as a vessel sharing agreement that offered joint service contracts would seem to be classified as a conference, undermining Congress's intentions. Therefore, the definition was amended to make clear that conferences provided for the fixing of and adherence to *tariff* (not service contract) rates.

The Carrier Group appears to object to removing the references to ''utiliz(ing) a common tariff'' from the current definition. However, the deleted clause appeared to add nothing to the old definition, insofar as it said that conference carriers ''*may*'' (but do not

[2] Croatia Line incorrectly asserts that the Commission is proposing a change in policy. As explained in the proposed rule, the proposed definition is a codification of the Commission's longstanding, but uncodified, policy. That the Commission has taken no enforcement action against Croatia Line in connection with its recently filed agreements is not an indication of a proposed policy shift. Rather, the Commission is seeking to ensure that it had provided the maximum opportunity for notice and comment on its longstanding policy in a rulemaking context before considering specific enforcement action against any one carrier. In deferring the issue to a separate proceeding, the Commission is in no way adopting or endorsing Croatia Line's interpretation of the law or its characterization of its own status, but rather is seeking to be as procedurally fair and inclusive as possible.

have to) use a common tariff, but *must* participate in some tariff. While this seems to be an accurate synopsis of the Act's tariff publication rule, it does not appear to be an integral component of the definition of ''conference.'' The revised definition will not, as the Carrier Group suggests without elaboration, subject other carrier agreements to various statutory requirements set forth in section 5(b) of the Act. *Id.*

The definition of ''effective agreement'' in redesignated § 535.104(j) is changed to remove references to the Shipping Act, 1916, and the definition of ''information form'' in paragraph (m) is amended to clarify that it extends to some types of agreement modifications. ''Marine terminal operator'' is redefined in paragraph (q) to accord with the new definition in OSRA, and the definition of NVOCC is removed.

OSRA's changes regarding jurisdiction over marine terminal operators are also reflected in redesignated § 535.201, the list of agreements subject to the Act. Also in that section, the reference to cooperative working agreements with non-vessel-operating common carriers, is deleted in accordance with OSRA. Also, references to NVOCC and freight forwarder agreements are removed from the non-subject agreements section, redesignated § 535.202(f) and (g).

The exemption provisions in redesignated § 535.301 are changed to comport with the new law's more liberal standard. The exemption procedures are being moved to a general exemption section in the Commission's Rules of Practice and Procedure, 46 CFR part 502.

In the marine terminal agreements exemption, redesignated § 535.307, the definition of ''marine terminal conference'' in paragraph (b) is amended to reflect that such agreements do not have to involve solely international commerce. Also, the extraneous references to collective administrative affairs and tariff filing are removed (as with the definition of ''conference agreement'' in redesignated § 535.104(g)). In the marine terminal services exemption in redesignated § 535.310, a definition of marine terminal services is incorporated in paragraph (a), and paragraph (a)(2), which excepts previously filed agreements from the exemption, is removed.

Redesignated § 535.501(a) is amended, and a new § 535.503(b) is added to make clear that agreement modifications that expand the geographic scope or change the class designation of the underlying agreement must be accompanied by an appropriate information form. At NITL's suggestion, the reference in § 535.502(a)(5) to ''regulation or discussion of service contracts'' is changed to ''discussion or agreement on service contracts,'' to more closely track the text of OSRA. Also, redesignated § 535.706(c)(1) is amended to accord with OSRA's changed tariff requirements.

The mandatory provisions for independent action for conferences in redesignated § 535.801 are changed to reflect that shortened notice period, from ten to five days. The rules are amended to reflect the statutory change that conferences must allow independent action on all rates and service items, not just those required to be included in tariffs. That is, if a conference fixes a rate on a commodity exempt from tariff publication, for example, waste paper, it must allow members to take independent action on the waste paper rates. If the conference publishes a waste paper rate in its tariff (it does not have to, but it can do so voluntarily), then it must publish the member's IA waste paper rates as well. Section 535.801(i), a transitional provision that applied to the 90-day period immediately after the IA rules were adopted, is deleted.

In its comments, the Port of Philadelphia seeks confirmation of its view of the relationship between the Commission's agreement rules and its regulations for marine terminal operator schedules. The port's observations are correct, as discussed in more detail in the final rule in Docket No. 98–27.

P&ON suggests that the Commission broaden the exception to the 45-day waiting period when new parties are added to pre-existing agreements. It also suggests that a new process be implemented to effect name changes in multiple agreements. Both of these suggestions could have some merit, and will be noticed for comment in a subsequent rulemaking proceeding.

The Carrier Group recommends that the Commission take this opportunity to eliminate its current Class A reporting requirements for high market share rate agreements. However, that reporting requirement (adopted less than three years ago) provides information that is indispensable for the Commission's ongoing oversight of potentially substantially anticompetitive agreements, pursuant to the 6(g) standard. Any modifications in the current agreement monitoring program based on changed market conditions will be considered only after an opportunity to evaluate the competitive effects of OSRA's regulatory changes.

In accordance with the Regulatory Flexibility Act, 5 U.S.C. 601 *et seq.*, the Chairman of the Federal Maritime Commission has certified to the Chief Counsel for Advocacy, Small Business Administration, that the rule will not have a significant impact on a substantial number of small entities. In its Notice of Proposed Rulemaking, the Commission stated its intention to certify this rulemaking because the proposed changes affect only ocean common carriers, marine terminal operators, and passenger vessel operators, entities the Commission has determined do not come under the programs and policies mandated by the Small Business Regulatory Enforcement Fairness Act. As no commenter refuted this determination, the certification remains unchanged.

The Commission has received Office of Management and Budget (OMB) approval for the collection of this information required in this part. Section 530.991 displays the control numbers assigned by OMB to information collection requirements of the Commission in this part by the pursuant to the Paperwork Reduction Act of 1995, as amended. In accordance with that Act, agencies are required to display a currently valid control number. In this regard, the valid control number for this collection of information is 3072–0045.

This regulatory action is not a ''major rule'' under 5 U.S.C. 804(2).

List of Subjects in 46 CFR Parts 535 and 572

Administrative practice and procedure; Maritime carriers; Reporting and recordkeeping requirements.

Therefore, for the reasons set forth above, part 572, subchapter C of Title 46, Code of Federal Regulations, is redesignated and amended as follows:

PART 572—AGREEMENTS BY OCEAN COMMON CARRIERS AND OTHER PERSONS SUBJECT TO THE SHIPPING ACT OF 1984 [REDESIGNATED AS PART 535 AND AMENDED]

1. The authority citation for part 572 [redesignated as part 535] is amended to read as follows:

Authority: 5 U.S.C. 553, 46 U.S.C. app. 1701–1707, 1709–1710, 1712 and 1714–1717, Pub. L. 104–88, 109 Stat. 803.

2. Redesignate part 572 as part 535 of subchapter B, chapter IV of 46 CFR.

3. Revise redesignated § 535.101 to read as follows:

§ 535.101 Authority.

The rules in this part are issued pursuant to the authority of section 4 of the Administrative Procedure Act (5 U.S.C. 553), sections 2, 3, 4, 5, 6, 7, 8, 10, 11, 13, 15, 16, 17 and 19 of the Shipping Act of 1984 (''the Act''), and the Ocean Shipping Reform Act of 1998, Pub. L. 104–88, 109 Stat. 803.

§ 535.102 [Amended]

4. Amend redesignated § 535.102 to remove the parenthetical phrase ''(to the extent the agreements involve ocean transportation in the foreign commerce of the United States).''

5. Amend redesignated § 535.103 to add paragraph (h) to read as follows:

§ 535.103 Policies.

* * * * *

(h) In order to promote competitive and efficient transportation and a greater reliance on the marketplace, the Act places limits on carriers' agreements regarding service contracts. Carriers may not enter into an agreement to prohibit or restrict members from engaging in contract negotiations, may not require members to disclose service contract negotiations or terms and conditions (other than those required to be published), and may not adopt mandatory rules or requirements affecting the right of an agreement member or agreement members to negotiate and enter into contracts. However, agreement members may adopt voluntary guidelines covering the terms and procedures of members' contracts.

6. Amend redesignated § 535.104 as follows: paragraphs (f), (g), (j), (m) and (q) are revised, paragraph (u) is removed, paragraphs (v), (w), (x), (y), (z), (aa), (bb) and (cc) are redesignated (u), (v), (w), (x), (y), (z), (aa) and (bb), paragraph (dd) is redesignated (cc) and revised, paragraph (ee) is redesignated (dd), redesignated paragraph (dd) is revised, paragraphs (ff), (gg), (hh), (ii), (jj), and (kk) are redesignated (ee), (ff), (gg), (hh), (ii) and (jj), as follows:

§ 535.104 Definitions.

* * * * *

(f) *Common carrier* means a person holding itself out to the general public to provide transportation by water of passengers or cargo between the United States and a foreign country for compensation that:

(1) Assumes responsibility for the transportation from the port or point of receipt to the port or point of destination; and

(2) Utilizes, for all or part of that transportation, a vessel operating on the high seas or the Great Lakes between a port in the United States and a port in a foreign country, except that the term does not include a common carrier engaged in ocean transportation by ferry boat, ocean tramp, or chemical parcel tanker, or by a vessel when primarily engaged in the carriage of perishable agricultural commodities:

(i) If the common carrier and the owner of those commodities are wholly owned, directly or indirectly, by a person primarily engaged in the marketing and distribution of those commodities; and

(ii) Only with respect to those commodities.

(g) *Conference agreement* means an agreement between or among two or more ocean common carriers which provides for the fixing of and adherence to uniform tariff rates, charges, practices and conditions of service relating to the receipt, carriage, handling and/or delivery of passengers or cargo for all members. The term does not include joint service, pooling, sailing, space charter, or transshipment agreements.

* * * * *

(j) *Effective agreement* means an agreement effective under the Act.

* * * * *

(m) *Information form* means the form containing economic information which must accompany the filing of certain kinds of agreements and agreement modifications.

* * * * *

(q) *Marine terminal operator* means a person engaged in the United States in the business of furnishing wharfage, dock, warehouse, or other terminal facilities in connection with a common carrier, or in connection with a common carrier and a water carrier subject to subchapter II of chapter 135 of Title 49 U.S.C. This term does not include shippers or consignees who exclusively furnish marine terminal facilities or services in connection with tendering or receiving proprietary cargo from a common carrier or water carrier.

* * * * *

(cc) *Service contract* means a written contract, other than a bill of lading or a receipt, between one or more shippers and an individual ocean common carrier or an agreement between or among ocean common carriers in which the shipper or shippers make a commitment to provide a certain volume or portion of cargo over a fixed time period, and the ocean common carrier or the agreement commits to a certain rate or rate schedule and a defined service level—such as assured space, transit time, port rotation, or similar service features. The contract may also specify provisions in the event of nonperformance on the part of any party.

(dd) *Shipper* means:

(1) A cargo owner;

(2) The person for whose account the ocean transportation is provided;

(3) The person to whom delivery is to be made;

(4) A shippers' association; or

(5) A non-vessel-operating common carrier (i.e., a common carrier that does not operate the vessels by which the ocean transportation is provided and is a shipper in its relationship with an ocean common carrier) that accepts responsibility for payment of all charges applicable under the tariff or service contract.

* * * * *

7. Amend redesignated § 535.201 to revise paragraphs (a)(5), (a)(6), (a)(7) and (b) to read as follows:

§ 535.201 Subject agreements.

(a) * * *

(5) Engage in exclusive, preferential, or cooperative working arrangements among themselves or with one or more marine terminal operators;

(6) Control, regulate, or prevent competition in international ocean transportation; or

(7) Discuss and agree on any matter related to service contracts.

(b) *Marine terminal operator agreements.* This part applies to agreements among marine terminal operators and among one or more marine terminal operators and one or more ocean carriers to:

(1) Discuss, fix, or regulate rates or other conditions of service; or

(2) Engage in exclusive, preferential, or cooperative working arrangements, to the extent that such agreements involve ocean transportation in the foreign commerce of the United States.

8. Amend redesignated § 535.202 to revise paragraphs (d) and (e) and to remove paragraphs (f) and (g) to read as follows:

§ 535.202 Non-subject agreements.

* * * * *

(d) Any agreement among common carriers to establish, operate, or maintain a marine terminal in the United States; and

(e) Any agreement among marine terminal operators which exclusively and solely involves transportation in the interstate commerce of the United States.

9. Amend redesignated § 535.301 to revise paragraphs (a) and (c), to remove paragraphs (d) and (e), and to redesignate paragraph (f) as paragraph (d) to read as follows:

§ 535.301 Subject agreements.

(a) *Authority.* The Commission, upon application or its own motion, may by order or rule exempt for the future any class of agreements between persons subject to the Act from any requirement of the Act if it finds that the exemption will not result in substantial reduction in competition or be detrimental to commerce.

* * * * *

(c) *Application for exemption.* Applications for exemptions shall conform to the general filing requirements for exemptions set forth at § 502.67 of this title.

* * * * *

10. Amend redesignated § 535.307 to revise paragraph (b) to read as follows:

§ 535.307 Marine terminal agreements—-exemption.

* * * * *

(b) Marine terminal conference agreement means an agreement between or among two or more marine terminal operators and/or ocean common carriers for the conduct or facilitation of marine terminal operations which provides for the fixing of and adherence to uniform maritime terminal rates, charges, practices and conditions of service relating to the receipt, handling, and/or delivery of passengers or cargo for all members.

* * * * *

11. Amend redesignated § 535.309 to revise paragraphs (a)(2) to read as follows:

§ 535.309 Miscellaneous modifications to agreements—exemptions.

(a) * * *

(2) Any modification to the following:

(i) Parties to the agreement (limited to conference agreements, voluntary ratemaking agreements having no other anticompetitive authority (e.g., pooling authority or capacity reduction authority), and discussion agreements among passenger vessel operating common carriers which are open to all ocean common carriers operating passenger vessels of a class defined in the agreements and which do not contain ratemaking, pooling, joint service, sailing or space chartering authority).

(ii) Officials of the agreement and delegations of authority.

(iii) Neutral body policing (limited to the description of neutral body authority and procedures related thereto).

* * * * *

12. Amend redesignated § 535.310 to revise paragraph (a) to read as follows:

§ 535.310 Marine terminal services agreements—exemptions.

(a) *Marine terminal services agreement* means an agreement, contract, understanding, arrangement or association, written or oral (including any modification, cancellation or appendix) between a marine terminal operator and an ocean common carrier that applies to marine terminal services, including checking; dockage; free time; handling; heavy lift; loading and unloading; terminal storage; usage; wharfage; and wharf demurrage and including any marine terminal facilities which may be provided incidentally to such marine terminal services) that are provided to and paid for by an ocean common carrier. The term ''marine terminal services agreement'' does not include any agreement which conveys to the involved carrier any rights to operate any marine terminal facility by means of a lease, license, permit, assignment, land rental, or similar other arrangement for the use of marine terminal facilities or property.

* * * * *

13. Amend redesignated § 535.402 to revise paragraphs (a), (b) introductory text, (d) and (e) and remove paragraphs (f) and (g) to read as follows:

§ 535.402 Form of agreements.

* * * * *

(a) Agreements shall be clearly and legibly written. Agreements in a language other than English shall be accompanied by an English translation.

(b) Every agreement shall include or be accompanied by a title page indicating:

* * * * *

(d) Each agreement and/or modification filed will be signed in the original by an official or authorized representative of each of the parties and shall indicate the typewritten full name of the signing party and his or her position, including organizational affiliation. Faxed or photocopied signatures will be accepted if replaced with an original signature as soon as practicable before the effective date.

(e) Every agreement shall include or be accompanied by a Table of Contents providing for the location of all agreement provisions.

14. Revise redesignated § 535.403 to read as follows:

§ 535.403 Agreement provisions.

If the following information (necessary for the expeditious processing of the agreement filing) does not appear fully in the text of the agreement, it shall be indicated in an attachment or appendix to the agreement, or on the title page:

(a) *Details regarding parties.* Indicate the full legal name of each party, including any FMC-assigned agreement number associated with that name; and the address of its principal office (to the exclusion of the address of any agent or representative not an employee of the participating carrier or association).

(b) *Geographic scope of the agreement.* State the ports or port ranges to which the agreement applies and any inland points or areas to which it also applies with respect to the exercise of the collective activities contemplated and authorized in the agreement.

(c) *Officials of the agreement and delegations of authority.* Specify, by organizational title, the administrative and executive officials determined by the parties to the agreement to be responsible for designated affairs of the agreement and the respective duties and authorities delegated to those officials. At a minimum, specify:

(1) The officials with authority to file agreements and agreement modifications and to submit associated supporting materials or with authority to delegate such authority; and

(2) A statement as to any designated U.S. representative of the agreement required by this chapter.

15. Revise redesignated § 535.404 to read as follows:

§ 535.404 Organization of conference and interconference agreements.

(a) Each conference agreement shall include the following:

(1) *Neutral body policing.* State that, at the request of any member, the conference shall engage the services of an independent neutral body to fully police the obligations of the conference and its members. Include a description of any such neutral body authority and procedures related thereto.

(2) *Prohibited acts.* State affirmatively that the conference shall not engage in conduct prohibited by section 10(c)(1) or 10(c)(3) of the Act.

(3) *Consultation: Shippers' requests and complaints.* Specify the procedures for consultation with shippers and for handling shippers' requests and complaints.

(4) *Independent action.* Include provisions for independent action in accordance with § 535.801 of this part.

(b)(1) Each agreement between carriers not members of the same conference must provide the right of independent action for each carrier.

(2) Each interconference agreement must provide the right of independent action for each conference and specify the procedures therefor.

16. Amend redesignated § 535.405 to revise paragraphs (a), (b), (c), (d) and (e),

and to remove paragraphs (f) and (g) to read as follows:

§ 535.405 Modification of agreements.

* * * * *

(a) Agreement modifications shall be: filed in accordance with the provisions of § 535.401 and in the format specified in § 535.402.

(b) Agreement modifications shall be made by reprinting the entire page on which the matter being changed is published (''revised pages''). Revised pages shall indicate the consecutive denomination of the revision (e.g., ''1st Revised Page 7''). Additional material may be published on a new original page. New pages inserted between existing pages shall be numbered with an appropriate suffix (e.g., a page inserted between page 7 and page 8 shall be numbered 7a, 7.1, or similarly).

(c) If the modification is made by the use of revised pages, the modification shall be accompanied by a page, submitted for illustrative purposes only, indicating the language being modified in the following manner (unless such marks are apparent on the face of the agreement):

(1) Language being deleted or superseded shall be struck through; and,

(2) New and initial or replacement language shall immediately follow the language being superseded and be underlined.

(d) If a modification requires the relocation of the provisions of the agreement, such modification shall be accompanied by a revised Table of Contents page which shall report the new location of the agreement's provisions.

(e) When deemed necessary to ensure the clarity of an agreement, the Commission may require parties to republish their entire agreement, incorporating such modifications as have been made. No Information Form requirements apply to the filing of a republished agreement.

17. Revise redesignated § 535.501 paragraph (a) to read as follows:

§ 535.501 General requirements.

(a) Certain agreement filings must be accompanied with an Information Form setting forth information and data on the filing parties' prior cargo carryings, revenue results and port service patterns.

* * * * *

18. Amend redesignated § 535.502 to revise paragraphs (a)(1), (a)(3), (a)(4), (a)(5), (b)(1), and (b)(2) to read as follows:

§ 535.502 Subject agreements.

* * * * *

(a) * * *

(1) A rate agreement as defined in § 535.104(aa);

(2) * * * * *

(3) A pooling agreement as defined in § 535.104(x);

(4) An agreement authorizing discussion or exchange of data on vessel-operating costs as defined in § 535.104(jj); or

(5) An agreement authorizing regulation or discussion of service contracts as defined in § 535.104(cc).

(b) * * *

(1) A sailing agreement as defined in § 535.104(bb); or

(2) A space charter agreement as defined in § 535.104(gg).

19. Amend redesignated § 535.503 to redesignate the introductory text as paragraph (a) and to add new paragraph (b) to read as follows:

§ 535.503 Information form for Class A/B agreements.

(a) * * *

(b) Modifications to Class A/B agreements that expand the geographic scope of the agreement or modifications to Class C agreements that change the class of the agreement from C to A/B must be accompanied by an Information Form for Class A/B agreements.

20. Amend redesignated § 535.706 by revising paragraph (c)(1) to read as follows:

§ 535.706 Filing of minutes—-including shippers' requests and complaints, and consultations.

* * * * *

(c) * * *

(1) Rates that, if adopted, would be required to be published in the pertinent tariff except that this exemption does not apply to discussions limited to general rate policy, general rate changes, the opening or closing of rates, or service or time/volume contracts; or

* * * * *

21. Revise the heading of Subpart H to read as follows:

Subpart H—Mandatory and Prohibited Provisions

22. Amend redesignated § 535.801 by: Revising paragraphs (a), (b)(1), (d), (e), the final sentence of paragraph(f)(1), and (f)(2); removing paragraph (i); and redesignating paragraphs (j) as (i) and (k) as (j), to read as follows:

§ 535.801 Independent action.

(a) Each conference agreement shall specify the independent action (''IA'') procedures of the conference, which shall provide that any conference member may take independent action on any rate or service item upon not more than 5 calendar days' notice to the conference and shall otherwise be in conformance with section 5(b)(8) of the Act.

(b)(1) Each conference agreement that provides for a period of notice for independent action shall establish a fixed or maximum period of notice to the conference. A conference agreement shall not require or permit a conference member to give more than 5 calendar days' notice to the conference, except that in the case of a new or increased rate the notice period shall conform to the tariff publication requirements of this chapter.

* * * * *

(d) A conference agreement shall not require a member who proposes independent action to attend a conference meeting, to submit any further information other than that necessary to accomplish the publication of the independent tariff item, or to comply with any other procedure for the purpose of explaining, justifying, or compromising the proposed independent action.

(e) A conference agreement shall specify that any new rate or service item proposed by a member under independent action (except for exempt commodities not published in the conference tariff) shall be included by the conference in its tariff for use by that member effective no later than 5 calendar days after receipt of the notice and by any other member that notifies the conference that it elects to adopt the independent rate or service item on or after its effective date.

(f)(1) * * * Additionally, if a party to an agreement chooses to take on an IA of another party, but alters it, such action is considered a new IA and must be published pursuant to the IA publication and notice provisions of the applicable agreement.

(2) An IA TVR published by a member of a ratemaking agreement may be adopted by another member of the agreement, provided that the adopting member takes on the original IA TVR in its entirety without change to any aspect of the original rate offering (except beginning and ending dates in the time period) (i.e., a separate TVR with a separate volume of cargo but for the same duration). Any subsequent IA TVR offering which results in a change in any aspect of the original IA TVR, other than the name of the offering carrier or the beginning date of the adopting IA TVR, is a new independent action and shall be processed in accordance with the provisions of the applicable agreement. The adoption procedures

discussed above do not authorize the participation by an adopting carrier in the cargo volume of the originating carrier's IA TVR. Member lines may publish and participate in joint IA TVRs, if permitted to do so under the terms of their agreement; however, no carrier may participate in an IA TVR already published by another carrier.

* * * * *

23. Revise redesignated § 535.802 to read as follows:

§ 535.802 Service contracts.

(a) Ocean common carrier agreements may not prohibit or restrict a member or members of the agreement from engaging in negotiations for service contracts with one or more shippers.

(b) Ocean common carrier agreements may not require a member or members of the agreement to disclose a negotiation on a service contract, or the terms and conditions of a service contract, other than those terms or conditions required by section 8(c)(3) of the Shipping Act.

(c) Ocean common carrier agreements may not adopt mandatory rules or requirements affecting the right of an agreement member or agreement members to negotiate or enter into service contracts.

(d) An agreement may provide authority to adopt voluntary guidelines relating to the terms and procedures of an agreement member's or agreement members' service contracts if the guidelines explicitly state the right of the members of the agreement not to follow these guidelines.

(e) Voluntary guidelines shall be submitted to the Director, Bureau of Economics and Agreement Analysis, Federal Maritime Commission, Washington, DC 20573. Voluntary guidelines shall be kept confidential in accordance with § 535.608 of this part. Use of voluntary guidelines prior to their submission is prohibited.

24. Amend Subpart H—Mandatory and Prohibited Provisions to add new § 535.803 to read as follows:

§ 535.803 Ocean freight forwarder compensation.

No conference or group of two or more ocean common carriers may:

(a) Deny to any member of such conference or group the right, upon notice of not more than 5 calendar days, to take independent action on any level of compensation paid to an ocean freight forwarder; or

(b) Agree to limit the payment of compensation to an ocean freight forwarder to less than 1.25 percent of the aggregate of all rates and charges applicable under the tariff assessed against the cargo on which the forwarding services are provided.

By the Commission.[3]

Bryant L. VanBrakle,

Secretary.

[FR Doc. 99–5364 Filed 3–5–99; 8:45 am]

BILLING CODE 6730–01–P

[3] Although Commissioner Won voted to issue the Final Rule, he indicated a strong preference for the ''voluntary guidelines'' provisions set forth in the proposed rule.

federal register

Monday
March 8, 1999

Part VII

Department of Housing and Urban Development

Rural Housing and Economic Development Program, Funding Availability for Fiscal Year 1999; Notice

DEPARTMENT OF HOUSING AND URBAN DEVELOPMENT

[Docket No. FR–4483–N–01]

Notice of Funding Availability for the HUD Rural Housing and Economic Development Program for Fiscal Year 1999

AGENCY: Office of the Assistant Secretary for Community Planning and Development, HUD.

ACTION: Notice of funding availability (NOFA).

SUMMARY: *Purpose of Program:* The purpose of the Rural Housing and Economic Development program is to build capacity at the State and local level for rural housing and economic development and to support innovative housing and economic development activities in rural areas. The funds made available under this program will be awarded competitively, through a selection process conducted by HUD in consultation with the United States Department of Agriculture (USDA).

Available Funds: Approximately $27 million in Fiscal Year (FY) 1998 and 1999 funding.

Eligible Applicants: Local rural non-profit organizations, community development corporations, Indian tribes, State housing finance agencies, and State economic development or community development agencies.

Application Deadline: April 30, 1999.

Match: None.

SUPPLEMENTARY INFORMATION: If you are interested in applying for funding under this program, please review carefully the following information:

I. Application Due Date and Technical Assistance

Application Due Date: Completed applications (one original and two copies) must be submitted on or before 12:00 midnight, Eastern time, on April 30, 1999 to the address shown below.

Address for Submitting Applications: Completed applications (one original and two copies) must be submitted to: Processing and Control Unit, Room 7255, Office of Community Planning and Development, Department of Housing and Urban Development, 451 Seventh Street, SW, Washington, DC 20410; ATTN: Rural Housing and Economic Development program. When submitting your application, please include your name, mailing address (including zip code) and telephone number (including area code).

(1) *Mailed Applications.* Your applications will be considered timely filed if postmarked on or before 12:00 midnight (Eastern time) on the application due date and received at the address above on or within five (5) calendar days of the application due date.

(2) *Applications Sent by Overnight/Express Mail Delivery.* Applications sent by overnight delivery or express mail will be considered timely filed if received before or on the application due date, or upon submission of documentary evidence that they were placed in transit with the overnight delivery service by no later than the specified application due date.

(3) *Hand Carried Applications.* Hand carried applications delivered before and on the application due date must be brought to the specified location at HUD Headquarters and room number between the hours of 8:45 am to 5:15 pm, Eastern time. Applications hand carried on the application due date will be accepted in the South Lobby of the HUD Headquarters Building at the above address from 5:15 pm until 12:00 midnight, Eastern time. This deadline date is firm. Please make appropriate arrangements to arrive at the HUD Headquarters Building before 12:00 midnight on the application due date.

For Further Information and Technical Assistance. All information and materials required to submit an application for funding under the HUD Rural Housing and Economic Development program are included in the Appendix to this NOFA.

For information concerning the HUD Rural Housing and Economic Development program, contact Michael T. Savage, Office of Community Planning and Development, Department of Housing and Urban Development, 451 7th Street, SW, Room 7136, Washington, DC 20410; telephone (202) 708–2290 (this is not a toll-free number). Persons with speech or hearing impairments may access this number via TTY by calling the toll-free Federal Information Relay Service at 1–800–877–8339.

Prior to the application deadline, HUD at the numbers above will be available to provide general guidance, but not guidance in actually preparing the application. Following selection, but prior to award, HUD staff will be available to assist in clarifying or confirming information that is a prerequisite to the offer of an award by HUD.

II. Amount Allocated

(A) Available Funds

Approximately $27 million in Fiscal Year (FY) 1998 and 1999 funding is being made available through this NOFA for the Rural Housing and Economic Development program. The breakdown for this funding is discussed below.

(B) The FY 1999 HUD Appropriations Act

The Departments of Veterans Affairs and Housing and Urban Development, and Independent Agencies Appropriations Act, 1999 (Pub. L. 105–276, approved October 21, 1998; 112 Stat. 2461, 2475) (the ''FY 1999 HUD Appropriations Act'') made $24 million in FY 1999 funds available for competitive funding under the Rural Housing and Economic Development program. The FY 1999 HUD Appropriations Act also specifies that certain unobligated funds authorized by the FY 1998 HUD Appropriations Act (Pub.L. 105–65, approved October 27, 1997; 111 Stat. 1344, 1357) shall be also made available under the Rural Housing and Economic Development program. The amount of unobligated funds from this source is $3 million. Therefore, the total amount of funding made available under this NOFA is $27 million.

(C) Funding Categories/Expected Average Award Amounts

HUD will award up to $27 million ($24 million in FY 1999 funds and $3 million in unobligated FY 1998 funds, as discussed above) on a competitive basis in the following three funding categories. HUD reserves the right to modify the size of a grant award to meet the objectives of the Rural Housing and Economic Development program.

(1) Capacity Building

HUD will award up to $4 million ($3 million in FY 1999 funds and $1 million in FY 1998 funds) to build capacity at the State, tribal, and local level for rural housing and economic development. This amount will go directly to local rural nonprofits, community development corporations (CDCs) and Indian tribes to support capacity building and technical assistance. HUD expects the average award amount under this funding category to be $150,000.

(2) Support for Innovative Activities

HUD will award up to $17 million ($16 million in FY 1999 funds and $1 million in FY 1998 funds) to Indian tribes, State Housing Finance Agencies (HFA)s, state community and/or economic development agencies, local rural non-profits and CDCs to support innovative housing and economic development activities in rural areas. HUD expects the average award amount under this funding category to be $500,000.

(3) Seed Support

HUD will award up to $6 million ($5 million in FY 1999 funds and $1 million in FY 1998 funds) in seed support for Indian tribes, local rural non-profits and CDCs that are located in areas that have limited capacity for the development of rural housing and economic development activities. HUD expects the average award amount under this funding category to be $200,000.

(D) Innovative Strategies Clearinghouse

In addition to the three funding categories described above, $1 million in FY 1999 Rural Housing and Economic Development program funds will be used to create a clearinghouse of ideas for innovative strategies for rural housing and economic development and revitalization.

III. Program Description; Eligible Applicants; Eligible Activities

(A) Program Description

(1) Background

There is a great need for expanding the supply of housing in rural America, particularly affordable housing for low income families and individuals. There are a number of rural areas which have experienced rapid in-migration as a result of a growth in employment opportunities, but which have a shortage of affordable housing. In addition, because of out-migration from rural areas, and other factors causing economic dislocation, many rural areas suffer from severe economic distress. There has been a growing national recognition of the need to enhance the capacity of local and State governments, Indian tribes, local rural nonprofits, and CDCs to expand the supply of affordable housing and to engage in economic development activities in rural areas.

A number of resources are available from the Federal government to address these problems, including programs of the United States Department of Agriculture (USDA), the Economic Development Administration (EDA), the Appalachian Regional Commission (ARC), the Department of Interior (for Indian Tribes) and HUD. The Rural Housing and Economic Development program has been developed to supplement these resources and to focus specifically on capacity building and innovative approaches to both housing and economic development in rural areas. In administering these funds, HUD will encourage coordination between all Federal agencies in support of the program objectives.

(2) Definitions

Areas that have limited capacity for the development of rural housing and economic development means areas in which very few or no institutions or organizations exist which have the capacity to develop housing or economic development activities of the sort proposed in the application.

Colonia means any identifiable community that:

(i) Is located in the State of Arizona, California, New Mexico, or Texas;

(ii) Is located in the U.S.-Mexico border region (that is, within 150 miles of the border between the U.S. and Mexico); and

(iii) Meets objective criteria, including lack of potable water supply, lack of adequate sewage systems, and lack of decent, safe, sanitary, and accessible housing.

Although section 916(e)(4) of the Cranston-Gonzalez National Affordable Housing Act (42 U.S.C. 5306(e)(4)) included the notation that a colonia must have been in existence and generally recognized as such prior to its enactment, HUD recognizes that additional identifiable colonias have come into existence, in the near-decade since the enactment, and are in need of assistance to the same extent as older colonias.

Farmworker means a farm employee of an owner, tenant, labor contractor, or other operator raising or harvesting agricultural or aquacultural commodities; or a worker in the employ of a farm operator, handling planting, drying, packing, grading, storing, delivering to storage or market, or carrying to market agricultural or aquacultural commodities produced by the operator. Seasonal farmworkers are those farm employees who typically do not have a constant year round salary. Migrant farmworkers are those farm employees whose work requires travel that prevents the employee from returning to his or her permanent place of residence within the same day.

Firm commitment means the agreement by which an applicant's partner agrees to perform an activity specified in the application and demonstrates the financial capacity to deliver the resources necessary to carry out the activity, and commits the resources to the activity. Although a firm commitment need not be legally binding, or enforceable, at the time the grant is awarded, it must be legally binding before grant funds may be expended. In documenting a firm commitment, the applicant's partner must:

(i) Specify the authority by which the commitment is made, the amount of the commitment and the use of funds. If the committed activity is to be self-financed, the applicant's partner must evidence its financial capability through a corporate or personal financial statement or other appropriate means. If any portion of it is to be financed through a lending institution, the participant must evidence the institution's commitment to fund the loan;

(ii) State the amount and use of the grant, and the relationship of the grant to the proposed investment; and

(iii) Affirm that its investment is contingent upon receipt of the total grant or other public money (or a specified portion thereof), and state a willingness on the part of the signatory to sign a legally binding commitment upon award of the grant.

Indian tribe means any entity eligible to apply for funding under the Indian Community Development Block Grant (ICDBG) program (see 24 CFR 1003.5(a)).

Innovative housing and economic development activities means tools, techniques, methods, combinations of assistance, construction methods materials, and financing institutions or sources new to the area, region or population served. The innovative activities can also build upon and enhance a model that already exists.

Local rural non-profit or community development corporation means either:

(i) Any private entity with tax exempt status recognized by the Internal Revenue Service (IRS) which serves the rural area involved in the application (including local affiliates of national organizations that provide technical and capacity building assistance in rural areas); or

(ii) Any public non-profit such as a Council of Governments that serves the rural area.

Rural area may be defined in one of five ways:

(i) A place having fewer than 2,500 inhabitants (within or outside of metropolitan areas).

(ii) A county with no urban population (i.e., city) of 20,000 inhabitants or more.

(iii) Territory, persons, and housing units in the rural portions of ''extended cities.'' The U.S. Census Bureau identifies the rural portions of extended cities in the United States.

(iv) Open country which is not part of or associated with an urban area. The United States Department of Agriculture (USDA) determines what constitutes ''open country.''

(v) Any place with a population not in excess of 20,000 which is not located in a Metropolitan Statistical Area.

State economic development or community development agency means any state agency which has promotion of statewide or local community/economic development as its primary purpose.

State Housing Finance Agency means any state agency created to assist local communities and housing providers with financing assistance for development of housing, particularly for low and moderate income people.

(3) Eligible Applicants

Eligible applicants for each of the funding categories are as follows:

(a) *For capacity building funding.* If you are a local rural non-profit, CDC, or Indian tribe, you are eligible for capacity building assistance. If you are a local rural nonprofit/CDC applying for capacity building funds (and are not a local affiliate of a national organization), you must either:

(i) Have experience in providing technical assistance and capacity building assistance in rural areas; or

(ii) Partner with another organization that has such experience.

(b) *For support for innovative activities funding.* If you are a local rural non-profit, CDC, Indian tribe, State HFA, or State economic development or community development agency, you may apply for funding to support innovative housing or economic development activities in rural areas.

(c) *For seed support funding.* If you are a local rural non-profit, CDC, or Indian tribe, you may apply for seed support funding.

(4) Eligible Activities

The following are examples of eligible activities under the Rural Housing and Economic Development program. The examples are illustrative and are not meant to limit the activities that you may propose in your application. Any activity that meets the objective of the Rural Housing and Economic Development program will be considered eligible.

(a) *For capacity building funding.* Capacity building for rural housing and economic development involves the enhancement of existing organizations to carry out new functions and/or perform more effectively existing functions; and the creation of new organizations or institutions to carry out specific functions.

(i) Activities in connection with strengthening existing organizations include hiring qualified staff, supporting and training existing staff, providing software and other tools to provide networking and research capability, and obtaining expertise from outside sources. They also include hiring staff and training to improve management capability, including development of accounting systems, MIS support and related activities. Eligible activities also include arranging for technical assistance to conduct need assessments, conduct asset inventories, develop strategic plans, assist businesses to prepare pro formas, conduct market research. These activities also include the promotion of fair housing by training local organizations and residents in fair housing issues, and by helping them to file fair housing complaints with HUD, when warranted.

(ii) With regard to new organizations, the Rural Housing and Economic Development program is intended to create new funding sources and financing mechanisms and improve access to existing resources. Eligible activities include technical assistance for and the costs of establishing (but not capitalizing) private community development financial institutions (CDFIs) using Federal funds, lines of credit, revolving loan funds, microenterprises, small business incubators etc. The legal costs of establishing an organization or creating a subsidiary of an existing one are also eligible.

(b) *For support of innovative rural housing and economic development funding.* (i) This category is intended to support, but not be limited to, ''hard costs'' for both housing and economic development. Eligible activities include preparation of plans, architectural and engineering drawings and reports, financial assistance for acquisition of land and buildings, demolition, purchase of materials, construction costs, the use of local labor markets, and provision of infrastructure.

(ii) With regards to housing, eligible activities include homeownership counseling, application of innovative construction methods, encouraging building design which reflects terrain, weather, and availability of indigenous materials. The latter would include construction training, remedial education and social service support. Building design is subject to the requirements of the Americans with Disabilities Act and section 504 of the Rehabilitation Act of 1973.

(iii) For both housing and economic development, eligible activities include establishing CDFIs, lines of credit, revolving loan funds, microenterprises, small business incubators, provision of direct financial assistance to homeowners/businesses/developers, etc. This can be in the form of establishing default reserves, pooling/securitization mechanisms, loans, grants, etc.

(c) *For seed support funding.* This category is intended to provide funds for start up costs, either for new organizations/institutions, or for specific projects that will support innovative housing and economic development activities. For organizations, this could include ''up front'' money for acquiring space and support facilities, as well as hiring staff and other appropriate activities discussed under capacity building. For both housing and economic development projects, eligible activities include purchase of land, options, purchase of inventory and other business ''start up'' costs as well as all other types of administrative expenses cited in 24 CFR 570.206(g) of the Community Development Block Grant entitlement regulations.

IV. Program Requirements

(A) Statutory Requirements

To be eligible for funding under this NOFA, you, the applicant, must meet all applicable statutory and regulatory requirements. If you need copies of the HUD regulations referenced in this NOFA, they are available at the HUD web site located at http://www.HUD.gov. HUD may reject an application from further funding consideration if the activities or projects proposed in the application are not eligible activities and projects, or HUD may eliminate the ineligible activities from funding consideration and reduce the grant amount accordingly.

(B) Threshold Requirements—Compliance With Fair Housing and Civil Rights Laws.

With the exception of Federally recognized Indian tribes, all applicants and their subrecipients must comply with all Fair Housing and civil rights laws, statutes, regulations and executive orders as enumerated in 24 CFR 5.105(a). If you are a Federally recognized Indian tribe, you must comply with the Age Discrimination Act of 1975, section 504 of the Rehabilitation Act of 1973, and the Indian Civil Rights Act.

If you, the applicant, or any of your partners or affiliates—

(1) Have been charged with a systemic violation of the Fair Housing Act by the Secretary alleging ongoing discrimination;

(2) Are a defendant in a Fair Housing Act lawsuit filed by the Department of Justice alleging an ongoing pattern or practice of discrimination; or

(3) Have received a letter of noncompliance findings under Title VI,

Section 504 of the Rehabilitation Act of 1973, or Section 109 of the Housing and Community Development Act of 1974—

HUD will not rank and rate your application under this NOFA if the charge, lawsuit, or letter of findings has not been resolved to the satisfaction of the Department before the application deadline stated in this NOFA. HUD's decision regarding whether a charge, lawsuit, or a letter of findings has been satisfactorily resolved will be based upon whether appropriate actions have been taken to address allegations of ongoing discrimination in the policies or practices involved in the charge, lawsuit, or letter of findings.

(C) Additional Nondiscrimination Requirements

You, the applicant, must comply with the Americans with Disabilities Act, and Title IX of the Education Amendments Act of 1972.

(D) Affirmatively Furthering Fair Housing

With the exception of Indian tribes, if you are a successful applicant, you will have a duty to affirmatively further fair housing. You, the applicant, should include in your work plan the specific steps that you will take to promote and ensure fair housing rights and fair housing choice.

(E) Economic Opportunities for Low and Very Low-Income Persons (Section 3)

You must comply with section 3 of the Housing and Urban Development Act of 1968, 12 U.S.C. 1701u (Economic Opportunities for Low and Very Low-Income Persons) and the HUD regulations at 24 CFR part 135, including the reporting requirements in subpart E, if:

(1) The amount of your grant exceeds $200,000; and

(2) Your funded project involves the construction, reconstruction, conversion or rehabilitation of housing (including the reduction and abatement of lead-based paint hazards), or other public construction which involves buildings and improvements (regardless of ownership).

Section 3 requires recipients to ensure that, to the greatest extent feasible, training, employment and other economic opportunities will be directed to low and very low income persons, particularly those who are recipients of government assistance for housing; and business concerns which provide economic opportunities to low and very low income persons.

(F) Relocation

Any person (including individuals, partnerships, farms, corporations or associations) who moves from real property or moves personal property from real property directly (1) because of a written notice to acquire real property in whole or in part, or (2) because of the acquisition of the real property, in whole or in part, for a HUD-assisted activity is covered by the Federal relocation statute and regulations. Specifically, this type of move is covered by the acquisition policies and procedures and the relocation requirements of the Uniform Relocation Assistance and Real Property Acquisition Policies Act of 1970, as amended (URA), and the implementing governmentwide regulation at 49 CFR part 24. The relocation requirements of the URA and the governmentwide regulations also cover any person who moves permanently from real property or moves personal property from real property directly because of rehabilitation or demolition for an activity undertaken with HUD assistance.

(G) Forms, Certifications and Assurances

You, the applicant, are required to submit signed copies of the standard forms, certifications, and assurances included in the Appendix to this NOFA.

(H) OMB Circulars

The policies, guidance, and requirements of OMB Circular No. A–87 (Cost Principles Applicable to Grants, Contracts and Other Agreements with State and Local Governments), OMB Circular No. A–122 (Cost Principles for Nonprofit Organizations), OMB Circular No. A–133 (Audits of States, Local Governments, and Non-Profit Organizations), 24 CFR part 84 (Grants and Agreements with Institutions of Higher Education, Hospitals, and other Non-Profit Organizations) and 24 CFR part 85 (Administrative Requirements for Grants and Cooperative Agreements to State, Local, and Federally recognized Indian tribal governments) apply to the award, acceptance and use of assistance under the Rural Housing and Economic Development program NOFA, and to the remedies for noncompliance, except when inconsistent with the provisions of the FY 1999 HUD Appropriations Act, other Federal statutes or the provisions of this NOFA. Copies of the OMB Circulars may be obtained from EOP Publications, Room 2200, New Executive Office Building, Washington, DC 10503, telephone (202) 395–7332 (this is not a toll free number).

(I) Environmental Review

Selection for award does not constitute approval of any proposed sites. Following selection for award, HUD will perform an environmental review of activities proposed for assistance under this part, in accordance with 24 CFR part 50. The results of the environmental review may require that proposed activities be modified or that proposed sites be rejected. Applicants are particularly cautioned not to undertake or commit funds for acquisition or development of proposed properties prior to HUD approval of specific properties or areas. Each application shall contain an assurance that you, the applicant, will assist HUD to comply with part 50; will supply HUD with all available, relevant information to perform an environmental review for each proposed property; will carry out mitigating measures required by HUD or select alternate property; and will not acquire, rehabilitate, convert, lease, repair or construct property, not commit HUD or local funds for these program activities with respect to any eligible property, until HUD approval of the property is received. In supplying HUD with environmental information, grantees are to use the same guidance as provided in the HUD Handbook entitled ''Field Environmental Review Processing for HUD Colonias Initiative (HCI) grants'' issued January 27, 1998.

(J) Grant Amounts

In the event you, the applicant, are awarded a grant that has been reduced (e.g. the application contained some activities that were ineligible or budget information did not support the request), you will be required to modify your project plans and application to conform to the terms of HUD's approval before execution of a grant agreement. HUD reserves the right to reduce or de-obligate the award if approvable modifications to the proposed project are not submitted by the awardee in the required amounts in a timely manner. Any modifications must be within the scope of the original application. HUD reserves the right not to make awards under this NOFA.

(K) Grant Period

Recipients will have 36 months from the date of funding award to complete all project activities except the final evaluation and reporting, fulfillment and audit requirements and final project close-out.

(L) Negotiations

After all applications have been rated and ranked and a selection has been

made, HUD may require that grantees participate in negotiations to determine the specific tasks and grant budget. Where a specific area or one or more specific sites for project activities are identified in an application or during negotiations, HUD may undertake and complete its environmental review during negotiations. In cases where HUD cannot successfully conclude negotiations or a selected applicant fails to provide HUD with requested information, or if the reduced amount of funding makes the project infeasible, awards will not be made. In such instances, HUD will offer an award to the next highest ranking applicant and proceed with negotiations with that next highest ranking applicant.

(M) Adjustments to Funding

(1) HUD reserves the right to fund less than the full amount requested in your application to ensure the purpose of the program is met. HUD may not fund portions of the applications that are ineligible for funding under applicable program statutory or regulatory requirements, or which do not meet the requirements of this NOFA, but may fund eligible portions of the applications.

(2) If funds remain after funding the highest ranking applications in each funding category, HUD may fund part of the next highest ranking application in the same category (i.e., capacity-building). If the applicant turns down the award offer, or if the project is not feasible at the proposed funding level, HUD will make the same determination for the next highest ranking applications in each category.

(N) All property assisted under the Rural Housing and Economic Development program is covered by the Lead-Based paint Poisoning Prevention Act (42 U.S.C. 4821–4846) and HUD's implementing regulations at 24 CFR part 35.

V. Application Selection Process

(A) Rating and Ranking

(1) General

To review and rate applications, HUD may establish panels including outside experts or consultants to obtain certain expertise and outside points of view, including views from other Federal agencies. A total of 100 points is possible.

(2) Rating

All applicants for funding will be evaluated against the criteria below.

(3) Ranking

Applicants will be ranked separately within each of the three funding categories. Applicants will be selected for funding in accordance with their rank order in each category. If two or more applications are rated fundable and have the same score, but there are insufficient funds to fund all of them, the application(s) with the highest score for Rating Factor 3 (Soundness of Approach) shall be selected.

(B) Initial Screening

During the period immediately following the application deadline, HUD will screen each application to determine eligibility. Applications will be rejected if they:

(1) Are submitted by ineligible applicants (including applicants that do not meet the fair housing and civil rights threshold requirement described in section IV(B) of this NOFA);

(2) Do not serve an eligible rural area; or

(3) Propose a program for which significant activities are ineligible.

HUD will notify you if your application failed to pass the initial screening review.

(C) Rating Factors for Award

Rating Factor 1—Capacity of the Applicant and Relevant Organizational Experience (up to 25 points).

This rating factor addresses the qualifications and experience of the applicant and participating parties to carry out the objectives of the proposed activities within a reasonable time period. HUD will review and evaluate the information provided documenting capacity.

(a) *Rating standard applicable to all funding categories.* For all three funding categories, you must submit evidence of the experience of you and your partners (if any) in leveraging other Federal, local, State and private sector funds.

(b) *Rating standards applicable to individual funding categories.* The three funding categories have different objectives. Accordingly, in addition to the generally applicable rating standard discussed above, different standards will be used to judge the experience and qualifications of the applicants and any partners for each of the three funding categories.

(i) *Capacity Building.* (*1*) If you, the applicant, are an existing organization, HUD will consider the experience of you and your partners (if any) in housing or economic development programs and the competencies of your core staff to effectively utilize the funds which are being proposed for capacity building. You must demonstrate experience, including number of units built or economic development activities accomplished. You must describe your basic organization, management structure, and include evidence of internal and external coordination and an adequate accounting system.

(*2*) If you, the applicant, are a new institution or fund, HUD will consider the experience of a parent or sponsoring organization and its partners (if any) in areas related to the institution or funds and the organizational framework within which they will be established. You must describe the competencies of your core staff to manage the new institution or programs. If your parent or sponsoring organization has a governing board, HUD will consider the experience and relevant background of the board members.

(ii) *Support for Innovative Rural Housing and Economic Development Activities.* HUD will consider the demonstrated experience of you and your partners (if any) in carrying out the type of housing or economic development project or activity for which funding is being sought and the competencies of your staff who will be responsible for carrying it out. Since these funds are for implementation, not capacity building, you must describe the experience, including past achievements, that you and your partners (if any) have in conducting the specific type of activities for which funding is requested. You must also describe the competencies of your core staff to carry out the proposed activities for which you are requesting funding. You must also submit evidence of the experience of you and your partners (if any) in leveraging other Federal, local, State and private sector funds.

(iii) *Seed support.* HUD will consider the demonstrated experience of you and your partners (if any) in carrying out the specific type of program for which the seed support is being requested. You must describe the experience that you and your partners (if any) have in conducting the types of activities for which you are seeking funding, including the competencies of core staff. You must also submit evidence of the experience of you and your partners (if any) in leveraging other Federal, local, State and private sector funds.

Rating Factor 2—Need and Extent of the Problem (up to 25 points).

The Rural Housing and Economic Development program has been designed to address the problems of rural poverty, inadequate housing and lack of economic opportunity. Need will be addressed in two ways—‘‘

documentation of the demographics of economic distress (including the special factors discussed below); and demonstrated need for the specific activity or project.

(a) *Demographics of Economic Distress* (up to 10 points). You must provide data documenting economic distress. These data may include poverty rates, unemployment data, out-migration information and other statistics including health problem, crime rates, drug use, wage levels, high school dropout rates, literacy rates, incidence of homelessness, and rates/number of people on public assistance. Because of distances between population centers and low population densities in rural areas, considerable latitude will be allowed in establishing the most appropriate area to which the data apply. If housing shortages in an area are being caused by rapid in-migration, provide information regarding number of new residents and their housing needs. In addition to the data for the area itself, comparative statistics must be provided for the region or State which will document the high level of distress in the area to be served.

(b) *Demographics of Economic Distress—Special Factors (5 points).* Because of the concern of the Department with meeting the needs of certain underserved areas, you will be awarded a total of five points if you are located in or propose to serve the following:

(i) Areas with very small populations in non-urban areas (2,500 population or less);

(ii) Migrant and seasonal farmworkers;

(iii) Indian Tribes; or

(iv) Colonias

(c) *Demonstrated Need* (up to 10 points).

(i) *For capacity building.* You must document the need for improvement of existing organizations, creation of new institutions, etc. If a new institution or organization is being proposed, you must provide evidence documenting that no existing organization serves the identified need(s) in the area(s) to be served.

(ii) *For support for Innovative Rural Housing and Economic Development Activities.* (*1*) *General.* HUD will evaluate the importance of the project to the community and the projected outcomes. For both housing and economic development projects, you must describe the importance of the activities to be funded by the grant to the total project. HUD will also consider the degree to which the need for the project or activity has been reflected in the planning processes of the community.

(*2*) *For economic development proposals,* you must describe the number of jobs to be created, provisions for job training and linkage to jobs for area residents and the potential for attracting or creating new industry niches, and the extent to which it will build wealth in the community.

(*3*) *For housing projects,* HUD will evaluate the extent to which the proposed housing satisfies an unmet need. You must provide data which documents the need for increasing the supply of affordable housing in the areas in which housing is to be provided. You must address the issues of the affordability of housing and the cost of housing, as well as the availability of financing. You must use census tracts, political boundaries, neighborhood designations or other delineations to define the area to be served. You must state the source of the information provided. You must provide information on:

(*A*) Vacancy rates;

(*B*) Substandard housing;

(*C*) Shortage of affordable housing (if the shortage of housing has been caused by recent in-migration, provide statistics regarding the number of new residents and describe the problem which this has caused); and

(*D*) Rent burden.

(iii) *For Seed Support.* HUD will evaluate the relative importance of the seed support which is being sought to the viability of the project or activity. You must describe the importance of the seed money to be provided to the total project.

Rating Factor 3—Soundness of Approach (up to 30 points).

This factor addresses the quality and anticipated effectiveness of your Statement of Work in meeting the needs you have identified in rating factor 2. HUD will be evaluating your Statement of Work for its proposed activities, reasonableness of costs, and management plan for assuring timely completion of all work. HUD is interested in quickly creating housing and economic development opportunities in rural areas. HUD will consider:

(a) The extent to which your Statement of Work meets the purposes of this NOFA, is logical, feasible, and provides a schedule for the completion of major tasks and deliverables. If your proposed activities will quickly produce demonstrable results and advance the purposes of the Rural Housing and Economic Development program, you will receive a higher score.

(b) The rationale for your proposed activities and methods and why you believe these activities will be most effective in addressing the identified need. If you are proposing new methods for which there is limited knowledge of the effectiveness, you must provide the basis for modifying past practices, and your rationale for why the modified approach will yield more effective results.

(c) The extent to which your management plan identifies the specific actions that you and others responsible for implementing the project will take to complete your proposed activities on time and within budget.

(d) The quality, thoroughness, and reasonableness of the cost estimates provided, including costs broken down by line item for each proposed activity.

Rating Factor 4—Leveraging Resources (up to 10 points).

(a) *Leveraging of Other Funding Commitments (All Funding Categories) (up to 5 points).* HUD will evaluate the extent to which applicants for any of the three funding categories have obtained firm commitments of resources from other Federal, State, local, and private sources. In assigning points for this criterion, HUD will consider the level of outside resources obtained for cash or in kind services that support activities proposed in your application. This criterion is applicable to all three funding categories under this NOFA. The level of outside resources for which commitments are obtained will be evaluated based on their importance to the total program.

(b) *Financial Leverage Projects (Innovative Grants Only) (up to 5 points).* Because HUD fully supports the expansion of lending opportunities to disadvantaged areas of rural America, HUD will award up to 5 points to those applicants which propose—either individually or through coalitions of organizations—to carry out diversified financial leveraging linkages that are designed to mitigate the risk of lending by securing a pool of much larger funds from other funding sources, e.g., private institutions and foundations. In awarding these points, HUD will consider the level of existing leveraging relations with private institutions, foundations, and other entities; and the proposed use of the leveraging funds, e.g., to establish a loan loss reserve; provide gap financing, homeownership assistance, or business loans for firms; to serve as a financial intermediary, etc. This criterion is applicable only to funding for support of innovative rural housing and economic development activities.

Rating Factor 5—Comprehensiveness and Coordination (10 points).

This factor addresses the extent to which your proposed program is coordinated with other ongoing and related activities in the area you propose to serve. The purpose of this factor is to ensure that whenever possible, activities are not operated in isolation, but rather are linked with related activities and organizations to improve the overall effectiveness of all efforts being undertaken as part of your overall effort. In evaluating this factor, HUD will consider the extent to which you have coordinated your activities with other known organizations, participate or promote participation in the state's Consolidated Planning process, and have addressed your described need in a holistic and comprehensive manner through linkages with other activities in the area or approved plans and programs funded by state or local governments.

In evaluating this factor, HUD will consider the extent to which you demonstrate that you have:

(a) Coordinated your proposed plan of activities with those of other groups or organizations in order to best complement and mutually support others' ongoing efforts or programs;

(b) Identified specific actions that have been taken or will be taken to coordinate comprehensive solutions through meetings, information networks, planning processes and other mechanisms with:

(i) Other HUD funded projects/activities; and

(ii) Other Federal, State or locally funded activities, including those proposed or ongoing in the area.

VI. Application Submission Requirements

You must submit a separate application for each funding category you are applying for under this NOFA. The portion of your application consisting of your Statement of Work (see below) must be no more than 25 pages, and must be submitted on 8.5″ by 11″ paper, with lines double spaced and printed only one side. All pages of the application shall be numbered sequentially. Your application must include the following:

(A) Statement of Work

You must submit a Statement of Work which addresses the rating factors discussed in Section V(C) of this NOFA. The Statement of Work must start with a summary of the proposed program, including your objective, partners (if any), activities, and costs. All of the issues covered in the respective rating factors must be covered in order to receive full credit in the evaluation of the proposal. Following the summary, the Statement of Work must be organized as follows:

(1) You must describe your organization and the assignment of responsibilities for the work to be carried out under the grant (Rating Factor 1).

(2) You must describe the need and extent of the problem (Rating Factor 2).

(a) If you propose to create a new organization or institution under the capacity building funding category, you must provide evidence documenting that no existing organization or institution exists which serves the need identified in the area.

(b) If you are applying for seed support funding, you must provide evidence documenting that the area has limited capacity for the development of rural housing and economic development.

(3) You must describe the objective of your proposed program (Rating Factor 3). In addressing this submission requirement, you must:

(a) Describe the activities you propose to undertake to address the needs which have been identified, and describe the specific outcomes you expect to achieve.

(b) Include a budget in the format provided which explains the uses of both Federal and non-Federal funds and the period of performance under the grant.

(c) Include a discussion of the process by which the work accomplished with the grant will be evaluated to determine if the objectives of the grant were met. Be specific regarding the qualifications of the evaluator and the process to be used.

(4) You must identify the resources which will be leveraged and explain their importance to the program (Rating Factor 4). To receive the maximum number of points under Rating Factor 4(a), you must provide evidence of firm commitments. The commitment can be contingent upon HUD site approval following environmental review.

(5) You must describe the extent to which your program reflects a coordinated, community based process of identifying needs and building a system to address these needs (Rating Factor 5).

(B) In addition to the Statement of Work, your application must also include an original and two copies of the items listed below:

(1) A transmittal letter;

(2) A table of contents;

(3) A signed SF–424 (application form);

(4) A budget for all funds (Federal and Non-Federal) and a breakdown of all Federal funds requested, in the format provided in the Appendix to this NOFA;

(5) Documentation of funds pledged in support of Rating Factor 4—''Leveraging Resources'';

(6) The required certifications (signed, as appropriate, and attached as an Appendix);

(7) Acknowledgment of Application Receipt form (submitted with application and returned to you as verification of timely receipt).

(8) If you are a private nonprofit organization, a copy of your organization's IRS ruling providing tax-exempt status under section 501 of the IRS Code of 1986, as amended.

(9) Documentation demonstrating that the area served meets one of the five definitions of the term ''rural area'' set forth in section III(A)(2) of this NOFA.

(10) The Environmental Review Assurance.

VII. Corrections to Deficient Applications

After the application due date, HUD may not, consistent with its regulations in 24 CFR part 4, subpart B, consider any unsolicited information you, the applicant, may want to provide. HUD may contact you, however, to clarify an item in your application or to correct technical deficiencies. You should note, however, that HUD may not seek clarification of items or responses that improve the substantive quality of your response to any eligibility or selection factors. *Examples* of curable (correctable) technical deficiencies include your failure to submit the proper certifications or your failure to submit an application that contains an original signature by an authorized official. In each case, HUD will notify you in writing by describing the clarification or technical deficiency. HUD will notify applicants by facsimile or by return receipt requested. Applicants must submit clarifications or corrections of technical deficiencies in accordance with the information provided by HUD within 5 calendar days of the date of receipt of the HUD notification. If your deficiency is not corrected within this time period, HUD will reject your application as incomplete, and it will not be considered for funding.

VIII. Findings and Certifications

Paperwork Reduction Act Statement

The information collection requirements related to this program have been approved by the Office of Management and Budget (OMB) in

accordance with the Paperwork Reduction Act of 1995 (44 U.S.C. 3501–3520). The OMB approval number, once approved, will be published in the **Federal Register**. An agency may not conduct or sponsor, and a person is not required to respond to, a collection of information unless the collection displays a valid control number.

Environmental Impact

A Finding of No Significant Impact with respect to the environment has been made in accordance with HUD regulations at 24 CFR part 50, implementing section 102(2)(C) of the national Environmental Policy Act of 1969 (42 U.S.C. 4332). The Finding of No Significant Impact is available for public inspection during business hours in the Office of the Rules Docket Clerk, Room 10276, Department of Housing and Urban Development, 451 Seventh Street, SW, Washington, DC 20410.

Federalism, Executive Order 12612

The General Counsel, as the Designated Official under section 6(a) of Executive Order 12612, *Federalism,* has determined that the policies contained in this NOFA will not have substantial direct effects on States or their political subdivisions, or on the relationship between the Federal Government and the States, or on the distribution of power and responsibilities among the various levels of government. Specifically, the NOFA solicits applicants to build capacity at the State and local level for rural housing and economic development and to support innovative housing and economic development activities in rural areas, and does not impinge upon the relationships between the Federal government and State and local governments. As a result, the NOFA is not subject to review under the Order.

Prohibition Against Lobbying Activities

You, the applicant, are subject to the provisions of section 319 of the Department of Interior and Related Agencies Appropriation Act for Fiscal Year 1991, 31 U.S.C. 1352 (the Byrd Amendment), which prohibits recipients of Federal contracts, grants, or loans from using appropriated funds for lobbying the executive or legislative branches of the Federal Government in connection with a specific contract, grant, or loan. You are required to certify, using the certification found at Appendix A to 24 CFR part 87, that you will not, and have not, used appropriated funds for any prohibited lobbying activities. In addition, you must disclose, using Standard Form LLL, ''Disclosure of Lobbying Activities,'' any funds, other than Federally appropriated funds, that will be or have been used to influence Federal employees, members of Congress, and congressional staff regarding specific grants or contracts. Tribes and tribally designated housing entities (TDHEs) established by an Indian tribe as a result of the exercise of the tribe's sovereign power are excluded from coverage of the Byrd Amendment, but tribes and TDHEs established under State law are not excluded from the statute's coverage.

Section 102 of the HUD Reform Act; Documentation and Public Access Requirements

Section 102 of the Department of Housing and Urban Development Reform Act of 1989 (42 U.S.C. 3545) (HUD Reform Act) and the regulations codified in 24 CFR part 4, subpart A, contain a number of provisions that are designed to ensure greater accountability and integrity in the provision of certain types of assistance administered by HUD. On January 14, 1992 (57 FR 1942), HUD published a notice that also provides information on the implementation of section 102. The documentation, public access, and disclosure requirements of section 102 apply to assistance awarded under this NOFA as follows:

(1) *Documentation and public access requirements.* HUD will ensure that documentation and other information regarding each application submitted pursuant to this NOFA are sufficient to indicate the basis upon which assistance was provided or denied. This material, including any letters of support, will be made available for public inspection for a 5-year period beginning not less than 30 days after the award of the assistance. Material will be made available in accordance with the Freedom of Information Act (5 U.S.C. 552) and HUD's implementing regulations in 24 CFR part 15.

(2) *Disclosures.* HUD will make available to the public for 5 years all applicant disclosure reports (HUD Form 2880) submitted in connection with this NOFA. Update reports (also Form 2880) will be made available along with the applicant disclosure reports, but in no case for a period less than 3 years. All reports—both applicant disclosures and updates—will be made available in accordance with the Freedom of Information Act (5 U.S.C. 552) and HUD's implementing regulations at 24 CFR part 5.

(3) *Publication of Recipients of HUD Funding.* HUD's regulations at 24 CFR 4.7 provide that HUD will publish a notice in the **Federal Register** on at least a quarterly basis to notify the public of all decisions made by the Department to provide:

(i) Assistance subject to section 102(a) of the HUD Reform Act; or

(ii) Assistance that is provided through grants or cooperative agreements on a discretionary (non-formula, non-demand) basis, but that is not provided on the basis of a competition.

Section 103 HUD Reform Act

HUD's regulations implementing section 103 of the Department of Housing and Urban Development Reform Act of 1989 (42 U.S.C. 3537a), codified in 24 CFR part 4, apply to this funding competition. The regulations continue to apply until the announcement of the selection of successful applicants. HUD employees involved in the review of applications and in the making of funding decisions are limited by the regulations from providing advance information to any person (other than an authorized employee of HUD) concerning funding decisions, or from otherwise giving any applicant an unfair competitive advantage. Persons who apply for assistance in this competition must confine their inquiries to the subject areas permitted under 24 CFR part 4.

Applicants or employees who have ethics related questions should contact the HUD Ethics Law Division at (202) 708–3815. (This is not a toll-free number.) For HUD employees who have specific program questions, the employee should contact the appropriate field office counsel, or Headquarters counsel for the program to which the question pertains.

IX. Authority

The Departments of Veterans Affairs and Housing and Urban Development, and Independent Agencies Appropriations Act, 1999 (Pub.L. 105–276, approved October 21, 1998; 112 Stat. 2461, 2475).

Dated: March 2, 1999.

Cardell Cooper,

Assistant Secretary for Community Planning and Development.

BILLING CODE 4210–29–P

Appendix

Checklist of Forms and Certifications

Page Number

- [ ] Transmittal Letter
- [ ] Checklist and Submission Table of Contents
- [ ] Standard Form for Application for Federal Assistance (SF-424)
- [ ] Statement of Work, including summary and responses to factors for award
- [ ] Budget in support of Rating Factor 3
- [ ] Documentation of Funds/In-Kind Services pledged in support of Rating Factor 4
- [ ] Required Certifications (signed)
  - [ ] Certification for a Drug-Free Workplace (HUD-50070)
  - [ ] Certification of Payments to Influence Federal Transactions (HUD-50071)(see 24 CFR part 87, Appendix A)
  - [ ] Disclosure of Lobbying Activities (SF-LLL) (If required, see 24 CFR part 87, Appendix B)
  - [ ] Applicant/Recipient Disclosure/Update Report (HUD-2880)
  - [ ] Applicant Nondiscrimination Certifications
  - [ ] Certification Regarding Debarment and Suspension (HUD-2992)
- [ ] Acknowledgment of Application Receipt (HUD-2993) (to be returned to applicant)
- [ ] For nonprofit organizations, a copy of the IRS ruling providing tax-exempt status under section 501 of the IRS Code of 1996, as amended

form HUD-40076-RH (02/24/99)

☐ Documentation that area served is rural area, as defined in this NOFA

☐ The Environmental Review Assurance

Application for Federal Assistance

OMB Approval No. 0348-0043

	2. Date Submitted	Applicant Identifier
1. **Type of Submission:** **Application** ☐ Construction ☐ Non-Construction; **Pre-application** ☐ Construction ☐ Non-Construction	3. Date Received by State	State Application Identifier
	4. Date Received by Federal Agency	Federal Identifier

5. **Applicant Information**

Legal Name	Organizational Unit
Address (give city, county, State, and zip code): matters	Name, telephone number, and facsimile number of the person to be contacted on involving this application (give area codes)

6. **Employer Identification Number (EIN):** ☐☐ — ☐☐☐☐☐☐☐

7. **Type of Applicant:** (enter appropriate letter in box) ☐

A. State
B. County
C. Municipal
D. Township
E. Interstate
F. Inter-municipal
G. Special District
H. Independent School Dist.
I. State Controlled Institution of Higher Learning
J. Private University
K. Indian Tribe
L. Individual
M. Profit Organization
N Nonprofit
O Public Housing Agency
P. Other (Specify):

8. **Type of Application:**

☐ New ☐ Continuation ☐ Revision

If Revision, enter appropriate letter(s) in box(es): ☐ ☐

A. Increase Award B. Decrease Award C. Increase Duration
D. Decrease Duration Other (specify):

9. **Name of Federal Agency:**

10. **Catalog of Federal Domestic Assistance Number:** ☐☐ — ☐☐☐

Title:

11. **Descriptive Title of Applicant's Project:**

12. **Areas Affected by Project** (cities, counties, States, etc.):

13. **Proposed Project:**		14. **Congressional Districts of:**	
Start Date	Ending Date	a. Applicant	b. Project

15. **Estimated Funding:**		
a. Federal	$	.00
b. Applicant	$	.00
c. State	$	.00
d. Local	$	.00
e. Other	$	.00
f. Program Income	$	.00
g. **Total**	$	.00

16. **Is Application Subject to Review by State Executive Order 12372 Process?**

a. **Yes** This pre-application/application was made available to the State Executive Order 12372 Process for review on:

Date:_____

b. **No** ☐ Program is not covered by E.O. 12372

or ☐ Program has not been selected by State for review.

17. **Is the Applicant Delinquent on Any Federal Debt?**

☐ Yes If "Yes," explain below or attach an explanation ☐ No

18. To the best of my knowledge and belief, all data in this application/pre-application are true and correct, the document has been duly authorized by the governing body of the applicant and the applicant will comply with the attached assurances if the assistance is awarded.

a. Typed Name of Authorized Representative	b. Title	c. Telephone Number
d. Signature of Authorized Representative		e. Date Signed

Previous Editions Not Usable
Authorized for Local Reproduction

form **SF-424** (4/92)
Prescribed by OMB Circular A-102

Instructions for the SF-424

Public reporting burden for this collection of information is estimated to average 45 minutes per response, including the time for reviewing instructions, searching existing data sources, gathering and maintaining the data needed, and completing and reviewing the collection of information. Please do not return your completed form to the Office of Management and Budget; send it to the address provided by the sponsoring agency .

This is a standard form used by applicants as a required face sheet for pre-applications and applications submitted for Federal assistance. It will be used by Federal agencies to obtain applicant certification that States which have established a review and comment procedure in response to executive Order 12372 and have selected the program to be included in their process, have been given an opportunity to review the applicant's submission.

Item Entry

1. Self-explanatory.
2. Date application submitted to Federal agency (or State if applicable) and applicant's control number (if applicable).
3. State use only (if applicable).

I4. If this application is to continue or revise an existing award, enter present Federal identifier number. If for a new project, leave blank.

5. Legal name of applicant, name of primary organizational unit which will undertake the assistance activity, complete address of the applicant, and name and telephone number of the person to contact on matters related to this application.
6. Enter Employer Identification Number (EIN) as assigned by the Internal Revenue Service.
7. Enter the appropriate letter in the space provided.
8. Check appropriate box and enter appropriate letter(s) in the space(s) provided:
   - "New" means a new assistance award.
   - "Continuation" means an extension for an additional funding budget period for a project with a projected completion date.
   - "Revision" means any change in the Federal Government's financial obligation or contingent liability from an existing obligation.
9. Name of Federal agency from which assistance is being requested with this application.
10. Use the Catalog of Federal Domestic Assistance number and title of the program under which assistance is requested.

I11. Enter a brief descriptive title of the project. If more than one program is involved, you should append an explanation on a separate sheet. If appropriate (e.g., construction or real property projects), attach a map showing project location. For pre-applications, use a separate sheet to provide a summary description of this project.

Item Entry

12. List only the largest political entities affected (e.g., State, counties, cities).
13. Self-explanatory.
14. List the applicant's Congressional District and any District(s) affected by the program or project.
15. Amount requested or to be contributed during the first funding/budget period by each contributor. Value of in-kind contributions should be included on appropriate lines as applicable. If the action will result in a dollar change to an existing award, indicate only the amount of the change. For decreases, enclose the amounts in parentheses. If both basic and supplemental amounts are included, show breakdown on an attached sheet. For multiple program funding, use totals and show breakdown using same categories as item 15.
16. Applicants should contact the State Single Point of Contact (SPOC) for Federal Executive Order 12372 to determine whether the application is subject to the State intergovernmental review process

I17. This question applies to the applicant organization, not the person who signs as the authorized representative. Categories of debt include delinquent audit disallowances, loans and taxes.

18. To be signed by the authorized representative of the applicant. A copy of the governing body's authorization for you to sign this application as official representative must be on file in the applicant's office. (Certain Federal agencies may require that this authorization be submitted as part of the application.)

Rural Housing and Economic Development Program (RHED)

Grant Budget

Rural Housing and Economic Development Grant Activities (List)	Sources of Funds					
	RHED Program	Other Federal Share	State Share	Local Share	Private Share	Total
	$	$	$	$	$	$
Grand Totals	$	$	$	$	$	$

Line Item Budget for Federal Funds for the Rural Housing and Economic Development Program

Cost Category	Activity 1 _____	Activity 2 _____	Activity 3 _____	Activity 4 _____	Activity 5 _____	Total Dollars
Personnel	$	$	$	$	$	$
Fringe Benefits						$
Travel						$
Equipment						$
Supplies						$
Contracts						$
Consultants						$
Other Direct Costs						$
Indirect Costs						$
Total Costs	$	$	$	$	$	$

Certification for a Drug-Free Workplace

U.S. Department of Housing and Urban Development

Applicant Name

Program/Activity Receiving Federal Grant Funding

Acting on behalf of the above named Applicant as its Authorized Official, I make the following certifications and agreements to the Department of Housing and Urban Development (HUD) regarding the sites listed below:

I certify that the above named Applicant will or will continue to provide a drug-free workplace by:

a. Publishing a statement notifying employees that the unlawful manufacture, distribution, dispensing, possession, or use of a controlled substance is prohibited in the Applicant's workplace and specifying the actions that will be taken against employees for violation of such prohibition.

b. Establishing an on-going drug-free awareness program to inform employees ---

(1) The dangers of drug abuse in the workplace;

(2) The Applicant's policy of maintaining a drug-free workplace;

(3) Any available drug counseling, rehabilitation, and employee assistance programs; and

(4) The penalties that may be imposed upon employees for drug abuse violations occurring in the workplace.

c. Making it a requirement that each employee to be engaged in the performance of the grant be given a copy of the statement required by paragraph a.;

d. Notifying the employee in the statement required by paragraph a. that, as a condition of employment under the grant, the employee will ---

(1) Abide by the terms of the statement; and

(2) Notify the employer in writing of his or her conviction for a violation of a criminal drug statute occurring in the workplace no later than five calendar days after such conviction;

e. Notifying the agency in writing, within ten calendar days after receiving notice under subparagraph d.(2) from an employee or otherwise receiving actual notice of such conviction. Employers of convicted employees must provide notice, including position title, to every grant officer or other designee on whose grant activity the convicted employee was working, unless the Federalagency has designated a central point for the receipt of such notices. Notice shall include the identification number(s) of each affected grant;

f. Taking one of the following actions, within 30 calendar days of receiving notice under subparagraph d.(2), with respect to any employee who is so convicted ---

(1) Taking appropriate personnel action against such an employee, up to and including termination, consistent with the requirements of the Rehabilitation Act of 1973, as amended; or

(2) Requiring such employee to participate satisfactorily in a drug abuse assistance or rehabilitation program approved for such purposes by a Federal, State, or local health, law enforcement, or other appropriate agency;

g. Making a good faith effort to continue to maintain a drug-free workplace through implementation of paragraphs a. thru f.

2. **Sites for Work Performance.** The Applicant shall list (on separate pages) the site(s) for the performance of work done in connection with the HUD funding of the program/activity shown above: Place of Performance shall include the street address, city, county, State, and zip code. Identify each sheet with the Applicant name and address and the program/activity receiving grant funding.)

Check here ☐ if there are workplaces on file that are not identified on the attached sheets.

I hereby certify that all the information stated herein, as well as any information provided in the accompaniment herewith, is true and accurate.
Warning: HUD will prosecute false claims and statements. Conviction may result in criminal and/or civil penalties.
(18 U.S.C. 1001, 1010, 1012; 31 U.S.C. 3729, 3802)

Name of Authorized Official	Title
Signature X	Date

form **HUD-50070** (3/98)
ref. Handbooks 7417.1. 7475.13. 7485.1 & .3

Certification of Payments to Influence Federal Transactions

U.S. Department of Housing and Urban Development
Office of Public and Indian Housing

Applicant Name

Program/Activity Receiving Federal Grant Funding

The undersigned certifies, to the best of his or her knowledge and belief, that:

(1) No Federal appropriated funds have been paid or will be paid, by or on behalf of the undersigned, to any person for influencing or attempting to influence an officer or employee of an agency, a Member of Congress, an officer or employee of Congress, or an employee of a Member of Congress in connection with the awarding of any Federal contract, the making of any Federal grant, the making of any Federal loan, the entering into of any cooperative agreement, and the extension, continuation, renewal, amendment, or modification of any Federal contract, grant, loan, or cooperative agreement.

(2) If any funds other than Federal appropriated funds have been paid or will be paid to any person for influencing or attempting to influence an officer or employee of an agency, a Member of Congress, an officer or employee of Congress, or an employee of a Member of Congress in connection with this Federal contract, grant, loan, or cooperative agreement, the undersigned shall complete and submit Standard Form-LLL, Disclosure Form to Report Lobbying, in accordance with its instructions.

(3) The undersigned shall require that the language of this certification be included in the award documents for all subawards at all tiers (including subcontracts, subgrants, and contracts under grants, loans, and cooperative agreements) and that all subrecipients shall certify and disclose accordingly.

This certification is a material representation of fact upon which reliance was placed when this transaction was made or entered into. Submission of this certification is a prerequisite for making or entering into this transaction imposed by Section 1352, Title 31, U.S. Code. Any person who fails to file the required certification shall be subject to a civil penalty of not less than $10,000 and not more than $100,000 for each such failure.

I hereby certify that all the information stated herein, as well as any information provided in the accompaniment herewith, is true and accurate.

Warning: HUD will prosecute false claims and statements. Conviction may result in criminal and/or civil penalties. (18 U.S.C. 1001, 1010, 1012; 31 U.S.C. 3729, 3802)

Name of Authorized Official	Title

Signature	Date
X	

Previous edition is obsolete

form HUD 50071 (3/98)
ref. Handboooks 7417.1, 7475.13, 7485.1, & 7485.3

Disclosure of Lobbying Activities

Approved by OMB 0348-0046

Complete this form to disclose lobbying activities pursuant to 31 U.S.C. 1352
(See reverse side for Instructions.)

Public Reporting Burden for this collection of information is estimated to average 30 minutes per response, including the time for reviewing instructions, searching existing data sources, gathering and maintaining the data needed, and completing and reviewing the collection of information. Please do not return your completed form to the Office of Management and Budget; send it to the address provided by the sponsoring agency .

1. Type of Federal Action:
- ☐ a. contract
- ☐ b. grant
- c. cooperative agreement
- d. loan
- e. loan guarantee
- f. loan insurance

2. Status of Federal Action:
- ☐ a. bid/offer/application
- ☐ b. initial award
- c. post-award

3. Report Type:
- ☐ a. initial filing
- ☐ b. material change

For Material Change Only:
year _____ quarter _____

date of last report _____

4. Name and Address of Reporting Entity:
☐ Prime ☐ Subawardee Tier _____ , if known:

Congressional District, if known:

5. If Reporting Entity in No. 4 is Subawardee, enter Name and Address of Prime:

Congressional District, if known:

6. Federal Department/Agency:

7. Federal Program Name/Description:

CFDA Number, if applicable: _____

8. Federal Action Number, if known:

9. Award Amount, if known:
$

10a. Name and Address of Lobbying Registrant
(if individual, last name, first name, MI):

b. Individuals Performing Services (including address if different from No. 10a.) (last name, first name, MI):

11. Information requested through this form is authorized by Sec.319, Pub. L. 101-121, 103 Stat. 750, as amended by sec. 10; Pub. L. 104-65, Stat. 700 (31 U.S.C. 1352). This disclosure of lobbying activities is a material representation of fact upon which reliance was placed by the above when this transaction was made or entered into. This disclosure is required pursuant to 31 U.S.C. 1352. This information will be reported to the Congress semiannually and will be available for public inspection. Any person who fails to file the required disclosure shall be subject to a civil penalty of not less than $10,000 and not more than $100,000 for each such failure.

Signature: _____

Print Name: _____

Title: _____

Telephone No.: _____

Date: _____

Federal Use Only:

Authorized for Local Reproduction
Standard Form-LLL (1/96)

Instructions for Completion of SF-LLL, Disclosure of Lobbying Activities

This disclosure form shall be completed by the reporting entity, whether subawardee or prime Federal recipient, at the initiation or receipt of a covered Federal action, or a material change to a previous filing, pursuant to title 31 U.S.C. section 1352. The filing of a form is required for each payment or agreement to make payment to any lobbying entity for influencing or attempting to influence an officer or employee of any agency, a Member of Congress, an officer or employee of Congress, or any employee of a Member of Congress in connection with a covered Federal action. Complete all items that apply for both the initial filing and material change report. Refer to the implementing guidance published by the Office of Management and Budget for additional information.

1. Identify the type of covered Federal action for which lobbying activity is and/or has been secured to influence the outcome of a covered Federal action.

2. Identify the status of the covered Federal action.

3. Identify the appropriate classification of this report. If this is a followup report caused by a material change to the information previously reported, enter the year and quarter in which the change occurred. Enter the date of the last previously submitted report by this reporting entity for this covered Federal action.

4. Enter the full name, address, city, state and zip code of the reporting entity. Include Congressional District, if known. Check the appropriate classification of the reporting entity that designates if it is, or expects to be, a prime or subaward recipient. Identify the tier of the subawardee, e.g., the first subawardee of the prime is the 1st tier. Subawards include but are not limited to subcontracts, subgrants and contract awards under grants.

5.If the organization filing the report in item 4 checks "Subawardee", then enter the full name, address, city, state and zip code of the prime Federal recipient, Include Congressional District, if known.

6. Enter the name of the Federal agency making the award or loan commitment. Include at least one organizational level below agency name, if known. For example, Department of Transportation, United States Coast Guard.

7. Enter the Federal program name or description for the covered Federal action (item 1). If known, enter the full Catalog of Federal Domestic Assistance (CFDA) number for grants, cooperative agreements, loans, and loan commitments.

8. Enter the most appropriate Federal identifying number available for the Federal action identified in item 1 (e.g., Request for Proposal (RFP) number; Invitation for Bid (IFB) number; grant announcement number; the contract, grant, or loan award number; the application proposal control number assigned by the Federal agency). Include prefixes, e.g., "RFP-DE-90-001."

9.For a covered Federal action where there has been an award or loan commitment by the Federal agency, enter the Federal amount of the award/loan commitment for the prime entity identified in item 4 or 5.

10. (a) Enter the full name, address, city, state and zip code of the registrant under the Lobbying Disclosure Act of 1995 engaged by the reporting entity identified in item 4 to influence the covered Federal action.

(b) Enter the full names of the individual(s) performing services, and include full address if different from 10 (a). Enter Last Name, First Name, and Middle Initial (MI).

11. The certifying official shall sign and date the form, print his/her name, title, and telephone number.

Applicant/Recipient Disclosure/Update Report

U.S. Department of Housing and Urban Development
Office of Ethics

OMB Approval No. 2510-0011
& 2506-0167 (exp. 1/31/99)

Instructions. (See Public Reporting Statement and Privacy Act Statement and detailed instructions on page 4.)

Part I Applicant/Recipient Information

Indicate whether this is an Initial Report ☐ **or an Update Report** ☐

1. Applicant/Recipient Name, Address, and Phone (include area code)	Social Security Number or Employer ID Number

2. Project Assisted/ to be Assisted (Project/Activity name and/or number and its location by Street address, City, and State)

3. Assistance Requested/Received	4. HUD Program	5. Amount Requested/Received
		$

Part II. Threshold Determinations -- Applicants Only

1. Are you requesting HUD assistance for a specific project or activity, as provided by 24 CFR Part 12, Subpart C, **and** have you received, or can you reasonably expect to receive, an aggregate amount of all forms of covered assistance from HUD, States, and units of general local government, in excess of $200,000 during the Federal fiscal year (October 1 through September 30) in which the application is submitted? ☐ **Yes** ☐ **No**

   If Yes, you must complete the remainder of this report.

   If No, you must sign the certification below and answer the next question.

   I hereby certify that this information is true. (Signature) _____ Date _____

2. Is this application for a specific housing project that involves other government assistance? ☐ **Yes** ☐ **No**

   If Yes, you must complete the remainder of this report.

   If No, you must sign this certification.

   I hereby certify that this information is true. (Signature) _____ Date _____

If your answers to both questions are No, you do not need to complete Parts III, IV, or V, but you must sign the certification at the end of the report.

Part III. Other Government Assistance Provided/Requested

Department/State/Local Agency Name and Address	Program	Type of Assistance	Amount Requested/Provided

Is there other government assistance that is reportable in this Part and in Part V, but that is reported only in Part V? ☐ Yes ☐ No

If there is no other government assistance, you must certify that this information is true.

I hereby certify that this information is true. (Signature) _____ Date _____

form **HUD-2880** (3/92)
ref. Sec 102, HRA 1989; PL. 101 - 235

Part IV. Interested Parties

Alphabetical list of all persons with a reportable financial interest in the project or activity (for individuals, give the last name first)	Social Security Number or Employee ID Number	Type of Participation in Project/Activity	Financial Interest in Project/Activity ($ and %)

If there are no persons with a reportable financial interest, you must certify that this information is true.

I hereby certify that this information is true. (Signature) _____ Date _____

form **HUD-2880** (3/92)

Part V. Report on Expected Sources and Uses of Funds

Source

If there are no sources of funds, you must certify that this information is true.

I hereby certify that this information is true. (Signature) _____ Date _____

Use

If there are no uses of funds, you must certify that this information is true.

I hereby certify that this information is true. (Signature) _____ Date _____

Certification

Warning: If you knowingly make a false statement on this form, you may be subject to civil or criminal penalties under Section 1001 of Title 18 of the United States Code. In addition, any person who knowingly and materially violates any required disclosure of information, including intentional non-disclosure, is subject to civil money penalty not to exceed $10,000 for each violation.

I certify that this information is true and complete.

Signature	Date

form **HUD-2880** (3/92)

Public reporting burden for this collection of information is estimated to average 2.5 hours per response, including the time for reviewing instructions, searching existing data sources, gathering and maintaining the data needed, and completing and reviewing the collection of information. This agency may not conduct or sponsor, and a person is not required to respond to, a collection information unless that collecton displays a valid OMB control number.

Privacy Act Statement. Except for Social Security Numbers (SSNs) and Employer Identification Numbers (EINs), the Department of Housing and Urban Development (HUD) is authorized to collect all the information required by this form under section 102 of the Department of Housing and Urban Development Reform Act of 1989, 42 U.S.C. 3531. Disclosure of SSNs and EINs is optional. The SSN or EIN is used as a unique identifier. The information you provide will enable HUD to carry out its responsibilities under Sections 102(b), (c), and (d) of the Department of Housing and Urban Development Reform Act of 1989, Pub. L. 101-235, approved December 15, 1989. These provisions will help ensure greater accountability and integrity in the provision of certain types of assistance administered by HUD. They will also help ensure that HUD assistance for a specific housing project under Section 102(d) is not more than is necessary to make the project feasible after taking account of other government assistance. HUD will make available to the public all applicant disclosure reports for five years in the case of applications for competitive assistance, and for generally three years in the case of other applications. Update reports will be made available along with the disclosure reports, but in no case for a period generally less than three years. All reports, both initial reports and update reports, will be made available in accordance with the Freedom of Information Act (5 U.S.C. §552) and HUD's implementing regulations at 24 CFR Part 15. HUD will use the information in evaluating individual assistance applications and in performing internal administrative analyses to assist in the management of specific HUD programs. The information will also be used in making the determination under Section 102(d) whether HUD assistance for a specific housing project is more than is necessary to make the project feasible after taking account of other government assistance. You must provide all the required information. Failure to provide any required information may delay the processing of your application, and may result in sanctions and penalties, including imposition of the administrative and civil money penalties specified under 24 CFR §12.34.

Note: This form only covers assistance made available by the Department. States and units of general local government that carry out responsibilities under Sections 102(b) and (c) of the Reform Act must develop their own procedures for complying with the Act.

Instructions (See Note 1 on last page.)

I. **Overview.** Subpart C of 24 CFR Part 12 provides for (1) initial reports from applicants for HUD assistance and (2) update reports from recipients of HUD assistance. An overview of these requirements follows.

A. Applicant disclosure (initial) reports: General. All applicants for assistance from HUD for a specific project or activity must make a number of disclosures, if the applicant meets a dollar threshold for the receipt of covered assistance during the fiscal year in which the application is submitted. The applicant must also make the disclosures if it requests assistance from HUD for a specific housing project that involves assistance from other governmental sources.

Applicants subject to Subpart C must make the following disclosures:

Assistance from other government sources in connection with the project,

The financial interests of persons in the project,

The sources of funds to be made available for the project, and

The uses to which the funds are to be put.

B. Update reports: General. All recipients of covered assistance must submit update reports to the Department to reflect substantial changes to the initial applicant disclosure reports.

C. Applicant disclosure reports: Specific guidance. The applicant must complete all parts of this disclosure form if **either** of the following **two** circumstances in paragraph 1. or 2., below, applies:

1.a. Nature of Assistance. The applicant submits an application for assistance for a specific project or activity (See Note 2) in which:

HUD makes assistance available to a recipient for a specific project or activity; or

HUD makes assistance available to an entity (other than a State or a unit of general local government), such as a public housing agency (PHA), for a specific project or activity, where the application is required by statute or regulation to be submitted to HUD for any purpose; **and**

b. Dollar Threshold. The applicant has received, or can reasonably expect to receive, an aggregate amount of all forms of assistance (See Note 3) from HUD, States, and units of general local government, in excess of $200,000 during the Federal fiscal year (October 1 through September 30) in which the application is submitted. (See Note 4)

2. The applicant submits an application for assistance for a specific housing project that involves other government assistance. (See Note 5) Note: There is no dollar threshold for this criterion: **any** other government assistance triggers the requirement. (See Note 6)

If the Application meets **neither** of these two criteria, the applicant need only complete Parts I and II of this report, as well as the certification at the end of the report. If the Application meets **either** of these criteria, the applicant must complete the entire report.

The applicant disclosure report must be submitted with the application for the assistance involved.

D. Update reports: Specific guidance. During the period in which an application for covered assistance is pending, or in which the assistance is being provided (as indicated in the relevant grant or other agreement), the applicant must make the following additional disclosures:

1. Any information that should have been disclosed in connection with the application, but that was omitted.

2. Any information that would have been subject to disclosure in connection with the application, but that arose at a later time, including information concerning an interested party that now meets the applicable disclosure threshold referred to in Part IV, below.

3. For changes in previously disclosed other government assistance:

For programs administered by the Assistant Secretary for Community Planning and Development, any change in other government assistance that exceeds the amount of such assistance that was previously disclosed by $250,000 or by 10 percent of the assistance (whichever is lower).

For all other programs, any change in other government assistance that exceeds the amount of such assistance that was previously disclosed.

4. For changes in previously disclosed financial interests, any change in the amount of the financial interest of a person that exceeds the amount of the previously disclosed interests by $50,000 or by 10 percent of such interests (whichever is lower).

5. For changes in previously disclosed sources or uses of funds:

a. For programs administered by the Assistant Secretary for Community Planning and Development:

Any change in a source of funds that exceeds the amount of all previously disclosed sources of funds by $250,000 or by 10 percent of those sources (whichever is lower); and

Any change in a use of funds under paragraph (b)(1)(iii) that exceeds the amount of all previously disclosed uses of funds by $250,000 or by 10 percent of those uses (whichever is lower).

b. For all programs, other than those administered by the Assistant Secretary for Community Planning and Development:

For projects receiving a tax credit under Federal, State, or local law, any change in a source of funds that was previously disclosed.

For all other projects, any change in a source of funds that exceeds the lower of:

The amount previously disclosed for that source of funds by $250,000, or by 10 percent of the amount previously disclosed for that source, whichever is lower; or

The amount previously disclosed for all sources of funds by $250,000, or by 10 percent of the amount previously disclosed for all sources of funds, whichever is lower.

c. For all programs, other than those administered by the Assistant Secretary for Community Planning and Development:

For projects receiving a tax credit under Federal, State, or local law, any change in a use of funds that was previously disclosed.

For all other projects, any change in a use of funds that exceeds the lower of:

The amount previously disclosed for that use of funds by $250,000, or by 10 percent of the amount previously disclosed for that use, whichever is lower; or

The amount previously disclosed for all uses of funds by $250,000, or by 10 percent of the amount previously disclosed for all uses of funds, whichever is lower.

Note: Update reports must be submitted within 30 days of the change requiring the update. The requirement to provide update reports only applies if the application for the underlying assistance was submitted on or after the effective date of Subpart C.

II. Line-by-Line Instructions.

A. Part I. Applicant/Recipient Information.

All applicants for HUD assistance specified in Section I.C.1.a., above, as well as all recipients required to submit an update report under Section I.D., above, must complete the information required by Part I. The applicant/recipient must indicate whether the disclosure is an initial or an update report. Line-by-line guidance for Part I follows:

1. Enter the full name, address, city, State, zip code, and telephone number (including area code) of the applicant/recipient. Where the applicant/recipient is an individual, the last name, first name, and middle initial must be entered. Entry of the applicant/recipient's SSN or EIN, as appropriate, is optional.

2. Applicants enter the name and full address of the project or activity for which the HUD assistance is sought. Recipients enter the name and full address of the HUD-assisted project or activity to which the update report relates. The most appropriate government identifying number must be used (e.g., RFP No.; IFB No.; grant announcement No.; or contract, grant, or loan No.) Include prefixes.

3. Applicants describe the HUD assistance referred to in Section I.C.1.a. that is being requested. Recipients describe the HUD assistance to which the update report relates.

4. Applicants enter the HUD program name under which the assistance is being requested. Recipients enter the HUD program name under which the assistance, that relates to the update report, was provided.

5. Applicants enter the amount of HUD assistance that is being requested. Recipients enter the amount of HUD assistance that has been provided and to which the update report relates. The amounts are those stated in the application or award documentation. NOTE: In the case of assistance that is provided pursuant to contract over a period of time (such as project-based assistance under section 8 of the United States Housing Act of 1937), the amount of assistance to be reported includes all amounts that are to be provided over the term of the contract, irrespective of when they are to be received.

Note: In the case of Mortgage Insurance under 24 CFR Subtitle B, Chapter II, the mortgagor is responsible for making the applicant disclosures, and the mortgagee is responsible for furnishing the mortgagor's disclosures to the Department. Update reports must be submitted directly to HUD by the mortgagor.

Note: In the case of the Project-Based Certificate program under 24 CFR Part 882, Subpart G, the owner is responsible for making the applicant disclosures, and the PHA is responsible for furnishing the owner's disclosures to HUD. Update reports must be submitted through the PHA by the owner.

B. Part II. Threshold Determinations — Applicants Only

Part II contains information to help the applicant determine whether the remainder of the form must be completed. **Recipients filing Update Reports should not complete this Part.**

1. The first question asks whether the applicant meets the Nature of Assistance and Dollar Threshold requirements set forth in Section I.C.1. above.

If the answer is Yes, the applicant must complete the remainder of the form. If the answer is No, the form asks the applicant to certify that its response is correct, and to complete the next question.

2. The second question asks whether the application is for a specific housing project that involves other government assistance, as described in Section I.C.2. above.

If the answer is Yes, the applicant must complete the remainder of the form. If the answer is No, the form asks the applicant to certify that its response is correct.

If the answer to both questions1 and 2 is No, the applicant need not complete Parts III, IV, or V of the report, but must sign the certification at the end of the form.

C. Part III. Other Government Assistance.

This Part is to be completed by both applicants filing applicant disclosure reports and recipients filing update reports. Applicants must report any other government assistance involved in the project or activity for which assistance is sought. Recipients must report any other government assistance involved in the project or activity, to the extent required under Section I.D.1., 2., or 3., above.

Other government assistance is defined in note 5 on the last page. For purposes of this definition, other government assistance is expected to be made available if, based on an assessment of all the circumstances involved, there are reasonable grounds to anticipate that the assistance will be forthcoming.

Both applicant and recipient disclosures must include all other government assistance involved with the HUD assistance, as well as any other government assistance that was made available before the request, but that has continuing vitality at the time of the request. Examples of this latter category include tax credits that provide for a number of years of tax benefits, and grant assistance that continues to benefit the project at the time of the assistance request.

The following information must be provided:

1. Enter the name and address, city, State, and zip code of the government agency making the assistance available. Include at least one organizational level below the agency name. For example, U.S. Department of Transportation, U.S. Coast Guard; Department of Safety, Highway Patrol.

2. Enter the program name and any relevant identifying numbers, or other means of identification, for the other government assistance.

3. State the type of other government assistance (e.g., loan, grant, loan insurance).

4. Enter the dollar amount of the other government assistance that is, or is expected to be, made available with respect to the project or activities for which the HUD assistance is sought (applicants) or has been provided (recipients).

If the applicant has no other government assistance to disclose, it must certify that this assertion is correct.

To avoid duplication, if there is other government assistance under this Part and Part V, the applicant/recipient should check the appropriate box in this Part and list the information in Part V, clearly designating which sources are other government assistance.

D. Part IV. Interested Parties.

This Part is to be completed by both applicants filing applicant disclosure reports and recipients filing update reports.

Applicants must provide information on:

(1) All developers, contractors, or consultants involved in the application for the assistance or in the planning, development, or implementation of the project or activity and

(2) any other person who has a financial interest in the project or activity for which the assistance is sought that exceeds $50,000 or 10 percent of the assistance (whichever is lower).

Recipients must make the additional disclosures refferred to in Section I.D.1.,2., or 4, above.

Note: A financial interest means any financial involvement in the project or activity, including (but not limited to) situations in which an individual or entity has an equity interest in the project or activity, shares in any profit on resale or any distribution of surplus cash or other assets of the project or activity, or receives compensation for any goods or services provided in connection with the project or activity. Residency of an individual in housing for which assistance is being sought is not, by itself, considered a covered financial interest.

The information required below must be provided.

1. Enter the full names and addresses of all persons referred to in paragraph (1) or (2) of this Part. If the person is an entity, the listing must include the full name of each officer, director, and principal stockholder of the entity. All names must be listed alphabetically, and the names of individuals must be shown with their last names first.

2. Entry of the Social Security Number (SSN) or Employee Identification Number (EIN), as appropriate, for each person listed is optional.

3. Enter the type of participation in the project or activity for each person listed: i.e., the person's specific role in the project (e.g., contractor, consultant, planner, investor).

4. Enter the financial interest in the project or activity for each person listed. The interest must be expressed both as a dollar amount and as a percentage of the amount of the HUD assistance involved.

If the applicant has no persons with financial interests to disclose, it must certify that this assertion is correct.

5. Part V. Report on Sources and Uses of Funds. This Part is to be completed by both applicants filing applicant disclosure reports and recipients filing update reports.

The applicant disclosure report must specify all expected sources of funds — both from HUD and from any other source — that have been, or are to be, made available for the project or activity. Non-HUD sources of funds typically include (but are not limited to) other government assistance referred to in Part III, equity, and amounts from foundations and private contributions. The report must also specify all expected uses to which funds are to be put. All sources and uses of funds must be listed, if, based on an assessment of all the circumstances involved, there are reasonable grounds to anticipate that the source or use will be forthcoming.

Note that if any of the source/use information required by this report has been provided elsewhere in this application package, the applicant need not repeat the information, but need only refer to the form and location to incorporate it into this report. (It is likely that some of the information required by this report has been provided on SF 424A, and on various budget forms accompanying the application.) If this report requires information beyond that provided elsewhere in the application package, the applicant must include in this report all the additional information required.

Recipients must submit an update report for any change in previously disclosed sources and uses of funds as provided in Section I.D.5., above.

General Instructions — sources of funds

Each reportable source of funds must indicate:

a. The name and address, city, State, and zip code of the individual or entity making the assistance available. At least one organizational level below the agency name should be included. For example, U.S. Department of Transportation, U.S. Coast Guard; Department of Safety, Highway Patrol.

b. The program name and any relevant identifying numbers, or other means of identification, for the assistance.

c. The type of assistance (e.g., loan, grant, loan insurance).

Specific instructions — sources of funds.

(1) For programs administered by the Assistant Secretaries for Fair Housing and Equal Opportunity and Policy Development and Research, each source of funds must indicate the total amount of approved, and received; and must be listed in descending order according to the amount indicated.

(2) For programs administered by the Assistant Secretaries for Housing-Federal Housing Commissioner, Community Planning and Development, and Public and Indian Housing, each source of funds must indicate the total amount of funds involved, and must be listed in descending order according to the amount indicated.

(3) If Tax Credits are involved, the report must indicate all syndication proceeds and equity involved.

General instructions—uses of funds.

Each reportable use of funds must clearly identify the purpose to which they are to be put. Reasonable aggregations may be used, such as "total structure" to include a number of structural costs, such as roof, evevators, exterior masonry, etc.

Specific instructions -- uses of funds.

(1) For programs administered by the Assistant Secretaries for Fair Housing and Equal Opportunity and Policy Development and Research, each use of funds must indicate the total amount of funds involved; must be broken down by amount committed, budgeted, and planned; and must be listed in descending order according to the amount indicated.

(ii) For programs administered by the Assistant Secretaries for Housing-Federal Housing Commissioner, Community Planning and Development, and Public and Indian Housing, each use of funds must indicate the total amount of funds involved and must be listed in descending order according to the amount involved.

(iii) If any program administered by the Assistant Secretary for Housing-Federal Housing Commissioner is involved, the report must indicate all uses paid from HUD sources and other sources, including syndication proceeds. Uses paid should include the following amounts.

AMPO
Architect's fee — design
Architect's fee — supervision
Bond premium
Builder's general overhead
Builder's profit
Construction interest
Consultant fee
Contingency Reserve
Cost certification audit fee
FHA examination fee
FHA inspection fee
FHA MIP
Financing fee
FNMA / GNMA fee
General requirements
Insurance
Legal — construction
Legal — organization
Other fees
Purchase price
Supplemental management fund
Taxes
Title and recording
Operating deficit reserve
Resident initiative fund
Syndication expenses
Working capital reserve
Total land improvement
Total structures
Uses paid from syndication must include the following amounts:
Additional acquisition price and expenses
Bridge loan interest
Development fee
Operating deficit reserve
Resident initiative fund
Syndication expenses
Working capital reserve

Footnotes:

1. All citations are to 24 CFR Part 12, which was published in the Federal Register on March 14, 1991 at 56 Fed. Reg. 11032.

2. A list of the covered assistance programs can be found at 24 CFR §12.30, or in the rules or administrative instructions governing the program involved. Note: The list of covered programs will be updated perodically.

3. Assistance means any contract, grant, loan, cooperative agreement, or other form of assistance, including the insurance or guarantee of a loan or mortgage, that is provided with respect to a specific project or activity under a program administered by the Department. The term does not include contracts, such as procurements contracts, that are subject to the Federal Acquisition Regulation (FAR) (48 CFR Chapter 1).

4. See 24 CFR §§12.32 (a)(2) and (3) for detailed guidance on how the threshold is calculated.

5. "Other government assistance" is defined to include any loan, grant, guarantee, insurance, payment, rebate, subsidy, credit, tax benefit, or any other form of direct or indirect assistance from the Federal government (other than that requested from HUD in the application), a State, or a unit of general local government, or any agency or instrumentality thereof, that is, or is expected to be made, available with respect to the project or activities for which the assistance is sought.

6. For further guidance on this criterion, and for a list of covered programs, see 24 CFR §12.50.

7. For purposes of Part 12, a person means an individual (including a consultant, lobbyist, or lawyer); corporation; company; association; authority; firm; partnership; society; State, unit of general local government, or other government entity, or agency thereof (including a public housing agency); Indian tribe; and any other organization or group of people.

Applicant Nondiscrimination Certifications

As the duly authorized representative of the applicant, I certify that the applicant:

1. Will comply with all Federal statutes relating to nondiscrimination. These include but are not limited to:

   a) Title VI of the Civil Rights Act of 1964 (42 U.S.C. 2000d) (Nondiscrimination in Federally Assisted Programs) and regulations pursuant thereto (24 CFR Part 1), which prohibit discrimination on the basis of race, color, or national origin;

   b) Section 504 of the Rehabilitation Act of 1973, as amended (29 U.S.C. 794), and implementing regulations at 24 CFR Part 8, which prohibit discrimination on the basis of handicap;

   c) the Age Discrimination Act of 1975, as amended (42 U.S.C. 6101-07) and implementing regulations at 24 CFR 146, which prohibit discrimination on the basis of age; and,

   d) the requirements of any other nondiscrimination statute(s) which may apply to the application.

2. Will comply with the requirements of the Fair Housing Act (42 U.S.C. 3601-19), as amended, and implementing regulations at 24 CFR Part 100, et seq., which prohibit discrimination in housing on the basis of race, color, religion, sex, handicap, familial status, or national origin, and administer its programs and activities relating to housing in a manner to affirmatively further fair housing.

3. Will comply with Section 109 of the Housing and Community Development Act of 1974, as amended, (42U.S.C. 5301-5322), which states that no person shall on the ground of race, color, national origin, religion, or sex be excluded from participation in, be denied the benefits of, or be subjected to discrimination under any program or activity funded in whole or in part with funds made available under this title.

Signature of Authorized Certifying Official X	Applicant
Title	Date

form HUD-40076-RH (02/24/99)

Certification Regarding Debarment and Suspension

U.S. Department of Housing and Urban Development

Certification A: Certification Regarding Debarment, Suspension, and Other Responsibility Matters - Primary Covered Transactions

1. The prospective primary participant certifies to the best of its knowledge and belief that its principals;

a. Are not presently debarred, suspended, proposed for debarment, declared ineligible, or voluntarily excluded from covered transactions by any Federal debarment or agency;

b. Have not within a three-year period preceding this proposal, been convicted of or had a civil judgment rendered against them for commission of fraud or a criminal offense in connection with obtaining, attempting to obtain, or performing a public (Federal, State, or local) transaction or contract under a public transaction; violation of Federal or State antitrust statutes or commission of embezzlement, theft, forgery, bribery, falsification, or destruction of records, making false statements, or receiving stolen property;

c. Are not presently indicted for or otherwise criminally or civilly charged by a governmental entity (Federal, State, or local) with commission of any of the offenses enumerated in paragraph (1)(b) of this certification; and

d. Have not within a three-year period preceding this application/proposal had one or more public transactions (Federal, State, or local) terminated for cause or default.

2. Where the prospective primary participant is unable to certify to any of the statements in this certification, such prospective participant shall attach an explanation to this proposal.

Instructions for Certification (A)

1. By signing and submitting this proposal, the prospective primary participant is providing the certification set out below.

2. The inability of a person to provide the certification required below will not necessarily result in denial of participation in this covered transaction. The prospective participant shall submit an explanation of why it cannot provide the certification set out below. The certification or explanation will be considered in connection with the department or agency's determination whether to enter into this transaction. However, failure of the prospective primary participant to furnish a certification or an explanation shall disqualify such person from participation in this transaction.

3. The certification in this clause is a material representation of fact upon which reliance was place when the department or agency determined to enter into this transaction. If it is later determined that the prospective primary participant knowingly rendered an erroneous certification, in addition to other remedies available to the Federal Government, the department or agency may terminate this transaction for cause of default.

4. The prospective primary participant shall provide immediate written notice to the department or agency to whom this proposal is submitted if at any time the prospective primary participant learns that its certification was erroneous when submitted or has become erroneous by reason of changed circumstances.

5. The terms **covered transaction, debarred, suspended, ineligible, lower tier covered transaction, participant, person, primary covered transaction, principal, proposal, and voluntarily excluded**, as used in this clause, have the meanings set out in the Definitions and Coverage sections of the rules implementing Executive Order 12549. You may contact the department or agency to which this proposal is being submitted for assistance in obtaining a copy of these regulations.

6. The prospective primary participant agrees by submitting this proposal that, should the proposed covered transaction be entered into, it shall not knowingly enter into any lower tier covered transaction with a person who is debarred, suspended, declared ineligible, or voluntarily excluded from participation in this covered transaction, unless authorized by the department or agency entering into this transaction.

7. The prospective primary participant further agrees by submitting this proposal that it will include the clause titled "Certification Regarding Debarment, Suspension, Ineligibility and Voluntary Exclusion - Lower Tier Covered Transaction," provided by the department or agency entering into this covered transaction, without modification, in all lower tier covered transactions and in all solicitations for lower tier covered transactions.

8. A participant in a covered transaction may rely upon a certification of a prospective participant in a lower tier covered transaction that it is not debarred, suspended, ineligible, or voluntarily excluded from the covered transaction, unless it knows that the certification is erroneous. A participant may decide the method and frequency by which it determines this eligibility of its principals. Each participant may, but is not required to, check the Nonprocurement List.

9. Nothing contained in the foregoing shall be construed to require establishment of a system of records in order to render in good faith the certification required by this clause. The knowledge and information of a participant is not required to exceed that which is normally possessed by a prudent person in the ordinary course of business dealings.

10. Except for transactions authorized under paragraph (6) of these instructions, if a participant in a covered transaction knowingly enters into a lower tier covered transaction with a person who is suspended, debarred, ineligible, or voluntarily excluded from participation in this transaction, in addition to other remedies available to the Federal Government, the department or agency may terminate this transaction for cause of default.

Certification B: Certification Regarding Debarment, Suspension, Ineligibility and Voluntary Exclusion - Lower Tier Covered Transactions

1. The prospective lower tier participant certifies, by submission of this proposal, that neither it nor its principals is presently debarred, suspended, proposed for debarment, declared ineligible, or voluntarily excluded from participation in this transaction by any Federal department or agency.

2. Where the prospective lower tier participant is unable to certify to any of the statements in this certification, such prospective participant shall attach an explanation to this proposal.

Instructions for Certification (B)

1. By signing and submitting this proposal, the prospective lower tier participant is providing the certification set out below.

2. The certification in this clause is a material representation of fact upon which reliance was placed when this transaction was entered into. If it is later determined that the prospective lower tier participant knowingly rendered an erroneous certification, in addition to other remedies available to the Federal Government, the department or agency with which this transaction originated may pursue available remedies, including suspension and/or debarment.

3. The prospective lower tier participant shall provide immediate written notice to the person to which this proposal is submitted if at any time the prospective lower tier participant learns that its certification was erroneous when submitted or has become erroneous by reason of changed circumstances.

4. The terms **covered transaction, debarred, suspended, ineligible, lower tier covered transaction, participant, person, primary covered transaction, principal, proposal, and voluntarily excluded**, as used in this clause, have the meanings set out in the Definitions and Coverage sections of rules implementing Executive Order 12549. You may contact the person to which this proposal is submitted for assistance in obtaining a copy of these regulations.

5. The prospective lower tier participant agrees by submitting this proposal that, should the proposed covered transaction be entered into, it shall not knowingly enter into any lower tier covered transaction with a person who is debarred, suspended, declared ineligible, or voluntarily excluded from participation in this covered transaction, unless authorized by the department or agency with which this transaction originated.

6. The prospective lower tier participant further agrees by submitting this proposal that it will include this clause titled "Certification Regarding Debarment, Suspension, Ineligibility and Voluntary Exclusion - Lower Tier Covered Transaction," without modification, in all lower tier covered transactions and in all solicitations for lower tier covered transactions.

7. A participant in a covered transaction may rely upon a certification of a prospective participant in a lower tier covered transaction that it is not debarred, suspended, ineligible, or voluntarily excluded from the covered transaction, unless it knows that the certification is erroneous. A participant may decide the method and frequency by which it determines the eligibility of its principals. Each participant may, but is not required to, check the Nonprocurement List.

8. Nothing contained in the foregoing shall be construed to require establishment of a system of records in order to render in good faith the certification required by this clause. The knowledge and information of a participant is not required to exceed that which is normally possessed by a prudent person in the ordinary course of business dealings.

9. Except for transactions authorized under paragraph (5) of these instructions, if a participant in a lower covered transaction knowingly enters into a lower tier covered transaction with a person who is suspended, debarred, ineligible, or voluntarily excluded from participation in this transaction, in addition to other remedies available to the Federal Government, the department or agency with which this transaction originated may pursue available remedies including suspension and/or debarment.

Applicant	Date

Signature of Authorized Certifying Official	Title

Acknowledgment of Application Receipt

U.S. Department of Housing and Urban Development

Type or clearly print the Applicant's name and full address in the space below.

(fold line)

Type or clearly print the following information:

Name of the Federal Program to which the applicant is applying: _____

To Be Completed by HUD

☐ HUD received your application by the deadline and will consider it for funding. In accordance with Section 103 of the Department of Housing and Urban Development Reform Act of 1989, no information will be released by HUD regarding the relative standing of any applicant until funding announcements are made. However, you may be contacted by HUD after initial screening to permit you to correct certain application deficiencies.

☐ HUD did not receive your application by the deadline; therefore, your application will not receive further consideration. Your application is:

- ☐ Enclosed
- ☐ Being sent under separate cover

Processor's Name _____

Date of Receipt _____

Page no: ☐

Environmental Review Assurances

The award of funds under this program is subject to the environmental review requirements of 24 CFR part 50. These requirements only apply to grant-funded projects fully or partially funded by HUD, undertaken by grantees and all tiers of subgrantees and subcontractors.

When a project is limited to activities described in 24 CFR 50.19, it does not require an environmental review. All other activities (for example, acquisition of real property, construction and alteration) are subject to an environmental review. Since the approval of the initial grants in this program must occur prior to the identification of properties to be treated, as is provided for in 24 CFR 50.3(h), the applicant hereby agrees that it will assist HUD to comply with 24 CFR part 50, and that the applicant shall:

1. Advise HUD of all projects requiring a review under 24 CFR part 50 prior to their approval and supply HUD with all available and relevant information necessary for HUD to perform for each property any environmental review required by 24 CFR part 50;

2. Carry out mitigating measures required by HUD or select an alternate property or project;

3. Not acquire, rehabilitate, convert, lease, repair or construct property, nor commit or expend HUD or local funds for these program activities on a HUD-assisted project until HUD has completed an environmental review to the extent required under 24 CFR 50 and has given notification of its approval in accordance with 24 CFR 50.3(h)(3); and

4. Include the above requirements in all subgrants and subcontracts.

Signature of Authorized Certifying Official X	Applicant
Title	Date

form HUD-40076-RH (02/24/99)

[FR Doc. 99–5537 Filed 3–5–99; 8:45 am]
BILLING CODE 4210–29–C

federal register

Monday
March 8, 1999

Part VIII

Department of Housing and Urban Development

Notice of Funding Availability; Family Self-Sufficiency (FSS) Program Coordinators for the Section 8 Rental Certificate and Rental Voucher Programs Fiscal Year 1999; Notice

DEPARTMENT OF HOUSING AND URBAN DEVELOPMENT

[Docket No. FR–4416–N–01]

Notice of Funding Availability; Family Self-Sufficiency (FSS) Program Coordinators for the Section 8 Rental Certificate and Rental Voucher Programs Fiscal Year 1999

AGENCY: Office of the Assistant Secretary for Public and Indian Housing, HUD.

ACTION: Notice of funding availability for fiscal year (FY) 1999 for Section 8 Family Self-Sufficiency Program coordinators.

SUMMARY: *Purpose of Program.* The Section 8 FSS program is intended to promote the development of local strategies to coordinate the use of assistance under the Section 8 rental certificate and rental voucher programs with public and private resources to enable participating families to achieve economic independence and self-sufficiency. An FSS program coordinator assures that program participants are linked to the supportive services they need to achieve self-sufficiency.

Available Funds. This NOFA announces the availability of approximately $32 million in Fiscal Year (FY) 1999 to fund Section 8 Family Self-Sufficiency (FSS) program coordinators.

Eligible Applicants. Public housing agencies (HAs) eligible to receive funding under this NOFA are only those that received funding under the FY 98 NOFA for Section 8 FSS Program Coordinators and those HAs authorized through their HUD-approved FSS Action Plan to administer Section 8 FSS programs of at least 25 FSS slots. Under this NOFA, both the voluntary Section 8 FSS slots and the mandatory Section 8 FSS slots reflected in the HA's HUD-approved FSS Action Plan are counted in determining the HA's Section 8 FSS program size. HAs with Section 8 FSS programs of fewer than 25 approved slots also may receive funding under this NOFA, if they are applying jointly with one or more other HAs, so that between or among the HAs they have HUD approval to administer at least 25 Section 8 FSS slots. There is no maximum Section 8 program size limit for HAs eligible to apply for funding under this NOFA.

Indian Housing Authorities (IHAs) are not eligible for funding under this NOFA since the Native American Housing Assistance and Self Determination Act of 1996 does not allow HUD to enter into new Annual Contributions Contracts (ACCs) with IHAs after September 30, 1997.

Application Deadline. The application deadline for the FSS Programs Coordinators is May 7, 1999, at the time described under section I of Additional Information of this NOFA.

ADDITIONAL INFORMATION:

I. Application Due Date, Application Kits, and Technical Assistance

Application Due Date. The application deadline for the Section 8 FSS Programs Coordinators is May 7, 1999, at the time described in section I. of this NOFA. The application deadline is firm as to date and hour. In the interest of fairness to all competing HAs, HUD will treat as ineligible for consideration any application that is not received by the application deadline. Applicants should take this practice into account and make early submission of their materials to avoid any risk of loss of eligibility brought about by unanticipated delays or other delivery-related problems. HUD will not accept, at any time during the NOFA competition, application materials sent via facsimile (FAX) transmission.

Address for Submitting Applications. The original completed application should be submitted to the HA's local HUD Field Office HUB (Attention: HUB, Director of Public Housing) or local HUD Field Office Program Center (Attention: Program Center Coordinator). Throughout this NOFA, the Field Office HUBs and Program Centers will be referred to as the local HUD Field offices. Applicants should not submit any copies of their applications to HUD Headquarters.

Mailed Applications. Applications will be considered timely filed if postmarked on or before 12 midnight on the application due date and received by the HA's local HUD Field Office on or within ten (10) days of the application due date.

Applications Sent by Overnight/Express Mail Delivery. Applications sent by overnight delivery or express mail will be considered timely filed if received by the appropriate local HUD Field Office before or on the application due date, or upon submission of documentary evidence that they were placed in transit with the overnight delivery service by no later than the specified application due date.

Hand Carried Applications. Applications must be delivered to the appropriate local HUD Field Office by 6:00 pm local time on the due date. Hand carried applications will be accepted during normal business hours before the application due date. On the application due date, business hours will be extended to 6:00 pm.

For Application Kits, Further Information and Technical Assistance: There is no application kit for this NOFA. For answers to your questions, you may contact either the Public and Indian Housing Resource Center at 1–800–955–2232 or the HUB Director of Public Housing or the Program Center Coordinator in the local HUD Field Office. Hearing- or speech-impaired individuals may call HUD's TTY number 1–800–877–8339 (the Federal Information Relay Service TTY). Information can be accessed via the Internet at http://www.hud.gov. Prior to the application deadline, staff at the numbers given above will be available to provide general guidance, but not guidance in actually preparing the application. Following selection, but prior to award, HUD staff will be available to assist in clarifying or confirming information that is a prerequisite to the offer of an award by HUD.

II. Amount Allocated

For FY 1999, $32,001,504 is available for HA administrative fees for Section 8 FSS program coordinators. This amount is composed of $24.6 million from the Departments of Veterans Affairs and Housing and Urban Development, and Independent Agencies Appropriations Act, 1999 (Pub. L. 105–276, approved October 21, 1998), $7,238,212 in FY 1998 carryover authority from the Departments of Veterans Affairs and Housing and Urban Development, and Independent Agencies Appropriations Act, 1998 (Pub. L. 105–65, approved October 27, 1997), and $163,292 carryover authority from the Departments of Veterans Affairs and Housing and Urban Development, and Independent Agencies Act, 1997 (Pub. L. 104–204, approved September 26, 1996). Of the approximately $32 million being made available in FY 1999, approximately $19 million will be provided to those HAs that received funds in response to the FY 98 NOFA. This is the sixth fiscal year of funding for Section 8 FSS program coordinators.

HUD Corrections to Funding Provided Under the FY 98 NOFA

HUD has determined that the funding reserved under the FY 98 Section 8 FSS Program Coordinator NOFA for the Pulaski County (Arkansas) Housing Authority is an amount $5,173 lower than the HA should have received under the NOFA, and funding to the East St. Louis (Illinois) Housing Authority is $8,905 less than the HA should have received. HUD believes that this

underfunding should be corrected; therefore, prior to funding any applications under the FY 99 Section 8 FSS Program Coordinator NOFA, HUD will provide $5,173 to the Pulaski County Housing Authority and $8,905 to the East St. Louis Housing Authority to correct the underfunding. If prior to award of funding under the FY 99 Section 8 FSS NOFA, HUD determines that any other HAs have also been underfunded in amounts awarded under the FY 98 FSS Program Coordinator NOFA, the Department will increase funding to the amount that the HA should have received under the FY 98 FSS NOFA with funding available under the FY 99 FSS NOFA.

III. Program Description; Eligible Applicants; Eligible Activities

(A) Program Description

In recent years, HUD provided funding for Section 8 FSS program coordinators to HAs with Section 8 programs of fewer than 1,000 units. The FY 1994 and FY 1995 funds were awarded to these HAs based on a request for funding, and all complete applications were funded. The FY 1996 funds were awarded based on a competitive NOFA. In FY 1996, state and regional HAs that administered more than 1,000 rental vouchers and certificates, but fewer than 1,000 mandatory FSS slots, were also eligible to apply, and some received funding. In FY 1997, HUD allocated funds for Section 8 FSS program coordinators to allow HAs that were previously funded to continue to pay a Section 8 FSS coordinator. Since funding for Section 8 FSS program coordinators was limited, HUD did not accept applications from HAs that were not previously funded. In FY 1998 HUD awarded funds to HAs that were funded for Section 8 FSS program coordinators in FY 1997 to continue to pay for an FSS coordinator for another year and was also able to fund additional eligible small HAs and state and regional HAs that did not receive Section 8 FSS program coordinator funding in the previous year.

HUD determined to make a sufficient amount available under this NOFA to enable HAs, including state and regional HAs, with approval to administer Section 8 FSS programs of at least 25 slots, to hire up to one Section 8 FSS program coordinator for one year at a reasonable cost, as determined by the HA and HUD based on salaries for similar positions in the locality. HUD approval to administer a Section 8 FSS program of a certain size is obtained when HUD approves the HA's Action Plan. In its Action Plan the HA indicates the number of families it will serve in its Section 8 FSS program, through both mandatory and voluntary slots. There is no maximum Section 8 rental certificate/voucher program size limit for HAs eligible to apply for funding under this NOFA. Each eligible HA is limited to an award of $46,350 under this NOFA, except that if HAs apply jointly, the maximum applies to the application as a whole, not to each HA.

(B) Eligible Applicants

All HAs that received funding under the FY 98 NOFA for Section 8 FSS program coordinators will be funded in FY 1999, except those HAs submitting applications that are ineligible under Section VII.(C) of this NOFA, provided the HA certifies on the required Attachment A certification of this NOFA, subject to HUD verification, that it has hired an FSS program coordinator with funding previously awarded for that purpose and has made progress in implementing the FSS program demonstrated by having completed activities in each of the categories in section 2 of the required Attachment A certification. The HAs funded in FY 98 will receive 103 percent of FY 98 funding (not to exceed $46,350) unless the HA submits a request for a higher or lower amount, subject to the $46,350 maximum. HUD will not provide FY 99 funding to any HA that received Section 8 FSS Program Coordinator funding in FY 98 that does not comply with all of the above requirements.

HAs, including state and regional HAs, that did not receive FSS coordinator funding in FY 98 are eligible to apply under this NOFA if the HA has a HUD-approved FSS Action Plan authorizing the HA to administer a Section 8 FSS program of at least 25 Section 8 FSS slots. HAs with HUD approval to administer Section 8 FSS programs of fewer than 25 slots may also apply if they apply jointly with one or more other HA so that between or among the HAs they have HUD approval to administer at least 25 Section 8 FSS slots. If HAs apply jointly, the $46,350 maximum amount that may be requested applies to the application as a whole, not to each HA separately. Joint applicants must specify a lead co-applicant which will receive and administer the FSS program coordinator funding.

HUD is opening eligibility for funding under this NOFA to HAs with larger Section 8 rental certificate/voucher programs because it believes that this action will support welfare reform activities across the nation. The FSS program has been found to be a critical element in welfare reform efforts in many communities.

HUD is requiring that applicants under this NOFA have HUD approval to administer Section 8 FSS programs of at least 25 FSS slots to ensure that the Section 8 FSS program coordinator funds are used in a cost-effective manner. The Department expects that Section 8 FSS programs of less than 25 FSS slots can be managed within HA resources.

(C) Eligible Activities

Funds are available under this NOFA to employ or otherwise retain the services of up to one Section 8 FSS program coordinator for one year. A part-time Section 8 FSS program coordinator may be retained where appropriate. Under the Section 8 FSS program, HAs are required to use Section 8 rental assistance together with public and private resources to provide supportive services to enable participating families to achieve economic independence and self-sufficiency. Effective delivery of supportive services is a critical element in a successful FSS program.

IV. Program Requirements

(A) Program Coordinator Role

HAs administering the FSS program use program coordinating committees (PCCs) to assist them to secure resources and implement the FSS program. The PCC is made up of representatives of local government, job training and employment agencies, local welfare agencies, educational institutions, child care providers, nonprofit service providers, and businesses.

An FSS program coordinator works with the PCC and with local service providers to assure that program participants are linked to the supportive services they need to achieve self-sufficiency. The FSS program coordinator may ensure, through case management, that the services included in participants' contracts of participation are provided on a regular, ongoing and satisfactory basis, and that participants are fulfilling their responsibilities under the contracts.

(B) Staffing Guidelines

Under normal circumstances, a full-time FSS program coordinator should be able to serve approximately 50 FSS participants, depending on the coordinator's case management functions.

(C) Eligible Applicants With HUD-Approved Exceptions to Mandatory Minimum Program Size

If HUD has approved either a full or partial exception to implementing a Section 8 FSS program of the mandatory minimum size for an eligible HA, solely because of lack of funds for reasonable administrative costs, the approval of the exception is hereby rescinded after funding for a Section 8 FSS program coordinator is awarded under this NOFA.

(D) Other Requirements

(1) *Compliance With Fair Housing and Civil Rights Laws.* All applicants must comply with all fair housing and civil rights laws, statutes, regulations, and executive orders as enumerated in 24 CFR 5.105(a). If an applicant: (a) has been charged with a systemic violation of the Fair Housing Act by the Secretary alleging ongoing discrimination; (b) is the defendant in a Fair Housing Act lawsuit filed by the Department of Justice alleging an ongoing pattern or practice of discrimination; or (c) has received a letter of noncompliance findings under Title VI of the Civil Rights Act of 1964, section 504 of the Rehabilitation Act of 1973, or section 109 of the Housing and Community Development Act of 1974, the applicant's application will not be evaluated under this NOFA if, prior to the application deadline, the charge, lawsuit, or letter of findings has not been resolved to the satisfaction of the Department. HUD's decision regarding whether a charge, lawsuit, or a letter of findings has been satisfactorily resolved will be based upon whether appropriate actions have been taken necessary to address allegations of ongoing discrimination in the policies or practices involved in the charge, lawsuit, or letter of findings.

(2) *Additional Nondiscrimination Requirements.* Applicants must comply with the Americans with Disabilities Act, and Title IX of the Education Amendments Act of 1972. In addition to compliance with the civil rights requirements listed at 24 CFR section 5.105, each successful applicant must comply with the nondiscrimination in employment requirements of Title VII of the Civil Rights Act of 1964, U.S.C. sections 2000e *et seq.*; the Equal Pay Act, 29 U.S.C. section 206(d); the Age Discrimination in Employment Act of 1967, 29 U.S.C. sections 621 *et seq.*, and Titles I and V of the Americans with Disabilities Act, 42 U.S.C. sections 12101 *et seq.*

(3) *Affirmatively Furthering Fair Housing.* Each successful applicant will have a duty to affirmatively further fair housing. After the application is approved, applicants will be required to identify the specific steps that they will take to (1) address the elimination of impediments to fair housing that were identified in the jurisdiction's Analysis of Impediments (AI) to Fair Housing Choice; (2) remedy discrimination in housing; or (3) promote fair housing rights and fair housing choice. Further, applicants have a duty to carry out the specific activities cited in their responses in a manner which will affirmatively further fair housing.

V. Application Selection Process

The funds available under this NOFA are not being awarded on a competitive basis. The Department anticipates that there may be sufficient funds available under the NOFA to fund all applications that meet the NOFA requirements. Applications will be reviewed by the local HUD Field Office to determine whether or not they are technically adequate based on the NOFA requirements. Categories of applications that will not be funded are stated in section VII(C) of this NOFA.

Upon completion of its review, each local HUD field office will prepare a listing of all technically adequate letters and certifications, which includes the total number of Section 8 rental certificates/rental vouchers administered by the HA, FSS program size reflected in the HA's HUD-approved Section 8 FSS Action Plan, and the amount of funding approved for each applicant. This listing will be forwarded to the Grants Management Center, 501 School Street, SW, Suite 800, Washington, DC 20024, which will then allocate the available funding among approvable applications. Approvable applications identified by each HUD field office will be grouped into two categories: *Category 1*—Applications from HAs that received Section 8 FSS program coordinator funding in FY '98. *Category 2*—Applications from HAs, including state and regional HAs, that did not receive Section 8 FSS program coordinator funding in FY '98).

All technically adequate applications will be funded to the extent funds are available. If HUD receives applications for funding greater than the amount made available under this NOFA, HUD will first fund all eligible Category 1 applications. If funding remains, HUD will then fund eligible applicants in Category 2 in size order starting from the smallest HAs first (i.e., those HAs with the smallest combined rental voucher and certificate programs first). If there are not sufficient monies to fund all Category 2 applications from HAs with the same combined Section 8 rental certificate voucher program size, funding will be provided based on the size of the HA's Section 8 FSS program, reflected in the HA's HUD-approved Section 8 FSS Action Plan, starting with the largest approved Section 8 FSS program.

VI. Application Submission Requirements

(A) Application Requirement for HAs That Received FY 98 FSS Program Coordinator Funding

(1) *Applications for Funding at 103 percent of FY 98 Funding.* Each HA that received funding for a Section 8 FSS program coordinator under the FY 98 NOFA that wishes to receive funding under this NOFA at 103 percent of the FY 98 funding subject to the $46,350 maximum, must complete a certification in the format shown as ''Attachment A'' of this NOFA and submit it to the appropriate local HUD field office by the due date. The completed Attachment A certification along with the Fair Housing Certification (Attachment C of this NOFA) and the Certification Regarding Lobbying (Attachment D of this NOFA) constitute the entire HA application for funding under this section.

(2) *Application for Funding Other than 103 Percent of their FY 98 Funding Amount.* Any HA that received Section 8 FSS Program Coordinator funding in FY 98 that wishes to receive funding for FY 99 at an amount either higher or lower than 103 percent of the FY 98 funding (subject to the $46,350 maximum) must submit the completed Attachment A certification, the Attachment C Fair Housing Certification, the Attachment D Certification Regarding Lobbying, and the Attachment B letter required under VI. (B) of this NOFA.

(B) Request for FSS Program Coordinator Funds by Eligible HAs That Were Not Funded in FY 98

The applications of all HAs that did not receive funding under the FY 98 NOFA must contain the following information stated in a letter from the Executive Director of the HA to the HUB, Director of Public Housing, or the Program Center Coordinator in the local HUD field office (see sample letter format, Attachment B). That letter plus the Fair Housing and Equal Opportunity Certification which is Attachment C of this NOFA and the Certification Regarding Lobbying which is Attachment D of this NOFA constitute the entire HA application for funding

under this section. The HA ''Attachment B'' letter must state:

(1) The total number of budgeted Section 8 rental certificates and rental vouchers from the most recent HUD-approved form HUD–52672, Supporting Data for Annual Contributions Estimates Section 8 Housing Assistance Payments Program.

(2) The total number of families currently enrolled in the HA's Section 8 FSS program.

(3) The total number of voluntary and mandatory Section 8 FSS slots reflected in the HUD-approved FSS Action Plan of the HA; *OR,* where HAs are applying jointly, the combined total HUD-approved Section 8 FSS program slots.

(4) The annual salary proposed for the Section 8 FSS program coordinator, plus any fringe benefits. Do not include costs of training, transportation, clerical support, equipment, supplies, or other administrative costs or overhead. The program coordinator salary should be set as follows:

(a) Determine the salary level, taking into consideration salaries for comparable jobs, modified by the hours worked.

(b) Set the annual salary, including any fringe benefits that pertain to the job.

(5) Evidence that demonstrates salary comparability with similar positions in the local jurisdiction.

(6) Joint applicants must indicate which HA will be the lead applicant and will receive and administer the FSS program coordinator funding.

(C) Fair Housing Certification and Certification Regarding Lobbying

All HAs applying for funding under this NOFA must submit the Certification Regarding Fair Housing and Equal Opportunity which is included as Attachment C of this NOFA and the Certification Regarding Lobbying which is Attachment D of this NOFA.

VII. Corrections to Deficient Applications

(A) Acceptable Applications

To be eligible for processing, an application must be received by the appropriate local HUD field office no later than the date and time specified in this NOFA. The local HUD field office will initially screen all applications and notify HAs of technical deficiencies by letter.

(B) Correction of Deficient Applications

After the application due date, HUD may not, consistent with 24 CFR part 4, subpart B, consider unsolicited information from an applicant. HUD may contact an applicant, however, to clarify an item in the application or to correct technical deficiencies. Applicants should note, however, that HUD may not seek clarification of items or responses that improve the substantive quality of the applicant's response to any eligibility or selection criterion. Examples of curable technical deficiencies include failure to submit the proper certifications or failure to submit an application containing an original signature by an authorized official. In each case, HUD will notify the applicant in writing by describing the clarification or technical deficiency. HUD will notify applicants by facsimile or by return receipt requested. Applicants must submit clarifications or corrections of technical deficiencies in accordance with the information provided by HUD within 14 calendar days of the date of receipt of the HUD notification. If the deficiency is not corrected within this time period, HUD will reject the application as incomplete.

(C) Unacceptable Applications

(1) After the 14-calendar day technical deficiency correction period, the local HUD field office will disapprove HA applications that it determines are not acceptable for processing. The HUD notification of rejection letter must state the basis for the decision.

(2) Applications from HAs that fall into any of the following categories are ineligible for funding under this NOFA and will not be processed:

(a) An HA application submitted after the deadline date for this NOFA.

(b) An application from an HA that is not an eligible HA under III.(B) of this NOFA or an application that does not comply with the requirements of VI.(A) or VI.(B) of this NOFA.

(c) An application from an HA that does not meet the requirements of IV.D.(1) of this NOFA, Compliance with Fair Housing and Civil Rights Laws.

(d) An application from an HA that has serious unaddressed, outstanding Inspector General audit findings, or HUD Office management review findings for one or more of the following programs: Rental Voucher, Rental Certificate or Moderate Rehabilitation .

VIII. Findings and Certifications

(A) Paperwork Reduction Act

The Section 8 information collection requirements contained in this notice were submitted to the Office of Management and Budget for review under the provisions of the Paperwork Reduction Act of 1995 (44 U.S.C. 3501–3520) and have been assigned OMB control number 2577–0198. An agency may not conduct or sponsor, and a person is not required to respond to, a collection of information unless the collection displays a valid control number.

(B) Environmental Requirements

In accordance with provisions of 24 CFR Part 50.19(c)(5)(ii), a finding of no significant impact is not required under this Notice. This NOFA provides funding under 24 CFR Part 984, which does not contain environmental review provisions because it concerns activities that are listed in 24 CFR 50.19(b) as categorically excluded from environmental review under the National Environmental Policy Act of 1969 (42 CFR 4321) (''NEPA''). Accordingly, under 24 CFR 50.19(c)(5), this NOFA is categorically excluded from environmental review under NEPA. No environmental review is required in connection with the award of assistance under this NOFA, because the NOFA only provides funds for employing a coordinator that provides public and supportive services, which are categorically excluded under 24 CFR 50.19(b)(4) and (12).

(C) Catalog of Federal Domestic Assistance Numbers

The Catalog of Federal Domestic Assistance number for the Section 8 rental certificate program is 14.855. The number for the Section 8 rental voucher program is 14.857.

(D) Executive Order 12612, Federalism

The General Counsel, as the Designated Official under section 6(a) of Executive Order 12612, Federalism, has determined that the provisions of this NOFA do not have ''federalism implications'' within the meaning of the Order. The NOFA makes funds available for HAs to employ or otherwise retain the services of up to one FSS program coordinator for one year. As such, there are no direct implications on the relationship between the national government and the states or on the distribution of power and responsibilities among various levels of government.

(E) Accountability in the Provision of HUD Assistance

Section 102 of the Department of Housing and Urban Development Reform Act of 1989 (HUD Reform Act) and the final rule codified at 24 CFR part 4, subpart A, published on April 1, 1996 (61 FR 1448), contain a number of provisions that are designed to ensure greater accountability and integrity in the provision of certain types of

assistance administered by HUD. On January 14, 1992, HUD published, at 57 FR 1942, a notice that also provides information on the implementation of section 102. The documentation, public access, and disclosure requirements of section 102 are applicable to assistance awarded under this NOFA as follows:

Documentation and public access requirements. HUD will ensure that documentation and other information regarding each application submitted pursuant to this NOFA are sufficient to indicate that basis upon which assistance was provided or denied. This material, including any letters of support, will be made available for public inspection for a five-year period beginning not less than 30 days after the award of the assistance. Material will be made available in accordance with the Freedom of Information Act (5 U.S.C. 552) and HUD's implementing regulations at 24 CFR part 15. In addition, HUD will include the recipients of assistance pursuant to this NOFA in its **Federal Register** notice of all recipients of HUD assistance awarded on a competitive basis.

Disclosures. HUD will make available to the public for five years all applicant disclosure reports (HUD Form 2880) submitted in connection with this NOFA. Update reports (also Form 2880) will be made available along with the applicant disclosure reports, but in no case for a period of less than three years. All reports—both applicant disclosures and updates—will be made available in accordance with the Freedom of Information Act (5 U.S.C. 552) and HUD's implementing regulations at 24 CFR part 15.

(F) Section 103 HUD Reform Act

HUD will comply with section 103 of the Department of Housing and Urban Development Reform Act of 1989 and HUD's implementing regulations in subpart B of 24 CFR part 4 with regard to the funding competition announced today. These requirements continue to apply until the announcement of the selection of successful applicants. HUD employees involved in the review of applications and in the making of funding decisions are limited by section 103 from providing advance information to any person (other than an authorized employee of HUD) concerning funding decisions, or from otherwise giving any applicant an unfair competitive advantage. Persons who apply for assistance in this competition should confine their inquiries to the subject areas permitted under section 103 and subpart B of 24 CFR part 4.

Applicants or employees who have ethics related questions should contact the HUD Office of Ethics (202) 708–3815. (This is not a toll-free number.) For HUD employees who have specific program questions, such as whether particular subject matter can be discussed with persons outside HUD, the employee should contact the appropriate Field Office Counsel.

(G) Prohibition Against Lobbying Activities

Applicants for funding under this NOFA are subject to the provisions of section 319 of the Department of Interior and Related Agencies Appropriation Act for Fiscal Year 1991 (31 U.S.C. 1352) (the Byrd Amendment) and to the provisions of the Lobbying Disclosure Act of 1995 (Pub. L. 104–65; approved December 19, 1995).

The Byrd Amendment, which is implemented in regulations at 24 CFR part 87, prohibits applicants for Federal contracts and grants from using appropriated funds to attempt to influence Federal executive or legislative officers or employees in connection with obtaining such assistance, or with its extension, continuation, renewal, amendment, or modification. The Byrd Amendment applies to the funds that are the subject of this NOFA. Therefore, applicants must file a certification stating that they have not made and will not make any prohibited payments and, if any payments or agreement to make payments of nonappropriated funds for these purposes have been made, a form SF–LLL disclosing such payments must be submitted. The certification and the SF–LLL are included as Attachment D of this NOFA.

The Lobbying Disclosure Act of 1995 (Pub. L. 104–65; approved December 19, 1995), which repealed section 112 of the HUD Reform Act, requires all persons and entities who lobby covered executive or legislative branch officials to register with the Secretary of the Senate and the Clerk of the House of Representatives and file reports concerning their lobbying activities.

IX. Authority

The Departments of Veterans Affairs and Housing and Urban Development and Independent Agencies Appropriations Act, 1999 (Pub. L. 105–265, approved October 21, 1998) allows funding for program coordinators under the Section 8 FSS program. As a result, the Department determined to make a sufficient amount available under this NOFA, under Part 984, in accordance with section 984.302(b), to enable HAs to hire up to one Section 8 FSS program coordinator for one year at a reasonable cost as determined by the HA and HUD, based on salaries for similar positions in the locality.

Dated: March 3, 1999.

Harold Lucas,

Assistant Secretary for Public and Indian Housing.

Attachment A—Required Certification Format for HAs That Received FY 98 Section 8 FSS Program Coordinator Funding *

Dear HUD Field Office HUB Director of Public Housing or Field Office Program Center Coordinator:

In connection with the FY 99 NOFA for Section 8 FSS program coordinators, I hereby certify for the _____ (enter name) HA that:

(1) The HA has hired a Section 8 FSS program coordinator using HUD funds provided for that purpose on _____ (enter the ACC effective date of FY 98 FSS program coordinator funding increment), and

(2) The HA has (check all that apply):

_____ (a) Formed and convened an FSS program coordinating committee,

_____ (b) Obtained HUD approval of its Section 8 FSS action plan,

_____ (c) Executed contracts of participation with FSS participants.

(3) The HA has _____ (enter number) Section 8 families currently enrolled in its Section 8 FSS program.

Sincerely,

Executive Director.

Attachment B—New Requests for Section 8 FSS Program Coordinator Funds Sample Letter Format

Dear HUD Field Office HUB Director of Public Housing or Field Office Program Center Coordinator:

This is to request funds to pay the salary of a Section 8 Family Self-Sufficiency (FSS) program coordinator for one year, for the _____ housing agency (HA) Section 8 FSS program.

1. Total number of budgeted Section 8 rental certificates and rental vouchers from the most recent HUD-approved form HUD–52672, Supporting Data for Annual Contributions Estimates Section 8 Housing Assistance Payments Program: _____.

2. Total number of families currently enrolled in the HA's Section 8 FSS program: _____.

3. Total number of Section 8 FSS program slots based on the number of (both voluntary and mandatory) FSS slots identified in the HA's HUD-approved Action Plan OR, when HAs are applying jointly, the combined total of Section 8 FSS program slots in the HUD-approved Action Plans of the HAs _____.

4. Section 8 FSS Program Coordinator Salary:

_____

* **Note:** To qualify for funding under this NOFA, HAs that received Section 8 FSS Program Coordinator funding in FY 98 must have hired an FSS program coordinator with funding awarded under that NOFA and demonstrate activities in each of the categories in section 2.(a), 2.(b) and 2.(c) of this Attachment A certification.

a. *Salary level,* based on salaries for comparable jobs (modified by number of hours worked) _____.

b. *Annual Salary* plus Fringe Benefits: _____ Hours/Week; _____ $/Hour; _____ Fringe Rate(%)
Annual Salary _____. _____

5. Attachment: Evidence demonstrating salary comparability to similar positions in the local jurisdiction.

6. For joint applications: The lead applicant HA that will receive and administer the Section 8 FSS program coordinator funding is:_____.

If there are any questions, please contact _____ at _____.

Sincerely,

Executive Director.

Attachment C—Fair Housing and Equal Opportunity Certifications

The housing agency (HA) certifies that in administering the funding for the Section 8 Family Self-Sufficiency program coordinators it will comply with the requirements of the Fair Housing Act, Title VI of the Civil Rights Act of 1964, section 504 of the Rehabilitation Act of 1973, and the Age Discrimination Act of 1975, and will affirmatively further fair housing. CDBG recipients also must certify to compliance with section 109 of the Housing and Community Development Act.

Name of HA

_____

Signature and Title of HA Representative

_____

Date

_____

Attachment D—Certification Regarding Lobbying

The undersigned certifies, to the best of his or her knowledge and belief, that:

(1) No Federal appropriated funds have been paid or will be paid, by or on behalf of the undersigned, to any person for influencing or attempting to influence an officer or employee of any agency, a Member of Congress, an officer or employee of Congress, or an employee of a Member of Congress in connection with the awarding of any Federal contract, the making of any Federal grant, the making of any Federal loan, the entering into of any cooperative agreement, and the extension, continuation, renewal, amendment, or modification of any Federal contract, grant, loan, or cooperative agreement.

(2) If any funds other than Federal appropriated funds have been paid or will be paid to any person for influencing or attempting to influence an officer or employee of any agency, a Member of Congress, an officer or employee of Congress, or an employee of a Member of Congress in connection with this Federal contract, grant, loan, or cooperative agreement, the undersigned shall complete and submit Standard Form-LLL, ''Disclosure Form to Report Lobbying,'' in accordance with its instructions.

(3) The undersigned shall require that the language of this certification be included in the award documents for all subawards at all tiers (including subcontracts, subgrants, and contracts under grants, loans and cooperative agreements) and that all subrecipients shall certify and disclose accordingly.

This certification is a material representation of fact upon which reliance was placed when this transaction was made or entered into. Submission of this certification is a prerequisite for making or entering into this transaction imposed by section 1342, title 31, U.S. Code. Any person who fails to file the required certification shall be subject to a civil penalty of not less than $10,000 and not more than $100,000 for each such failure.

_____

Signature of HA Representative

_____

Name of HA

_____

Name of Signatory (Print or Type)

_____

Date signed

_____

[FR Doc. 99–5574 Filed 3–5–99; 8:45 am]

BILLING CODE 4210–33–P

federal register

Monday
March 8, 1999

Part IX

Department of Housing and Urban Development

Welfare-to-Work Section 8 Tenant-Based Assistance Program Set-Aside Sites for Fiscal Year 1999 Funding Availability; Notice

DEPARTMENT OF HOUSING AND URBAN DEVELOPMENT

[Docket No. FR–4484–N–01]

Notice of Funding Availability for the Welfare-to-Work Section 8 Tenant-Based Assistance Program Set-Aside Sites for Fiscal Year 1999

AGENCY: Office of Public and Indian Housing, HUD.

ACTION: Notice of Funding Availability (NOFA).

SUMMARY: *Purpose of Program.* To provide Section 8 Welfare-to-Work rental voucher program funding, as provided by the VA/HUD and Independent Agencies Appropriations Act, 1999, (99 App. Act), for local self-sufficiency/welfare-to-work initiatives in San Bernardino County, California; Cleveland, Ohio; Kansas City, Missouri; Charlotte, North Carolina; Miami/Dade County, Florida; Prince Georges County, Maryland; New York City, New York; and Anchorage, Alaska.

Available Funds. At least $4 million to each of the eight sites identified above.

Eligible Applicants. Housing agencies (HAs) currently administering Section 8 rental certificate and voucher programs in any of the eight locations identified above in this NOFA and in the 99 App. Act.

Application Deadline. The application deadline for Section 8 Welfare-to-Work Rental Vouchers under this NOFA is May 7, 1999, at the time described in section I. of this NOFA, below.

Match. None

SUPPLEMENTARY INFORMATION: If you are interested in applying for funding under this NOFA, please review carefully the following information:

I. Application Due Date, Application Kits and Technical Assistance

Application Due Date: May 7, 1999.

Address for Submitting Applications: The application and two copies must be submitted to your local HUD Field office HUB (Attention: HUB, Director of Public Housing) or local HUD Field Office Program Center (Attention: Program Center Coordinator). Throughout this NOFA, the Field Office HUBs and Program Centers will be referred to as the local HUD Field offices. Applicants should not submit the original or any copies of their applications to HUD Headquarters.

(1) *Mailed Applications (Other than Overnight or Express Mail Delivery).* Your application will be considered timely filed if postmarked before midnight, local time, on the application due date and received by the appropriate local HUD Field Office on or within ten (10) days of the application due date.

(2) *Applications Sent by Overnight/Express Mail Delivery.* Applications sent by overnight delivery or express mail will be considered timely filed if received by the appropriate local HUD Field Office before or on the application due date, or upon submission of documentary evidence that they were placed in transit with the overnight delivery service by no later than the specified application due date.

(3) *Hand Carried Applications.* Applications must be delivered to the appropriate local HUD Field Office by 6:00 pm local time on the due date. Hand carried applications will be accepted during normal business hours before the application due date. On the application due date, business hours will be extended to 6:00 pm.

For Application Kits, Further Information and Technical Assistance: When preparing applications under this NOFA, applicants must follow the instructions for completing and organizing their applications that are found in the application kit that has been developed for the Section 8 Welfare-to-Work Rental Voucher Program under the NOFA for the national competition for Section 8 Welfare-to-Work rental vouchers which was published in the **Federal Register** on January 28, 1999 (64 FR 4495). For an application kit and any supplemental information, please call the Public and Indian Housing Information and Resource Center at 1–800–955–2232. An application kit will also be available on the Internet through the HUD web site at http://www.hud.gov. When requesting an application kit, please refer to the Section 8 Welfare-to-Work Rental Voucher Program, and provide your name, address (including zip code) and telephone number (including area code).

For answers to your questions, you may also contact the Public and Indian Housing Information and Resource Center at 1–800–955–2232, or contact the Director of Public Housing, the Program Center Coordinator in your local HUD Office. Hearing-or speech-impaired individuals may call 1–800–877–8339 (the Federal Information Relay Service TTY). (Other than the ''800'' number, these numbers are not toll-free.) Information can also be accessed via the Internet through the HUD web site at http://www.hud.gov.

The HUD web site will also provide a text link to HUD's Welfare-to-Work home page, and the Welfare-to-Work related websites of the Departments of Health and Human Services, Labor, and Transportation, to assist you in coordinating your proposed program with the efforts sponsored by these Departments.

Prior to the application deadline, staff at the numbers given above will be available to provide general guidance, but not guidance in actually preparing the application.

II. Amount Allocated

Of the $283 million appropriated in Fiscal Year (FY) 1999 to fund Section 8 Welfare-to-Work Rental Vouchers, at least $4 million each shall be made available under this NOFA for local self-sufficiency/welfare-to-work initiatives in San Bernardino County, California; Cleveland, Ohio; Kansas City, Missouri; Charlotte, North Carolina; Miami/Dade County, Florida; Prince Georges County, Maryland; New York City, New York; and Anchorage, Alaska as provided by the VA/HUD and Independent Agencies Appropriations Act, 1999.

III. Program Description; Eligible Applicants; Eligible Activities

(A) *Program Description.* The Section 8 Welfare-to-Work Rental Voucher program provides tenant-based Section 8 rental assistance to help eligible families make the transition from welfare to work. Tenant-based Section 8 rental assistance is to be provided in connection with programs where the HA has demonstrated that tenant-based rental assistance is critical to the success of eligible families to obtain or retain employment. No additional funding is provided under this NOFA for welfare-to-work services for families. Funding is only for Section 8 Welfare-to-Work rental voucher housing assistance and regular Section 8 administrative fees for administration of such housing assistance. If appropriate, HAs may project base a portion of the funding following the applicable Section 8 Project-Based Certificate (PBC) program regulations (24 CFR part 983). The Section 8 Welfare-to-Work Rental Voucher program must take into account the particular circumstances of the local community. The rental assistance provided to families through the Section 8 Welfare-to-Work Rental Voucher program must be coordinated with other welfare reform and welfare-to-work initiatives.

Under this NOFA, at least $4 million will be available to fund Section 8 Welfare-to-Work Rental Vouchers in each of the eight set-aside sites identified in section II. of this NOFA, above, and in the 99 App. Act. If more than one eligible HA that administers a tenant-based Section 8 program at a set-

aside site applies, the number of rental vouchers each HA receives under this NOFA will be based on the percentage of the tenant-based Section 8 program each HA administers in the set-aside location.

If you are an HA at a set-aside site that would receive fewer rental vouchers under this set-aside competition than would be available to you under the national competition for the Section 8 Welfare-to-Work rental vouchers and you wish to apply for the maximum number of vouchers you could receive under the formula for the national competition, you must also apply under the January 28, 1999 NOFA for the national competition. The number of rental vouchers that you receive under this set-aside NOFA plus any vouchers funded through the national competition for Section 8 Welfare-to-Work rental vouchers may not exceed the maximum that would be available to you in the national competition.

An HA seeking welfare-to-work rental vouchers under this NOFA may use some of its current pool of other Section 8 voucher funding to augment the welfare-to-work vouchers in order to enlarge the pool of vouchers available to those families qualifying for its approved welfare-to-work program.

(B) *Eligible Applicants.* HAs administering Section 8 rental certificates or rental vouchers at any of the eight set-aside sites identified in section II. of this NOFA, above, may apply. Each applicant HA must develop a program in consultation with the State or local entity administering the Temporary Assistance to Needy Families (TANF) program and the entity, if any, administering the Welfare-to-Work formula and/or competitive grants allocated by the United States Department of Labor.

(C) *Eligible Activities.* You may only use funds available under this NOFA to administer a Section 8 Welfare-to Work rental voucher program in a set-aside site identified in section II of this NOFA, above. In the Section 8 Welfare-to-Work Rental Voucher Program, you will perform all normal rental voucher program activities, but you may only provide rental assistance to families that meet all normal Section 8 program requirements and also meet the specific requirements of the Welfare-to-Work Rental Voucher Program and of this NOFA. The specific requirements of the Section 8 Welfare-to-Work program are stated in section IV.(A) of this NOFA, below.

IV. Program Requirements

(A) *Eligibility of Families.* (1) *Section 8 Welfare-to-Work Rental Voucher eligible families.* The term ''Section 8 Welfare-to-Work rental voucher program eligible family'' means a family that, in addition to meeting the eligibility requirements of the normal tenant-based Section 8 assistance program, also meets the following additional requirements:

(a) When initially selected for welfare-to-work rental voucher assistance, families must be eligible to receive, be currently receiving, or shall have received> within the preceding two years, assistance or services funded under the TANF program;

(b) Tenant-based housing assistance must be determined to be critical to the family's ability to successfully obtain or retain employment; and

(c) The family shall not already be receiving tenant-based assistance under Section 8 of the United States Housing Act of 1937 (1937 Act—42 U.S.C. 1473f).

(2) To be eligible for selection for the Section 8 Welfare-to-Work Rental Voucher Program, families must be on the waiting list used by the HA for its tenant-based Section 8 program.

(B) *HA Responsibilities.* If your application is funded: (1) You must modify your selection system to require the selection of Section 8 Welfare-to-Work Rental Voucher program eligible families for the program;

(2) Families on your Section 8 waiting list must be selected in accordance with the established selection policies in your HA's administrative plan;

(3) If you have a closed Section 8 waiting list and do not have a sufficient number of welfare-to-work eligible families on your waiting list, you must reopen the waiting list to accept an application from any Section 8 Welfare-to-Work eligible applicant family that is not currently on your waiting list for your tenant-based Section 8 program;

(4) You must administer the rental assistance in accordance with applicable voucher program regulations and requirements and your Section 8 administrative plan;

(5) During the term of this welfare-to-work funding, if Section 8 rental assistance for a family under this program is terminated, available welfare-to-work rental assistance must be provided to another Section 8 Welfare-to-Work eligible family selected from your tenant-based Section 8 program waiting list. The term of welfare-to-work funding is the term of the welfare-to-work ACC funding increment.

(6) *Welfare-to-Work Evaluation Participation.* HUD is seeking 5 to 9 HAs to participate, on a voluntary basis, in the evaluation that HUD intends to conduct on the Section 8 Welfare-to-Work Rental Voucher Program. HAs who volunteer to participate as a special evaluation site for purposes of this evaluation, if they are selected for an award under this NOFA, will be compensated for any additional administrative burden from the $2.83 million evaluation provided in the 99 App. Act. In order to participate as a special evaluation site, you and your partners must:

(a) Be awarded at least 450 units under this NOFA.

(b) Fully cooperate with random assignment of your welfare-to-work applicants to treatment and control groups. You will be required to follow an established protocol for determining that some eligible families receive and some eligible families do not receive welfare-to-work vouchers on a random basis.

(c) Assist in data collection and retrieval for the evaluation through administration of special forms and extraction of data from management systems.

(d) Submit a budget with reasonable and necessary costs once HUD specifies the required activities for the evaluation.

(C) *TANF and Welfare-to-Work Support.* Your application must include certifications from the State or local entity administering assistance under the TANF program and from the entity, if any, administering the Welfare-to-Work formula and/or competitive grants allocated by the United States Department of Labor that these entities support your proposed Section 8 Welfare-to-Work program and will cooperate with you, as the administrator of the housing assistance, to assure that the rental assistance is coordinated with other welfare reform and welfare-to-work initiatives. If any of these entities does not respond to your request for this certification within a reasonable time period, its concurrence shall be assumed but you will be required to submit a copy of your request for this certification with your application. If any of these entities objects to the application, their concerns must accompany the application when it is submitted to HUD so that HUD can take the concerns into account in its funding decision.

(D) *Waiver requests.* Your proposed Section 8 Welfare-to-Work program must be workable without any waivers, and will be rated and ranked without the waiver of any requirements. Statutory waivers will not be granted. However, your application may include requests for waivers of any regulatory, handbook or directive requirements along with an explanation of how the

waivers would improve your program. If you are selected for an award, HUD will consider whether or not to grant your waiver request. Among other considerations, waivers will not be granted if they have an adverse impact on fair housing and civil rights.

(E) *Program Compliance and Designation of Subcontractor.* Immediately after the publication of this NOFA, the local HUD field office will notify, in writing, those HAs that are not eligible to apply without a subcontractor acceptable to HUD or a proposal for management improvements acceptable to HUD, as explained in this section.

(1) *Program compliance.* Your application must designate a subcontractor acceptable to HUD to administer the new funding increment on your behalf, in accordance with paragraph (2) of this section, if you have:

(a) Material weaknesses or reportable conditions outstanding from Inspector General audit findings, or HUD management review findings for one or more of your Section 8 rental voucher, rental certificate or moderate rehabilitation programs;

(b) Serious underutilization evidenced by fewer than 85 percent of budgeted rental certificates or vouchers under lease; or

(c) Significant findings in program compliance reviews.

(2) *Designation of Subcontractor.* If you have any of the compliance problems listed in paragraph (1) of this section, you must designate a subcontractor acceptable to HUD to administer the new funding increment under this NOFA on your behalf. In such instances, your application must include:

(a) An agreement by the subcontractor to administer the new funding increment; and

(b) A statement that outlines the steps you are taking to resolve the compliance problems, which may be a proposal for management improvements that you will implement to remedy the problems.

(F) *Statutory Requirements.* To be eligible for funding under this NOFA, you, the applicant, must meet all applicable statutory and regulatory requirements. If you need copies of regulations, they are available at the HUD web site located at http://www.HUD.gov.

(G) *Threshold Requirements—Compliance with Fair Housing and Civil Rights Laws.* All applicants must comply with all fair housing and civil rights laws, statutes, regulations, and executive orders as enumerated in 24 CFR 5.105(a). If an applicant: (a) has been charged with a systemic violation of the Fair Housing Act by the Secretary alleging ongoing discrimination; (b) is the defendant in a Fair Housing Act lawsuit filed by the Department of Justice alleging an ongoing pattern or practice of discrimination; or (c) has received a letter of noncompliance findings under Title VI of the Civil Rights Act of 1964, section 504 of the Rehabilitation Act of 1973, or section 109 of the Housing and Community Development Act of 1974, the applicant's application will not be evaluated under this NOFA if, prior to the application deadline, the charge, lawsuit, or letter of findings has not been resolved to the satisfaction of the Department. HUD's decision regarding whether a charge, lawsuit, or a letter of findings has been satisfactorily resolved will be based upon whether appropriate actions have been taken necessary to address allegations of ongoing discrimination in the policies or practices involved in the charge, lawsuit, or letter of findings.

(H) *Additional Nondiscrimination Requirements.* You, the applicant, must comply with the Americans with Disabilities Act, and Title IX of the Education Amendments Act of 1972.

(I) *Affirmatively Furthering Fair Housing.* If you are a successful applicant, you will have a duty to affirmatively further fair housing. You, the applicant, should include in your application or work plan the specific steps that you will take to:

(1) Address the elimination of impediments to fair housing that were identified in the jurisdiction's Analysis of Impediments (AI) to Fair Housing Choice;

(2) Remedy discrimination in housing; or

(3) Promote fair housing rights and fair housing choice.

Further, you, the applicant, have a duty to carry out the specific activities provided in your responses to the NOFA rating factors that address affirmatively furthering fair housing.

(J) *Forms, Certifications and Assurances.* You, the applicant, are required to submit signed copies of the Funding Application, form HUD–52515, which includes all the necessary certifications for Fair Housing, Drug-Free Workplace and Lobbying Activities and the certification required by 24 CFR 24.510. (The provisions of 24 CFR part 24 apply to the employment, engagement of services, awarding of contracts, subgrants, or funding of any recipients, or contractors or subcontractors, during any period of debarment, suspension, or placement in ineligibility status, and a certification is required.)

(K) *Environmental Requirements.* In accordance with 24 CFR 50.19(b)(11) of the HUD regulations, tenant-based activities assisted under this program are categorically excluded from the requirements of the National Environmental Policy Act and are not subject to environmental review under the related laws and authorities. In accordance with 24 CFR 983.11(b), you must have a responsible entity complete an environmental review and obtain a HUD release of funds before entering into any agreement to provide project-based assistance.

(L) *Notice of Repeal of Local Government Comment Requirements.* Local government comments that HUD was previously required to obtain from the unit of general local government on HA applications for Section 8 rental assistance under Section 213(c) of the Housing and Community Development Act of 1974 are no longer required. Section 551 of the Quality Housing and Work Responsibility Act of 1998 (Pub.L. 105–276, 112 Stat. 2461, approved October 21, 1998) (QHWRA) repealed the provisions of Section 213(c) of the Housing and Community Development Act of 1974. Although section 503 of QHWRA establishes an effective date of October 1, 1999, for its provisions unless otherwise specifically provided, section 503 also permits any QHWRA provision or amendment to be implemented by notice, unless otherwise specifically provided. Accordingly, HUD's Notice of Initial Guidance on the QHWRA, published on February 18, 1999 (64 FR 8192), provided the notice of immediate implementation of section 551 of QHWRA, as permitted by section 503 of QHWRA.

V. Application Selection Process

(A) *Overview of Process.* Local HUD field offices will initially review applications to ensure that they are complete. When applications are complete, they will be forwarded to the Grants Management Center where they will be reviewed based on the criteria listed below in section V.(C). Although HUD expects to fund applications from all eligible HAs currently administering Section 8 rental certificate and rental voucher programs in any of the eight set-aside locations, an HA will not receive funding until its application receives a rating of at least 55 points. Scoring of applications using the five factors in section V.(C) of this NOFA will give HUD a method of ensuring that the HA has developed a workable plan for administering its Section 8 Welfare-to-Work Rental Voucher program.

(B) *Threshold Requirements.* (1) The application is complete and contains all required certifications, including those described in section IV.(J), above, of this NOFA.

(2) You meet the requirements of section IV.(G) of this NOFA, *Compliance With Fair Housing and Civil Rights Laws.*

(3) The application designates a subcontractor in accordance with section IV.(E), above, of this NOFA, if necessary under that section.

(C) *Rating Factors.* (1) F*actor 1:* Need for Welfare-to-Work Voucher Program (20 points)

(a) *Description:* This factor examines the extent to which you identify the community need that your proposed activities will target and the urgency of meeting this need. You must provide evidence of the housing need of the eligible population that will be served by this program and demonstrate that tenant-based assistance is essential to assist these families obtain/retain employment. If the HA plans to project-base any of the Welfare-to-Work rental voucher funding, the HA must explain how this would benefit the HA's Welfare-to-Work rental voucher program. Applicants with jurisdiction outside of metropolitan areas must address the needs of rural areas.

(b) *Submission Requirements for Factor 1:* You must submit a narrative that documents that tenant-based rental assistance for which you are applying is necessary to assist Welfare-to-Work eligible families to obtain/retain employment. If you plan to project-base a portion of the Welfare-to-Work rental voucher funding, the need to develop project-based units must be explained and how this would best meet the needs of welfare-to-work eligible families, and you must provide an estimate of the time to occupancy.

(2) *Factor 2:* Soundness of Approach (20 Points).

(a) *Description:* This factor examines the quality of your Welfare-to-Work voucher program. You must describe in narrative form the proposed program developed in coordination with the TANF program and other welfare-to-work programs and how the proposed program design encourages and aids Welfare-to-Work eligible families to move from welfare to work. In evaluating this factor, HUD will consider the extent to which your application demonstrates that tenant-based assistance is critical to the success of assisting eligible families to obtain or retain employment. HUD will also consider the extent to which your application lays out an effective plan, with a fully developed strategy of outreach to eligible families to ensure that all Welfare-to-Work vouchers are under lease within a year of award, including how your analysis of need in Factor 1 affects your outreach to families and targeting of assistance. You should describe any innovative approaches that will be included in your proposed program. You must address your strategy for tenant counseling, housing search, and landlord outreach, and specify the criteria for selecting among eligible families.

HUD will also consider the extent to which, and how well, your plan of proposed activities is described in detail in your application; addresses the goals and purposes of the Welfare-to-Work voucher program; addresses the need for a Welfare-to-Work program that was identified under Factor 1, above; will be carried out in a timely manner, conducted in a manner that will reach and benefit members of the target group, and will make use of services and materials that are accessible to all persons, including persons with disabilities; and will yield long-term results and innovative strategies or ''best practices'' that can be readily disseminated to other organizations and State and local governments.

(b) *Submission Requirements for Factor 2:*

(i) A detailed narrative describing your proposed Welfare-to-Work voucher program developed in coordination with the TANF program and other welfare-to-work programs; the specific tasks and subtasks to be performed, including innovative approaches and plans for tenant counseling, housing search and landlord outreach.

(ii) A discussion of how your application demonstrates that tenant-based assistance is critical to the success of assisting eligible families to obtain or retain employment.

(iii) A discussion of how your proposed activities address the goals and purposes of the Welfare-to-Work voucher program including how the program design encourages and aids the move to self-sufficiency, and the criteria for selecting among eligible families.

(iv) A discussion of how your application lays out a fully developed and effective plan with outreach to eligible families to ensure that all Welfare-to-Work vouchers are under lease within a year of award. Your discussion must specify how your analysis of need in Factor 1 affects your outreach to families and targeting of assistance, including families in rural areas if your jurisdiction includes rural areas, unless you provide justification for not addressing rural areas.

(v) A description of the immediate benefits of your proposed activities and how the benefits will be measured. You must describe the methods you will use to determine the effectiveness of Welfare-to-Work program activities.

(vi) A Section 8 Leasing Schedule.

(vii) A discussion of how the activities will reach and benefit members of the target group and will make use of services and materials that are accessible to all persons, including persons with disabilities;

(viii) A description of how the proposed activities will yield long-term results and innovative strategies or ''best practices'' that can be readily disseminated to other organizations, communities, and State and local governments.

(3) *Factor 3:* Capacity of Applicant and Relevant Organizational Experience (20 Points)

(a) *Description:* This factor examines the extent to which your organization (including individuals or organizations, such as subcontractors or consultants, if any, that will be your partners in carrying out the proposed activities) have the organizational resources necessary to carry out your proposed activities in a timely manner. In evaluating this factor, HUD will consider the extent to which you demonstrate recent and relevant experience in, and knowledge about, carrying out the same or similar activities as those proposed. The overall quality of your staff, administrative ability, and fiscal management ability will be evaluated by HUD. HUD may also rely on information from performance reports, financial status information, monitoring reports, audit reports and other information available to HUD in making its determination under this factor.

Your overall administrative ability is evidenced by factors such as leasing rates, MTCS reporting, correct administration of housing quality standards, compliance with fair housing and equal opportunity program requirements, assistance computation and rent reasonableness and, if you have a mandatory Family Self-Sufficiency Program, implementation of an FSS program of at least the minimum program size or a smaller program size approved by HUD. Your relevant organization experience would be evidence of a successful implementation of an FSS program, Family Unification program, or other program that involved coordination with other agencies and/or coordination of services for families.

(b) *Submission Requirements for Factor 3:*

(i) Narrative description of past performance in carrying out activities that are the same as, or similar to, the activities proposed for funding, and demonstrate reasonable success in carrying out those activities. You may demonstrate such reasonable success by showing that your previous activities have been carried out as proposed and in a timely manner. You must show that benchmarks in operation were met and performance reports were prepared as required. You must also describe any delays that were encountered, and the actions you took to overcome such delays.

(ii) You must submit the proposed number of staff years necessary to carry out the proposed activities, identifying the employees and partners, such as co-applicants, subgrantees, contractors, consultants, and volunteers, to be allocated to the project; the titles and relevant professional background and experience of each employee and partner proposed to be assigned to the project; and the roles to be performed by each identified employee and partner. If you do not presently have the employees and partners necessary to carry out all of the proposed activities, you must identify the gaps in your current staffing and describe in detail your proposed method for securing the necessary employees and partners to carry out the project in a timely manner.

(iii) You must provide a comprehensive description of the project's management structure. You must also describe how staff and partners relate to the project's administrator or manager, including the lines of authority and accountability for all the proposed activities.

(iv) You must demonstrate ability in handling financial resources with adequate financial control procedures and accounting procedures by providing a comprehensive description of the fiscal management structure for the proposed project, including budgeting, fiscal controls and accounting. HUD will also consider findings identified in your most recent audits; internal consistency in the application of numeric quantities; accuracy of mathematical calculations; and other available information on financial management ability.

(4) *Factor 4:* Leveraging Resources. (20 Points)

(a) *Description:* This factor addresses the commitment of public and private resources that will support your Welfare-to-Work voucher program. HUD will consider the extent to which you can document firm, written commitments of resources from the local TANF agency, and, if applicable, from the entity administering the Department of Labor Welfare-to-Work formula and/or competitive grant; other Federal, State and local sources; and from other entities, such as private industry, and for-profit and not-for-profit organizations to provide services and assistance in the form of cash funding, in-kind contributions, services or personnel. Such commitments may include, but are not limited to: child care, transportation necessary to receive services or maintain employment, remedial education, education for completion of secondary or post-secondary schooling, job training, preparation and counseling; substance abuse treatment and counseling; training in homemaking and parenting skills; training in money management; counseling in homeownership responsibilities and opportunities available for rental and homeownership in the private housing market; and job development and placement.

(b) *Submission Requirements for Factor 4:*

(i) Describe all firm commitments to the Welfare-to-Work voucher program including cash funding, in-kind contributions, services or personnel from other Federal, State, local and private sources.

(ii) Provide evidence of leveraging/partnerships by including in the application, letters of firm commitments, memoranda of understanding, or agreements to participate from those entities identified as partners. To be firmly committed, there must be a written agreement to provide the resources. The written agreement may be contingent upon an application receiving funding under this NOFA. Each letter of commitment, memorandum of understanding, or agreement to participate should include the partner organization's or individual's name, proposed level of commitment and responsibilities as they relate to the proposed activities. The commitment must also be signed by an official legally able to make commitments on behalf of the organization.

(5) *Factor 5:* Comprehensiveness and Coordination (20 Points)

(a) *Description:* This factor addresses the extent to which your proposal reflects a coordinated, comprehensive process of identifying needs and building a system to address needs on an ongoing basis by using available HUD funding and other resources. You must describe the extent to which assistance under your proposed Welfare-to-Work program will be coordinated with welfare reform and with other welfare-to-work initiatives, including the U.S. Department of Transportation's Job Access program. The application must include certifications from the TANF agency and the entity, if any, administering the Welfare-to-Work formula and/or competitive grants of the Department of Labor agency of their cooperation and support of the proposed program or evidence of your request for the certification of those agencies and of their failure to respond within a reasonable time, or, if either agency objects to your proposed Welfare-to-Work program, the objections must be included in your application.

In evaluating this factor, HUD will consider:

(i) The extent to which you demonstrate the support and participation of the TANF agency and the entity, if any, administering the Department of Labor Welfare-to-Work formula and/or competitive grant and the commitment of other public and private organizations in the community.

(ii) The specific steps you will take to share with others information on solutions and outcomes resulting from the Welfare-to-Work voucher program, if funded.

(iii) The specific steps you have taken or will take to become active in the community's Consolidated Plan process; Analysis of Impediments to Fair Housing Choice process; Continuum of Care Homeless Assistance planning process, if homeless persons are to be served by the proposed activities; and to address, through these processes, the needs that are the focus of the Welfare-to-Work voucher program.

(iv) The specific steps you have taken or will take to coordinate, through meetings, information networks, planning processes, or other mechanisms, your activities with other welfare-to-work activities in the community, including the appropriate local transportation entity (i.e., transit properties, metropolitan planning organizations, State departments of transportation).

(b) *Submission Requirements for Factor 5:*

(i) Describe what role families, community leaders and organizations and government and private entities in communities you serve have had in planning the activities described in your application and what role they will have in carrying out such activities.

(ii) Describe how you will share with others information on solutions and outcomes resulting from the Section 8 Welfare-to-Work voucher program, if funded.

(iii) Describe specific steps you have taken or will take to become active in

the community's Consolidated Plan process; or the process for the Analysis of Impediments to Fair Housing Choice; or the community's Continuum of Care Homeless Assistance planning process, if homeless persons are to be served by the proposed welfare-to-work activities; and to address, through these processes, the needs that are the focus of your proposed activities.

(iv) Describe the specific steps you have taken or will take to coordinate, through meetings, information networks, planning processes, or other mechanisms, your activities with other proposed or on-going activities in the community funded by HUD or other Federal, State, local or private sources, including the appropriate local transportation entity (i.e., transit properties, metropolitan planning organizations, State departments of transportation.

VI. Application Submission Requirements

(A) *Form HUD–52515.* Funding Application, form HUD–52515, must be completed and submitted for the Section 8 Welfare-to-Work voucher program. This form includes all the necessary certifications for Fair Housing, Drug-Free Workplace and Lobbying Activities. An application must include the information in Section C, Average Monthly Adjusted Income of form HUD–52515 in order for HUD to calculate the amount of Section 8 budget authority necessary to fund the requested number of voucher units. You may obtain a copy of form HUD–52515 from the local HUD Field Office or may download it from the HUD Home page on the internet's world wide web (http://www.HUD.gov).

(B) *Response to Threshold Requirements.* Your application must respond to the threshold requirements that apply to you in paragraphs V.(B)(1) through (3), above, in this NOFA.

(C) *Narrative response to Factors for Award.* Your application package must include the narrative description and any letters, certifications or other materials required for the each of the ranking and rating factors from Section V.(C) of this NOFA.

(D) *Waiver Requests.* Your application may include requests for waivers of any administrative requirements in HUD regulations or directives (handbooks and notices). Statutory waivers will not be granted. Waiver requests must include an explanation of how the waivers would improve your program. Your proposed program must be workable without any waivers, and waiver requests will not be considered in rating and ranking your application. Your waiver requests will only be considered if you receive an award under this NOFA.

(E) *Program Evaluation Participation.* If you would like to participate in HUD's Welfare-to-Work program evaluation, your application should also include a statement that you are willing to participate as a special evaluation site in accordance with the conditions described in section IV.(B)(6) of this NOFA, above.

VII. Corrections to Deficient Applications

After the application due date, HUD may contact you to clarify an item in your application or to correct deficiencies.

VIII. Findings and Certifications

(A) *Paperwork Reduction Act Statement.* The information collection requirements related to this program have been approved by the Office of Management and Budget (OMB) in accordance with the Paperwork Reduction Act of 1995 (44 U.S.C. 3501–3520), and have been assigned OMB approval number 2577–0169. *An agency may not conduct or sponsor, and a person is not required to respond to, a collection of information unless the collection displays a valid control number.*

(B) *Environmental Impact.* Except to the extent that recipients may project base assistance provided under this NOFA, this NOFA does not direct, provide for assistance or loan and mortgage insurance for, or otherwise govern or regulate, real property acquisition, disposition, leasing (other than tenant-based rental assistance), rehabilitation, alteration, demolition, or new construction, or establish, revise or provide for standards for construction or construction materials, manufactured housing, or occupancy. To the extent that recipients project base assistance provided under this NOFA, that assistance is subject to 24 CFR part 983, including the environmental review provisions set out at 24 CFR 983.11. Accordingly, under 24 CFR 50.19(c)(1) and (5), this NOFA is categorically excluded from environmental review under the National Environmental Policy Act (42 U.S.C. 4321).

(C) *Federalism, Executive Order 12612.* The General Counsel, as the Designated Official under section 6(a) of Executive Order 12612, Federalism, has determined that the policies contained in this NOFA will not have substantial direct effects on States or their political subdivisions, or on the relationship between the Federal Government and the States, or on the distribution of power and responsibilities among the various levels of government. Specifically, the NOFA solicits applicants to help eligible families make the transition from welfare to work, and does not impinge upon the relationships between the Federal government and State and local governments. As a result, the NOFA is not subject to review under the Order.

(D) *Prohibition Against Lobbying Activities.* You, the applicant, are subject to the provisions of section 319 of the Department of Interior and Related Agencies Appropriation Act for Fiscal Year 1991, 31 U.S.C. 1352 (the Byrd Amendment), which prohibits recipients of Federal contracts, grants, or loans from using appropriated funds for lobbying the executive or legislative branches of the Federal Government in connection with a specific contract, grant, or loan. You are required to certify, using the certification found at Appendix A to 24 CFR part 87, that they will not, and have not, used appropriated funds for any prohibited lobbying activities. In addition, you must disclose, using Standard Form LLL, ''Disclosure of Lobbying Activities,'' any funds, other than Federally appropriated funds, that will be or have been used to influence Federal employees, members of Congress, and congressional staff regarding specific grants or contracts.

(E) *Section 102 of the HUD Reform Act; Documentation Requirements.*

Publication of Recipients of HUD Funding. HUD's regulations at 24 CFR 4.7 provide that HUD will publish a notice in the **Federal Register** on at least a quarterly basis to notify the public of all decisions made by the Department to provide:

(1) Assistance subject to section 102(a) of the HUD Reform Act; or

(2) Assistance that is provided through grants or cooperative agreements on a discretionary (non-formula, non-demand) basis, but that is not provided on the basis of a competition.

(F) *Catalog of Federal Domestic Assistance Numbers.* The Federal Domestic Assistance numbers for this program are 14.855 and 14.857.

IX. Authority

The VA/HUD and Independent Agencies Appropriations Act, 1999 appropriated $283 million for the Welfare-to-Work Tenant-Based Assistance Program.

Dated: March 3, 1999.

Harold Lucas,

Assistant Secretary for Public and Indian Housing.

[FR Doc. 99–5575 Filed 3–5–99; 8:45 am]

BILLING CODE 4210–33–P

federal register

Monday
March 8, 1999

Part X

Department of Housing and Urban Development

Rental Assistance for Non-Elderly Persons With Disabilities in Support of Designated Housing Plans (Fiscal Year 1999) Funding Availability; Notice

DEPARTMENT OF HOUSING AND URBAN DEVELOPMENT

[Docket No. FR–4412–N–01]

Notice of Funding Availability Rental Assistance for Non-Elderly Persons with Disabilities in Support of Designated Housing Plans Fiscal Year 1999

AGENCY: Office of the Assistant Secretary for Public and Indian Housing, HUD.

ACTION: Notice of funding availability (NOFA).

SUMMARY: *Purpose of the Program.* The purpose of the rental voucher funding being made available under this NOFA is to enable non-elderly families with disabilities to rent affordable private housing. The rental vouchers will assist public housing agencies (PHAs) in providing sufficient alternative resources to meet the housing needs of those non-elderly disabled families who would have been housed by the PHA if occupancy in a designated public housing project/building (or portion thereof) were not restricted to elderly households, and assist PHAs who wish to continue to designate their buildings as ''mixed elderly and disabled buildings'' but can demonstrate a need for alternative resources for non-elderly disabled families.

Available Funds. Approximately $20 million in one-year budget authority for approximately 4,200 Section 8 rental vouchers.

Eligible Applicants. Public housing agencies (PHAs). Indian Housing Authorities, Indian tribes and their tribally designated housing entities are not eligible.

Application Deadline. June 30, 1999.

Match. None.

Additional Information

If you are interested in applying for funding under this program, please read the balance of this NOFA which will provide you with detailed information regarding the submission of an application, Section 8 program requirements, the application selection process to be used by HUD in selecting applications for funding, and other valuable information relative to a PHA's application submission and participation in the program covered by this NOFA.

Application Due Date and Application Submission

Delivered Applications. The application deadline for delivered applications under this NOFA is June 30, 1999, 6:00 p.m. local HUD Field Office HUB or local HUD Field Office Program Center time, with a copy submitted concurrently to the Office of Public Housing, Special Application Center (SAC).

This application deadline is firm as to date and hour. In the interest of fairness to all competing PHAs, HUD will not consider any application that is received after the application deadline. Applicants should take this practice into account and make early submission of their materials to avoid any risk of loss of eligibility brought about by unanticipated delays or other delivery-related problems. HUD will not accept, at any time during the NOFA competition, application materials sent via facsimile (FAX) transmission.

Mailed Applications. Applications will be considered timely filed if postmarked before midnight on the application due date and received by the local HUD Field Office HUB or local HUD Field Office Program Center within ten (10) days of that date.

Applications Sent By Overnight Delivery. Overnight delivery items will be considered timely filed if received before or on the application due date by the local HUD Field Office HUB or local HUD Field Office Program Center, or upon submission of documentary evidence that they were placed in transit with the overnight delivery service by no later than the specified application due date.

Official Place of Application Receipt. The original and a copy of the application should be submitted to the local HUD Field Office HUB, Attention: Director, Office of Public Housing, or to the local HUD Field Office Program Center, Attention: Program Center Coordinator. The local HUD Field Office is the official place of receipt for all applications in response to this NOFA. For ease of reference, the term ''local HUD Field Office'' will be used throughout this NOFA to mean the local HUD Field Office HUB and local HUD Field Office Program Center.

Two copies of the application must also be submitted concurrently to the Office of Public Housing, Special Applications Center, Room 2401, 77 West Jackson Boulevard, Chicago, IL 60604, (tel. 312–886–9754).

Application Kit, Further Information and Technical Assistance

For Application Kit. An application kit is not available and is not necessary for submitting an application in response to this NOFA.

For Further Information. For answers to your questions, you have two options. You may contact the Local HUD Field Office, or you may contact George C. Hendrickson, Housing Program Specialist, Room 4216, Office of Public and Assisted Housing Delivery, Department of Housing and Urban Development, 451 Seventh Street, SW, Washington, DC 20410; telephone (202) 708–1872, ext. 4064. (This is not a toll-free number.) Persons with hearing or speech impairments may access this number via TTY (text telephone) by calling the Federal Information Relay Service at 1–800–877–8339 (this is a toll-free number).

For Technical Assistance. Prior to the application due date, George C. Hendrickson of HUD's Headquarters staff (at the address and telephone number indicated above) will be available to provide general guidance and technical assistance about this NOFA. Current law does not permit HUD staff to assist in preparing the application. Following selection, but prior to award, HUD staff will be available to assist in clarifying or confirming information that is a prerequisite to the offer of an award by HUD.

I. Authority, Purpose, Amount Allocated, and Eligibility

(A) *Authority.* Authority for the approximately $20 million in one-year budget authority for Section 8 rental vouchers for non-elderly disabled families in support of designated housing plans to designate public housing for occupancy by elderly families only, disabled families only, or elderly families and disabled families only is found in the Departments of Veteran Affairs and Housing and Urban Development, and Independent Agencies Appropriations Act, 1999 (Pub. L. 105–276, approved October 21, 1998), hereinafter referred to as the 1999 Appropriations Act. The 1999 Appropriations Act also allows the Secretary to transfer any unobligated funds for this purpose to assist non-elderly disabled families to the extent they are not needed to fund approvable applications related to designated housing plans during FY 1999. Accordingly, any funding remaining unobligated under this NOFA will first be used to fund any approvable applications under NOFA FR–4413, Rental Assistance for Non-Elderly Persons With Disabilities Related to Certain Types of Section 8 Project-Based Developments and Section 202, 221(d)(3) and 236 Developments, for which there are insufficient funds. Thereafter, any funds still remaining unobligated under this NOFA shall be used to fund any approvable applications under NOFA FR–4415, Mainstream Housing Opportunities For

Persons With Disabilities, for which there are insufficient funds.

(B) *Purpose.* The purpose of the Section 8 rental voucher funding being made available under this NOFA is to *provide housing assistance to non-elderly disabled families who would have been housed by a PHA if occupancy in the designated public housing project/building (or portion thereof) were not restricted to elderly households, and assist PHAs that wish to continue to designate their projects/buildings (or portions thereof) as ''mixed elderly and disabled buildings'' and can demonstrate a need for alternative housing resources for non-elderly disabled families* that is consistent with the jurisdiction's Consolidated Plan and the low-income housing needs of the jurisdiction.

In prior fiscal years HUD provided funding for rental vouchers and certificates for designated housing plans. In FY 1999, however, HUD will be providing rental vouchers only. This is due to provisions in the Quality Housing and Work Responsibility Act of 1998 that call for the merging of the Section 8 rental voucher and certificate programs into a rental voucher program. HUD intends to publish an interim rule in the spring of FY 1999 to implement the new rental voucher program. Since successful applicants for the FY 1999 funding available under this NOFA will not be funded until after the implementation of the interim rule, rental vouchers only are being provided in FY 1999.

(C) *Amount Allocated.* This NOFA announces the availability of approximately $20 million in one-year budget authority which will provide assistance to approximately 4,200 non-elderly disabled families. *A PHA may apply for only the number of units needed to house those non-elderly disabled families that otherwise would have been housed if not for the designation of a project/building (or portion thereof) for occupancy by the elderly only. The size of the units applied for must bear a direct relationship to the size of the units designated. PHAs are limited to applying for no more than 200 units.* An eligible PHA may apply for a maximum of 200 rental vouchers.

In the event approvable applications are received for more than the approximately $20 million announced as available under this NOFA, funds will be transferred from the approximately $20 million available under NOFA FR–4413, to the extent funds remain unobligated after funding all approvable applications under that NOFA. This latter NOFA provides Section 8 rental vouchers for non-elderly disabled families not receiving housing assistance in certain Section 8 project-based developments and certain section 202, section 221(d)(3) and section 236 developments.

(D) *Eligible Applicants.* A PHA established pursuant to State law may apply for funding under this NOFA. A regional (multi-county) or State PHA is eligible to apply for funding. Indian Housing Authorities, Indian tribes and their tribally designated housing entities are no longer eligible for new increments of Section 8 funding.

Some PHAs currently administering the Section 8 rental voucher and certificate programs have, at the time of publication of this NOFA, major program management findings from Inspector General audits, HUD management reviews, or independent public accountant (IPA) audits that are open and unresolved or other significant program compliance problems. HUD will not accept applications for additional funding from these PHAs as contract administrators if, on the application due date, the findings are not closed to HUD's satisfaction. If the PHA wants to apply for funding under this NOFA, the PHA must submit an application that designates another housing agency, nonprofit agency, or contractor, that is acceptable to HUD. The PHA's application must include an agreement by the other housing agency, nonprofit agency, or contractor to administer the new funding increment on behalf of the PHA, and a statement that outlines the steps the PHA is taking to resolve the program findings. Immediately after the publication of this NOFA, the local HUD Field Office will notify, in writing, those PHAs that are not eligible to apply without such an agreement. The PHA may appeal the decision, if HUD has mistakenly classified the PHA as having outstanding management or compliance problems. Any appeal must be accompanied by conclusive evidence of HUD's error and must be received prior to the application deadline.

(E) *Eligible Participants.* Only non-elderly disabled families that are income eligible under 24 CFR 982.201(b) and who live in public housing that has been designated for occupancy by the elderly, or non-elderly disabled families who are on the PHA's public housing waiting list, may receive a rental voucher awarded in conjunction with an approved designated housing allocation plan. Such families need not be listed on the PHA's Section 8 waiting list in order to be offered and receive a Section 8 rental voucher. These families may be admitted to the Section 8 program as a special admission (24 CFR 982.203).

II. Program Requirements and Definitions

(A) *Program Requirements.* (1) *Compliance with Fair Housing and Civil Rights Laws.* All applicants must comply with all fair housing and civil rights laws, statutes, regulations, and executive orders as enumerated in 24 CFR 5.105(a). If an applicant: (a) has been charged with a systemic violation of the Fair Housing Act by the Secretary alleging ongoing discrimination; (b) is the defendant in a Fair Housing Act lawsuit filed by the Department of Justice alleging an ongoing pattern or practice of discrimination; or (c) has received a letter of noncompliance findings under Title VI of the Civil Rights Act, section 504 of the Rehabilitation Act of 1973, or section 109 of the Housing and Community Development Act, the applicant's application will not be evaluated under this NOFA if, prior to the application deadline, the charge, lawsuit, or letter of findings has not been resolved to the satisfaction of the Department. HUD's decision regarding whether a charge, lawsuit, or a letter of findings has been satisfactorily resolved will be based upon whether appropriate actions have been taken necessary to address allegations of ongoing discrimination in the policies or practices involved in the charge, lawsuit, or letter of findings.

(2) *Additional Nondiscrimination Requirements.* Applicants must comply with the Americans with Disabilities Act, and Title IX of the Education Amendments Act of 1972. In addition to compliance with the civil rights requirements listed at 24 CFR 5.105, each successful applicant must comply with the nondiscrimination in employment requirements of Title VII of the Civil Rights Act of 1964 (42 U.S.C. 2000e *et seq.*), the Equal Pay Act (29 U.S.C. 206(d)), the Age Discrimination in Employment Act of 1967 (29 U.S.C. 621 *et seq.*), and Titles I and V of the Americans with Disabilities Act (42 U.S.C. 12101 *et seq.*).

(3) *Affirmatively Furthering Fair Housing.* Each successful applicant will have a duty to affirmatively further fair housing. Applicants will be required to identify the specific steps that they will take to:

(a) Address the elimination of impediments to fair housing that were identified in the jurisdiction's Analysis of Impediments (AI) to Fair Housing Choice;

(b) Remedy discrimination in housing; or

(c) Promote fair housing rights and fair housing choice. Further, applicants have a duty to carry out the specific activities cited in their responses to address affirmatively furthering fair housing under this NOFA.

(4) *Certifications and Assurances.* Each applicant is required to submit signed copies of Assurances and Certifications. The standard Assurances and Certifications are on form HUD–52515, Funding Application, which includes the Equal Opportunity Certification, Certification Regarding Lobbying, and Certification Regarding Drug-Free Workplace Requirements.

(5) *Rental Voucher Assistance Requirements.*

(a) *Section 8 Regulations.* PHAs must administer the Section 8 rental vouchers received under this NOFA in accordance with HUD regulations and requirements governing the Section 8 rental voucher program.

(b) *Section 8 Admission Requirements.* Section 8 assistance must be provided to eligible applicants in conformity with regulations and requirements governing the Section 8 rental voucher program and the PHA's administrative plan.

(c) *Turnover.* When a rental voucher under this NOFA becomes available for reissue (e.g., the family initially selected for the program drops out of the program or is unsuccessful in the search for a unit), the rental assistance may be used only for another individual or family eligible for assistance under this NOFA, subject to appropriations for renewal funding, from the date the rental assistance is placed under an annual contributions contract (ACC).

(d) *PHA Responsibilities.* In addition to PHA responsibilities under the Section 8 rental voucher program and HUD regulations concerning nondiscrimination based on disability (24 CFR 8.28) and to affirmatively further fair housing, PHAs that receive rental voucher funding shall:

(i) Where requested by an individual, assist program participants to gain access to supportive services available within the community, but not require eligible applicants or participants to accept supportive services as a condition of participation or continued occupancy in the program.

(ii) Identify public and private funding sources to assist participants with disabilities in covering the costs of structural alterations and other accessibility features that are needed as accommodations for their disabilities.

(iii) Not deny persons who qualify for rental assistance under this program other housing opportunities, or otherwise restrict access to PHA programs to eligible applicants who choose not to participate.

(iv) Provide Section 8 search assistance.

(v) In accordance with regulatory guidance, provide higher rent to owners necessary for the provision of accessible units and structural modifications for persons with disabilities.

(vi) Provide technical assistance to owners for making reasonable accommodations or making units accessible to persons with disabilities.

(B) *Definitions.* (1) *Designated Housing Plan.* A HUD-approved allocation plan required of PHAs seeking to designate a project/building (or portion thereof) for occupancy by elderly families only, disabled families only, or elderly and disabled families only. See section 10(a) of the Housing Opportunity Extension Act of 1996, Public Law 104–120, as explained in Notice PIH 97–12(HA), Requirements for Designation of Public Housing Projects. Section 10(a) amended Section 7 of the United States Housing Act of 1937.

(2) *Elderly Family.* A family whose head of household, spouse, or sole member is 62 years or older.

(3) *Non-elderly Disabled Family.* A family who is not elderly, and whose head, spouse, or sole member is a person with disabilities. The term ''non-elderly disabled family'' may include two or more such persons with disabilities living together, and one or more such persons with disabilities living with one or more persons who are determined essential to the care and well-being of the person or persons with disabilities (live-in aides).

(4) *Person with disabilities.* A person who—

(a) Has a disability as defined in section 223 of the Social Security Act (42 U.S.C. 423), or

(b) Is determined to have a physical, mental or emotional impairment that:

(i) Is expected to be of long-continued and indefinite duration;

(ii) Substantially impedes his or her ability to live independently; and

(iii) Is of such a nature that such ability could be improved by more suitable housing conditions, or

(c) Has a developmental disability as defined in section 102 of the Developmental Disabilities Assistance and Bill of Rights Act (42 U.S.C. 6001(5)).

The term ''person with disabilities'' does not exclude persons who have the disease of acquired immunodeficiency syndrome (AIDS) or any conditions arising from the etiologic agent for acquired immunodeficiency syndrome (HIV).

Note: While the above definition of a ''person with disabilities'' is to be used for purposes of determining a family's eligibility for a Section 8 rental voucher under this NOFA, the definition of a person with disabilities contained in section 504 of the Rehabilitation Act of 1973 and its implementing regulations must be used for purposes of meeting the requirements of Fair Housing laws, including providing reasonable accommodations.

(5) *Section 8 search assistance.* Assistance to increase access by program participants to housing units in a variety of neighborhoods (including areas with low poverty concentrations) and to locate and obtain units suited to their needs.

III. Application Selection Process

After the local HUD Field Office has screened PHA applications and disapproved any applications found unacceptable for further processing, it will review all acceptable applications (exclusive of the Designated Housing Plan portion of the application—which is reviewed by the Special Application Center) to ensure that they are technically adequate and responsive to the requirements of the NOFA. The local HUD Field Office will send to the Grants Management Center, Attention: Michael Diggs, Director, 501 School Street, SW, Suite 800, Washington, DC 20024, (tel. 202–358–0273), the following information on each application that is found technically adequate and responsive:

(1) Name and address of the PHA;

(2) Date and time of the local HUD Field Office's receipt of the PHA's application;

(3) Local HUD Field Office contact person and telephone number;

(4) The number of rental vouchers in the PHA application, and the minimum number of rental vouchers acceptable to the PHA; and

(5) A completed fund reservation worksheet, indicating the number of Section 8 rental vouchers requested in the PHA application and recommended for approval by the local HUD Field Office, and the corresponding one-year budget authority.

The Special Application Center will send to the Grants Management Center the following information on each designated housing plan submitted in conjunction with this NOFA:

(1) A copy of the letter to the PHA approving or disapproving its designated housing plan.

(2) Special Application Center contact person and telephone number.

The Grants Management Center will fund on a first-come, first-served basis all approvable applications from PHAs

that are recommended for funding by the local HUD Field Offices and that the Special Application Center advises has an approved designated housing allocation plan, based upon the date and time the application is received in the local HUD Field Office. As PHAs are selected, the cost of funding the applications will be subtracted from the funds available. In the event approvable applications are received for more than the approximately $20 million announced as available under this NOFA, funds will be transferred from the approximately $20 million available under NOFA FR–4413 for non-elderly disabled families not receiving housing assistance in certain Section 8 project-based developments, or certain section 202, section 221(d)(3) or section 236 developments, to the extent funds are not needed for approvable applications under that NOFA. Applications will be funded for the total number of units requested by the PHA and approved by the Grants Management Center in accordance with this NOFA. When remaining budget authority is insufficient to fund the last selected PHA application in full, however, the Grants Management Center will fund that application to the extent of the funding available, unless the PHA's application indicates it will only accept a higher number of units. In that event, the next selected application shall be one that has indicated a willingness to accept the lesser amount of funding for units available.

IV. Application Submission Requirements

(A) *Form HUD–52515.* All PHAs must complete and submit form HUD–52515, Funding Application, for the Section 8 rental voucher program (dated January 1996). This form includes all necessary certifications for Fair Housing, Drug Free Workplace and Lobbying Activities. An application must include the information in Section (C), Average Monthly Adjusted Income, of form HUD–52515 in order for HUD to calculate the amount of Section 8 budget authority necessary to fund the requested number of units. The bedroom size and number of requested units must bear a direct relationship to the bedroom size and number of units designated in the PHA's allocation plan that will no longer be available for the future admission of non-elderly disabled families. Copies of form HUD–52515 may be obtained from the local HUD Field Office, or may be downloaded from the HUD Home Page site on the Internet's world wide web (http://www.hud.gov).

(B) *Letter of Intent and Narrative.* All the items in this section must be included in the application submitted to the local HUD Field Office. The PHA must state in its cover letter to the application whether it will accept a reduction in the number of rental vouchers , and the minimum number of rental vouchers it will accept, since the funding is limited and HUD may only have enough funds to approve a smaller amount than the number of rental vouchers requested. The maximum number of rental vouchers that a PHA may apply for under this NOFA is limited to 200.

(C) *Approvable Designated Housing Plan.* The application must include an approvable plan to designate housing in accordance with section 10(a) of the Housing Opportunities Extension Act of 1996, Public Law 104–120, as explained in Notice PIH 97–12 (HA), Requirements for Designation of Public Housing Projects.

(D) *Designated Housing Plan Previously Approved.* Any PHA wishing to rely on a designated housing plan previously approved by HUD that did not require Section 8 rental vouchers or certificates for non-elderly disabled families or that now requires more Section 8 rental vouchers than previously justified, will require the PHA to submit the information required in paragraphs (A) and (B) above, a copy of the previously HUD-approved designated housing plan, and updated needs data supporting the need now for Section 8 rental vouchers not previously deemed necessary as an alternative housing resource. The updated needs data should indicate why the PHA does not have the appropriate resources to carry out the previously approved plan, identifying the number of Section 8 rental vouchers needed for non-elderly disabled families, and addressing the housing needs in its consolidated plan.

Conversely, any PHA wishing to rely on a designated housing plan previously approved by HUD, contingent upon the PHA's future submission of an application for Section 8 rental certificates or vouchers as an alternative housing resource for non-elderly disabled families, will need to submit the information required by paragraphs (A) and (B) above, but need only submit the HUD-approval letter for the designated housing plan in lieu of the plan itself (updated needs data also unnecessary).

Note: *Notice of Repeal of Local Government Comment Requirements.* Local government comments that HUD was previously required to obtain from the unit of general local government on PHA applications for Section 8 rental assistance under Section 213(c) of the Housing and Community Development Act of 1974 are no longer required. Section 551 of the Quality Housing and Work Responsibility Act of 1998 (Pub. L. 105–276, 112 Stat. 2461, approved October 21, 1998) (QHWRA) repealed the provisions of Section 213(c) of the Housing and Community Development Act of 1974. Although section 503 of QHWRA establishes an effective date of October 1, 1999, for its provisions unless otherwise specifically provided, section 503 also permits any QHWRA provision or amendment to be implemented by notice, unless otherwise specifically provided. Accordingly, HUD's Notice of Initial Guidance on the QHWRA, published on February 18, 1999 (64 FR 8192), provided the notice of immediate implementation of section 551 of QHWRA, as permitted by section 503 of QHWRA.

V. Corrections to Deficient Applications

(A) *Acceptable Applications.* To be eligible for processing, an application must be received by the local HUD Field Office no later than the date and time specified in this NOFA. The local HUD Field Office will initially screen all applications and notify PHAs of technical deficiencies (exclusive of the designated housing plan) by letter. The Special Applications Center will review the designated housing plan portion of the application and advise the PHA by letter as to approval/disapproval of the plan.

If an application has technical deficiencies, the PHA will have 14 calendar days from the date of the issuance of the local HUD Field Office's notification letter to submit and the local HUD Field Office receive the missing or corrected information before the application can be considered for further processing by HUD. Curable technical deficiencies relate only to items that do not improve the substantive quality of the application.

Information received by the local HUD Field Office after 3 p.m. local HUD Field Office time on the 14th calendar day of the correction period will not be accepted and the application will be rejected as incomplete.

(B) *Unacceptable Applications.* (1) After the 14-calendar day technical deficiency correction period, the local HUD Field Office will disapprove all PHA applications that it determines are not acceptable for processing. The local HUD Field Office's notification of rejection letter must state the basis for the decision.

(2) Applications from PHAs for Section 8 rental assistance that fall into any of the following categories will not be processed:

(a) Applications from PHAs that do not meet the requirements of Section

II(A)(1) of this NOFA, Compliance With Fair Housing and Civil Rights Laws.

(b) The PHA has serious unaddressed, outstanding Inspector General audit findings, HUD management review findings, or independent public accountant (IPA) findings for its rental voucher or rental certificate programs; or the PHA has failed to achieve a lease-up rate of 90 percent of units in its HUD-approved budget for the PHA fiscal year prior to application for funding in each of its rental voucher and certificate programs (excluding the impact of the three-month statutory delay requirement effective in FY 1997 and 1998 for the reissuance of rental vouchers or certificates). The only exception to this category is if the PHA has been identified under the policy established in Section I.(D) of this NOFA and the PHA makes application with a designated contract administrator.

(c) The PHA is involved in litigation and HUD determines that the litigation may seriously impede the ability of the PHA to administer the rental vouchers.

(d) A PHA's application that does not comply with the requirements of 24 CFR 982.102 and this NOFA after the expiration of the 14-calendar day technical deficiency correction period will be rejected from processing.

(e) The PHA's application was submitted after the application due date.

VI. Findings and Certifications

(A) *Paperwork Reduction Act Statement.* The information collection requirements contained in this NOFA have been approved by the Office of Management and Budget in accordance with the Paperwork Reduction Act of 1995 (44 U.S.C. 3501–3520), and assigned OMB control number 2577–0169. An agency may not conduct or sponsor, and a person is not required to respond to, a collection of information unless the collection displays a valid control number.

(B) *Environmental Impact.* In accordance with 24 CFR 50.19(b)(11) of the HUD regulations, tenant-based activities assisted under this program are categorically excluded from the requirements of the National Environmental Policy Act and are not subject to environmental review under the related laws and authorities. In accordance with 24 CFR 50.19(c)(5), the approval for issuance of this NOFA is categorically excluded from environmental review under the National Environmental Policy Act of 1969 (42 U.S.C. 4321).

(C) *Catalog of Federal Domestic Assistance Numbers.* The Federal Domestic Assistance number for this program is 14.857.

(D) *Federalism Impact.* The General Counsel, as the Designated Official under section 6(a) of Executive Order 12612, *Federalism*, has determined that the policies contained in this NOFA will not have substantial direct effects on States or their political subdivisions, or the relationship between the Federal Government and the States, or on the distribution of power and responsibilities among the various levels of government. As a result, the notice is not subject to review under the Order. This notice is a funding notice and does not substantially alter the established roles of HUD, the States, and local governments, including PHAs.

(E) *Accountability in the Provision of HUD Assistance.* Section 102 of the Department of Housing and Urban Development Reform Act of 1989 (HUD Reform Act) and the regulations in 24 CFR part 4, subpart A contain a number of provisions that are designed to ensure greater accountability and integrity in the provision of certain types of assistance administered by HUD. On January 14, 1992 (57 FR 1942), HUD published a notice that also provides information on the implementation of section 102. HUD will comply with the documentation, public access, and disclosure requirements of section 102 with regard to the assistance awarded under this NOFA, as follows:

(1) *Documentation and public access requirements.* HUD will ensure that documentation and other information regarding each application submitted pursuant to this NOFA are sufficient to indicate the basis upon which assistance was provided or denied. This material, including any letters of support, will be made available for public inspection for a 5-year period beginning not less than 30 days after the award of the assistance. Material will be made available in accordance with the Freedom of Information Act (5 U.S.C. 552) and HUD's implementing regulations at 24 CFR part 15. In addition, HUD will include the recipients of assistance pursuant to this NOFA in its **Federal Register** notice of all recipients of HUD assistance awarded on a competitive basis.

(2) *Disclosures.* HUD will make available to the public for 5 years all applicant disclosure reports (HUD Form 2880) submitted in connection with this NOFA. Update reports (also Form 2880) will be made available along with the applicant disclosure reports, but in no case for a period less than 3 years. All reports—both applicant disclosures and updates—will be made available in accordance with the Freedom of Information Act (5 U.S.C. 552) and HUD's implementing regulations at 24 CFR part 15.

(F) *Section 103 HUD Reform Act.* HUD will comply with section 103 of the Department of Housing and Urban Development Reform Act of 1989 and HUD's implementing regulations in subpart B of 24 CFR part 4 with regard to the funding competition announced today. These requirements continue to apply until the announcement of the selection of successful applicants. HUD employees involved in the review of applications and in the making of funding decisions are limited by section 103 from providing advance information to any person (other than an authorized employee of HUD) concerning funding decisions, or from otherwise giving any applicant an unfair competitive advantage. Persons who apply for assistance in this competition should confine their inquiries to the subject areas permitted under section 103 and subpart B of 24 CFR part 4.

Applicants or employees who have ethics related questions should contact the HUD Office of Ethics (202) 708–3815. (This is not a toll-free number.) For HUD employees who have specific program questions, such as whether particular subject matter can be discussed with persons outside HUD, the employee should contact the appropriate Field Office Counsel.

(G) *Prohibition Against Lobbying Activities.* Applicants for funding under this NOFA are subject to the provisions of section 319 of the Department of Interior and Related Agencies Appropriation Act for Fiscal Year 1991 (31 U.S.C. 1352) (the Byrd Amendment) and to the provisions of the Lobbying Disclosure Act of 1995 (Pub. L. 104–65; approved December 19, 1995).

The Byrd Amendment, which is implemented in regulations at 24 CFR part 87, prohibits applicants for Federal contracts and grants from using appropriated funds to attempt to influence Federal executive or legislative officers or employees in connection with obtaining such assistance, or with its extension, continuation, renewal, amendment, or modification. The Byrd Amendment applies to the funds that are the subject of this NOFA. Therefore, applicants must file a certification stating that they have not made and will not make any prohibited payments and, if any payments or agreement to make payments of nonappropriated funds for these purposes have been made, a form SF–LLL disclosing such payments must be submitted. The certification and the SF–LLL are included in the application.

The Lobbying Disclosure Act of 1995 (Pub. L. 104–65; approved December 19, 1995), which repealed section 112 of the HUD Reform Act, requires all persons and entities who lobby covered executive or legislative branch officials to register with the Secretary of the Senate and the Clerk of the House of Representatives and file reports concerning their lobbying activities.

Dated: March 2, 1999.

Harold Lucas,

Assistant Secretary for Public and Indian Housing.

[FR Doc. 99–5576 Filed 3–5–99; 8:45 am]

BILLING CODE 4210–33–P

federal register

Monday
March 8, 1999

Part XI

Department of Housing and Urban Development

Mainstream Housing Opportunities for Persons With Disabilities (Mainstream Program) Fiscal Year 1999 Funding Availability; Notice

DEPARTMENT OF HOUSING AND URBAN DEVELOPMENT

[Docket No. FR–4415–N–01]

Notice of Funding Availability, Mainstream Housing Opportunities for Persons With Disabilities, (Mainstream Program) Fiscal Year 1999

AGENCY: Office of the Assistant Secretary for Public and Indian Housing, HUD.

ACTION: Notice of Funding Availability (NOFA).

SUMMARY: Purpose of the Program. The purpose of this program is to provide Section 8 rental vouchers to enable persons with disabilities (elderly and non-elderly) to rent affordable private housing.

Available Funds. Approximately $48.5 million in five-year budget authority for approximately 1,600 rental vouchers is available under this NOFA. Although the NOFA issued on April 30, 1998, for the FY 1998 Mainstream Program (FR–4359) indicated that approvable applications not funded in FY 1998 would receive priority for funding in FY 1999 contingent upon FY 1999 appropriations, HUD must depart from this approach. With the enactment of the Departments of Veterans Affairs and Housing and Urban Development, and Independent Agencies Appropriations Act, 1999 (Pub. L. 105–276, 112 Stat. 2461, approved October 21, 1998), Congress directed HUD in the FY 1999 House Committee Report to broaden the *Section 811* Mainstream Program's eligible applicants to include disability non-profit organizations, as well as PHAs.

Consequently, the approximately $48.5 million available under this NOFA will be used to fund new FY 1999 Section 811 program applications submitted in response to this NOFA by PHAs and non-profit disability organizations. PHAs with unfunded FY 1998 Mainstream Program applications will need to submit a new application, in accordance with the requirements of this NOFA, in order to be eligible to receive any FY 1999 Mainstream Program funding.

Applications are also being invited, however, from PHAs for one-year budget authority funding (non-Section 811 funds) that HUD anticipates may be available for the Mainstream Program in FY 1999. Specifically, any portion of the $40 million in one-year budget authority in FY 1999 appropriations related to designated housing plans, preferences in occupancy for the elderly in certain types of Section 8 project-based developments, or restrictions in occupancy to elderly only in certain types of section 202, section 221(d)(3), or section 236 developments remaining unobligated will be added to the approximately $48.5 million available under this NOFA. This one-year budget authority will be for use only for non-elderly disabled families.

Eligible Applicants. PHAs and non-profit disability organizations that provide services to disabled families are eligible to apply for the $48.5 million in five-year budget authority available under this NOFA for applications submitted in FY 1999. Only PHAs are eligible to apply for the one-year budget authority (up to a maximum of $40 million) that may otherwise be available under this NOFA. Indian Housing Authorities, Indian tribes and their tribally designated housing entities are not eligible to apply.

The rental vouchers that HUD will provide under this NOFA must be made available to eligible disabled families regardless of their type of disability. (See the definition of disabled family in paragraph II(B)(1) of this NOFA.)

Application Deadline. May 7, 1999.

Match. None.

Additional Information

If you are interested in applying for funding under the Mainstream Program, please read the balance of this NOFA which will provide you with detailed information regarding the submission of an application, Section 8 program requirements, the application selection process to be used by HUD in selecting applications for funding, and other valuable information relative to a PHA's or non-profit disability organization's application submission and participation in the Mainstream Program. New for FY 1999 is HUD's opening of the Mainstream Program to the receipt of applications from non-profit disability organizations that provide services to disabled families. Also new is HUD's encouragement to PHAs and non-profit disability organizations to view each other as a possible contract administrator, or to be otherwise involved in the administration of the Section 8 vouchers that either party might receive under this NOFA.

Application Due Date and Application Submission

Delivered Applications. The application deadline for delivered applications for the Mainstream Program is May 7, 1999, 6:00 p.m. local HUD Field Office HUB or local HUD Field Office Program Center time.

The above-stated application deadline is firm as to date and hour. In the interest of fairness to all competing public housing agencies, HUD will treat as ineligible for consideration any application that is not received by the application deadline. Applicants should submit their materials as early as possible to avoid any risk of loss of eligibility because of unanticipated delays or other delivery-related problems. HUD will not accept, at any time during the NOFA competition, application materials sent by facsimile (FAX) transmission.

Mailed Applications. Applications for the Mainstream Program will be considered timely filed if postmarked before midnight on the application due date and received by the local HUD Field Office HUB or local HUD Field Office Program Center within ten (10) days of that date.

Applications Sent By Overnight Delivery. Overnight delivery items will be considered timely filed for the Mainstream Program if received before or on the application due date, or upon submission of documentary evidence that they were placed in transit with the overnight delivery service by no later than the specified application due date.

Official Place of Application Receipt. The original and a copy of the application should be submitted to the local HUD Field Office HUB, Attention: Director, Office of Public Housing, or to the local HUD Field Office Program Center, Attention: Program Center Coordinator. The local HUD Field Office is the official place of receipt for all applications submitted in response to this NOFA. For ease of reference, the term ''local HUD Field Office'' will be used throughout this NOFA to mean the local HUD Field Office HUB and local HUD Field Office Program Center.

For Application Kits, Further Information and Technical Assistance

For Application Kits. An application kit is not being made available and is not necessary for submitting an application for Mainstream Program funding.

For Further Information. For answers to your questions, you have two options. You may contact the local HUD Field Office, or you may contact George C. Hendrickson, Housing Program Specialist, Office of Public and Assisted Housing Delivery, Department of Housing and Urban Development, Room 4216, 451 Seventh Street, SW, Washington, DC 20410–8000; telephone (202) 708–1872, ext. 4064. (The number listed above is not a toll-free number). Persons with hearing or speech impairments may access this number via TTY (text telephone) by calling the Federal Information Relay Service at 1–

800–877–8339 (this is a toll-free number).

For Technical Assistance. Prior to the application due date, George Hendrickson of HUD's Headquarters staff (at the address and telephone number indicated above) will be available to provide general guidance and technical assistance about this NOFA. Current law does not permit HUD staff to assist in preparing the application. Following selection, but prior to award, HUD staff will be available to assist in clarifying or confirming information that is a prerequisite to the offer of an award by HUD.

I. Authority, Purpose, Amount Allocated, and Eligibility

(A) *Authority*. Authority for the approximately $48.5 million in 5-year budget authority available for the Mainstream Program under this NOFA (general use rental assistance for persons with disabilities) is found in the Departments of Veterans Affairs and Housing and Urban Development, and Independent Agencies Appropriations Act, 1999 (Pub. L. 105–276, approved October 21, 1998), referred to in this NOFA as the HUD FY 1999 Appropriations Act. The HUD FY 1999 Appropriations Act states that the Secretary may designate up to 25 percent of the amounts earmarked for Section 811 of the National Affordable Housing Act of 1990 (42 U.S.C. 8013) for tenant-based assistance, as authorized under that section. The HUD FY 1999 Appropriations Act provides the Secretary of HUD with the authority to waive any provision of section 811 that the Secretary determines is not necessary to achieve the objectives of tenant-based assistance. Accordingly, the Secretary hereby exercises this waiver authority in order to allow non-profit disability organizations to be eligible to apply for the five-year budget authority for which new applications are being requested under this NOFA for FY 1999; i.e., $48.5 million.

The HUD FY 1999 Appropriations Act also authorizes the use of approximately $40 million in one-year budget authority for Section 8 rental vouchers for non-elderly disabled families in support of designated housing plans, for non-elderly disabled families who are not currently receiving housing assistance in certain Section 8 project-based developments due to the owners establishing preferences for the admission of elderly families, and for nonelderly disabled families not being housed in certain section 202, section 221(d)(3) and section 236 developments (or portions thereof) where the owners have restricted occupancy to elderly families. The HUD FY 1999 Appropriations Act states that to the extent the Secretary determines that the FY 1999 appropriations related to designated housing plans and certain types of Section 8 project-based developments and certain types of section 202, section 221(d)(3) and section 236 developments are not needed to fund applications, the funds may be used for other non-elderly disabled families. Any such remaining funds will be used to supplement funding for the Mainstream Program. As a result, as much as $40 million in one-year budget authority may be available in additional funding in FY 1999 for the Mainstream Program.

(B) *Purpose*. The Secretary has established a Mainstream Housing Opportunities for Persons with Disabilities Program (Mainstream Program) to provide rental vouchers to enable persons with disabilities to rent affordable private housing of their choice. In prior fiscal years HUD provided funding for rental vouchers and certificates for the Mainstream Program. In FY 1999, however, HUD will be providing rental vouchers only for this program. This is due to provisions in the Quality Housing and Work Responsibility Act of 1998 (Pub. L. 105–276, 112 Stat. 2461, approved October 21, 1998) (QHWRA) that call for the merging of the Section 8 rental voucher and certificate programs into a rental voucher program. HUD intends to publish an interim rule in the spring of FY 1999 to implement the new rental voucher program. Since successful applicants for the FY 1999 Mainstream Program will not be funded until after the implementation of the interim rule, rental vouchers only are being provided this year for the Mainstream Program.

The Mainstream Program will assist PHAs and non-profit disability organizations in providing Section 8 rental vouchers to a segment of the population recognized by HUD's housing research as having one of the worst case housing needs of any group in the United States; i.e., very low-income households with adults with disabilities. In addition, the Mainstream Program will assist persons with disabilities who often face difficulties in locating suitable and accessible housing on the private market.

(C) *Amount Allocated*. Approximately $48.5 million in five year funding for approximately 1,600 rental vouchers. All of the approximately $48.5 million in funding is for use in the housing of elderly and non-elderly disabled families.

HUD will supplement the Mainstream Program funding with additional funding, up to as much as $40 million in one-year budget authority for approximately 8,200 rental vouchers, to the extent this budget authority is not needed during FY 1999 to fund applications in support of designated housing plans under NOFA FR–4412, or to fund applications related to non-elderly disabled families on the waiting lists of certain types of Section 8 project-based developments where the owner has established a preference for the admission of elderly families, or applications related to non-elderly disabled families on the waiting lists of section 202, section 221(d)(3) or section 236 developments where the owner has restricted occupancy in the project (or portion thereof) to elderly families under NOFA FR–4413. Applications for this one-year budget authority that may be available for the Mainstream Program may be submitted by PHAs only.

HUD will select approvable applications for funding by lottery in the event approvable applications are received for more funding than is available under this NOFA FR–4415. In such event, a separate lottery will be held to select applications for funding for the $48.5 million available in five-year budget authority available under this NOFA, and a separate lottery will be held to select applications for funding for whatever amount of one-year budget authority may be available during FY 1999 for the Mainstream Program. PHA applicants should clearly indicate in their applications if they are applying for both one-year and five-year funding in order to ensure their inclusion in both lotteries. PHA applicants, both those applying solely for one-year funding as well as those submitting a single application requesting both five-year or one-year funding, must make it clear in their applications that they have a sufficient number of non-elderly disabled families to support the number of rental vouchers being requested for one-year funding.

There is a limit on the number of rental vouchers that may be requested. An eligible PHA or non-profit disability organization may apply for a maximum of 75 rental vouchers.

(D) *Eligible Applicants*. A PHA established pursuant to State law may apply for either, or both the one-year and five-year funding under this NOFA. Non-profit disability organizations that provide services to disabled families may apply only for the five-year funding under this NOFA. Indian Housing Authorities, Indian tribes and their tribally designated housing entities are

no longer eligible for new increments of Section 8 funding. A regional (multi-county) or State PHA is eligible to apply for funding.

PHAs are encouraged to involve non-profit disability organizations, that provide services to disabled families, in the administration of the Mainstream Program's rental vouchers. Such non-profit disability organizations could function as either a contract administrator for the PHA's Section 8 Mainstream vouchers, or as a subcontractor responsible for providing case management services or assisting disabled families to locate suitable housing, gain access to supportive services, or identify private funding sources to cover the costs of unit modifications needed as a reasonable accommodation. Such contractual arrangements must, however, ensure equal opportunity among the wide variety of disabled populations in the PHA's service area. PHAs are being encouraged to seek out non-profit disability organizations to assist in the administration of the Mainstream vouchers due to such organizations' capacity for assisting disabled families, as well as their in-depth knowledge of the disability community. Likewise, non-profit disability organizations are encouraged to seek out PHAs in their geographic area to develop cooperative contractual relationships under the Mainstream Program, and to enhance services to disabled families. In addition to contacting local PHAs, non-profit disability organizations may also wish to contact regional (multi-county), or state-wide PHAs who may be applying for Mainstream Program funding.

Some PHAs currently administering the Section 8 rental voucher and certificate programs have, at the time of publication of this NOFA, major program management findings from Inspector General audits, HUD management reviews, or independent public accountant (IPA) audits that are open and unresolved or other significant program compliance problems. HUD will not accept applications for additional funding from these PHAs as contract administrators if, on the application due date, the findings are not closed to HUD's satisfaction. If the PHA wants to apply for funding under this NOFA, the PHA must submit an application that designates another housing agency, nonprofit agency, or contractor, that is acceptable to HUD. The PHA's application must include an agreement by the other housing agency, nonprofit agency, or contractor to administer the new funding increment on behalf of the PHA, and a statement that outlines the steps the PHA is taking to resolve the program findings. Immediately after the publication of this NOFA, the Office of Public Housing in the local HUD Field Office will notify, in writing, those PHAs that are not eligible to apply without such an agreement. The PHA may appeal the decision, if HUD has mistakenly classified the PHA as having outstanding management or compliance problems. Any appeal must be accompanied by conclusive evidence of HUD's error and must be received prior to the application deadline.

A provision in the FY 1999 House Committee Report concerning HUD's FY 1999 appropriations called for HUD to allow non-profit disability organizations to apply directly to HUD for the 25 percent of section 811 funds to be made available for the Mainstream Program. A non-profit disability organization wishing to apply for the five-year funding available under this NOFA must have the capacity to:

(1) Comply with the Section 8 Management Assessment Program (SEMAP) certification requirements under 24 CFR Part 985.

(2) Carry out such Section 8 and SEMAP specific related activities as making determinations as to rent reasonableness, performing housing quality standards (HQS) inspections and enforcement, conducting annual reexaminations of participant families, as well as otherwise meeting Section 8 program requirements under 24 CFR parts 887 and 982.

(3) Manage the Section 8 Mainstream Program vouchers in a manner equivalent to an overall performance rating under SEMAP (24 CFR Part 985) of ''standard'' during the first fiscal year of its receiving Mainstream Program funding.

(4) Administer rental housing programs or manage rental housing, as demonstrated by a specific list of rental housing programs the nonprofit disability organization has administered or the rental housing the organization has managed (e.g., private rental housing, HUD or State-related housing programs, etc.).

(E) *Eligible Participants.* Only a disabled family that is income eligible under 24 CFR 982.201(b) may receive a rental voucher awarded under the Mainstream Program. While elderly and non-elderly disabled families are eligible to receive a Section 8 rental voucher awarded to a PHA or non-profit disability organization using five-year budget authority under this NOFA, only non-elderly disabled families are eligible to receive a rental voucher awarded to a PHA using one-year budget authority that may be available for the Mainstream Program under this NOFA. Applicants with disabilities will be selected from the PHA's or non-profit disability organization's Section 8 waiting list.

II. Program Requirements and Definitions

(A) *Program Requirements.* (1) *Compliance With Fair Housing and Civil Rights Laws.* All applicants must comply with all fair housing and civil rights laws, statutes, regulations, and executive orders as enumerated in 24 CFR 5.105(a). If an applicant: (a) has been charged with a systemic violation of the Fair Housing Act by the Secretary alleging ongoing discrimination; (b) is the defendant in a Fair Housing Act lawsuit filed by the Department of Justice alleging an ongoing pattern or practice of discrimination; or (c) has received a letter of noncompliance findings under Title VI of the Civil Rights Act of 1964, section 504 of the Rehabilitation Act of 1973, or section 109 of the Housing and Community Development Act of 1974, the applicant's application will not be evaluated under this NOFA if, prior to the application deadline, the charge, lawsuit, or letter of findings has not been resolved to the satisfaction of the Department. HUD's decision regarding whether a charge, lawsuit, or a letter of findings has been satisfactorily resolved will be based upon whether appropriate actions have been taken necessary to address allegations of ongoing discrimination in the policies or practices involved in the charge, lawsuit, or letter of findings.

(2) *Additional Nondiscrimination Requirements.* Applicants must comply with the Americans with Disabilities Act, and Title IX of the Education Amendments Act of 1972. In addition to compliance with the civil rights requirements listed at 24 CFR 5.105, each successful applicant must comply with the nondiscrimination in employment requirements of Title VII of the Civil Rights Act of 1964 (42 U.S.C. 2000e *et seq.*), the Equal Pay Act (29 U.S.C. 206(d)), the Age Discrimination in Employment Act of 1967 (29 U.S.C. 621 *et seq.*), and Titles I and V of the Americans with Disabilities Act (42 U.S.C. 12101 *et seq.*).

(3) *Affirmatively Furthering Fair Housing.* Each successful applicant will have a duty to affirmatively further fair housing. Applicants will be required to identify the specific steps that they will take to: (a) address the elimination of impediments to fair housing that were identified in the jurisdiction's Analysis of Impediments (AI) to Fair Housing Choice; (b) remedy discrimination in

housing; or (c) promote fair housing rights and fair housing choice.

(4) *Certifications and Assurances.* Each applicant is required to submit signed copies of Assurances and Certifications. The standard Assurances and Certifications are on Form HUD–52515, Funding Application, which includes the Equal Opportunity Certification, Certification Regarding Lobbying, and Certification Regarding Drug-Free Workplace Requirements.

(5) *Rental Voucher Assistance Requirements.*

(a) Section 8 regulations. PHAs and non-profit disability organizations must administer the Mainstream Program in accordance with HUD regulations and requirements governing the Section 8 rental voucher program.

(b) Section 8 admission requirements. Section 8 assistance must be provided to eligible applicants in conformity with regulations and requirements governing the Section 8 rental voucher program and the PHA's and non-profit disability organization's administrative plan.

If there is ever an insufficient pool of disabled families on the PHA or non-profit disability organization's Section 8 waiting list, the PHA/non-profit disability organization shall conduct outreach to encourage eligible persons to apply for this special allocation of rental vouchers. Outreach may include contacting independent living centers, advocacy organizations for persons with disabilities, and medical, mental health, and social service providers for referrals of persons receiving such services who would benefit from Section 8 assistance. If the PHA's or non-profit disability organization's Section 8 waiting list is closed, and if the PHA or non-profit disability organization has insufficient applicants on its Section 8 waiting list to use all awarded rental vouchers under this NOFA, the PHA shall open the waiting list for applications from disabled families.

(c) *Turnover.* When a rental voucher under this NOFA becomes available for reissue (e.g., the family initially selected for the program drops out of the program or is unsuccessful in the search for a unit), the rental assistance may be used only for another individual or family eligible for assistance under this NOFA for five years for the five-year funding or for one year for the one-year funding under this NOFA from the date the rental assistance is placed under an annual contributions contract (ACC).

(d) *PHA and Non-Profit Disability Organization Responsibilities.* In addition to the responsibilities under the Section 8 rental voucher program and HUD regulations concerning nondiscrimination based on disability (24 CFR 8.28) and to affirmatively further fair housing, PHAs that receive rental voucher funding shall:

(i) Where requested by an individual, assist program participants to gain access to supportive services available within the community, but not require eligible applicants or participants to accept supportive services as a condition of participation or continued occupancy in the program.

(ii) Identify public and private funding sources to assist participants in covering the costs of modifications that need to be made to their units as a reasonable accommodation for their disabilities.

(iii) Not deny persons who qualify for rental assistance under this program other housing opportunities, or otherwise restrict access to PHA or non-profit disability organization programs to eligible applicants who choose not to participate.

(iv) Provide Section 8 search assistance.

(v) In accordance with regulatory guidance, provide higher rents to owners necessary for the provision of accessible units and structural modifications for persons with disabilities.

(vi) Provide technical assistance to owners for making reasonable accommodations or making units accessible to persons with disabilities.

(B) *Definitions.* (1) *Disabled Family.* A family whose head, spouse, or sole member is a person with disabilities. The term ''disabled family'' may include two or more persons with disabilities living together, and one or more persons with disabilities living with one or more live-in aides. A disabled family may include a person with disabilities who is elderly. (Note: This definition applies to the approximately $48.5 million available under the Mainstream Program. This definition shall be modified, however, to be limited solely to non-elderly disabled families (families whose head, spouse or sole member is disabled and under the age of 62) regarding any funding available and awarded from the approximately $40 million in FY 1999 for designated housing allocation plans, or in connection with certain Section 8 project-based developments or certain section 202, section 221(d)(3) or section 236 developments. See the **SUMMARY** section at the beginning of this NOFA regarding the possibility of additional Mainstream Program funding during FY 1999 beyond the approximately $48.5 million available as announced under this NOFA.)

(2) *Nonprofit disability organization.* A private organization, no part of the net earnings of which inures to the benefit of any member, founder, contributor, or individual, that provides assistance to persons with disabilities, as defined in section 811, and has received a federal tax-exempt designation from the U.S. Internal Revenue Service. The organization must:

(a) Have a voluntary board;

(b) Be authorized by its charter or State law to enter into a contract with the Federal Government to provide housing assistance;

(c) Have a functioning accounting system that is operated in accordance with generally accepted accounting principles, or designate an entity that will maintain a functioning accounting system for the organization in accordance with generally accepted accounting principles; and

(d) Practice nondiscrimination in the provision of assistance.

(3) *Person with disabilities.* A person who—

(a) Has a disability as defined in section 223 of the Social Security Act (42 U.S.C. 423), or

(b) Is determined to have a physical, mental or emotional impairment that:

(i) Is expected to be of long-continued and indefinite duration;

(ii) Substantially impedes his or her ability to live independently; and

(iii) Is of such a nature that such ability could be improved by more suitable housing conditions, or

(c) Has a developmental disability as defined in section 102 of the Developmental Disabilities Assistance and Bill of Rights Act (42 U.S.C. 6001(5)).

The term ''person with disabilities'' does not exclude persons who have the disease of acquired immunodeficiency syndrome (AIDS) or any conditions arising from the etiologic agent for acquired immunodeficiency syndrome (HIV).

Note: While the above definition of a ''person with disabilities'' is to be used for purposes of determining a family's eligibility for a Section 8 rental voucher under this NOFA, the definition of a person with disabilities contained in section 504 of the Rehabilitation Act of 1973 and its implementing regulations must be used for purposes of reasonable accommodations.

(4) *Section 8 search assistance.* Assistance to increase access by program participants to housing units in a variety of neighborhoods (including areas with low poverty concentrations) and to locate and obtain units suited to their needs.

III. Application Selection Process For Mainstream Program

After the local HUD Field Office has screened PHA and non-profit disability organization applications and disapproved any applications found unacceptable for further processing, the local HUD Field Office will review all acceptable applications to ensure that they are technically adequate and responsive to the requirements of the NOFA. The local HUD Field Office will send to the Grants Management Center, Attention: Michael Diggs, Director, 501 School Street, SW, Suite 800, Washington, DC 20024, (tel. 202–358–0273), the following information on each application that is found technically adequate and responsive:

(1) Name and address of the PHA or non-profit disability organization;

(2) Local HUD Field Office contact person and telephone number;

(3) The number of rental vouchers in the PHA application, and the minimum number of rental vouchers acceptable to the PHA; and

(4) A completed fund reservation worksheet, indicating the number of Section 8 rental vouchers requested in the PHA application and recommended for approval by the local HUD Field Office, and the corresponding five-year and/or one-year budget authority.

HUD Headquarters will fund all applications from PHAs that are recommended for funding by the local HUD Field Offices unless HUD receives approvable applications for more funds than are available. If HUD receives approvable applications for more funds than are available, HUD will select applicants to be funded by lottery. A separate lottery will be held for those applicants seeking funding under the five-year budget authority available under this NOFA, and a separate lottery will be held for those PHAs seeking funding under the one-year budget authority that may be available under this NOFA. All applicants identified by the local HUD Field Offices as having submitted technically adequate and responsive applications will be included in the lottery. As applicants are selected, the cost of funding the applications will be subtracted from the funds available. In order to achieve geographic diversity, HUD Headquarters will limit the number of applications selected for funding from any State to 10 percent of the budget authority available for the general use Mainstream Program. If establishing this geographic limit would result, however, in unreserved budget authority, HUD may modify this limit to assure that all available funds are used.

Applications will be funded for the total number of units requested by the PHA and recommended for approval by the local HUD Field Office (not to exceed 75 units) in accordance with this NOFA. When remaining budget authority is insufficient to fund the last selected application in full, however, HUD Headquarters will fund that application to the extent of the funding available, unless the applicant indicates it will only accept a higher number of units. In that event, the next selected application shall be one that has indicated a willingness to accept the lesser amount of funding for units available.

IV. Application Submission Requirements for Mainstream Program

(A) *Form HUD–52515.* All applicants must complete and submit form HUD–52515, Funding Application, for the Section 8 rental voucher program (dated January 1996). This form includes all necessary certifications for Fair Housing, Drug Free Workplace and Lobbying Activities. An application must include the information in Section (C), Average Monthly Adjusted Income, of form HUD–52515 in order for HUD to calculate the amount of Section 8 budget authority necessary to fund the requested number of units. Copies of form HUD–52515 may be obtained from the local HUD Field Office or may be downloaded from the HUD Home Page site on the Internet's world wide web (http://www.hud.gov).

(B) *Letter of Intent and Narrative.* The applicant must state in its cover letter to the application whether it will accept a reduction in the number of rental vouchers, and the minimum number of rental vouchers it will accept, since the funding is limited and HUD may only have enough funds to approve a smaller amount than the number of rental vouchers requested. The maximum number of rental vouchers that an applicant may apply for under this NOFA is limited to 75. The applicant should also indicate whether or not it intends to enter into a contract with a non-profit disability organization to serve as the contract administrator of the Section 8 Mainstream Program vouchers, or to otherwise provide services related to the Mainstream Program (see Section I(D) of this NOFA).

(C) *Description of Need for Mainstream Program Rental Assistance.* The application must demonstrate a need for Mainstream Program rental vouchers by providing information documenting that the demand for housing for non-elderly persons with disabilities would equal or exceed the requested number of rental vouchers. The applicant must assess and document the housing need for non-elderly persons with disabilities using a range of sources including, but not limited to: census data, information from the applicant's waiting list (both public housing and Section 8), statistics on recent public housing admissions and rental certificate and voucher use, data from local advocacy groups and local public and private service agencies familiar with the housing needs of non-elderly persons with disabilities, and pertinent information from the Consolidated Plan applicable to the applicant's jurisdiction. (See 24 CFR 91.205(d).) The applicant's demonstrated need for rental vouchers must clearly support need on the basis of non-elderly disabled families. This distinction is important, as any FY 1999 Mainstream Program funding that may be available beyond the approximately $48.5 million under this NOFA, must be used to assist only non-elderly disabled families. (See the SUMMARY section at the beginning of this NOFA regarding the possibility of substantially more Mainstream Program funding beyond the approximately $48.5 million announced in this NOFA as having already been obligated to fund previously unfunded FY 1998 applications.)

(D) *Mainstream Program Operating Plan.* The application must include a description of an adequate plan for operating a program to serve eligible non-elderly disabled families, including:

(1) A description of how the applicant will carry out its responsibilities under 24 CFR 8.28 to assist recipients in locating units with needed accessibility features; and

(2) A description of how the applicant will identify private or public funding sources to help participants cover the costs of modifications that need to be made to their units as reasonable accommodations to their disabilities.

(3) A description of how the applicant will use a non-profit disability organization or PHA (if any) to assist in the administration of the Section 8 Mainstream Program (see paragraph I (D) of this NOFA).

(E) *Certification Applicable to Non-Profit Disability Organizations.* A non-profit disability organization applying for the five-year funding available under this NOFA must provide a certification stating that it can meet the capacity requirements applicable to a non-profit disability organization delineated in the last paragraph of paragraph I (D) of this NOFA. The certification must specifically list the four capacity requirements from that paragraph, and

must specifically list the rental housing programs the nonprofit disability organization has administered or the rental housing the nonprofit disability organization has managed.

Note: *Notice of Repeal of Local Government Comment Requirements.* Local government comments that HUD was previously required to obtain from the unit of general local government on PHA applications for Section 8 rental assistance under Section 213(c) of the Housing and Community Development Act of 1974 are no longer required. Section 551 of the Quality Housing and Work Responsibility Act of 1998 (Pub.L. 105–276, 112 Stat. 2461, approved October 21, 1998) (QHWRA) repealed the provisions of Section 213(c) of the Housing and Community Development Act of 1974. Although section 503 of QHWRA establishes an effective date of October 21, 1999, for its provisions unless otherwise specifically provided, section 503 also permits any QHWRA provision or amendment to be implemented by notice, unless otherwise specifically provided. Accordingly, HUD's Notice of Initial Guidance on the QHWRA, published on February 18, 1999 (64 FR 8192), provided the notice of immediate implementation of section 551 of QHWRA, as permitted by section 503 of QHWRA.

V. Corrections to Deficient Mainstream Program Applications

(A) *Acceptable Applications.* To be eligible for processing, an application must be received by the local HUD Field Office no later than the date and time specified in this NOFA. The local HUD Field Office will initially screen all applications and notify PHAs of technical deficiencies by letter.

If an application has technical deficiencies, the applicant will have 14 calendar days from the date of the issuance of the HUD notification letter to submit the missing or corrected information to the local HUD Field Office before the application can be considered for further processing by HUD. Curable technical deficiencies relate only to items that do not improve the substantive quality of the application.

All applicants must submit corrections within 14 calendar days from the date of the HUD letter notifying the applicant of any such deficiency. Information received by the local HUD Field Office after 3 p.m. local HUD Field Office time on the 14th calendar day of the correction period will not be accepted and the application will be rejected as incomplete.

(B) *Unacceptable Applications.* (1) After the 14-calendar day technical deficiency correction period, the local HUD Field Office will disapprove all applications that it determines are not acceptable for processing. The local HUD Field Office's notification of rejection letter must state the basis for the decision.

(2) Applications that fall into any of the following categories will not be processed:

(a) Applications that do not meet the requirements of Section II(A)(1) of this NOFA, Compliance With Fair Housing and Civil Rights Laws.

(b) The PHA has serious unaddressed, outstanding Inspector General audit findings, HUD management review findings, or Independent Public Accountant (IPA) findings for its rental voucher or rental certificate programs; or the PHA has failed to achieve a lease-up rate of 90 percent of units in its HUD-approved budget for the PHA fiscal year prior to application for funding in each of its rental voucher and certificate programs (excluding the impact of the three-month statutory delay requirement effective in FY 1997 and 1998 for the reissuance of rental vouchers and certificates). The only exception to this category is if the PHA has been identified under the policy established in Section I.(D) of this NOFA and the PHA makes application with a designated contract administrator.

(c) The PHA or non-profit disability organization is involved in litigation and HUD determines that the litigation may seriously impede the ability of the PHA or non-profit disability organization to administer the rental vouchers.

(d) An application that does not comply with the requirements of 24 CFR 982.102 and this NOFA after the expiration of the 14-calendar day technical deficiency correction period will be rejected from processing.

(e) The application was submitted after the application due date.

VI. Findings and Certifications

(A) *Paperwork Reduction Act Statement.* The Section 8 information collection requirements contained in this NOFA have been approved by the Office of Management and Budget in accordance with the Paperwork Reduction Act of 1995 (44 U.S.C. 3501–3520), and assigned OMB control number 2577–0169. An agency may not conduct or sponsor, and a person is not required to respond to, a collection of information unless the collection displays a valid control number.

(B) *Environmental Impact.* In accordance with 24 CFR 50.19(b)(11) of the HUD regulations, tenant-based activities assisted under this program are categorically excluded from the requirements of the National Environmental Policy Act and are not subject to environmental review under the related laws and authorities. In accordance with 24 CFR 50.19(c)(5)(ii), the approval for issuance of this NOFA is categorically excluded from environmental review under the National Environmental Policy Act of 1969 (42 U.S.C. 4321).

(C) *Catalog of Federal Domestic Assistance Numbers.* The Federal Domestic Assistance number for this program is: 14.857.

(D) *Federalism Impact.* The General Counsel, as the Designated Official under section 6(a) of Executive Order 12612, Federalism, has determined that the policies contained in this NOFA will not have substantial direct effects on States or their political subdivisions, or the relationship between the Federal Government and the States, or on the distribution of power and responsibilities among the various levels of government. As a result, the notice is not subject to review under the Order. This notice is a funding notice and does not substantially alter the established roles of HUD, the States, and local governments, including PHAs.

(E) *Accountability in the Provision of HUD Assistance.* Section 102 of the Department of Housing and Urban Development Reform Act of 1989 (HUD Reform Act) and the regulations in 24 CFR part 4, subpart A contain a number of provisions that are designed to ensure greater accountability and integrity in the provision of certain types of assistance administered by HUD. On January 14, 1992 (57 FR 1942), HUD published a notice that also provides information on the implementation of section 102. HUD will comply with the documentation, public access, and disclosure requirements of section 102 with regard to the assistance awarded under this NOFA, as follows:

(1) *Documentation and public access requirements.* HUD will ensure that documentation and other information regarding each application submitted pursuant to this NOFA are sufficient to indicate the basis upon which assistance was provided or denied. This material, including any letters of support, will be made available for public inspection for a 5-year period beginning not less than 30 days after the award of the assistance. Material will be made available in accordance with the Freedom of Information Act (5 U.S.C. 552) and HUD's implementing regulations at 24 CFR part 15. In addition, HUD will include the recipients of assistance pursuant to this NOFA in its **Federal Register** notice of all recipients of HUD assistance awarded on a competitive basis.

(2) *Disclosures.* HUD will make available to the public for 5 years all applicant disclosure reports (HUD Form 2880) submitted in connection with this NOFA. Update reports (also Form 2880) will be made available along with the applicant disclosure reports, but in no case for a period less than 3 years. All reports—both applicant disclosures and updates—will be made available in accordance with the Freedom of Information Act (5 U.S.C. 552) and HUD's implementing regulations at 24 CFR part 15.

(F) *Section 103 HUD Reform Act.* HUD will comply with section 103 of the Department of Housing and Urban Development Reform Act of 1989 and HUD's implementing regulations in subpart B of 24 CFR part 4 with regard to the funding competition announced today. These requirements continue to apply until the announcement of the selection of successful applicants. HUD employees involved in the review of applications and in the making of funding decisions are limited by section 103 from providing advance information to any person (other than an authorized employee of HUD) concerning funding decisions, or from otherwise giving any applicant an unfair competitive advantage. Persons who apply for assistance in this competition should confine their inquiries to the subject areas permitted under section 103 and subpart B of 24 CFR part 4.

Applicants or employees who have ethics related questions should contact the HUD Office of Ethics (202) 708–3815. (This is not a toll-free number.) For HUD employees who have specific program questions, such as whether particular subject matter can be discussed with persons outside HUD, the employee should contact the appropriate Field Office Counsel.

(G) *Prohibition Against Lobbying Activities.* Applicants for funding under this NOFA are subject to the provisions of section 319 of the Department of Interior and Related Agencies Appropriation Act for Fiscal Year 1991 (31 U.S.C. 1352) (the Byrd Amendment) and to the provisions of the Lobbying Disclosure Act of 1995 (Pub. L. 104–65; approved December 19, 1995).

The Byrd Amendment, which is implemented in regulations at 24 CFR part 87, prohibits applicants for Federal contracts and grants from using appropriated funds to attempt to influence Federal executive or legislative officers or employees in connection with obtaining such assistance, or with its extension, continuation, renewal, amendment, or modification. The Byrd Amendment applies to the funds that are the subject of this NOFA. Therefore, applicants must file a certification stating that they have not made and will not make any prohibited payments and, if any payments or agreement to make payments of nonappropriated funds for these purposes have been made, a form SF–LLL disclosing such payments must be submitted. The certification and the SF–LLL are included in the application.

The Lobbying Disclosure Act of 1995 (Pub. L. 104–65; approved December 19, 1995), which repealed section 112 of the HUD Reform Act, requires all persons and entities who lobby covered executive or legislative branch officials to register with the Secretary of the Senate and the Clerk of the House of Representatives and file reports concerning their lobbying activities.

Dated: March 3, 1999.

Deborah Vicent,

General Deputy Assistant, Secretary for Public and Indian Housing

[FR Doc. 99–5577 Filed 3–5–99; 8:45 am]

BILLING CODE 4210–33–P

federal register

Monday
March 8, 1999

Part XII

Department of Housing and Urban Development

Rental Assistance for Non-Elderly Persons With Disabilities Related to Certain Types of Section 8 Project-Based Developments and Sections 202, 221(d)(3), and 236 Developments Funding Availability for Fiscal Year 1999; Notice

DEPARTMENT OF HOUSING AND URBAN DEVELOPMENT

[Docket No. FR–4413–N–O1]

Fiscal Year 1999 Notice of Funding Availability; Rental Assistance for Non-Elderly Persons With Disabilities Related to Certain Types of Section 8 Project-Based Developments and Sections 202, 221(d)(3), and 236 Developments

AGENCY: Office of the Assistant Secretary for Public and Indian Housing, HUD.

ACTION: Notice of funding availability (NOFA).

SUMMARY: *Purpose of the Program.* The purpose of this program is to provide Section 8 rental vouchers to non-elderly disabled families who are not currently receiving housing assistance in certain Section 8 project-based developments due to the owners establishing preferences for the admission of elderly families, or in certain types of section 202, section 221(d)(3), or section 236 developments where the owners are restricting occupancy in the developments (or portions thereof) to elderly families. The rental vouchers will enable non-elderly disabled families to rent affordable housing.

Available Funds. Approximately $20 million in one-year budget authority for approximately 4,200 Section 8 rental vouchers.

Eligible Applicants. Public housing agencies (PHAs). Indian Housing Authorities, Indian tribes and their tribally designated housing entities are not eligible.

Application Deadline. June 30, 1999.

Match. None

Additional Information

If you are interested in applying for funding under this program, please read the balance of this NOFA which will provide you with detailed information regarding the submission of an application, Section 8 program requirements, the application selection process to be used by HUD in selecting applications for funding, and other valuable information relative to a PHA's application submission and participation in the program covered by this NOFA.

Application Due Date and Application Submission

Delivered Applications. The application deadline for delivered applications under this NOFA is June 30, 1999, 6:00 p.m., local HUD Field Office HUB or local HUD Field Office Program Center time.

This application deadline is firm as to date and hour. In the interest of fairness to all competing PHAs, HUD will not consider any application that is received after the application deadline. Applicants should take this practice into account and make early submission of their materials to avoid any risk of loss of eligibility brought about by unanticipated delays or other delivery-related problems. HUD will not accept, at any time during the NOFA competition, application materials sent via facsimile (FAX) transmission.

Mailed Applications. Applications will be considered timely filed if postmarked before midnight on the application due date and received within ten (10) days of that date.

Applications Sent by Overnight Delivery. Overnight delivery items will be considered timely filed if received before or on the application due date, or upon submission of documentary evidence that they were placed in transit with the overnight delivery service by no later than the specified application due date.

Official Place of Application Receipt. The original and a copy of the application should be submitted to the local HUD Field Office HUB, Attention: Director, Office of Public Housing, or to the local HUD Field Office Program Center, Attention: Program Center Coordinator. The local HUD Field Office is the official place of receipt for all applications in response to this NOFA. For ease of reference, the term ''local HUD Field Office'' will be used throughout this NOFA to mean the local HUD Field Office HUB and local HUD Field Office Program Center.

Application Kit, Further Information and Technical Assistance

For Application Kit. An application kit is not available and is not necessary for submitting an application for funding under this NOFA.

For Further Information. For answers to your questions, you have two options. You may contact the local HUD Field Office, or you may contact George C. Hendrickson, Housing Program Specialist, Room 4216, Office of Public and Assisted Housing Delivery, Department of Housing and Urban Development, Room 4216, 451 Seventh Street, SW, Washington, DC 20410; Telephone (202) 708–1872, ext. 4064. (This is not a toll-free number.) Persons with hearing or speech impairments may access this number via TTY (text telephone) by calling the Federal Information Relay Service at 1–800–877–8339 (this is a toll-free number).

For Technical Assistance. Prior to the application due date, George C. Hendrickson of HUD's Headquarters staff (at the address and telephone number indicated above) will be available to provide general guidance and technical assistance about this NOFA. Current law does not permit HUD staff to assist in preparing the application. Following selection, but prior to award, HUD staff will be available to assist in clarifying or confirming information that is a prerequisite to the offer of an award by HUD.

I. Authority, Purpose, Amount Allocated, and Eligibility

(A) *Authority.* Authority for the approximately $20 million in one-year budget authority for Section 8 rental vouchers for non-elderly disabled families who are not currently receiving housing assistance in certain Section 8 project-based developments due to the owners establishing preferences for the admission of elderly families, and for non-elderly disabled families not being housed in certain section 202, section 221(d)3), and section 236 developments (or portions thereof) where the owners have restricted occupancy to elderly families is found in the Departments of Veteran Affairs and Housing and Urban Development, and Independent Agencies Appropriations Act, 1999 (Pub. L. 105–276, approved October 21, 1998), hereinafter referred to as the 1999 Appropriations Act. The 1999 Appropriations Act authorized appropriations for Section 8 rental vouchers to assist non-elderly disabled families affected by the establishment of preferences in accordance with section 651 of the Housing and Community Development Act of 1992, or the restriction of occupancy to elderly families in accordance with section 658 of such Act. The 1999 Appropriations Act also allows the Secretary to transfer any unobligated funds for this purpose to assist non-elderly disabled families to the extent they are not needed under sections 651 and 658 for such families. Accordingly, any funding remaining unobligated under this NOFA will be used first to fund any approvable applications under NOFA FR–4412, Rental Assistance for Non-Elderly Persons With Disabilities in Support of Designated Housing Plans, for which there are insufficient funds. Thereafter, any funds still remaining unobligated under this NOFA will be used to fund any approvable applications under NOFA FR–4415, Mainstream Housing Opportunities for Persons With Disabilities, for which there are insufficient funds.

(1) Section 651 of the Housing and Community Development Act of 1992

(42 U.S.C. 13611 allowed owners of the *following covered Section 8 project-based developments* (limited to only such developments originally designed primarily for occupancy by elderly families) to provide preferences to elderly families in selecting tenants for available assisted units in those projects:

(a) Section 8 New Construction Program, 24 CFR Part 880;

(b) Section 8 Substantial Rehabilitation Program, 24 CFR Part 881;

(c) State Housing Agencies Program (insofar as involving new construction and substantial rehabilitation), 24 CFR Part 883;

(d) New Construction Set-Aside for Section 515 Rural Rental Housing Projects Program, 24 CFR Part 884; and

(e) Section 8 Housing Assistance Program for the Disposition of HUD-Owned Projects (insofar as involving substantial rehabilitation), 24 CFR Part 886, subpart C.

(2) Section 658 of the 1992 Act provides that an owner of a Federally assisted project (or portion thereof) that was designed for occupancy for elderly families may continue to restrict occupancy in such project (or portion) to elderly families in accordance with the rules, standards, and agreements governing occupancy in such housing in effect at the time of the development of the housing. *The three types of assisted housing developments covered by Section 658 are as follows:*

(a) Housing assisted under section 202 of the Housing Act of 1959, as such section existed before the enactment of the National Affordable Housing Act (NAHA);

(b) Housing financed by a loan or mortgage insured under section 221(d)(3) of the National Housing Act that bears an interest rate determined under section 221(d)(5); and

(c) Housing insured, assisted or held by the Secretary or a State or State Agency under section 236 of the National Housing Act.

(B) *Purpose.* The purpose of the Section 8 rental voucher funding being made available under this NOFA is to provide housing assistance to non-elderly disabled families who are not being housed in certain types of Section 8 project-based developments due to the establishment of preferences for elderly admissions by the owners, or are not being housed in certain section 202, section 221(d)(3), or section 236 developments due to the owners having restricted occupancy to elderly families. In prior fiscal years HUD provided funding for rental vouchers and certificates for these purposes; however, in FY 1999 HUD will be providing rental vouchers only. This is due to provisions in the Quality Housing and Work Responsibility Act of 1998 that call for the merging of the Section 8 rental voucher and certificate programs into a rental voucher program. HUD intends to publish an interim rule in the spring of FY 1999 to implement the new rental voucher program. Since successful applicants under this NOFA in FY 1999 will not be funded until after the implementation of the interim rule, rental vouchers only will be provided this year under this NOFA.

(C) *Amount Allocated.* This NOFA announces the availability of approximately $20 million in one-year budget authority which will provide assistance to approximately 4,200 non-elderly disabled families. A PHA may apply only for the number of units needed to house:

(1) Those non-elderly disabled families who are on the waiting list of an owner of a Section 8 project-based development identified above in paragraph I.(A)(1) where the owner elected to provide preferences to elderly families and to house other non-elderly disabled families residing in the community who would qualify for one- or zero-bedroom units; or

(2) Those non-elderly disabled families who are on the waiting list of, or are otherwise residing in the community, but in either instance are not being housed in certain assisted housing developments listed above in paragraph I.(A)(2) where the owners have restricted occupancy in the developments (or portion thereof) to elderly. Non-elderly disabled families in this second category would also need to qualify for one- or zero bedroom units.

PHAs are limited to applying for no more than 200 units. An eligible PHA may apply for a maximum of 200 rental vouchers.

In the event approvable applications are received for more than the approximately $20 million announced as available under this NOFA, funds will be transferred from the approximately $20 million available under NOFA FR–4412 for non-elderly disabled families related to designated housing plans, to the extent funds remain unobligated after funding all approvable applications under that NOFA.

(D) *Eligible Applicants.* A PHA established pursuant to State law may apply for funding under this NOFA. A regional (multi-county) or State PHA is eligible to apply for funding. Indian Housing Authorities, Indian tribes and their tribally designated housing entities are no longer eligible for new increments of Section 8 funding.

Some PHAs currently administering the Section 8 rental voucher and certificate programs have, at the time of publication of this NOFA, major program management findings from Inspector General audits, HUD management reviews, or independent public accountant (IPA) audits that are open and unresolved or other significant program compliance problems (e.g., PHA has not implemented mandatory Family Self-Sufficiency (FSS) Program). HUD will not accept applications for additional funding from these PHAs as contract administrators if, on the application due date, the findings are not closed to HUD's satisfaction. If the PHA wants to apply for funding under this NOFA, the PHA must submit an application that designates another housing agency, nonprofit agency, or contractor, that is acceptable to HUD. The PHA's application must include an agreement by the other housing agency, nonprofit agency, or contractor to administer the new funding increment on behalf of the PHA, and a statement that outlines the steps the PHA is taking to resolve the program findings. Immediately after the publication of this NOFA, the local HUD Field Office will notify, in writing, those PHAs that are not eligible to apply without such an agreement. The PHA may appeal the decision, if HUD has mistakenly classified the PHA as having outstanding management or compliance problems. Any appeal must be accompanied by conclusive evidence of HUD's error and must be received prior to the application deadline.

(E) *Eligible Participants.* Eligible participants include non-elderly disabled families who were on the waiting list (at the time of the PHA's application) of a covered development listed in paragraphs I.(A)(1) and (2) above where the owner had exercised a preference for the admission of elderly families, or restricted occupancy to elderly families, respectively, at the time the PHA received the names of these families from the owner of the development(s) for purposes of requesting Section 8 rental vouchers in response to this NOFA. These non-elderly disabled families need not be listed on the PHA's Section 8 waiting list in order to be offered and receive Section 8 rental assistance; i.e., it is sufficient that their names are on the waiting list for a covered development at the time their names are provided to the PHA by the owner. Eligible participants also include other non-elderly disabled families residing in the community who would qualify for a

one- or zero-bedroom unit. Non-elderly disabled families must be income eligible under 24 CFR 982.201(b) in order to receive a rental voucher.

II. Program Requirements and Definitions

(A) *Program Requirements.* (1) *Compliance With Fair Housing and Civil Rights Laws.* All applicants must comply with all fair housing and civil rights laws, statutes, regulations, and executive orders as enumerated in 24 CFR 5.105(a). If an applicant: (a) has been charged with a systemic violation of the Fair Housing Act by the Secretary alleging ongoing discrimination; (b) is the defendant in a Fair Housing Act lawsuit filed by the Department of Justice alleging an ongoing pattern or practice of discrimination; or (c) has received a letter of noncompliance findings under Title VI of the Civil Rights Act of 1964, section 504 of the Rehabilitation Act of 1973, or section 109 of the Housing and Community Development Act of 1974, the applicant's application will not be evaluated under this NOFA if, prior to the application deadline, the charge, lawsuit, or letter of findings has not been resolved to the satisfaction of the Department. HUD's decision regarding whether a charge, lawsuit, or a letter of findings has been satisfactorily resolved will be based upon whether appropriate actions have been taken necessary to address allegations of ongoing discrimination in the policies or practices involved in the charge, lawsuit, or letter of findings.

(2) *Additional Nondiscrimination Requirements.* Applicants must comply with the Americans with Disabilities Act, and Title IX of the Education Amendments Act of 1972. In addition to compliance with the civil rights requirements listed at 24 CFR 5.105, each successful applicant must comply with the nondiscrimination in employment requirements of Title VII of the Civil Rights Act of 1964 (42 U.S.C. 2000e *et seq.*), the Equal Pay Act (29 U.S.C. 206(d)), the Age Discrimination in Employment Act of 1967 (29 U.S.C. 621 *et seq.*), and Titles I and V of the Americans with Disabilities Act (42 U.S.C. 12101 *et seq.*).

(3) *Affirmatively Furthering Fair Housing.* Each successful applicant will have a duty to affirmatively further fair housing. Applicants will be required to identify the specific steps that they will take to:

(a) Address the elimination of impediments to fair housing that were identified in the jurisdiction's Analysis of Impediments (AI) to Fair Housing Choice;

(b) Remedy discrimination in housing; or

(c) Promote fair housing rights and fair housing choice. Further, applicants have a duty to carry out the specific activities cited in their responses to address affirmatively furthering fair housing under this NOFA.

(4) *Certifications and Assurances.* Each applicant is required to submit signed copies of Assurances and Certifications. The standard Assurances and Certifications are on Form HUD–52515, Funding Application, which includes the Equal Opportunity Certification, Certification Regarding Lobbying, and Certification Regarding Drug-Free Workplace Requirements.

(5) *Rental Voucher Assistance Requirements.*

(a) *Section 8 Regulations.* PHAs must administer the Section 8 rental vouchers received under this NOFA in accordance with HUD regulations and requirements governing the Section 8 rental voucher program.

(b) *Section 8 Admission Requirements.* Section 8 assistance must be provided to eligible applicants in conformity with regulations and requirements governing the Section 8 rental voucher program and the PHA's administrative plan.

(c) *Turnover.* When a rental voucher under this NOFA becomes available for reissue (e.g., the family initially selected for the program drops out of the program or is unsuccessful in the search for a unit), the rental assistance may be used only for another individual or family eligible for assistance under this NOFA, subject to appropriations for renewal funding, from the date the rental assistance is placed under an annual contributions contract (ACC).

(d) *PHA Responsibilities.* In addition to PHA responsibilities under the Section 8 rental voucher program and HUD regulations concerning nondiscrimination based on disability (24 CFR 8.28) and to affirmatively further fair housing, PHAs that receive rental voucher funding shall:

(i) Where requested by an individual, assist program participants to gain access to supportive services available within the community, but not require eligible applicants or participants to accept supportive services as a condition of participation or continued occupancy in the program.

(ii) Identify public and private funding sources to assist participants in covering the costs of modifications that need to be made to their units as a reasonable accommodation for their disabilities.

(iii) Not deny persons who qualify for rental assistance under this program other housing opportunities, or otherwise restrict access to PHA programs to eligible applicants who choose not to participate.

(iv) Provide Section 8 search assistance.

(v) In accordance with regulatory guidance, provide higher rents to owners necessary for the provision of accessible units and structural modifications for persons with disabilities.

(vi) Provide technical assistance to owners for making reasonable accommodations or making units accessible to persons with disabilities.

(B) *Definitions.* (1) *Elderly Family.* A family whose head of household, spouse, or sole member is 62 years or older.

(2) *Non-Elderly Disabled Family.* A family who is not elderly, and whose head, spouse, or sole member is a person with disabilities. The term ''non-elderly disabled family'' may include two or more such persons with disabilities living together, and one or more such persons with disabilities living with one or more persons who are determined essential to the care and well-being of the person or persons with disabilities (live-in aides).

(3) *Person With Disabilities.* A person who—

(a) Has a disability as defined in section 223 of the Social Security Act (42 U.S.C. 423), or

(b) Is determined to have a physical, mental or emotional impairment that:

(i) Is expected to be of long-continued and indefinite duration;

(ii) Substantially impedes his or her ability to live independently; and

(iii) Is of such a nature that such ability could be improved by more suitable housing conditions, or

(c) Has a developmental disability as defined in section 102 of the Developmental Disabilities Assistance and Bill of Rights Act (42 U.S.C. 6001(5)).

The term ''person with disabilities'' does not exclude persons who have the disease of acquired immunodeficiency syndrome (AIDS) or any conditions arising from the etiologic agent for acquired immunodeficiency syndrome (HIV).

Note: While the above definition of a ''person with disabilities'' is to be used for purposes of determining a family's eligibility for a Section 8 rental voucher under this NOFA, the definition of a person with disabilities contained in section 504 of the Rehabilitation Act of 1973 and its implementing regulations must be used for purposes of meeting the requirements of Fair Housing laws, including providing reasonable accommodations.

(4) *Section 8 Search Assistance.* Assistance to increase access by program participants to housing units in a variety of neighborhoods (including areas with low poverty concentrations) and to locate and obtain units suited to their needs.

III. Application Selection Process

After the local HUD Field Office has screened PHA applications and disapproved any applications found unacceptable for further processing, the local HUD Field Office will review all acceptable applications to ensure that they are technically adequate and responsive to the requirements of the NOFA. The local HUD Field Office will send to the Grants Management Center, Attention: Michael Diggs, Director, 501 School Street, SW, Suite 800, Washington, DC 20024, (tel. 202–358–0273), the following information on each application that is found technically adequate and responsive:

(1) Name and address of the PHA;

(2) Date and time of the local HUD Field Office's receipt of the PHA's application;

(3) Local HUD Field Office contact person and telephone number;

(4) The number of rental vouchers in the PHA application, and the minimum number of rental vouchers acceptable to the PHA; and

(5) A completed fund reservation worksheet, indicating the number of Section 8 rental vouchers requested in the PHA application and recommended for approval by the local HUD Field Office, and the corresponding one-year budget authority.

The Grants Management Center will fund all approvable applications from PHAs that are recommended for funding by the local HUD Field Office based upon the date and time the application is received in the local HUD Field Office. As PHAs are selected, the cost of funding the applications will be subtracted from the funds available. In the event approvable applications are received for more than the approximately $20 million announced as available under this NOFA, funds will be transferred from the approximately $20 million available under NOFA FR–4412 for non-elderly disabled families related to designated housing allocation plans, to the extent such funds have not been obligated under that NOFA for approvable applications. Applications will be funded for the total number of units requested by the PHA and recommended for approval by the local HUD Field Office in accordance with this NOFA. When remaining budget authority is insufficient to fund the last selected PHA application in full, however, the Grants Management Center will fund that application to the extent of the funding available, unless the PHA's application indicates it will only accept a higher number of units. In that event, the next selected application shall be one that has indicated a willingness to accept the lesser amount of funding for units available.

IV. Application Submission Requirements

(A) *Form HUD–52515.* All PHAs must complete and submit form HUD–52515, Funding Application, for the Section 8 rental voucher program (dated January 1996). This form includes all necessary certifications for Fair Housing, Drug Free Workplace and Lobbying Activities. An application must include the information in Section (C), Average Monthly Adjusted Income, of form HUD–52515 in order for HUD to calculate the amount of Section 8 budget authority necessary to fund the requested number of units. Copies of form HUD–52515 may be obtained from the local HUD Field Office or may be downloaded from the HUD Home Page site on the Internet's world wide web (http://www.hud.gov).

(B) *Letter of Intent and Narrative.* All the items in this section must be included in the application submitted to the local HUD Field Office. The PHA must state in its cover letter to the application whether it will accept a reduction in the number of rental vouchers, and the minimum number of rental vouchers it will accept, since the funding is limited and HUD may only have enough funds to approve a smaller amount than the number of rental vouchers requested. The maximum number of rental vouchers that a PHA may apply for under this NOFA is limited to 200.

(C) *Certification, Waiting List Information and Other Non-Elderly Disabled Families Residing in the Community.* In order to support the requested number of rental vouchers being requested on the form HUD–52515, the PHA's application must include a certification from the owner of a covered development (see paragraph I. (A)(1) and (2) which lists the different types of covered developments), stating the specific type of covered development, preferences are provided to elderly families in selecting tenants (Section 8 project-based developments) or occupancy in the development is restricted to elderly families (assisted housing developments), and the number of non-elderly disabled families on the owner's waiting list for the development(s). PHAs may contact the local HUD Field Office's Director, Multifamily Division, to get the addresses and telephone numbers of the developments falling under the programs listed in paragraph I. (A)(1) and (2) above. The PHA will then need to contact the management/owners of these developments within their jurisdiction to verify that the development is a covered development.

Owners of covered developments are encouraged to cooperate with PHAs and provide the required certification (if applicable) in a timely manner. An owner should also concurrently provide the PHA with the names, addresses and telephone numbers of those families on the development's waiting list that are non-elderly disabled families.

PHAs must also submit information supportive of the number of other non-elderly disabled families residing in the community who would qualify for one-bedroom or zero-bedroom units (not on the waiting lists of covered developments). The application must demonstrate a need for rental vouchers by providing information documenting that the demand for housing for non-elderly disabled families would equal or exceed the requested number of rental vouchers (not to exceed 200). The PHA must assess and document the need using a range of sources including, but not limited to: census data, information from the PHA's waiting list (both public housing and Section 8), statistics on recent public housing admissions and rental certificate and voucher use, data from local advocacy groups and local public and private service agencies familiar with the housing needs of non-elderly disabled families, and pertinent information from the Consolidated Plan applicable to the PHA's jurisdiction. (See 24 CFR 91.205(d).

Note: Notice of Repeal of Local Government Comment Requirements. Local government comments that HUD was previously required to obtain from the unit of general local government on PHA applications for Section 8 rental assistance under Section 213(c) of the Housing and Community Development Act of 1974 are no longer required. Section 551 of the Quality Housing and Work Responsibility Act of 1998 (Pub.L. 105–276, 112 Stat. 2461, approved October 21, 1998) (QHWRA) repealed the provisions of Section 213(c) of the Housing and Community Development Act of 1974. Although section 503 of QHWRA establishes an effective date of October 21, 1999, for its provisions unless otherwise specifically provided, section 503 also permits any QHWRA provision or amendment to be implemented by notice, unless otherwise specifically provided. Accordingly, HUD's Notice of Initial Guidance on the QHWRA, published on February 18, 1999 (64 FR 8192), provided the notice of immediate implementation of

section 551 of QHWRA, as permitted by section 503 of QHWRA.

V. Corrections to Deficient Applications

(A) *Acceptable Applications.* To be eligible for processing, an application must be received by the Local HUD Field Office no later than the date and time specified in this NOFA. The local HUD Field Office will initially screen all applications and notify PHAs of technical deficiencies by letter.

If an application has technical deficiencies, the PHA will have 14 calendar days from the date of the issuance of the local HUD Field Office's notification letter to submit the missing or corrected information to the local HUD Field Office before the application can be considered for further processing by HUD. Curable technical deficiencies relate only to items that do not improve the substantive quality of the application.

All PHAs must submit corrections within 14 calendar days from the date of the local HUD Field Office's letter notifying the applicant of any such deficiency. Information received by the local HUD Field Office after 3 p.m. local HUD Field Office time on the 14th calendar day of the correction period will not be accepted and the application will be rejected as incomplete.

(B) *Unacceptable Applications* (1) After the 14-calendar day technical deficiency correction period, the local HUD Field Office will disapprove all PHA applications that it determines are not acceptable for processing. The local HUD Field Office's notification of rejection letter must state the basis for the decision.

(2) Applications from PHAs that fall into any of the following categories will not be processed:

(a) Applications from PHAs that do not meet the requirements of Section II(A)(1) of this NOFA, Compliance With Fair Housing and Civil Rights Laws.

(b) The PHA has serious unaddressed, outstanding Inspector General audit findings, HUD management review findings, or independent public accountant (IPA) findings for its rental voucher or rental certificate programs; or the PHA has failed to achieve a lease-up rate of 90 percent of units in its HUD-approved budget for the PHA fiscal year prior to application for funding in each of its rental voucher and certificate programs (excluding the impact of the three-month statutory delay requirement effective in FY 1997 and 1998 for the reissuance of rental vouchers or certificates). The only exception to this category is if the PHA has been identified under the policy established in Section I.(D) of this NOFA and the PHA makes application with a designated contract administrator.

(c) The PHA is involved in litigation and HUD determines that the litigation may seriously impede the ability of the PHA to administer the rental vouchers.

(d) A PHA's application that does not comply with the requirements of 24 CFR 982.102 and this NOFA after the expiration of the 14-calendar day technical deficiency correction period will be rejected from processing.

(e) The PHA's application was submitted after the application due date.

VI. Findings and Certifications

(A) *Paperwork Reduction Act Statement.* The Section 8 information collection requirements contained in this NOFA have been approved by the Office of Management and Budget in accordance with the Paperwork Reduction Act of 1995 (44 U.S.C. 3501–3520), and assigned OMB control number 2577–0169. An agency may not conduct or sponsor, and a person is not required to respond to, a collection of information unless the collection displays a valid control number.

(B) *Environmental Impact.* In accordance with 24 CFR 50.19(b)(11) of the HUD regulations, tenant-based activities assisted under this program are categorically excluded from the requirements of the National Environmental Policy Act and are not subject to environmental review under the related laws and authorities. In accordance with 24 CFR 50.19(c)(5)(ii), the approval for issuance of this NOFA is categorically excluded from environmental review under the National Environmental Policy Act of 1969 (42 U.S.C. 4321).

(C) *Catalog of Federal Domestic Assistance Numbers.* The Federal Domestic Assistance number for this program is 14.857.

(D) *Federalism Impact.* The General Counsel, as the Designated Official under section 6(a) of Executive Order 12612, Federalism, has determined that the policies contained in this NOFA will not have substantial direct effects on States or their political subdivisions, or the relationship between the Federal Government and the States, or on the distribution of power and responsibilities among the various levels of government. As a result, the notice is not subject to review under the Order. This notice is a funding notice and does not substantially alter the established roles of HUD, the States, and local governments, including PHAs.

(E) *Accountability in the Provision of HUD Assistance.* Section 102 of the Department of Housing and Urban Development Reform Act of 1989 (HUD Reform Act) and the regulations in 24 CFR part 4, subpart A contain a number of provisions that are designed to ensure greater accountability and integrity in the provision of certain types of assistance administered by HUD. On January 14, 1992 (57 FR 1942), HUD published a notice that also provides information on the implementation of section 102. HUD will comply with the documentation, public access, and disclosure requirements of section 102 with regard to the assistance awarded under this NOFA, as follows:

(1) *Documentation and public access requirements.* HUD will ensure that documentation and other information regarding each application submitted pursuant to this NOFA are sufficient to indicate the basis upon which assistance was provided or denied. This material, including any letters of support, will be made available for public inspection for a 5-year period beginning not less than 30 days after the award of the assistance. Material will be made available in accordance with the Freedom of Information Act (5 U.S.C. 552) and HUD's implementing regulations at 24 CFR part 15. In addition, HUD will include the recipients of assistance pursuant to this NOFA in its **Federal Register** notice of all recipients of HUD assistance awarded on a competitive basis.

(2) *Disclosures.* HUD will make available to the public for 5 years all applicant disclosure reports (HUD Form 2880) submitted in connection with this NOFA. Update reports (also Form 2880) will be made available along with the applicant disclosure reports, but in no case for a period less than 3 years. All reports—both applicant disclosures and updates—will be made available in accordance with the Freedom of Information Act (5 U.S.C. 552) and HUD's implementing regulations at 24 CFR part 15.

(F) *Section 103 HUD Reform Act.* HUD will comply with section 103 of the Department of Housing and Urban Development Reform Act of 1989 and HUD's implementing regulations in subpart B of 24 CFR part 4 with regard to the funding competition announced today. These requirements continue to apply until the announcement of the selection of successful applicants. HUD employees involved in the review of applications and in the making of funding decisions are limited by section 103 from providing advance information to any person (other than an authorized employee of HUD) concerning funding decisions, or from otherwise giving any applicant an unfair competitive advantage. Persons who apply for

assistance in this competition should confine their inquiries to the subject areas permitted under section 103 and subpart B of 24 CFR part 4.

Applicants or employees who have ethics related questions should contact the HUD Office of Ethics (202) 708–3815. (This is not a toll-free number.) For HUD employees who have specific program questions, such as whether particular subject matter can be discussed with persons outside HUD, the employee should contact the appropriate Field Office Counsel.

(G) *Prohibition Against Lobbying Activities.* Applicants for funding under this NOFA are subject to the provisions of section 319 of the Department of Interior and Related Agencies Appropriation Act for Fiscal Year 1991 (31 U.S.C. 1352) (the Byrd Amendment) and to the provisions of the Lobbying Disclosure Act of 1995 (Pub. L. 104–65; approved December 19, 1995).

The Byrd Amendment, which is implemented in regulations at 24 CFR part 87, prohibits applicants for Federal contracts and grants from using appropriated funds to attempt to influence Federal executive or legislative officers or employees in connection with obtaining such assistance, or with its extension, continuation, renewal, amendment, or modification. The Byrd Amendment applies to the funds that are the subject of this NOFA. Therefore, applicants must file a certification stating that they have not made and will not make any prohibited payments and, if any payments or agreement to make payments of nonappropriated funds for these purposes have been made, a form SF–LLL disclosing such payments must be submitted. The certification and the SF–LLL are included in the application.

The Lobbying Disclosure Act of 1995 (Pub. L. 104–65; approved December 19, 1995), which repealed section 112 of the HUD Reform Act, requires all persons and entities who lobby covered executive or legislative branch officials to register with the Secretary of the Senate and the Clerk of the House of Representatives and file reports concerning their lobbying activities.

Dated: March 2, 1999.

Harold Lucas,

Assistant Secretary for Public and Indian Housing.

[FR Doc. 99–5578 Filed 3–5–99; 8:45 am]

BILLING CODE 4210–33–P

federal register

Monday
March 8, 1999

Part XIII

The President

Presidential Determination No. 99–15 of February 26, 1999—Certification for Major Illicit Drug Producing and Drug Transit Countries

Federal Register
Vol. 64, No. 44
Monday, March 8, 1999

Presidential Documents

Title 3—

The President

Presidential Determination No. 99–15 of February 26, 1999

Certification for Major Illicit Drug Producing and Drug Transit Countries

Memorandum for the Secretary of State

By virtue of the authority vested in me by section 490(b)(1)(A) of the Foreign Assistance Act of 1961, as amended (''the Act''), I hereby determine and certify that the following major illicit drug producing and/or major illicit drug transit countries/dependent territories have cooperated fully with the United States, or have taken adequate steps on their own, to achieve full compliance with the goals and objectives of the 1988 United Nations Convention Against Illicit Traffic in Narcotic Drugs and Psychotropic Substances:

Aruba, The Bahamas, Belize, Bolivia, Brazil, China, Colombia, Dominican Republic, Ecuador, Guatemala, Hong Kong, India, Jamaica, Laos, Mexico, Pakistan, Panama, Peru, Taiwan, Thailand, Venezuela, and Vietnam.

By virtue of the authority vested in me by section 490(b)(1)(B) of the Act, I hereby determine that it is in the vital national interests of the United States to certify the following major illicit drug producing and/or major illicit drug transit countries:

Cambodia, Haiti, Nigeria, and Paraguay.

Analysis of the relevant U.S. vital national interests, as required under section 490(b)(3) of the Act, is attached.

I have determined that the following major illicit drug producing and/or major illicit drug transit countries do not meet the standards set forth in section 490(b) for certification:

Afghanistan, Burma.

In making these determinations, I have considered the factors set forth in section 490 of the Act. Given that the performance of each of these countries/dependent territories has differed, I have attached an explanatory statement for each of the countries/dependent territories subject to this determination.

You are hereby authorized and directed to report this determination to the Congress immediately and to publish it in the **Federal Register.**

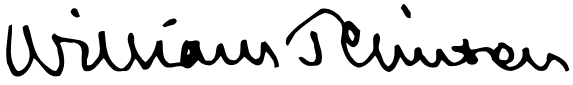

THE WHITE HOUSE,
Washington, February 26, 1999.

STATEMENTS OF EXPLANATION

Afghanistan

According to U.S. Government (USG) estimates, Afghanistan continued to be the world's second largest producer of opium poppy in 1998. Poppy cultivation and opium gum production increased by seven percent in 1998, despite poor weather, resulting in an estimated 1,350 metric tons (mts) of opium gum production. Afghanistan is a party to the 1988 UN Drug Convention, but neither of the warring political factions (Taliban nor Northern Alliance) took steps to demonstrate that they take Afghanistan's obligations under the Convention seriously. Aside from Taliban authorities burning a reported one ton of opiates in Jalalabad in June, there is no evidence to indicate that any action was taken by any faction to discourage poppy cultivation, destroy morphine or heroin laboratories, or arrest and prosecute narcotics traffickers. Numerous reports indicated that members of all factions at all levels continued to profit from the drug trade. UN Drug Control Program (UNDCP) initiatives made very slow progress, while a USG-funded non-governmental organization (NGO) program achieved many of its alternative development goals.

By the end of the year, the Taliban faction controlled over 80 percent of Afghan territory and 96 percent of Afghanistan's opium-growing areas. The Taliban's inaction and lack of political will, as well as substantial drug trade involvement on the part of some local Taliban authorities, also impede meaningful counter-narcotics progress.

The Taliban condemned illicit drug cultivation, production, trafficking and use in 1997. However, there is no evidence that Taliban authorities took action in 1998 to decrease poppy cultivation, to arrest and prosecute major narcotics traffickers, to interdict large shipments of illicit drugs or precursor chemicals, or to eliminate opiate processing laboratories anywhere in Afghanistan. Opium is Afghanistan's largest cash crop and, by many estimates, narcotics remain a significant and perhaps the largest source of income. Some Taliban authorities reportedly benefit financially from the trade and provide protection to heroin laboratories. There are numerous reports of drug traffickers operating in Taliban territory with the consent or involvement of some Taliban officials.

In 1998, poppy cultivation increased and spread to new areas. In an unverified policy statement published by the Taliban's High Commission for Drug Control on September 10, 1998, which appears to contradict the Taliban's November 1997 commitment to UNDCP, the Taliban indicated that they would not support a strategy of forced eradication if farmers who benefitted from alternative development failed to comply with the requirement to abandon poppy cultivation.

A USG-sponsored poppy eradication/alternative development program in Helmand Province through Mercy Corps International (MCI), an American NGO, continued this year. It was originally funded in 1997 for $772,000 and expanded in FY 99 to $1.04 million. It is the only poppy reduction project being implemented by an NGO in Afghanistan. MCI accomplished all but one of its objectives during the year. The one objective not accomplished—delivery of fruit trees to farmers—was not met due to rainy weather. The trees were held for the next planting season.

The USG strongly supports the UN Special Mission to Afghanistan and its efforts to achieve peace and facilitate the development of a broad-based government that respects international norms of behavior on narcotics, terrorism and human rights. The Afghan Support Group (ASG) of major donors to Afghanistan met twice during the year. At the meeting in Tokyo in December, the ASG endorsed the principle that counter-narcotics is a cross-cutting issue and should be integrated wherever possible with other programs in Afghanistan. UNDCP agreed to include gender and human rights components in its counter-narcotics programs wherever appropriate.

Denial of certification does not cut off USG counter-narcotics assistance and would thus have minimal effect in terms of implementation of this policy. Continuation of large-scale opium cultivation and trafficking in Afghanistan, plus the failure of the authorities to initiate law enforcement actions, preclude a determination that Afghanistan has taken adequate steps on its own or that it has sufficiently cooperated with USG counter-narcotics efforts to meet the goals and objectives of the 1988 UN Drug Convention, to which Afghanistan is a party.

Aruba

Aruba is a staging area for international narcotics trafficking organizations, which transship cocaine from Colombia, Venezuela, and Suriname to Europe and the United States. Drug traffickers are attracted to Aruba by its key position near the Venezuelan and Colombian coasts, its efficient infrastructure, its excellent air and sea links to South America, Europe, Puerto Rico, and other Caribbean locations, and its reputation for relatively light prison sentences and good prison conditions.

Aruba, the nearby Netherlands Antilles, and the Netherlands comprise the three parts of the Kingdom of the Netherlands. Since 1986, Aruba has had autonomy over its internal affairs and independent decision-making ability in a number of counter-narcotics areas. The Government of the Netherlands (GON) is responsible for the defense and foreign affairs of Aruba, and assists the Government of Aruba (GOA) in its efforts to combat narcotics trafficking. Aruba is a participant in a joint Netherlands-Netherlands Antilles-Aruba Coast Guard, which has anti-drug responsibilities. Although the Netherlands is a party to the 1988 UN Drug Convention, the other two parts of the Kingdom are not covered by the Convention.

In late 1998, Aruba passed an international asset seizure law, the final legislative prerequisite to requesting that the Kingdom of the Netherlands extend the 1988 UN Drug Convention to Aruba. In December, Aruba formally requested that extension, which is expected during 1999.

During 1998, the GOA continued to cooperate fully with the USG on counter-narcotics goals and objectives. Three Aruba nationals believed to be major drug traffickers and money launderers were extradited to the United States and are now awaiting trial. They include two members of the Mansur family, one of the richest and most powerful in Aruba, who are accused of belonging to a large network that laundered some $40 million for Colombian drug traffickers operating in the United States. These extraditions were the first under a 1997 law permitting the extradition of Aruba nationals.

Aruba law enforcement agencies, including the Aruba Police and Customs, have a good working relationship with USG law enforcement agencies. They cooperate with the DEA on joint investigations and with the U.S. Coast Guard on maritime law enforcement searches and interdictions. Joint USG–GOA efforts contributed to an increase in the number of arrests in 1998 of drug couriers transiting Aruba. A proposed U.S.-Kingdom of the Netherlands maritime drug enforcement agreement, pertaining to the Caribbean, is currently under negotiation.

The Bahamas

The Bahamas is a major transit point for South American cocaine and Jamaican marijuana en route to the United States. Very small amounts of cannabis are grown on the islands for domestic consumption. The USG and the Government of the Commonwealth of The Bahamas (GCOB) continue to enjoy a productive and positive counter-drug working relationship. The GCOB places a high priority on combating drug transshipments through its archipelago, and is moving decisively to combat money laundering and other drug-related crimes. The GCOB cooperates very closely with the USG on our combined law enforcement effort, Operation Bahamas and Turks

and Caicos (OPBAT). The Bahamas was the first country to ratify the 1988 UN Drug Convention, and the GCOB continues to take steps to implement its provisions. Following passage of strong anti-money laundering legislation in 1996, Bahamian authorities are closely monitoring bank compliance and investigating suspicious financial transactions.

U.S. and Bahamian law enforcement officials worked very closely throughout the year to respond to notable increases in air and maritime transshipment incidents. The GCOB is strongly emphasizing money laundering and asset forfeiture investigations and prosecutions. The GCOB also continued in 1998 to strengthen its judicial system, with assistance from the USG. However, unreliable jury pools and weaknesses in the drug laws resulted in several major Bahamian drug dealers avoiding conviction in 1998. Despite committed and talented judicial leadership, The Bahamas needs to improve the effectiveness of its court system in securing convictions against major dealers and organizations by strengthening its drug trafficking laws and improving the prosecutorial capabilities of the police prosecutors. The USG will continue to work with the GCOB in this area, both bilaterally and through regional training and assistance projects.

In December 1998, the Royal Bahamas Police Force (RBPF) Drug Enforcement Unit arrested two police officers from the RBPF Drug Canine Unit at Nassau International Airport for allegedly working with a cocaine trafficking ring. The GCOB needs to continue to move decisively against corruption at Bahamian ports of entry.

Belize

Belize remains a significant narcotics transit country. After taking office in August of 1998, the new Government of Belize (GOB) made it clear it takes seriously the problem of drug transit through its territory, including the impact the trafficking activity has on domestic crime. The new government has created a national drug abuse council, which is in the process of creating a comprehensive drug control strategy. The Belize Police Force, the Belize Defense Force and the rapid response force ''Dragon Unit'' will remain important parts of the national drug control strategy. Belize is party to the 1988 UN Drug Convention and the GOB works closely with the USG in the fight against narcotics trafficking and transnational crime.

Upgrading training, professionalism and equipment in the Belize Defense Force continues as the focus of the USG/GOB counter-narcotics program to combat violent crime and drug trafficking. With the completion of training of the money-laundering unit staff, the USG/GOB effort is now focused on building and equipping a Financial Investigations Unit to enforce money-laundering regulations. The GOB is energetic in its unilateral efforts to reduce drug trafficking through its borders and to combat associated crime. It is a strong supporter of regional and cooperative counter-narcotics efforts.

Concern over corruption remains. The dismissals of suspected corrupt police officials in 1998 and the new government's efforts to rid itself of institutional corruption appear to demonstrate the GOB's commitment. Concerns were raised, however, by the government's recent attempt to dismiss the Supreme Court's chief justice over a case with political overtones.

Counter-narcotics efforts in Belize are hampered by lack of manpower, training and equipment. The relatively large expanse of uninhabited territory and the thousands of coastal cays and inland waterways that are used by traffickers as drop-off sites for drugs contribute to the problem. Seizures in 1998 of just under one metric ton of cocaine were significantly lower than in 1997. Slightly more than 200,000 marijuana plants were eradicated.

Boliva

Boliva retains is position as the world's second largest producer of cocaine even though it has less coca under cultivation than either Peru or Colombia.

The cocaine industry in Bolivia is fragmented and dominated by small to mid-level trafficking organizations which manufacture, transport and distribute cocaine base in hundred to multi-hundred kilogram quantities per month. Successful law enforcement efforts to prevent significant quantities of chemicals utilized in processing coca leaf into cocaine base and cocaine hydrochloride (HCL) from being smuggled in from neighboring countries have negatively impacted the quality of cocaine produced, with a resulting decrease in marketability.

In an impressive show of resolve and political will, the Government of Bolivia (GOB) achieved an unprecedented level of coca eradication—a net reduction of 17 percent, and a gross eradication level of 11,621 hectares. Significant successes in increased arrests of narcotics traffickers, as well as seizures of cocaine, cocaine products and precursor chemicals, were also realized.

The Banzer administration is the first to devise and set forth a credible, formal strategy to eliminate coca cultivation in Bolivia. Despite a shaky start last spring and continuing violence against eradication and counter-narcotics forces, the GOB showed its determination to persevere with its five-year plan. USG experts also credit 1998's success to the GOB's abolition of direct compensation to coca growers, and to devoting enough human resources to the eradication and security effort. The Banzer administration's embrace of alternative development has not only provided farmers with licit, profitable alternatives to growing coca, but has changed public opinion against coca growing and cocaine production activities.

Three-fourths of Bolivia's judicial reform package has been enacted, which should make the criminal justice system faster, more transparent and accessible, less politicized, and less corrupt. Currently being debated in the legislature is the Code of Criminal Procedure, the final part of the reform package. It should include language that permits police to use informants, controlled deliveries, undercover operations, and other modern law enforcement tools. Action on money laundering crime has been lacking, although the GOB named a Director of the Financial Investigations Unit of the Superintendency of Banks, which is charged with enforcing the anti-money laundering law.

If Bolivia is to realize its five-year goals, in 1999 the GOB should act to prevent new coca plantings and continue eradication efforts in a sustained manner. Other important objectives include initiation of eradication operations, alternative development in the Yungas, and prosecutions of those who plant new illicit coca fields there and in the Chapare. The GOB should also move forward to implement vigorously the law criminalizing money laundering, and actively seek out, investigate and prosecute public officials engaged in corruption. Finally, if its efforts are to be fully successful, the GOB should ensure that the new Code of Criminal Procedures provides law enforcement authorities with the tools they need to investigate and prosecute narcotics offenders.

Brazil

Brazil is a major transit country for cocaine shipped by air, river, and maritime routes from Bolivia, Peru, and Colombia to the United States and Europe. Because of increased interdiction of trafficker aircraft in Peru (along the Peru/Colombia air corridor), traffickers have shifted illicit narcotics flights into Brazilian air space. Brazil's vast and sparsely populated Amazon region provides ample opportunity for traffickers to transship drugs and chemicals by air and riverine routes. A southern ''drug route'' also exists along Brazil's borders with Paraguay and Bolivia. While not a major drug cultivation country, Brazil is a major producer of precursor chemicals and synthetic drugs.

Several key legislative initiatives, including an anti-money laundering law and legislation permitting the military to interdict unauthorized civilian aircraft (including those suspected of smuggling narcotics), were passed

by the Congress in 1998. A two-year-old omnibus counter-narcotics bill remained pending in the Congress at year's end. Brazil's major counter-narcotics policy initiative was formation of the National Anti-Drug Secretariat (SENAD) which will coordinate counter-narcotics efforts and activities nationwide.

Federal police continued their heightened surveillance of the Amazon region, which resulted in seizures of drugs, aircraft, boats and an assortment of weapons. While seizures of cocaine in 1998 were about the same as in 1997, and marijuana seizures were slightly lower than in 1997, seizures in psychotropic drugs increased tenfold over 1997 levels. Inadequate staffing and resources continue to hamper activities of the counter-narcotics unit of the Federal police.

Although Brazil does not extradite its own citizens, the Government continues to cooperate with the United States and other countries in the extradition of individuals accused of narcotics-related crimes.

Most of Brazil's demand reduction efforts are aimed primarily at young people, who constitute the largest group of drug users in the country. With the creation of SENAD, the GOB will focus even more attention on drug demand reduction, education, and treatment programs. Over half of Brazil's 26 states conduct some type of drug awareness program.

Top Brazilian counter-narcotics officials in SENAD have expressed a strong interest in more active cooperation and greater coordination with the United States in narcotics law enforcement, including interdiction activities.

Burma

Burma continues to be the world's largest source of illicit opium and heroin. There was, however, a significant decline in production and cultivation from 1997 levels. The 1998 crop estimates indicate there were 130,300 hectares of opium poppy cultivation, down 16 percent from 1997. The potential yield from this crop is up to 1,750 metric tons of opium gum. This is the lowest potential production figure in ten years and a drop of 26 percent from 1997 figures. Most of this crop decrease was due to weather; however, the Government of Burma (GOB) did engage in opium crop eradication efforts.

During 1998, seizures of methamphetamine tripled, although opium and heroin seizures were below last year's record levels. While there were cases of interdiction and arrests for narcotics trafficking of members of some tribal groups located outside the protected tribal areas, the GOB has been unwilling or unable to take on the most powerful groups directly. Cease-fire agreements with insurgent tribal groups dependent on the narcotics trade involve an implicit tolerance of continued involvement in illicit narcotics for varying periods of time. Given the scale of the problem in Burma, and what would be necessary to bring about lasting improvement, the GOB's efforts remain inadequate.

There is reason to believe that money laundering in Burma and the return of narcotics profits laundered elsewhere are significant factors in the overall Burmese economy, though the extent is impossible to measure accurately. Political and economic constraints on legal capital inflows magnify the importance of narcotics-derived funds in the economy. An underdeveloped banking system and lack of enforcement against money laundering have created a business and investment environment conducive to the use of drug-related proceeds in legitimate commerce. The GOB made little if any effort against money laundering during 1998.

Despite some progress over the past year, the USG remains concerned that Burma's counter-narcotics efforts are in no way proportional to the extent of narcotics cultivation and trafficking. Effective toleration of money laundering by the GOB, failure to turn over notorious traffickers under indictment in the United States, and general lack of respect for the rule

of law are also concerns. The United States remains prepared to cooperate with Burma in international efforts against narcotics, when the Burmese regime presents a consistent pattern of cooperation in all aspects of that effort.

Cambodia

Throughout 1998, Cambodia was embroiled in internal political strife and proactive counter-narcotics efforts suffered. This failure is reflected in a serious drop in the statistics for seizures and narcotics arrests. Reports indicate that narcotics traffickers, alien smugglers, and other criminals have found refuge in Cambodia. Corruption and factionalism among Cambodia's police are also a continuing problem—one police unit attacked another earlier this year in an effort to intimidate the unit attacked. Cambodia is not a major producer of narcotics or a center for narcotics-derived money laundering, although reports that narcotics proceeds are in fact laundered there persist. The country's principal involvement in the international narcotics trade is as a transit route for Southeast Asian heroin intended for overseas markets, including the United States. Marijuana is cultivated for export and the authorities have had only marginal success at stemming this flow, though Cambodian marijuana is not thought to have a major effect on the United States. Reports persist about the involvement by some elements of the Royal Cambodian Armed Forces and the national police in narcotics trafficking.

Outward cooperation by Cambodian police officials with the DEA on specific requests is excellent. Senior government officials consistently responded to requests to make available persons wanted on U.S. arrest warrants, including in narcotics cases. The Royal Government of Cambodia (RGC) has established a National Authority for Combating Drugs and a special drug enforcement unit in the Ministry of Interior; however, the effectiveness of these bodies has been limited by a lack of resources and training, corruption at various levels of the RGC, and the country's geographical location adjacent to major narcotics producing areas.

In the latter part of 1998, competing factions in Cambodia finally formed a coalition government, resulting from elections. We believe that at this crucial time, imposition of counter-narcotics sanctions would undermine U.S. interests in democracy and regional stability as well as limit anti-narcotics efforts. The ability to provide strategically placed U.S. aid at the appropriate time can help strengthen Cambodian institutions, with the objective of promoting greater official accountability and adherence to the rule of law. Furthermore, it is in the U.S. interest for Cambodia to contribute to the political and economic stability of the region, which should be furthered by Cambodia's anticipated accession to ASEAN membership in 1999. Thus, on balance, the consequence for the United States related to the counter-narcotics setbacks are far outweighed by the risks of being unable to support the new coalition government now in place at this critical juncture.

China

China continued to take strong and effective measures to combat the use and trafficking of narcotic drugs in 1998. China is a party to the 1988 UN Drug Convention, as well as to the 1961 UN Single Convention and its protocols, and the 1971 UN Convention on Psychotropic Substances. The Chinese government is committed to achieving the goals of the 1988 Convention, implementing several new initiatives to strengthen its counter-narcotics efforts at all levels, from apprehending and prosecuting traffickers to counteracting drug addition and abuse.

Preliminary figures indicate that during 1998 Chinese police seized record amounts of heroin, other illicit drugs, and precursor chemicals. The Chinese government sponsored a nationwide education campaign aimed primarily

at reducing drug use by youth. Narcotics enforcement cooperation between the United States and China continued to expand in 1998, with increased levels of training, professional exchanges, and tactical-level enforcement cooperation. The United States and China established a Joint Liaison Group on Law Enforcement Cooperation, and are taking steps to further enhance mutual legal assistance; in general, however, China's response to U.S. requests could have been more forthcoming. The DEA anticipates the assignment of permanent staff for its new office in Beijing sometime in 1999.

China is a major producer of precursor chemicals. The ephedra plant, from which the precursor chemical ephedrine is extracted, grows wild in northern China. China produces and legally exports potassium permanganate, which can be used in cocaine production. The Chinese government vigilantly monitors precursor chemical exports and has in place a system of pre-export notification. Yunnan, the province most directly affected by China's growing drug problem, goes further than the 22 chemicals on the 1988 Convention Watch List by monitoring exports of 28 chemicals. According to press reports, in the first ten months of 1998, Yunnan provincial law enforcement authorities seized more than 300 metric tons of precursor chemicals destined for illegal use, more than the amount confiscated nationwide in all of 1997. China supports a law enforcement program to increase interdiction in Yunnan Province under the auspices of the UNDCP and funded by the USG.

Although Chinese law prohibits laundering the proceeds from illegal narcotics trafficking, China's legal system and banking regulations generally have not kept pace with the country's rapid economic internationalization. Consequently, China is vulnerable to possible exploitation by drug traffickers, particularly from Burma, seeking to launder money.

Colombia

Colombia developed a solid record of success in meeting the 1998 certification criteria, with several notable exceptions. A new counter-narcotics strategy, developed by the incoming Pastrana administration earlier in the year, establishes a solid platform to frame efforts in the coming years. Such strategic planning was almost totally lacking in Colombia before then. The USG is working closely with the Government of Colombia (GOC) to refine and improve that strategy. Pastrana administration officials have been very receptive to U.S. offers of advice and assistance, and expressed a commitment in the Joint Alliance Against Drugs, signed during President Pastrana's visit in October 1998, to continue close cooperation as we advance our joint counter-narcotics goals. This willingness to cooperate closely is the greatest difference between the current status of efforts in Colombia and the checkered history of the last four years. While political will is difficult to measure and can only be tested by time, it appears that a corner has been turned in Colombia that will allow for much closer cooperation and greater results in the near future.

The Colombian National Police (CNP), under the leadership of General Rosso Jose Serrano, added to its record of outstanding performance in counter-narcotics. This year the CNP received more and better support from the Colombian armed services, and joint operations in southern Colombia began to show success. Such joint operations will be an important factor in the future of the program, given the increasing threat to counter-narcotics operations from heavily armed traffickers and the guerrillas and paramilitaries who are involved in many aspects of narcotics trafficking. For the third straight year, record levels of illicit crops were eradicated, although this eradication did not offset the continuing expansion of cultivation by the traffickers as part of their effort to concentrate the entire drug industry within Colombia. The CNP also had a strong year in terms of seizures and arrests of important traffickers.

Another key criterion was fully met when the GOC set up a successful program to register and regulate privately owned aircraft in Colombia, which has the effect of discouraging their use in narcotics trafficking. The GOC has also begun to take action on prison reform, a long-standing problem.

The biggest disappointment of 1998 was the 5–4 decision of the Colombian Constitutional Court in August to uphold the new Colombian extradition law as passed by Congress. The court rejected the claim advanced and supported by both the Samper and Pastrana administrations that procedural irregularities in the congressional votes resulted in the passage of a law which does not apply retroactively. The lack of retroactivity in the law severely limits its effectiveness. As a result, the law places the imprisoned Cali cartel kingpins beyond the reach of U.S. justice, at least with regard to crimes committed before passage of the extradition law in December 1997.

The judicial system continues to be the weakest link in Colombia's counter-narcotics performance. 1998 saw little progress in resolving the endemic problems in a system that is plagued by corruption, incompetence and inefficiency. Asset forfeiture laws and money-laundering laws are still not enforced to any meaningful extent, and needed legislative reforms such as stiffer prison sentences for narcotics trafficking and establishment of legislation to deal with ongoing criminal enterprises have not been advanced.

Overall, however, Colombian counter-narcotics performance improved in 1998, and the arrival of the new Pastrana administration gives grounds for optimism about the future.

Dominican Republic

The Dominican Republic is a major transshipment point for drugs destined for the United States and Europe. Traffickers smuggle narcotics from Colombia, Venezuela, and Panama into Dominican territory by air and sea, and from Haiti by land routes. The drugs are then moved onward by air and sea to Puerto Rico and the United States.

The Government of the Dominican Republic (GODR) demonstrated strong counter-narcotics law enforcement and interdiction efforts in 1998. The GODR continued to cooperate fully with the USG on counter-narcotics goals and objectives, including expanded cooperation under the 1997 bilateral maritime interdiction agreement. Cocaine and heroin seizures increased dramatically in 1998. The GODR initiated a new border patrol unit to control the flow of drugs into the Dominican Republic from Haiti. For the first time ever, the Dominican Republic and Haiti cooperated on an anti-drug smuggling border operation. The GODR and the USG signed an agreement to establish a canine drug detection program at Dominican airports and seaports. Despite recent improvements, however, a weak judicial system continues to hamper law enforcement efforts.

In 1998, the GODR enacted legislation repealing a prohibition on the extradition of Dominican nationals and explicitly authorizing the extradition of nationals. The Dominican Republic subsequently extradited one of its nationals to the United States in 1998. We will continue to urge the GODR to act on a number of other U.S. extradition requests and to adopt a National Counter-Narcotics Master Plan.

Ecuador

Ecuador continues to be a major transit country for the shipment of cocaine from Colombia to the United States and Europe. Traffickers also use Ecuador for money laundering of drug profits and to transit precursor chemicals destined for Colombian drug labs. Some poppy and coca fields have been found within Ecuador, but there are no indications that significant amounts of heroin or cocaine are produced.

Although lack of adequate governmental funding for counter-narcotics programs and little interagency coordination are weak points, the Government of Ecuador (GOE) continued to demonstrate its cooperation and willingness to work closely with the USG in countering narcotics trafficking and transshipments, chemical diversions, money laundering, and judicial corruption/inefficiency. The GOE has also stated its willingness to improve bilateral cooperation in maritime interdiction.

The GOE has increased the effectiveness of its anti-narcotics activities by randomly deploying mobile road interdiction teams along Ecuadorian highways, a tactic which accounted for 40 percent of the drugs seized by the police. Successes for the national police included seizures of 42 kilograms of heroin and the seizure of 7.6 tons of cocaine from the Fishing Vessel DON CELSO. The GOE also deployed drug detector dogs at airports; inaugurated a Joint Information Coordination Center (JICC) in the major port city of Guayaquil; and passed legislation to combat corruption and inefficiency in the Customs Service. The Superintendent of Banks indicated strong interest in creating a joint task force to expedite interagency coordination in pursuing financial investigation regarding control of money laundering.

To improve the professionalism and efficiency of its enforcement efforts, the GOE has created a judicial police unit to foster closer coordination with prosecutors. The GOE also plans to create a separate anti-narcotics police unit within the judicial police system to allow greater concentration of efforts in this field.

Guatemala

President Arzu has taken Guatemala well down the road to reconciliation of its 36-year internal struggle. His efforts are now focused on combating violent crime, organized crime and other domestic issues. He has fully cooperated with the United States in combating counter-narcotics trafficking in Guatemala and in the region.

Guatemala's location and scarce law enforcement resources facilitate its continued use by traffickers as a transshipment and storage point for cocaine destined for the United States via Mexico. Along with increased use of motor vehicle and container shipments, there has been an increase in airdrops of illicit drugs over Guatemalan territory for consolidation and transshipment. With USG assistance, the Department of Anti-Narcotics Police (DOAN) has stepped up training to react to air shipments and efforts to develop air interdiction capabilities. The expanding self-funded port security program and the trained DOAN agents made impressive seizures in the past year.

The consolidation of the National Civilian Police (PNC) continues on track with full integration of the DOAN. The USG-trained DOAN seized almost 10 metric tons of cocaine in 1998. The drug prosecutor assistance program maintained its 90 percent conviction rate, with some traffickers receiving sentences of up to 20 years. The new drug prosecutor's field office in Quetzaltenango accounted for 110 successful prosecutions in 1998.

Guatemala is a party to the 1988 UN Drug Convention and most GOG law enforcement activities are fully consistent with its goals and objectives. However, some of the Convention's provisions have not been codified into law and regulations, including provisions on extradition and money laundering. President Arzu has also been unsuccessful in gaining legislative support for ratification of a full maritime counter-narcotics agreement.

In 1998, the Government of Guatemala (GOG) began implementation of its national drug policy, the anti-drug master plan, and national strategy which incorporates both demand and supply reduction objectives to be accomplished by specified ministries. The GOG provided additional funding to plan implementers to attack the alarming increase in drug abuse docu-

mented last year. The GOG also took major steps in implementing assets seizure and precursor chemicals regulations.

Haiti

Haiti in 1998 made significant progress in a number of areas of counter-narcotics performance and cooperation, but a political impasse spanning the entire year precluded passage by Parliament of key antidrug laws and other important steps. Resource constraints—Haiti is the hemisphere's poorest country—and the lack of an effective judiciary also reduced the effectiveness of Haitian counter-narcotics efforts. As a result, Haiti fell short of agreed-upon counter-drug goals and cannot be certified as having fully cooperated with the United States or on its own to meet the goals and objectives of the 1988 UN Drug Convention, to which Haiti is a party. However, the vital national interests of the United States require that foreign assistance continue to be provided to Haiti.

Haiti is a significant transshipment point for drugs, primarily cocaine, moving through the Caribbean from South America to the United States. The increased flow through Haiti is directly related to the success of interdiction operations in other parts of the region and the perception that the Government of Haiti (GOH) is ill-prepared to respond.

The certification goals set, in consultation with GOH, for 1998 were: to present to Parliament for passage a set of anti-drug trafficking laws, including money laundering and asset forfeiture, which were drafted in 1997; to begin implementing the ''National Master Plan for Combating Drugs in Haiti'' drafted in 1997; and to target at least one major international narcotics organization for significant enforcement action.

Haiti did not meet two of these three goals, principally because of the prolonged political impasse between the executive and legislative branches, funding shortfalls, and insufficiencies in institutional structures. The political stalemate prevented the parliamenary ratification of a Prime Minister with executive authority throughout 1998. This meant that, in accordance with the constitution, no new legislation, including the anti-drug laws and the National Master Plan, could be presented to the Parliament for enactment. (Indeed, the Parliament failed to act even on legislation clearing the way for significant new international loans, in which all Haitian parties presumably had an interest.)

Although there was some implementation of elements of the Master Plan, GOH efforts to investigate, arrest, prosecute, or convict members of international drug trafficking organizations were lacking. This lack of success, however, must be understood in the broader context of Haiti's pervasive poverty, its dysfunctional judicial system, the still limited capabilities of the four-year-old Haitian National Police (HNP), and the inexperience and inadequacy of the two-year-old police anti-narcotics unit (BLTS).

Although most of the specific goals set during the year were not achieved, Haiti's performance and cooperation with the United States improved significantly in a number of key areas. Haiti signed a Joint Information Coordination Center (JICC) agreement with the United States. The entire staffs of the JICC and BLTS were polygraphed. Under a DEA-mentored task force concept, the flow of cocaine from Panama through Port-au-Prince airport has been reduced. Port-au-Prince's seaport is now the target of periodic inspections, including by U.S. Customs Service sniffer dogs in November. The HNP has indicated it will cooperate on the expulsion to the United States of third country nationals who are the subjects of U.S. indictments. The Haitian Coast Guard fully cooperated with the USCG ''ship rider'' program, and is increasingly demonstrating independent initiative at sea. The HNP counter-narcotics unit increased the quantity of drugs seized without direct USG assistance. The GOH also initiated the first joint Haitian-Dominican drug monitoring effort at the Malpasse-Jimani border crossing.

A vital national interests certification is appropriate and necessary. A cutoff of U.S. bilateral assistance mandated by denial of certification would adversely affect vital U.S. national interests in Haiti, including ending the ongoing political crisis, promoting economic stability and democracy, and stemming the flow of illegal drugs and migrants to the United States.

Denial of certification would terminate USG programs that provide critical support for Haiti's fragile economy. Without external assistance and the police mentoring that accompanies it, economic stability and growth would be jeopardized, with consequent renewed pressure on illegal immigration to the United States.

USG and other international programs that go beyond counter-narcotics assistance also address underlying problems in the Haitian law enforcement and judicial systems, especially endemic corruption and the lack of a strong professional tradition, that contribute to a weak anti-drug performance. A cutoff of USG programs and the votes against multilateral development bank funding would undermine USG efforts and reduce the incentive for Haitian counter-narcotics entities to improve that performance.

The risks posed to all of these U.S. interests by a cutoff of bilateral assistance outweigh the risks posed by Haiti's failure to cooperate fully with the USG or to take adequate steps on its own to combat illicit narcotics. Haiti's inability to fulfill key counter-narcotics commitments in 1998 precludes full certification, but decertification would deny GOH many of the desperately needed resources to make progress in the counter-narcotics and other arenas.

Hong Kong

Hong Kong traffickers continue to control large portions of Southeast Asian narcotics traffic, arranging both the financing and shipping of narcotics through Asian ports. In 1998, none of the heroin seizures in Hong Kong appeared destined for the U.S. market. No major heroin seizures in the United States had clearly transited Hong Kong. However, historical precedent, geographic location, transportation infrastructure, and trade activity suggest that Hong Kong remains an important factor in heroin supply to the United States.

Hong Kong uses a multi-pronged strategy in combating drug trafficking and abuse, incorporating legislation and law enforcement, treatment and rehabilitation, preventive education and public awareness, and international cooperation. Money laundering, which often stems from drug trade proceeds, is a serious issue for the Hong Kong authorities. The Financial Action Task Force reviewed Hong Kong's financial system in April 1998. Hong Kong played an active role in reducing illicit trafficking of narcotics and precursor chemicals, another major concern, through its participation in the UN Commission on Narcotic Drugs as part of the People's Republic of China delegation. During 1998, a new extradition treaty between the United States and Hong Kong entered into force. Hong Kong also signed mutual legal assistance agreements with several countries and, in December 1998, the United States ratified a Mutual Legal Assistance Agreement and a Prisoner Transfer Agreement with Hong Kong. Both agreements await legislative approval in Hong Kong.

While trafficking and money laundering remain issues for Hong Kong, the authorities of the Hong Kong Special Administrative Region have launched serious efforts in all areas of enforcement and have been exemplary partners with the United States in the battle against narcotics.

India

India, an important producer both of licit and illicit narcotics, is also a crossroads for international narcotics trafficking. There was no USG illicit

poppy survey in India in 1998. Indian authorities claimed there were less than 100 hectares of illicit cultivation, but the last available USG surveys in 1996 and 1997 identified 3,100 and 2,000 hectares of illicit opium poppy, respectively.

India's location between the two main sources of illicit opium, Burma and Afghanistan, as well as its relatively well-developed transportation infrastructure, make it an ideal heroin transit point. There was credible evidence of large amounts of Burmese heroin being trafficked through India's northeastern border with Burma. However, there is no evidence at this time to indicate that opiates transshipped through India reach the United States in significant amounts.

The Government of India (GOI) continues its progress in controlling the production and export of narcotics chemical precursors produced by India's large chemical industry. The GOI controls restrict access to acetic anhydride (AA), a chemical used to process opium into heroin. Nevertheless, there were unauthorized exports of essential chemical precursors and methaqualone (mandrax), a popular drug in Africa. Despite GOI precautions, in late 1998, there was growing evidence of AA entering Burma via India's porous Northeastern border for use in Burmese heroin refining. The GOI has a cooperative relationship with the DEA. However, there has been limited success in prosecuting major narcotics offenders because of the lack of enforcement funding and weaknesses in the intelligence and judicial infrastructure.

In 1998, India took concrete steps to deter trafficking and control chemicals. The GOI systematically combatted illicit opium cultivation by combining remote sensing information with raids and the destruction of illicit crops. The Narcotics Control Board (NCB) continues to monitor industry manufacture and sales of controlled and precursor chemicals carefully, resulting in a price rise of precursor chemicals for illicit use. The NCB fully staffed three new zonal offices opened in 1996 along the border with Pakistan, and they are now fully operational. The zonal office in Imphal, Manipur, is also being fully staffed to add a greater enforcement presence in the northeast.

GOI counter-narcotics officials increased their cooperation with drug liaison officers from countries in Europe, the Middle East and Africa to undertake a successful series of controlled delivery operations in 1998. These operations, many through parcel post, resulted in the arrest of more than 18 persons and the seizure of quantities of heroin, hashish, and methaqualone. The GOI has created the position of Joint Secretary for Narcotics in the Ministry of Finance reporting directly to the Revenue Secretary in order to tighten licit and illicit narcotics controls. This position has also increased the flow of information to Mini-Dublin Group countries and other bilateral and multilateral donors. Finally, to decrease the backlog of cases, the GOI continues to work with special state courts for narcotics matters, and federal narcotics enforcement officials continue to meet quarterly with their state government counterparts to share information and provide training. Federal efforts have spurred the formation of specialized narcotics units in state and metropolitan police agencies.

India is a party to the 1988 UN Drug Convention, but has not yet enacted supporting legislation on money laundering or asset seizure under civil law. This supporting legislation is now being prepared for resubmission to the Parliament. However, with the cooperation of UNDCP, the GOI hosted a regional conference on money laundering in New Delhi in March 1998. The conference focused on harmonizing regional efforts to fight money laundering and brought together experts from all over South Asia.

In order to build on this progress, the USG will encourage GOI to take several important law enforcement steps in 1999. India needs to increase seizures of drugs sharply and to investigate and dismantle smuggling rings. The GOI should give increased priority to combating trafficking on the Indo/Burma border, which may be at least five metric tons of heroin per

year. The GOI should pass the amendments to the Narcotic Drugs and Psychotropic Substances Act (NDPS) of 1985, introduced into Parliament in August 1997, which would modernize the criminal justice system.

India is the world's largest producer of licit opiates for pharmaceutical use and the only producer of licit gum opium. The GOI continues to tighten its control over diversion of licit opium. However, some opium continues to be diverted from the country's legal production. The GOI estimates diversion at about 10 percent, although it may be as high as 30 percent. As a licit producer of opium, India must meet an additional certification requirement. In accordance with Section 490(c) of the Foreign Assistance Act, India may not be certified unless it maintains licit production and stockpiles at levels no higher than those consistent with licit market demand and has taken adequate steps to prevent significant diversion of its licit cultivation and production into illicit markets and to prevent illicit cultivation and production.

Production and stockpile of licit opium in India has clearly not exceeded licit market demand. Indeed, India's stockpile has been barely adequate for some time and disastrous weather during the 1997–1998 poppy growing season, combined with a cultivator's ''strike'' which delayed planting, led to a 1998 harvest that is one of the smallest on record: about 260 metric tons (MT), well under even initial GOI estimates. To meet domestic and international licit demand, the GOI now concedes that it has been forced to ''completely exhaust'' its licit opium stockpile, leaving no carryover stock from 1998 whatsoever. This precarious situation makes an adequate 1999 harvest extremely important, and the USG is thus encouraging increased licit production.

To meet India's share of anticipated world demand for licit opium in 1999, and begin rebuilding domestic stockpiles to about 750 MT, the GOI plans to produce a licit opium harvest of at least 1300 MT in 1999, just below the 1997 record harvest. To meet this goal, the GOI has decided to reverse years of reductions in acreage (to improve control of diversion) and to sharply increase both the area under cultivation and the number of licit opium cultivators. Acreage will be increased by 32 percent; licit cultivators will more than double.

In 1998, India took six important steps to increase licit opium production to meet market demand and rebuild the stockpile while curtailing the diversion of licit opium. These steps included: (1) sharply raising the number of hectares to be cultivated for the 1998–1999 poppy growing season; (2) retaining the highest-ever minimum qualifying yield at 52 kilograms/hectare to discourage diversion from the licit crop; (3) raising the prices paid to opium cultivators to increase incentives for declaring and selling to GOI all licit opium; (4) expanding licit opium diversion controls to include re-surveys of plots after the planted crop reaches a particular stage of growth to ensure that the area under cultivation matches the amount of land licensed; (5) destroying cultivation more than five percent above the licensed amount with the cultivator liable for prosecution; and (6) raising licit opium diversion-related offenses by licensed cultivators to the level of trafficking offenses, with convictions resulting in 10 to 20 years imprisonment and fines up to U.S. $6,000.

While these are important steps to curb diversion, the USG believes even more must be done, given the significant planned increase in hectarage and farmers. The USG will work with the GOI to increase diversion controls. Despite the assent of a high-ranking GOI official in February 1998 to undertake a comprehensive joint opium yield survey with the USG, the GOI has not yet signed the necessary formal agreement. A joint licit opium survey would provide a firmer scientific basis for the GOI to set minimum qualifying yields (MQY) for licit opium farmers. More realistic MQYs would facilitate governmental controls on diversion and forecasting the supply of licit opiates.

Jamaica

Jamaica is a major transit point for South American cocaine en route to the United States and is also the largest Caribbean producer and exporter of marijuana. During 1998, the Government of Jamaica (GOJ) made some progress toward meeting the goals and objectives of the 1988 UN Drug Convention, to which it became a party in 1995. At regional meetings, GOJ officials actively supported counter-drug initiatives. Bilateral counter-drug cooperation is good and improving, especially in the area of maritime law enforcement. The U.S.-Jamaica bilateral maritime agreement, proposed by the USG in July 1995, came into force when Jamaica passed enabling legislation in February 1998. Jamaican forces participated in several combined operations under the new agreement.

During 1998, the GOJ removed four persons to the United States, three by extradition and one under a waiver of extradition, compared to three removals in 1997. The USG and GOJ worked together to remove from the list of pending extradition requests all non-active cases, leaving 17 pending requests for which the United States seeks early resolution.

GOJ's cannabis eradication during 1998 was down only slightly from 1997, despite a lack of helicopter and fixed wing air support. Marijuana and cocaine seizures and drug-related arrests increased significantly over 1997; hash oil seizures were down. The GOJ made a valuable contribution to regional anti-drug efforts by assuming funding of operating costs of the Caribbean Regional Drug Law Enforcement Training Center, located near Kingston and built with USG funding under a UNDCP project.

In 1998, the Lower House of Parliament passed amendments to the existing anti-money laundering legislation; Senate action is pending. If passed by the Senate, the proposed amendments would raise the threshold for mandatory transaction reporting from U.S. $10,000 to U.S. $50,000 equivalent, but would also introduce a new requirement that suspicious transactions in any amount be reported. Further GOJ action is required to bring its anti-money laundering law in line with international standards, especially extending the law to cover the laundering of the proceeds of all serious crime.

Current Jamaican law requires the conviction of a criminal drug defendant prior to commencing a forfeiture action. The GOJ forfeited the house of a convicted drug trafficker in 1998. However, Jamaica's current asset forfeiture regime does not permit the GOJ to take full advantage of the forfeiture mechanism to augment the resources of its anti-drug agencies and deprive criminals of the proceeds of their crime.

In 1998, the GOJ did not table in Parliament a precursor and essential chemical control law, despite stated commitments to do so for the last several years. However, the GOJ has budgeted for implementation of chemical controls, and the USG has already provided training to Jamaican precursor chemical control personnel. The GOJ did table in Parliament anti-corruption legislation, which is currently under debate. Corruption, especially among members of the security and law enforcement forces remains a serious problem in Jamaica, and the GOJ should take stronger action to prosecute corrupt individuals.

In 1998, the GOJ arrested 7,352 drug offenders, and the Supreme Court reported 10,290 convictions of drug offenders. However, even though GOJ counter-drug cooperation with DEA continued to be good, no Jamaican drug kingpins were arrested or convicted during 1998. The GOJ has agreed to develop in the coming year, with USG assistance, special units to target drug kingpins and apprehend fugitives from justice.

The GOJ has in place a comprehensive national drug control strategy which covers both supply and demand reduction; the GOJ should add to its strategy specific goals and objectives and measures of effectiveness. The GOJ also should ratify the Inter-American Convention against Corruption,

and, as it mandates, put in place legislation that requires financial disclosure by public officials. The GOJ also needs to take stronger steps to strengthen internal controls and investigate and prosecute corrupt members of the security and law enforcement forces.

The USG will continue to provide technical assistance, training, and equipment to the GOJ to help strengthen its anti-drug, anti-money laundering and anti-corruption laws and enforcement capabilities. In addition, the USG will continue to assist the GOJ to address port security problems identified in a 1997 comprehensive assessment.

Laos

Laos remains the world's third largest producer of illicit opium, trailing only Burma and Afghanistan. However, because small-scale subsistence farmers, without fertilizer, irrigation, or other agricultural improvements grow opium, Lao yields average less than half those found in neighboring Burma.

For the 1998 growing season, although opium cultivation fell only seven percent, adverse weather conditions, which also affected opium production in Burma and Thailand, dramatically affected production levels. The United States estimates Lao potential opium production for 1998 at 140 metric tons, down 33 percent from the previous year. Significant decreases in production can also be attributed to lower productivity per hectare due to crop substitution in project areas funded by foreign donors. These areas continued to show only low levels of opium cultivation, none of which was for commercial distribution, but rather was restricted to small amounts for local use.

In January 1998, a heroin laboratory was seized in Bokeo province, the first such seizure this decade. In July, the position of Chairman of the Lao National Drug Commission was raised to ministerial rank. A DEA agent was assigned to the U.S. Embassy in Vientiane for the first time since 1975. Laos is not yet a party to the 1988 UN Drug Convention, but the government of Laos (GOL) has set a goal of ratification by the year 2000.

Laos' location next to the world's largest producer of opium and heroin (Burma), and its land borders with countries that combine important opium markets and ports on trade routes to Europe and the United States (China, Thailand, Vietnam, and Cambodia), make it an important route for drug trafficking. The GOL does what it can to combat trafficking and has shown itself ready to work very closely with the international donor community to attack the socio-economic problems underlying poppy cultivation in Laos. The GOL has already opened four Drug Control Units, and is determined to open one in each of the country's provinces.

Mexico

Mexico made significant counter-narcotics progress in 1998. Building on presidential commitments made in May 1997, the United States and Mexico developed a Bi-National Drug Strategy—released in February 1998—which identified sixteen areas for cooperation in reducing the illicit consumption, production and trafficking in drugs. Later in 1998, the two countries developed Performance Measures of Effectiveness for the Strategy to guide its implementation and to provide a means of monitoring progress. The Measures were formally adopted during President Clinton's trip to Mexico in February 1999. The U.S.-Mexico High-Level Contact Group on Narcotics Control (HLCG) and the Senior Law Enforcement Plenary continued to serve as the principal fora for coordination of bilateral counter-narcotics cooperation.

USG agencies enjoy productive working relationships with Government of Mexico (GOM) counterparts across a broad range of counter-narcotics programs. The two governments have established numerous mechanisms, both formal and informal, to promote good communication and coordination.

The most serious obstacles to both bilateral counter-narcotics cooperation and the effectiveness of Mexican agencies in combating the major drug cartels relate to institutional weaknesses, such as lack of adequate resources and training and widespread drug-related corruption. The GOM took a number of important steps in 1998 to address these problems. For example, for the first time ever, the Office of the Attorney General (PGR) implemented an intensive screening process for recruits to law enforcement as well as for all personnel assigned to sensitive positions. This level of screening will eventually be expanded to all PGR personnel. These kinds of reforms, along with bilateral training activities, are helping to build confidence between USG and GOM authorities, resulting in improved bilateral cooperation.

The GOM also took steps during 1998 to implement important legislative reforms designed to enhance efforts against drug trafficking and organized crime. Among these steps were introduction of legislation regulating seized property to allow for asset forfeiture and sharing, streamlining the Mexican code of criminal procedure to facilitate prosecution of drug traffickers, and reducing the ability of employees dismissed for corruption to be reinstated upon appeal. In an effort to enhance professionalism and increase capabilities, Mexican law enforcement and judicial officials participated actively during 1998 in various bilateral training programs designed to improve management of evidence, electronic surveillance, asset forfeiture, drug detection, and fraud investigation.

During 1998, Mexican authorities arrested numerous drug traffickers, including Jesus and Luis Amezcua (major methamphetamine traffickers wanted for extradition to the United States), twenty members of the Amado Carrillo Fuentes Organization (the Juarez Cartel), the former military commander of Baja California, and two Federal Judicial Police chiefs. Notable convictions and sentences for drug-related crimes in 1998 include former Drug Czar Army General Gutierrez Rebollo (sentenced to almost 14 years for offenses involving illegal possession and transportation of firearms and abuse of authority), and Ernesto ''Don Neto'' Fonseca Carrillo (sentenced on drug charges to 11 years, in addition to time he is serving for the 1985 murder of a DEA agent). Over 10,000 Mexican nationals and 255 foreign nationals were arrested on drug-related charges.

On the basis of legislation and regulations adopted in 1996–97, the GOM made progress last year in detecting and prosecuting instances of money laundering. The Financial Investigative Unit established in 1997 in Mexico's Finance Ministry continued to work closely with USG counterparts on money laundering investigations, providing leads, follow-up and access to witnesses. With informational assistance and technical support from the USG, the GOM increased seizures of drug traffickers' assets in 1998, including a $250 million seizure of assets connected to Alcides Ramon-Magana in Cancun. Mexico's first successful prosecution for money laundering demonstrated encouraging progress in 1998.

The GOM sustained its massive interdiction and eradication programs throughout 1998. For example, Mexican law enforcement and military personnel seized 22.6 metric tons of cocaine and over 1,000 metric tons of marijuana. They eradicated for an entire growing season approximately 9,500 hectares of opium poppy and 9,500 hectares of cannabis. The GOM continued cooperation with the USG in interdicting drug shipments throughout 1998. For example, during one major event, the GOM seized three tons of cocaine from a trafficking vessel forced to land by coordinated action by the U.S. Coast Guard and the Mexican Navy. In addition, bilateral cooperation in using U.S. air assets to detect and monitor drug flights increased in 1998.

Both governments recognize that much remains to be done to dismantle the major international drug cartels, which pose such a serious threat to both nations. The criminal organizations based in Mexico are well financed and violent, placing Mexican law enforcement and military personnel at grave risk. The persistent corrupting influence of these groups is also an important concern for the GOM.

President Zedillo has publicly underscored his commitment to combat drug trafficking and to strengthen Mexico's law enforcement institutions. He reaffirmed this commitment to U.S. officials, including in a June 1998 meeting with President Clinton at the UN General Assembly Special Session on Drugs. In February 1999, the GOM announced a major public security initiative which will significantly intensify the national anti-drug effort. Despite an austere budgetary situation, President Zedillo has directed the GOM to invest up to $500 million over the next three years on enhancements to the nation's capabilities to interdict drug shipments, to combat the major drug trafficking organizations, and to counter the corrupting influences that these organizations exert in both the public and private sectors. the initiative also calls for a major effort to address street crime and violence.

The USG and the GOM have carefully nurtured positive working relationships, and the goodwill resulting from those efforts will remain essential as both Governments continue to confront the shared threat of international drug trafficking.

Nigeria

Nigeria has failed to fully meet the criteria for cooperation with the United States on counter-narcotics matters and has not taken adequate steps on its own to meet the goals of the 1988 UN Drug Convention. The vital national interests of the United States, however, require that Nigeria be certified in order that assistance, otherwise withheld, might be provided to support the transition to democratic civilian rule and the increased efforts to improve cooperation on counter-narcotics and other crime evident during recent months.

Nigeria remains the hub of African narcotics trafficking. Nigerian criminal organizations operate global narcotics trafficking networks. They control sub-Saharan African drug markets, transport heroin from Asia to Africa, Europe and the United States, and transport cocaine from South America to Europe, Africa and Asia. Nigerian smugglers are responsible for a significant portion of the heroin used in the United States. Marijuana, the only narcotic grown in Nigeria, is exported to Europe and other African nations, but has little impact on the United States.

Nigerian counter-narcotics efforts remain unfocused and lacking in material support. New head of state General Abubakar's strong public stand against narcotics trafficking and other crimes was a welcome change from past indifference, but has not yet resulted in new policies or action. The Government of Nigeria (GON) reaffirmed the existing bilateral basis for extraditions, but had not yet concluded any extraditions by the end of 1998. The 1995 National Drug Strategy remains unimplemented; wage increases that would have given law enforcement personnel a living wage for the first time in more than a decade were announced, but have not yet been implemented. Nigerian law enforcement continues to suffer from lack of material support, insufficient training, and widespread corruption.

In 1998, there was some progress with the interdiction of low level couriers, gradual improvements in the capabilities of the National Drug Law Enforcement Agency (NDLEA), and the intensification of basic demand reduction efforts. The NDLEA made a number of seizures from individual couriers, but no major drug traffickers were prosecuted or convicted; total heroin seizures decreased. The increasingly sophisticated bulk and mail concealment methods of drug traffickers are moving beyond the capabilities of Nigerian law enforcement to detect them. The GON did not share counter-narcotics intelligence with the USG. A limited number of asset seizures were made, none against major traffickers or money launderers, and no asset seizures were prosecuted to conclusion. Nigeria has only just begun to acknowledge the depth of its own drug abuse problem. Demand reduction efforts have intensified with the opening of anti-drug clubs at Nigerian universities, and their endowment with anti-drug literature and videos. Most of these

efforts, however, are nascent and are hindered by the continuing misperception that drug abuse is a ''foreign'' problem.

Nigerian money launderers operate sophisticated global networks to repatriate illicit proceeds from narcotics trafficking, financial fraud and other crimes. Efforts to enforce the well-drafted money laundering decree were uneven and superficial, and did not result in any convictions or asset seizures that were prosecuted to conclusion.

Nigeria is one of the most important countries in Africa. What happens in Nigeria politically and economically will, to a large degree, determine whether there is stability and progress toward democracy and economic reform in West Africa. If Nigeria's ongoing transition fails, it could easily result in an implosion of government and the collapse of the economy, triggering a humanitarian disaster in Africa's most populous country, with over 100 million people, and a destabilizing exodus of Nigerians to neighboring states. Such an upheaval could also disrupt the movement of high-quality Nigerian oil, which accounts for more than seven percent of total U.S. petroleum imports.

If, on the other hand, Nigeria's transition succeeds, it will be an example to all of Africa, and has the potential to lead to economic growth and greater transparency in government. Nigeria could become an engine for growth in West Africa. A stable and democratic Nigeria will permit greater cooperation between law enforcement agencies, and the opportunity to reduce the impact of Nigerian criminals who prey on the American people.

The military's acceptance of its appropriate role in a functioning democracy, and the new civilian government's ability to govern, will be critically impaired if Nigeria if deprived of the full range of U.S. support. Building a political consensus and meeting the challenges of a collapsing economy will also depend in no small part on outside assistance and expertise.

Denial of certification would block assistance the new democratically-elected government will need to meet these challenges, seriously damaging the prospects for success of stable, transparent democracy in Nigeria. U.S. vital national interests require providing humanitarian, economic and security assistance to Nigeria as well as counter-narcotics assistance from all sources. The risk of not doing so now would jeopardize not only Nigeria's transition to democracy, but also Nigeria's attempts to reinvigorate its failing economy and support for democracy and peacekeeping throughout the region. Further, any new civilian government's ability to work with the United States on all issues, including counter-narcotics and other law enforcement, will depend on its access to multilateral lending and U.S. technical and economic assistance. The risks posed by the cutoff of assistance clearly outweigh the risks associated with GON's inadequate counter-narcotics performance over the past year.

Pakistan

In 1998, Pakistan advanced toward its goal to eliminate opium poppy in the year 2000, by reducing opium poppy cultivation by 26 percent. The atmosphere for cooperation on drug control between Pakistan and the United States also improved significantly. Pakistan extradited two narcotics fugitives to the United States, whereas none were extradited in 1997.

The Government of Pakistan (GOP) undertook an unprecedented poppy eradication campaign in some of its most inaccessible territory, which reduced cultivation by 26 percent and production by 24 percent and decreased the cultivation level to significantly below that of 1996. Despite financial constraints, the GOP ensured that wheat for planting alternative crops arrived in poppy-growing areas in time for the October planting, to forestall a return to poppy cultivation.

Narcotics seizures were down, with heroin seizures down 48 percent. The GOP did, however, prevent the re-emergence of heroin/morphine labora-

tories in Pakistan, although some labs moved across the border into still chaotic Afghanistan. In November, the Prime Minister pledged to take steps to strengthen Pakistan's law enforcement agencies, particularly the Anti-Narcotics Force (ANF).

To meet law enforcement goals, a number of important arrests were made in 1998, including three individuals arrested in conjunction with heroin shipments that exceeded 100 kilograms. The GOP also arrested Faheem Babar, a major Lahore trafficker, whose arrest led to the discovery of an important drug trafficking organization operating with the alleged collaboration of at least one mid-level government official. Assets of drug traffickers totaling $5.8 million were frozen in 1998, and for the first time, a High Court ruled in favor of forfeiture of the assets to the government.

The GOP took several important steps to strengthen law enforcement in 1998. The Control of Narcotics Substances Act and the Anti-Narcotics Forces Act were extended to the tribal areas of the Northwest Frontier Province, a major drug trafficking area. For the first time, Pakistan's anti-narcotics laws can be legally enforced in Pakistan's tribal areas. The GOP also approved cooperation with DEA for the establishment of a special vetted unit within the ANF.

To meet extradition goals, the GOP extradited two drug traffickers on the extradition list and arrested three more. Many extradition requests remain problematic, as neither DEA nor the GOP have addresses for many extraditables within Pakistan. The GOP also requested certification that the cases were still pending in U.S. courts. To meet anti-corruption goals, in 1998, ANF removed 70 corrupt officials from its ranks.

Pakistan's counter-narcotics performance improved in many aspects from last year's record. Independent of USG assistance, the GOP took a number of steps on its own to meet the goals and objectives of the 1988 UN Drug Convention, including: extending the Control of Narcotics Substances Act and the Anti-Narcotics Act to tribal areas in the Northwest Frontier Province; freezing significant drug trafficking assets; arresting several major drug traffickers; and dismissing corrupt counter-narcotics officials.

The GOP also actively and fully cooperated with the USG beginning in April to meet a number of important mutual counter-narcotics goals, including: an agreement with DEA to establish the special vetted unit; increased extraditions; arrests of some major drug traffickers; and the location of illicit poppy fields for the spring poppy eradication program.

The GOP should take immediate steps to improve its performance in a number of areas, including: significantly improved narcotics seizures; convictions of major drug traffickers; closure of pending cases against two prominent drug offenders, Sakhi Dost Jan Notezai and Munawar Hussain Manj; concentration of law enforcement resources in investigations, arrests, prosecutions and convictions of drug kingpins; and steps to enact and implement the narcotics-related money laundering provisions of the Control of Narcotics Substances Act and to approve formally the Drug Abuse Control Master Plan.

Panama

Panama is a major transit point for Colombian cocaine and heroin en route to the United States. Cocaine passes through Panamanaian territorial waters concealed in fishing boats, ''go-fast'' boats and ocean freighters. Some of it is offloaded on the Panamanian coast and then transported by truck up the Pan American highway bound for the United States, or carried by couriers travelling by air to the United States and Europe.

There is no evidence that any senior officials of the Government of Panama (GOP) are involved in drug smuggling. Nor does government policy encourage or facilitate drug-related criminal activity. However, the amount of drugs seized by Panama's neighbors to the north on the Pan American highway

suggests either inadequate inspections or corruption on the part of GOP border officials. The judiciary, with its traditional susceptibility to political influence and threats, remains a concern because of plans for it to assume control of the Judicial Technical Police, the principal partner of USG counter-narcotics operations.

The GOP continued implementation of its national counter-narcotics plan and its excellent cooperation with USG counterparts in 1998. Collection of information by the Financial Investigations and the Financial Analysis Units also improved during 1998. However, very little progress was made on bringing cases to prosecution. Panama remained active in international fora and associations targeting money laundering including the Egmont Group, the Caribbean Financial Action Task Force (CFATF), the Basel Committee's Offshore Group of Bank Supervisors, and the Commission Against Addiction and Illicit Drug Trafficking (CICAD) of the Organization of American States.

In 1998, GOP officials seized 11.771 metric tons of cocaine and 22 kilos of heroin. Although the lack of resources for counter-narcotics police remains a problem, with USG assistance, the facilities and equipment of the Panamanian National Maritime Service have been upgraded, facilitating the highest level of cooperation on maritime interdiction in the region. Maritime operations included several shiprider operations and numerous occasions of information sharing and cooperation on maritime drug interdiction.

Highest priority in the coming year will be signing a maritime counter-narcotics agreement, achieving greater success in prosecuting money launderers, expanding money laundering legislation to include the profits of all crimes, and increasing interdiction capabilities of the Panamanian counter-narcotics police.

Paraguay

Up to 40 metric tons of primarily Bolivian cocaine are estimated to transit Paraguay annually, en route through Argentina and Brazil to the United States, Europe and Africa. Paraguay is also a source country for high-quality marijuana. Significant money laundering occurs, but it is unclear what portion is drug-related.

In 1998, Paraguay signed a new bilateral extradition treaty with the United States that includes extradition of nationals. Modest improvements in counter-narcotics performance were achieved after the inauguration of the Cubas administration in August, such as the seizure of 215 kilograms of cocaine (more than the previous two years combined) and arrests of numerous low-level narcotics traffickers.

However, the Government of Paraguay (GOP) failed to accomplish the majority of the agreed-upon counter-narcotics goals for 1998 in a manner sufficient for full certification. Paraguay did not implement its national drug control strategy through effective investigations leading to the arrest and prosecution of major drug traffickers, corrupt officials and their associates; drafted, but did not pass a revised anti-drug statute which includes provisions authorizing controlled deliveries and undercover operations, and criminalizes drug-related conspiracy; failed to effectively implement the new money-laundering statute; and failed to develop an effective anti-drug and organized crime investigative and operational capability for the tri-border area. In part, these shortcomings stem from the country having been distracted by the May elections and later by continued political turmoil over the status of former Army Commander, and unsuccessful 1996 coup plotter, Lino Oviedo.

Denial of certification would, however, cut off assistance programs designed to meet the priority USG goal of strengthening Paraguay's democratic institutions and civil-military relations. This would reduce USG support for Paraguay's democracy at a time when it is being tested by conflict

between the executive branch and the legislative and judicial branches, and calls by some Paraguayans for extraconstitutional measures. Denial of certification would also jeopardize ongoing cooperation and assistance programs with the GOP against other key areas such as intellectual property piracy and terrorism. Moreover, vital national interests certification would help promote the political will and positive action against narcotics trafficking that we continue to seek from the new Cubas administration.

The risks posed to the totality of U.S. interests (i.e., promoting democracy, cooperation against intellectual piracy and continued counter-terrorism cooperation) by a cutoff of bilateral assistance outweigh the risks posed by GOP's failure to cooperate fully with the USG, or to take fully adequate steps to combat narcotics on its own.

For 1999, Paraguayan counter-narcotics and anti-money laundering institutions need to be strengthened and given independence from political institutions and intrigue. With strong civilian leadership and cooperation among the President, congress and the courts, as well as adequate resources and legal authorities, the GOP could achieve all of its stated goals.

Peru

Peru achieved a 26 percent decline in coca cultivation in 1998, yielding a total reduction of 56 percent since 1995. Eradication of illegal coca cultivation reached an all-time record of 7,825 hectares, nearly doubling the Government of Peru (GOP) target goal of 4,000. In terms of hectarage, an estimated 51,000 hectares of coca cultivation remains, down from an estimated 115,300 hectares in 1995. In the past two years, a strong law enforcement program focused on trafficking organizations and transportation infrastructure, combined with an efficient coca eradication program, led to a collapse in coca leaf prices. The reduction in coca leaf prices prompted greater numbers of farmers to accept the economic alternatives to coca offered by the USG-Peru alternative development project, which continued to expand in 1998. However, coca leaf prices began to rise throughout Peru in August. This trend may reflect multiple factors, including new transportation methods, new markets for Peruvian drugs, natural market forces, and possibly increased cocaine hydrochloride (HCl) production in Peru.

As traffickers have adapted and developed new smuggling methods on Peru's rivers, land borders and maritime routes, Peruvian counter-narcotics agencies, the Peruvian National Police (PNP) and the Peruvian Coast Guard established several riverine counter-narcotics bases and increased resources for riverine operations. Cooperating with U.S., Colombian and Brazilian law enforcement personnel, PNP exchanged counter-narcotics intelligence and participated in joint law enforcement operations in the Amazonian tri-border area. The PNP, working in close cooperation with U.S. and other Andean counter-narcotics agencies, also pursued and arrested major drug trafficking organizations with both U.S. and international cocaine trafficking connections.

The successful ''airbridge denial'' program has significantly shaped trafficking patterns in Peru and has caused the traffickers to develop alternative methods of transport to export drugs. While traffickers continue to fly large quantities of coca products out of Peru, particularly through Brazil, river and overland routes are increasingly used as intermediate steps in the export process. Overland routes, particularly north into Ecuador and south into Chile and Bolivia, are complementing maritime conveyance of drugs through Peru's coastal ports. The GOP is responding to the change by developing riverine and other counter-narcotics transit control strategies, using USG assistance and training.

In 1998, the joint USG–GOP alternative development program operated in five valleys of Peru to strengthen local governments, provide access to basic services and promote licit economic activities, thereby establishing the social and economic basis for the permanent elimination of coca. A

total of 239 communities have signed coca reduction agreements to reduce coca by approximately 16,300 hectares over a five-year period. Two hundred more agreements are expected to be signed by the end of 1998. Licit economic activities involving assistance for more than 25,000 hectares of licit crops are focused on rehabilitating coffee and cocao plantations abandoned during the ''coca boom.'' One hundred thirty kilometers of rural roads and four bridges have been constructed. Other donors are expected to provide additional resources for infrastructure development.

Donors participating in the November 1998 Peru Consultative Group in Brussels described Peru as a model of effective counter-narcotics policy, balancing interdiction with alternative development and demonstrating a willingness to make tough decisions required to achieve sustained illicit coca reduction. Of the $277 million for Peru's overall alternative development and demand reduction programs, approximately $127 million represents funding by non-USG donors. This support will enable the GOP to undertake major programs in six new coca-producing valleys.

Effective drug interdiction—especially strengthening ''airbridge denial''—and law enforcement remain the keys to maintaining coca leaf prices at unprofitable levels. The USG expects that low coca leaf prices will convince more farmers to abandon coca in favor of new crops or economic activities. Meanwhile, Peru's alternative development programs are designed to provide long-term, sustainable alternative economic opportunities which will discourage farmers from returning to coca cultivation. The GOP will need to increase security in areas still known for guerrilla activity and undertake a strong counter-narcotics effort to keep traffickers from interfering with alternative development efforts. Internal drug consumption is likely to increase, and the USG will continue to support the GOP's efforts to counter this growing problem.

Taiwan

Given its role as a regional transportation/shipping hub in Asia, Taiwan is considered a significant transit point for drugs affecting the United States. Its geographical location also facilitates Taiwan nationals' involvement in international narcotics trafficking. Taiwan authorities make every effort to restrict this role, however, and routinely cooperate with U.S. enforcement activities.

Although Taiwan's aggressive domestic counter-narcotics program continued, with an increase of 19 percent in the number of new cases investigated and the implementation of new counter-narcotics laws, the amount of drugs seized and the number of prosecutions in 1998 decreased substantially from 1997. Taiwan cannot be a party to the 1988 UN Drug Convention because it is not a UN member. Nevertheless, over the last several years, Taiwan passed and implemented laws unilaterally bringing it into compliance with the Convention's goals and objectives. Taiwan also continued to expand counter-narcotics cooperation with U.S. law enforcement agencies through the American Institute in Taiwan.

Taiwan is not a significant cultivator or producer of illegal narcotics, but the illegal consumption of both heroin and methamphetamine remains a serious internal social problem. Amphetamines were produced in Taiwan in the past, but aggressive police efforts in 1998 and shifting market forces within the drug trade have forced producers to move their facilities to Mainland China. About 68 percent of the methamphetamine and 42 percent of the heroin seized on Taiwan during the first eleven months of 1998 originated in Mainland China.

Kaohsiung Harbor, the world's third busiest container port, is a major center for shipping to and from Southeast Asian ports. Monitoring this traffic for smuggling is a difficult task. A significant percentage of the nearly six million TEU (twenty foot equivalent unit) shipping containers at Kaohsiung port last year were ''in transit'' and, according to standard inter-

national practice, not subject to routine inspection by Taiwan Customs. Of the nearly 3 million containers legally entering and leaving Taiwan, Customs examined approximately 2 percent—a percentage comparable to that of other ports.

Thailand

Throughout 1998, despite a serious domestic methamphetamine abuse problem and deep government budget cutbacks, Thailand continued its long tradition of cooperation with the United States and the international community in narcotics law enforcement and drug control efforts. Thailand cemented its role as a leader in regional drug control programs by co-establishing the International Law Enforcement Academy (ILEA) with the United States in Bangkok. In 1998, legal and judicial cooperation also became more streamlined, additional defendants arrested in 1994's Operation ''Tiger Trap'' were extradited to the United States, and new cooperative law enforcement programs were initiated. Extradition to the United States of Thai citizens and residents who claim Thai citizenship continued to expand.

The Royal Thai Government (RTG) has one of the most effective narcotic crop control programs in the world. USG analysts estimated that Thailand's opium production in the 1998 growing season declined 36 percent to 16 metric tons. Cultivation decreased by 18 percent. Reflecting trends of previous years, opium farmers continue to cultivate smaller, more isolated fields and engage in multiple cropping to avoid eradication. A drought last year adversely affected the production of all agricultural commodities, including opium. The 1999 eradication campaign was inaugurated in mid-November 1998. Concentrated efforts will be necessary to destroy the poppy before it can be harvested. Activities related to heroin production, such as the refining of raw opium into morphine base, continued in northern border areas where drug producers often combined heroin operations with the manufacture of methamphetamine.

Thailand has yet to become a party to the 1988 UN Drug Convention due to its lack of anti-money laundering legislation. A draft bill is currently in a legislative committee where differences over the types of predicate crimes covered are being debated. The RTG remains committed to the passage of a law with as broad application as possible. Seizures and court actions under the asset seizure law continued. In 1998, with DEA support, the Thai Police established the first in a series of specially trained narcotics law enforcement units to target major trafficking groups. RTG programs aimed at treatment, epidemiology of substance abuse, and demand reduction were maintained and continue to be effective.

Venezuela

Venezuela is a major transit country for over 100 metric tons of cocaine shipped annually from South America to the United States and Europe. Venezuela is also a transit country for chemicals used in the production of drugs in source countries. Venezuela is not a significant producer of illegal drugs, but small-scale opium poppy cultivation occurs near the country's border with Colombia.

In recent years, Venezuela's relatively vulnerable financial institutions and other sectors of the government have become targets for money laundering of illegal drug profits. U.S. Customs Operation ''Casablanca'' identified Venezuela as one of the routes by which Colombian narco-traffickers launder drug proceeds through Venezuelan banks. Following arrests in May of Venezuelan bankers implicated in this case, the Government of Venezuela (GOV) expressed concern over the vulnerability of its financial sector and indicated a willingness to cooperate with the USG on follow-up investigations.

In 1998, Venezuela sustained its efforts to combat narcotics trafficking and consumption. The National Anti-Drug Commission was instrumental

in coordinating better implementation of existing legislation and lobbying for new, tougher counter-narcotics legislation.

Actions by the GOV to intensify counter-narcotics efforts included: programs to implement a major reform of the judicial system due to take effect in July 1999; establishment of a central Financial Intelligence Unit; adoption of a unified regulatory system for chemical precursors; and passage of a new Customs law. Regrettably, efforts to gain passage of a Comprehensive Anti-Organized Crime bill were unsuccessful when the senate failed to pass the bill before congress adjourned for elections.

The Venezuelan military continued cooperation with the USG in an aggressive campaign against small-scale opium cultivation that occurs in the Sierra de Perija area near Venezuela's northern border with Colombia. Two eradication operations in this area conducted in 1998 reduced opium cultivation to less than 50 hectares.

In October 1998, the GOV moved to reorganize the customs sector—a major element in controlling narcotics smuggling through ports and airports. The reform addresses all aspects of customs procedures and is expected to result in better control measures.

Corruption in law enforcement and the judicial system continues to be a major problem. The GOV's judicial reform program is designed to reduce the opportunities for corruption in the judicial sector. Venezuela's new President, Hugo Chavez Frias, has included fighting corruption and combating drug transit as priorities for his new administration.

Vietnam

Narcotics flow into Vietnam from drug-producing areas in Burma, Thailand, Laos, and China along Vietnam's long mountainous borders. Its location close to the ''Golden Triangle'' renders Vietnam an important transit route for heroin and more recently for amphetamines. Drugs entering the country are used locally and transshipped to other destinations. Increased availability of heroin and methamphetamine has fueled a sharp increase in domestic drug abuse.

Trafficking through Vietnam continued at a high level in 1998, and may be increasing, but has been accompanied by a steady increase in arrests. Constant vigilance is necessary to assure corruption does not make the problem worse. The country is poor and suffers from a growing problem of trafficking, especially to school-aged children. Within the constraints of its limited resources, the Government of the Socialist Republic of Vietnam (GOSRV) has endeavored to stem the flow of narcotic drugs to its own population and to work cooperatively with the world community, including the United States, in the counter-narcotics effort.

Opium poppy cultivation appears to have declined in 1998, after an increase in 1997. In 1998, Vietnam began staffing its Drug Control Committee secretariat and approved a drug control action plan. Vietnam is highly supportive of bilateral and international cooperation to stem the flow of drugs into the country and sponsored two international conferences in Hanoi during the year. GOSRV also sent capable delegations to other international conferences.

The USG and the GOSRV are expanding bilateral cooperation, including negotiating a counter-narcotics agreement and exchanging information on drug trafficking cases. The DEA will open an office in Hanoi in 1999.

Vietnam is a party to the 1988 UN Drug Convention, as well as the 1961 UN Single Convention and its 1972 Protocol, and the 1971 UN Convention on Psychotropic Substances.

[FR Doc. 99–5668
Filed 3–5–99; 8:45 am]
Billing code 4710–10–M

federal register

Monday
March 8, 1999

Part XIV

Department of Agriculture

Agricultural Marketing Service

7 CFR Parts 916 and 917

Nectarines and Peaches Grown in California; Revision of Handling Requirements for Fresh Nectarines and Peaches; Proposed Rule

DEPARTMENT OF AGRICULTURE

Agricultural Marketing Service

7 CFR Parts 916 and 917

[Docket No. FV99–916–2 PR]

Nectarines and Peaches Grown in California; Revision of Handling Requirements for Fresh Nectarines and Peaches

AGENCY: Agricultural Marketing Service, USDA.

ACTION: Proposed rule.

SUMMARY: This rule invites comments on revisions to the handling requirements for California nectarines and peaches by modifying the grade, size, maturity, and container marking requirements for fresh shipments of these fruits, beginning with 1999 season shipments. This rule would also authorize continued shipments of ''CA Utility'' quality nectarines and peaches during the 1999 season with an increased percentage of U.S. No. 1 nectarines and peaches in each container. This rule would enable handlers to continue shipping fresh nectarines and peaches meeting consumer needs in the interest of producers, handlers, and consumers of these fruits.

DATES: Comments must be received by March 29, 1999.

ADDRESSES: Interested persons are invited to submit written comments concerning this proposal. Comments must be sent to the Docket Clerk, Fruit and Vegetable Programs, AMS, USDA, P.O. Box 96456, room 2525–S, Washington, DC 20090–6456; Fax: (202) 720–5698; or E-mail: moabdocket__clerk@usda.gov. All comments should reference the docket number and the date and page number of this issue of the **Federal Register** and will be made available for public inspection at the Office of the Docket Clerk during regular business hours.

FOR FURTHER INFORMATION CONTACT: Terry Vawter, Marketing Specialist, or Kurt J. Kimmel, Regional Manager, California Marketing Field Office, Marketing Order Administration Branch, Fruit and Vegetable Programs, AMS, USDA, 2202 Monterey Street, suite 102B, Fresno, California 93721; telephone: (559) 487–5901, Fax: (559) 487–5906; or George Kelhart, Technical Advisor, Marketing Order Administration Branch, Fruit and Vegetable Programs, AMS, USDA, room 2525–S, P.O. Box 96456, Washington, DC 20090–6456; telephone: (202) 720–2491, Fax: (202) 720–5698. Small businesses may request information on compliance with this regulation, or obtain a guide on complying with fruit, vegetable, and specialty crop marketing agreements and orders by contacting Jay Guerber, Marketing Order Administration Branch, Fruit and Vegetable Programs, AMS, USDA, P.O. Box 96456, room 2525–S, Washington, DC 20090–6456; telephone: (202) 720–2491; Fax: (202) 720–5698; or E-mail: Jay__N__Guerber@usda.gov. You may view the marketing agreement and order small business compliance guide at the following web site: http://www.ams.usda.gov/fv/moab.html.

SUPPLEMENTARY INFORMATION: This proposal is issued under Marketing Agreements Nos. 124 and 85, and Marketing Order Nos. 916 and 917 (7 CFR parts 916 and 917) regulating the handling of nectarines and peaches grown in California, respectively, hereinafter referred to as the ''orders.'' The marketing agreements and orders are effective under the Agricultural Marketing Agreement Act of 1937, as amended (7 U.S.C. 601–674), hereinafter referred to as the ''Act.''

The Department of Agriculture (Department) is issuing this rule in conformance with Executive Order 12866.

This proposal has been reviewed under Executive Order 12988, Civil Justice Reform. This rule is not intended to have retroactive effect. This rule will not preempt any State or local laws, regulations, or policies, unless they present an irreconcilable conflict with this rule.

The Act provides that administrative proceedings must be exhausted before parties may file suit in court. Under section 608c(15)(A) of the Act, any handler subject to an order may file with the Secretary a petition stating that the order, any provision of the order, or any obligation imposed in connection with the order is not in accordance with law and request a modification of the order or to be exempted therefrom. A handler is afforded the opportunity for a hearing on the petition. After the hearing the Secretary would rule on the petition. The Act provides that the district court of the United States in any district in which the handler is an inhabitant, or has his or her principal place of business, has jurisdiction to review the Secretary's ruling on the petition, provided an action is filed not later than 20 days after the date of the entry of the ruling.

This proposal invites comment on revisions to the handling requirements currently prescribed for shipments of fresh nectarines and peaches under the orders.

Under the orders, grade, size, maturity, and container and pack requirements are established for fresh shipments of California nectarines and peaches. Such requirements are in effect on a continuing basis. The Nectarine Administrative Committee (NAC) and the Peach Commodity Committee (PCC) (committees), which are responsible for local administration of the orders, met on December 2, 1998, and unanimously recommended that these handling requirements be revised for the 1999 season, which begins April 1, with one exception. The Nectarine Administrative Committee voted 4 in favor and 3 opposed to continuing shipments of ''CA Utility'' quality nectarines with an increased percentage of U.S. No. 1 nectarines in boxes of ''CA Utility'' quality nectarines; and the Peach Commodity Committee voted 7 in favor and 4 opposed to continuing shipments of ''CA Utility'' quality peaches with an increased percentage of U.S. No. 1 peaches in boxes of ''CA Utility'' quality peaches. The nectarine order requires six concurring votes on recommendations for regulations and the peach order requires nine concurring votes on recommendations for regulations. As a result, these two votes did not meet the minimums prescribed to constitute official recommendations to the Secretary. Nectarine and peach handlers have been authorized to ship ''CA Utility'' quality fruit since the 1996 season, and such shipments have comprised about two percent of total shipments. Such fruit is mature but of a lower quality than U.S. No. 1 fruit and is acceptable in some markets. If shipments of ''CA Utility'' quality fruit are not permitted, only higher-quality fruit could be shipped.

Because prior season experience shows that the authority to ship ''CA Utility'' quality fruit provided additional marketing opportunities for handlers, the Department is proposing continuing to allow such shipments during 1999. Inviting written comments on this matter will give all interested persons the opportunity to submit detailed information which can be used to help the Department decide on the best course of action.

The changes would: (1) Require that maturity and ''CA Utility'' quality marking of containers be a minimum of ⅜ inch in height; (2) require that experimental containers and 22G containers be marked with both the size and the count of fruit contained in the package; (3) require that master containers of consumer packages be marked with the minimum size fruit contained in the consumer packages; (4) add weight counts for early-season, mid-

season, and late-season varieties; (5) continue shipments of ''CA Utility'' quality nectarines and peaches, and increase the percentage of U.S. No. 1 nectarines and peaches permitted in containers of ''CA Utility quality'' fruit from the current 30 percent to 40 percent, provided that the additional 10 percent of U.S. No. 1 fruit in the container has non-scoreable blemishes; and (6) revise varietal maturity and size requirements to reflect recent changes in growing conditions.

The committees meet prior to and during each season to review the rules and regulations effective on a continuing basis for California nectarines and peaches under the orders. Committee meetings are open to the public, and interested persons may express their views at these meetings. The Department reviews committee recommendations and information, as well as information from other sources, and determines whether modification, suspension, or termination of the rules and regulations would tend to effectuate the declared policy of the Act.

No official crop estimate was available at the time of the committees' meetings because the nectarine and peach trees are dormant. The committees will recommend a crop estimate at their meetings in early spring. However, preliminary estimates indicate that the 1999 crop will be somewhat larger in size but similar in characteristics to the 1998 crop which totaled 16,916,900 boxes of nectarines and 18,202,300 boxes of peaches.

Container Marking Requirements

Sections 916.52 and 917.41 of the orders for nectarines and peaches, respectively, authorize container marking requirements. Requirements for container markings are specified in §§ 916.350 and 917.442 of the orders' rules and regulations. Container marking requirements include marking of the commodity and variety (e.g., July Red Nectarines), the size of the fruit in the box (e.g., 80 size), the net weight, the maturity (either U.S. Mature (US MAT), or California Well-Matured (CA WELL MAT)), or the quality (i.e., ''CA Utility''), on each container of nectarines and peaches.

This proposal would revise paragraphs (a)(3) of §§ 916.350 and 917.442 in the orders' rules and regulations to require that maturity markings on containers be in letters at least ⅜ inch in height. This proposal would also revise the current quality marking requirement in paragraphs (d) of §§ 916.350 and 917.442 for ''CA Utility'' from a minimum of ¾ inch in height to a minimum of ⅜ inch in height. These proposed changes would standardize marking requirements on containers by specifying a minimum lettering height of ⅜ inch for both maturity and quality markings. This is intended to assure that all containers shipped by nectarine and peach handlers are similarly marked.

The committees unanimously recommended that the lettering indicating fruit maturity and quality on containers be standardized at a minimum height of ⅜ inch. The ⅜ inch minimum would be appropriate, given the number of other markings, required or voluntary, on each container. Such lettering is also readily legible to the Federal or Federal-State Inspection Service (Inspection Service) and compliance officers representing the committees. The ⅜ inch minimum letter height standard would also eliminate any confusion among handlers about which size is required for markings by reducing the currently-required 3/4 inch minimum marking for ''CA Utility'' to a minimum ⅜ inch in height and specifying similar requirements for maturity markings.

Sections 916.350 and 917.442 of the orders' rules and regulations also require containers to be marked with the size and/or number of pieces of fruit in the container (count).

In commonly-used containers such as the No. 22D and the No. 32 boxes the configurations of fruit results in the fruit size and count being the same. The No. 22G standard lug box, however, has a different shape which results in a different tray-pack configuration than those of the No. 22D and the No. 32 boxes. The shape of the No. 22G container also imposes tighter limits on the number of fruit that can be tray packed in it than the No. 22D and No. 32 boxes, and the fruit size and count are not the same. Thus, handlers using it should be required to indicate the number of fruit in the container as well as the fruit size, since the fruit size and count are not always the same in this container. This is also true for some experimental packages, as well, since there are no standardized pack configurations for experimental packages, and, thus, no standardized basis for comparison against the No. 22D and No. 32 boxes is possible. Experimental containers, in addition to the No. 22G standard lug box, would be required to be marked with both the size and the count of fruit contained in the package.

To lessen the chances of confusion in the marketplace with such containers, the committees unanimously recommended requiring that the No. 22G standard lug box and experimental containers be marked with both the size and count of the fruit contained in the package.

To implement this change, paragraphs (a)(4)(i) and (a)(4)(ii) of § 916.350 would be revised to add the requirement that experimental containers be marked with both the size and count of nectarines contained within the containers. Paragraph (a)(4)(ii) of § 917.442 would also be revised to add the requirement that the No. 22G standard lug box be marked with both the size and count of peaches contained within the container.

Sections 916.350 and 917.442 also specify markings that are required on master containers of consumer packages, consumer packages within master containers, and consumer packages not within master containers. Master containers must be marked with the net weight of each consumer package, the number of individual consumer packages, the size description of the fruit in each consumer package, and the name and address of the shipper. Consumer packages within the master containers must be marked with the name and address of the shipper and the net weight of the container. When the consumer package is not in a master container, the consumer package must also be marked with the number of fruit in the package, the name of the variety, if known, and the maturity of the fruit in the package.

Authority for consumer packages permits handlers to pack and ship nectarines and peaches in other types of containers demanded by their customers. The fruit packages are tailored to the requirements of the buyer, and the buyer may require the handler to pack consumer packages of several different sizes of fruit within the master container. For example, a master container may contain five consumer packages. One consumer package may contain size 64 nectarines, while two other consumer packages may contain size 70 nectarines. The remaining two consumer packages may contain size 60 nectarines. In this example, each consumer package contains the same size nectarines, but the master container contains consumer packages with different nectarine sizes.

The committees unanimously recommended that such size variations from consumer package to consumer package within a master container should be indicated on the master container. The committees determined that the marking on the master container should accurately and clearly reflect the minimum size contained within the package containing the smallest size fruit and that the master container contains consumer packages with larger

sized fruit. Thus, a master container would be marked ''Minimum size 60 and larger'' or ''Minimum size 96 and larger,'' when the consumer packages in the master container contain different fruit sizes. This is intended to provide more accurate information to the buyers of the fruit.

Thus, paragraph (a)(8)(i) of § 916.350 and paragraph (a)(9)(i) of § 917.442 of the orders' rules and regulations would be revised to require that the markings on master containers containing consumer packages of different sizes of nectarines and peaches specify the smallest size in the packages, and, when applicable, indicate that the individual packages include larger-sized fruit.

Pack Regulations

Container markings based on weight-count standards are also specified in Tables 1 and 2 of paragraphs (a)(4)(iv) in §§ 916.350 and 917.442 of the orders' rules and regulations. The purpose of the weight-count standards is to establish the maximum number of nectarines or peaches in a 16-pound sample for each individual size designation. To facilitate the repacking of nectarines and peaches from tray-packs into volume-filled containers, the committees routinely conduct tests to determine the optimum weight-count standards for early-season, mid-season, and late-season nectarines and peaches, respectively, based on the sizes of nectarines and peaches in tray-packs. Tray-packs fit into standard nectarine and peach boxes and have molded cavities for the fruit to sit in. Trays with different cavity sizes are used, depending upon the size of the fruit being packed. Handlers have traditionally used tray-packs to securely package nectarines and peaches. However, some handlers have moved away from tray-packed configurations toward volume-filled configurations in recent years.

Handlers of nectarines and peaches have informed the committees that some larger sizes of nectarines and peaches are increasingly being converted from tray-packs to volume-filled packs. Since volume-filled containers are less costly to pack and market demands change, handlers have opted to pack a greater proportion of the larger-sized, high-quality fruit in volume-filled containers.

Size studies were performed by the NAC and PCC in 1994 and 1995, and were used as a basis for changing some of the weight counts. Because nectarines and peaches of size 44 were not packed in volume-filled containers, no weight counts were published for size 44 nectarines and peaches at that time. As the practice of converting tray-packed containers of size 44 nectarines and peaches to volume-filled containers has increased, the need to publish a weight-count standard also increased.

The committees have used the previously-conducted size studies to determine the weight-count standards for size 44 nectarine and peach sizes for inclusion in the weight-count standards. The NAC has determined that the weight-count standard for size 44 should be a maximum of 33 pieces for early-season nectarines and a maximum of 30 pieces of mid-season and late-season nectarines in a 16-pound sample. The PCC has determined that the weight count standard for size 44 should be a maximum of 33 pieces of fruit in a 16-pound sample for all peach varieties.

Therefore, the NAC and PCC unanimously recommended modifications to the weight-count standards for nectarines and peaches by the addition weight-count standards for size 44 nectarines and peaches. To implement such a change, Tables 1 and 2 of paragraphs (a)(4)(iv) in §§ 916.350 and 917.442 of the regulations are proposed to be modified by adding size 44 and the applicable weight-count standard of a maximum of 33 pieces of early-season nectarines and all peaches, and a maximum of 30 pieces of mid-season and late-season nectarines in a 16-pound sample. These changes would permit handlers to more easily convert tray-packed nectarines and peaches to volume-filled containers, decrease the handling costs associated with that conversion, and meet marketing demands.

Quality Requirements

Sections 916.52 and 917.41 of the orders authorize the establishment of grade and quality requirements for nectarines and peaches, respectively. Prior to the 1996 season, § 916.356 of the order's rules and regulations required nectarines to meet a modified U.S. No. 1 grade. Specifically, nectarines were required to meet U.S. No. 1 grade requirements, except there was a slightly tighter requirement for scarring and a more liberal allowance for misshapen fruit. Under § 917.459 of the order's rules and regulations prior to the 1996 season, peaches were also required to meet the requirements of a U.S. No. 1 grade, except there was a more liberal allowance for open sutures that were not ''serious damage.''

Under §§ 916.356 and 917.459, shipments of ''CA Utility'' quality nectarines and peaches have been permitted since the 1996 season, contingent upon such containers meeting certain relaxed quality requirements. ''CA Utility'' quality is a lower-quality fruit than U.S. No. 1. Currently, the requirement for containers of ''CA Utility'' nectarines and peaches provides that not more than 30 percent of the fruit in any container meet or exceed the requirements of U.S. No. 1. This proposal would allow handlers to continue shipping ''CA Utility'' fruit during the 1999 season, and increase the 30 percent limitation to not more than 40 percent except that the additional 10 percent of the U.S. No. 1 fruit must have non-scoreable blemishes.

Containers marked ''CA Utility'' must be inspected by the Inspection Service and certified as meeting the ''CA Utility'' quality requirements. Part of the inspection process is to evaluate the fruit in accordance with the requirements of the U.S. Standards for Grades of Nectarines, the U.S. Standards for Grade of Peaches, (Standards) and the orders. In conducting inspections, inspectors are required to evaluate various blemishes. Some blemishes are serious or severe enough to be ''scored'' against the fruit as defects which are damaging to the grade of the fruit, while some other blemishes are not serious or severe enough to affect the grade of the fruit. In the first instance, the blemishes are termed ''scoreable'' defects; and, in the second instance, the blemishes are termed ''non-scoreable'' defects. Some members of the committees supported a requirement that such non-scoreable blemishes must be present on the additional 10 percent of the fruit grading U.S. No. 1 in boxes marked ''CA Utility'' during the 1999 season.

A similar requirement was in place during the latter part of the 1998 season. At that time, unseasonal summer rains had caused increased ''non-scoreable'' defects which detracted from the overall appearance of U.S. No. 1 nectarines and peaches for some handlers. An interim final rule was published on September 22, 1998 (63 FR 50461), and a final rule was published on November 9, 1998 (63 FR 60209).

While containers marked ''CA Utility'' fruit are subject to relaxed quality requirements, all other grade and marking requirements of the orders must be met.

At the committee meetings on December 2, 1998, at least one handler complained that fruit with non-scoreable blemishes was unsightly in the type of U.S. No. 1 box he offered to the marketplace and to his customers. His preference was to place such fruit in boxes marked ''CA Utility.'' The current limitation of not more than 30 percent U.S. No. 1 fruit in containers marked ''CA Utility'' caused the Inspection Service to determine that his ''CA

Utility'' containers were ''out of grade,'' because they contained more U.S. No. 1 fruit than permitted. For that reason, the handler was forced to remove the fruit from the ''CA Utility'' boxes, and either repack his U.S. No. 1 to include this fruit or discard the fruit. Therefore, the limitation of not more than 30 percent U.S. No. 1 in ''CA Utility'' quality containers became a hindrance and was eliminated by the September 22, 1998, rulemaking action.

A niche market exists for ''CA Utility'' quality fruit and an opportunity should be made available to market somewhat better quality. It was estimated by a handler of ''CA Utility'' quality fruit that the relaxation from not more than 30 percent U.S. No. 1 in the containers to not more than 40 percent provided that the additional 10 percent U.S. No. 1 in the containers has non-scoreable blemishes will increase shipments of ''CA Utility'' quality nectarines and peaches by approximately one-half of one percent. A majority of the members of both committees supported the change, because the change had been in effect at the end of the 1998 season. However, one committee member commented that there was little merit to adding one-half of one percent to the marketplace. Another indicated that perhaps a review of the entire grade structure would address the problem and did not advocate relaxing the percentage of U.S. No. 1 in ''CA Utility'' containers. A majority of the committee members present voted to relax the percentage from 30 percent U.S. No. 1 in containers marked ''CA Utility'' to 40 percent U.S. No. 1 provided that the additional 10 percent of the U.S. No. 1 had non-scoreable blemishes. The vote by the NAC was 4 in favor and 3 opposed, and the vote by the PCC was 7 in favor and 4 opposed. The nectarine order requires six concurring votes on regulatory recommendations, and the peach order requires nine concurring votes on regulatory recommendations. As a result, these two votes did not meet the minimums prescribed to constitute official recommendations to the Secretary.

Because prior seasons' experience shows that the authority to ship ''CA Utility'' quality fruit provided additional marketing opportunities for handlers, the Department is proposing continuing to allow such shipments during 1999. Inviting written comments on this matter will give all interested persons the opportunity to submit detailed information which can be used to help the Department decide on the best course of action on continuing to allow such shipments and on the proposed standards for ''CA Utility'' quality fruit.

Historically, shipments of ''CA Utility'' nectarines represented 1.1 percent of all nectarine shipments, or approximately 210,000 boxes in 1996. In 1997, shipments of ''CA Utility'' nectarines represented 1.1 percent of all nectarine shipments, or approximately 230,000 boxes. In 1998, shipments of ''CA Utility'' nectarines represented 4.5 percent of all nectarine shipments, or approximately 760,000 boxes. Shipments of ''CA Utility'' peaches represented 1.9 percent of all peach shipments, or 366,000 boxes in 1996. In 1997, shipments of ''CA Utility'' peaches represented 1.0 percent of all peach shipments, or approximately 217,000 boxes. In 1998, shipments of ''CA Utility'' peaches represented 3.3 percent of all peach shipments, or approximately 602,000 boxes.

For these reasons, the Department proposes to allow continued shipments of ''CA Utility'' quality nectarines and peaches for the 1999 season with an increase in the percentage of U.S. No. 1 fruit permitted in each container. Paragraphs (d) of §§ 916.350 and 917.442, and paragraphs (a)(1) of §§ 916.356 and 917.459 are proposed to be revised to permit shipments of nectarines and peaches meeting revised ''CA Utility'' quality requirements during the 1999 season.

Maturity Requirements

Both orders provide (in §§ 916.52 and 917.41) authority to establish maturity requirements for nectarines and peaches, respectively. The minimum maturity level currently specified for nectarines and peaches is ''mature'' as defined in the standards. Additionally, both orders'' rules and regulations provide for a higher, ''well matured'' classification. For most varieties, ''well-matured'' fruit determinations are made using maturity guides (e.g., color chips). These maturity guides are reviewed each year by the Shipping Point Inspection Service (SPI) to determine whether they need to be changed based on the most-recent information available on the individual characteristics of each variety.

These maturity guides established under the handling regulations of the nectarine and peach marketing orders have been codified in the Code of Federal Regulations as Table 1 to paragraphs (a)(1)(iv) of §§ 916.356 and 917.459, for nectarines and peaches, respectively. Currently, §§ 916.356 and 917.459 include both ''Table 1'' and ''Table 1 to Paragraphs (a)(1)(iv)''. ''Table 1'' is a duplicate of ''Table 1 to Paragraphs (a)(1)(iv)'' and would be removed from both sections. The latter table is referred to as ''Table 1'' in the remainder of this document.

The requirements in the 1999 handling regulation are the same as those which appeared in the 1998 handling regulation with a few exceptions. Those exceptions are explained below in this proposed rule.

Nectarines: Requirements for ''well-matured'' nectarines are specified in § 916.356 of the order's rules and regulations. As proposed, Table 1 to paragraph (a)(1)(iv) of § 916.356 would be revised to add a maturity guide for one nectarine variety. Specifically, SPI recommended adding a maturity guide for the Diamond Jewel nectarine variety at a maturity guide of L.

The NAC recommended these maturity requirements based on SPI's continuing review of individual maturity characteristics and identification of the appropriate maturity guide corresponding to the ''well-matured'' level of maturity for nectarine varieties in production.

Peaches: Section 917.459 of the order's rules and regulations specifies maturity requirements for fresh peaches being inspected and certified as being ''well matured.'' Table 1 to paragraph (a)(1)(iv) of § 917.459 would be revised to add maturity guides for three peach varieties. Specifically, SPI recommended adding the maturity guides for the Sweet Scarlet peach variety to be regulated at the J maturity guide, and the Lady Sue and Prima Gattie 8 peach varieties to be regulated at the L maturity guide.

The PCC unanimously recommended these maturity requirements based on SPI's continuing review of individual maturity characteristics and identification of the appropriate maturity guide corresponding to the ''well-matured'' level of maturity for peach varieties in production.

Size Requirements

Both orders provide authority to establish size requirements in §§ 916.52 and 917.41. Size regulations provide greater consumer satisfaction and encourage more repeat purchases by helping to ensure consumers are provided high-quality fruit. Size regulations, therefore, increase returns to producers and handlers by encouraging producers to leave fruit on the tree longer. The increased growing time not only improves the size of the fruit, but also increases its maturity. Increased size also results in an increased number of packed boxes of nectarines or peaches per acre. Varieties recommended for specific size regulation have been reviewed and such

recommendations are based on the specific characteristics of each variety. The NAC and PCC conduct studies each season on the range of sizes reached by the regulated varieties and determine whether revisions in the size requirements are appropriate.

Nectarines: Section 916.356 of the order's rules and regulations specifies minimum size requirements for fresh nectarines in paragraphs (a)(2) through (a)(9). As proposed, § 916.356 would be revised to establish variety-specific size requirements for five nectarine varieties that were produced in commercially-significant quantities of more than 10,000 packages for the first time during the 1998 season.

For example, one of the varieties recommended for addition to the variety-specific size requirements is the Sunny Red variety. Studies of the size ranges attained by the Sunny Red variety revealed that all of the nectarines of that variety met sizes in the ranges of sizes 30, 40, 50, 60, 70, and 80. While the size distribution peaked on the size 40, 100 percent of the fruit sized at a minimum of size 80.

A review of other varieties with the same harvesting period indicated that Sunny Red was also comparable to those varieties in its size ranges. Further, handlers known to ship the variety have provided additional supporting information for making this determination. Thus, the recommendation to place the Sunny Red nectarine variety in the variety-specific size regulation at a size 80 would be appropriate. Historical variety data such as this provides the NAC with the information necessary to recommend the appropriate sizes at which to regulate various nectarine varieties. In addition, producers of the varieties affected are invited to comment when such size recommendations are deliberated.

Thus, to implement such size requirements, the introductory text of paragraph (a)(6) in § 916.356 would be revised to include the Grand Pearl, Ruby Pearl, Sunny Red, Terra White, and 491–48 nectarine varieties.

This rule would also revise the introductory text of paragraph (a)(4) of § 916.356 to remove two nectarine varieties; and the introductory text of paragraph (a)(6) of § 916.356 would be revised to remove ten nectarine varieties from the variety-specific size requirements specified in this section because less than 5,000 packages of each of these varieties were produced during the 1998 season. As proposed, the introductory text of paragraph (a)(4) would be revised to remove the June Brite and Pacific Star nectarine varieties; and the introductory text of paragraph (a)(6) would be revised to remove the Flamekist, Flavor Grand, Late How Red, Moon Grand, Prima Diamond XVIII, Red Free, Red Fred, Ruby Grand, September Grand, and Summer Star nectarine varieties. Nectarine varieties removed from the nectarine variety-specific list become subject to the non-listed variety size requirements specified in paragraphs (a)(7), (a)(8), and (a)(9) of § 916.356.

The NAC recommended these changes in the minimum size requirements based on a continuing review of the sizing and maturity relationships for these nectarine varieties, and consumer acceptance levels for various sizes of fruit. This proposal would establish minimum size requirements for fresh nectarines consistent with expected crop and market conditions.

Peaches: Section 917.459 of the order's rules and regulations specifies minimum size requirements for fresh peaches in paragraphs (a)(2) through (a)(5), and paragraphs (b) and (c). Section 917.459 would be revised to establish variety-specific size requirements for six peach varieties that were produced in commercially-significant quantities of more than 10,000 packages for the first time during the 1998 season.

For example, one of the peach varieties recommended for addition to the variety-specific size requirements is the Morning Lord variety. Studies of the size ranges attained by the Morning Lord variety revealed that while it peaked on size 40, 100 percent of the fruit sized at a minimum of size 72.

A review of other varieties harvested during the same period indicated that Morning Lord was also comparable to those varieties in its size ranges. Further, discussions with handlers known to ship the variety provide additional information for making such determinations. Thus, the recommendation to place the Morning Lord peach variety in the variety-specific size regulation at a size 72 would be appropriate. Historical variety data such as this provides the PCC with the information necessary to recommend the appropriate sizes at which to regulate various peach varieties. In addition, producers of the affected varieties are invited to comment when such size recommendations are deliberated.

Accordingly, the introductory text of paragraph (a)(3) of § 917.459 of the order's rules and regulations is proposed to be revised to include the Super Rich peach variety; the introductory text of paragraph (a)(4) would be revised to include the Snow Dance peach variety; and the introductory text of paragraph (a)(6) would be revised to include the Morning Lord, Prima Peach 23, Yukon King, and 1–01–505 peach varieties.

Additionally, paragraphs (a)(5) and (a)(6) of § 917.459 would be revised to remove 12 peach varieties from the variety-specific size requirements specified in that section, because less than 5,000 packages of these varieties were produced during the 1998 season. Specifically, the introductory text of paragraph (a)(5) would be revised to remove the Honey Red and Sweet Gem peach varieties; and the introductory text of paragraph (a)(6) of § 917.459 would be revised to remove the August Sun, Autumn Crest, Autumn Gem, Belmont, Berenda Sun, Blum's Beauty, Fire Red, July Sun, Mary Anne, and Red Sun peach varieties.

Peach varieties removed from the variety-specific list become subject to the non-listed variety size requirements specified in paragraphs (b) and (c) of § 917.459.

The PCC recommended these changes in the minimum size requirements based on a continuing review of the sizing and maturity relationships for these peach varieties, and the consumer acceptance levels for various fruit sizes. This proposal would establish minimum size requirements for fresh peaches consistent with expected crop and market conditions.

Pursuant to requirements set forth in the Regulatory Flexibility Act (RFA), the Agricultural Marketing Service (AMS) has considered the economic impact of this action on small entities. Accordingly, AMS has prepared this initial regulatory flexibility analysis.

The purpose of the RFA is to fit regulatory actions to the scale of business subject to such actions in order that small businesses will not be unduly or disproportionately burdened. Marketing orders issued pursuant to the Act, and rules issued thereunder, are unique in that they are brought about through group action of essentially small entities acting on their own behalf. Thus, both statutes have small entity orientation and compatibility.

There are approximately 325 California nectarine and peach handlers subject to regulation under the orders covering nectarines and peaches grown in California, and about 1,800 producers of these fruits in California. Small agricultural service firms, which includes handlers, have been defined by the Small Business Administration (13 CFR 121.601) as those whose annual receipts are less than $5,000,000. Small agricultural producers are defined as

those having annual receipts of less than $500,000.

The NAC and PCC staff have estimated that there are less than 20 handlers in the industry who could be defined as other than small entities. If the average handler price received were $9.00 per box or box equivalent of nectarines or peaches, a handler would have to ship at least 555,000 boxes to have annual receipts of $5,000,000. Small handlers represent approximately 94 percent of the handlers within the industry. In addition, the NAC and PCC staff estimates that there are approximately 400 producers who could be defined as other than small entities. If the average producer price received were $6.00 per box or box equivalent for nectarines and $5.65 per box or box equivalent for peaches, producers would have to produce approximately 84,000 boxes or box equivalents of nectarines and approximately 89,000 boxes or box equivalents of peaches to have annual receipts of $500,000. Therefore, small producer entities represent approximately 78 percent of the producers within the industry. For those reasons, a majority of the handlers and producers may be classified as small entities.

Under §§ 916.52 and 917.41 of the orders, grade, size, maturity, and container and pack requirements are established for fresh shipments of California nectarines and peaches, respectively. Such requirements are in effect on a continuing basis. This proposed rule would revise current requirements to: (1) Require that maturity and ''CA Utility'' quality marking of containers be a minimum of ⅜ inch in height; (2) require that experimental containers and 22G containers be marked with both the size and the count of fruit contained in the package; (3) require that master containers of consumer packages be marked with the minimum size fruit contained in the consumer packages; (4) add weight counts for early-season, mid-season, and late-season varieties; (5) continue shipments of ''CA Utility'' quality nectarines and peaches, and increase the percentage of U.S. No. 1 nectarines and peaches permitted in containers of ''CA Utility quality'' fruit from the current 30 percent to 40 percent, provided that the additional 10 percent of U.S. No. 1 fruit in the container has non-scoreable blemishes; and (6) revise varietal maturity and size requirements to reflect recent changes in growing and marketing conditions.

In §§ 916.350 and 917.442 of the rules regulating nectarines and peaches several container marking requirements are specified. This proposal would specify that the maturity markings U.S. Mature (US MAT) and California Well-Matured (CA WELL MAT), and the markings for ''CA Utility'' quality must be in lettering a minimum of 3/8 inch in height. This would standardize the container markings for nectarines and peaches and would be consistent with those used on plum containers. Plum shipments are regulated under a State marketing order. Because nectarine and peach handlers frequently handle plums, as well, this would ensure consistency in marking requirements for all three commodities, which is expected to benefit handlers.

Sections 916.350 and 917.442 also specify markings that are required on master containers of consumer packages, consumer packages within master containers, and consumer packages not within master containers. Master containers must be marked with the net weight of each consumer package, the number of individual consumer packages, the size description of the fruit in each consumer package, and the name and address of the shipper. Consumer packages within the master containers must be marked with the name and address of the shipper and the net weight of the container. When the consumer package is not in a master container, the consumer package must also be marked with the number of fruit in the package, the name of the variety, if known, and the maturity of the fruit in the package.

In commonly used containers such as the No. 22D and the No. 32 boxes the configurations of fruit result in the fruit size and count being the same. The No. 22G standard lug box, however, has a different shape which results in a different tray-pack configuration than those of the No. 22D and the No. 32 boxes. The shape of the No. 22G container also imposes tighter limits on the number of fruit that can be tray packed in it than the No. 22D and No. 32 boxes; this causes fruit size and count to be different. Thus, handlers using that container should be required to indicate the number of fruit in the container as well as the fruit size, because the fruit size and count are not always the same in this container. Differences in count and size also occur with some experimental packages, as well, because there are no standardized pack configurations for experimental packages, and, thus, no standardized basis for comparison against the No. 22D and No. 32 boxes. Experimental containers, like the No. 22G standard lug box, would be required to be marked with both the size and the count of fruit contained in the package. This proposed requirement is expected to benefit consumers by ensuring that accurate size and count information is marked on packages of nectarines and peaches. This proposed requirement is not expected to have a negative impact on handlers, since the No. 22G standard lug box represents less than one percent of packages of nectarines and peaches shipped annually, and no experimental containers have been used for several years. This proposed requirement may also eliminate any confusion over fruit count and size experienced by buyers of nectarines and peaches.

Sections 916.350 and 917.442 also specify markings that are required on master containers of consumer packages, consumer packages within master containers, and consumer packages not within master containers. Master containers must be marked with the net weight of each consumer package, the number of individual consumer packages, the size description of the fruit in each consumer package, and the name and address of the shipper. Consumer packages within the master containers must be marked with the name and address of the shipper and the net weight of the container. When the consumer package is not in a master container, the consumer package must also be marked with the number of fruit in the package, the name of the variety, if known, and the maturity of the fruit in the package.

Consumer packages permit handlers to pack and ship nectarines and peaches in other types of containers demanded by their customers. In this case, packaging of fruit in small boxes or bags is tailored to the requirements of the buyer, whether by weight, size, or other factor. Because the buyer's requirements may be specific for the buyer's market, the handler may pack consumer packages of several different sizes of fruit within the master container. For example, a master container may contain five consumer packages. One consumer package may contain size 64 nectarines, while two other consumer packages may contain size 70 nectarines. The remaining two boxes may contain size 60 nectarines. The sizes of the fruit within the individual consumer packages are the same, but the master container may contain packages of different fruit sizes.

Several alternatives to this action were discussed at the Grade and Size Subcommittee meeting held on November 5, 1998. Some subcommittee members suggested that the master containers be marked with the largest size fruit in the consumer packages, such as ''Minimum size 80 and smaller.'' Others felt that option might be misleading to retailers and

consumers, and the alternative was rejected. Some subcommittee members suggested that the mixing of sizes in a master container should be discouraged. Others responded that such flexibility in packaging was responsive to the needs of some handlers, and those needs should be accommodated when possible, within the requirements of the orders.

The proposed change requiring master containers containing consumer packages of different fruit sizes to be marked identifying the existence of size variations, would permit handlers to continue to meet the demands of their buyers, but ensure that the fruit size within individual consumer packages contained within master containers is accurately and clearly marked on the master containers.

In §§ 916.350 and 917.442 of the orders' rules and regulations concerning nectarines and peaches, respectively, the use of pack regulations is specified. The NAC and PCC routinely conduct tests to determine the optimum weight-count standards for such early-season, mid-season, and late-season nectarines and peaches, respectively. Handlers of nectarines and peaches have informed the NAC and PCC that some larger sizes of nectarines and peaches are increasingly being converted from tray-packs to volume-filled packs. Since volume-filled containers are less costly to pack and market demands change, handlers have opted to pack a greater proportion of large, high-quality fruit in volume-filled containers. In 1998, lower market prices caused handlers to convert size 44 nectarines and peaches from tray-packed containers to volume-filled containers. However, there are currently no weight counts published for size 44 nectarines and peaches.

In 1994 and 1995, when the NAC and PCC last conducted tests to determine the number of fruit of various sizes that weighed 16 pounds, which is the standard inspection sample weight, size 44 nectarines and peaches were not usually packed in volume-filled containers. More commonly, size 44 nectarines and peaches were packed in tray-packs. As a result, weight count requirements were not needed by the industries for this size. As the practice of converting tray-packed containers of size 44 nectarines and peaches to volume-filled containers has increased, the NAC and PCC have referred to previously-conducted size studies and determined that weight-count standards for size 44 nectarines and peaches need to be included in the weight-count standards with those for the other sizes of fruit. The NAC and PCC have also determined that the correct weight-count standard for size 44 is a maximum of 33 pieces of early-season nectarines and all peaches, and a maximum of 30 pieces of mid-season and late-season nectarines in a 16-pound sample. This proposed addition of a weight-count standard for size 44 nectarines and peaches converted from tray-packed containers to volume-filled containers is expected to benefit producers and handlers by giving handlers increased flexibility in meeting marketing demands.

Therefore, the NAC and PCC unanimously recommended modifications to the weight-count standards for nectarines and peaches by the addition weight-count standards for size 44 nectarines and peaches. Such a change would modify Tables 1 and 2 of paragraphs (a)(4)(iv) in §§ 916.350 and 917.442 of the regulations by adding size 44 and the applicable weight-count standard of a maximum of 33 pieces of early-season nectarines and all peaches, and a maximum of 30 pieces of mid-season and late-season nectarines in a 16-pound sample. The change would permit handlers to more easily convert tray-packed nectarines and peaches to volume-filled containers. This proposal is expected to decrease the handling costs associated with such conversions, and permit handlers to better meet marketing demands.

In §§ 916.356 and 917.459 of the orders' rules and regulations concerning nectarines and peaches, respectively, shipments of ''CA Utility'' quality nectarines and peaches have been permitted since the 1996 season, contingent upon such containers meeting certain relaxed quality requirements. ''CA Utility'' quality is a lower-quality fruit than U.S. No. 1. Currently, the requirement for containers of ''CA Utility'' nectarines and peaches provides that not more than 30 percent of the fruit in any container meet or exceed the requirements of U.S. No. 1. This proposed relaxation would increase that limitation from 30 percent to not more than 40 percent provided that the additional 10 percent of the U.S. No. 1 has non-scoreable blemishes. This proposed relaxation is anticipated to benefit growers, handlers, and consumers.

Containers marked ''CA Utility'' must be inspected by the Inspection Service and certified as meeting the ''CA Utility'' quality requirements. Part of the inspection process is to evaluate the fruit in accordance with the requirements of Standards and the orders. In conducting inspections, inspectors are required to evaluate various blemishes. Some blemishes are serious or severe enough to be ''scored'' against the fruit as defects which are damaging to the grade of the fruit, while some other blemishes are either not serious or severe enough to affect the grade of the fruit. In the first instance, the blemishes are termed ''scoreable'' defects; and, in the second instance, the blemishes are termed ''non-scoreable'' defects. Some committee members supported increased percentages of U.S. No. 1 fruit in boxes of ''CA Utility'' quality nectarines and peaches provided that such non-scoreable blemishes are present on the additional 10 percent of the fruit grading U.S. No. 1 in boxes marked ''CA Utility.''

A niche market exists for ''CA Utility'' quality fruit and an opportunity should be made available to market somewhat better quality. It was estimated that the proposed relaxation from not more than 30 percent U.S. No. 1 to not more than 40 percent provided that the additional 10 percent U.S. No. 1 fruit in the containers has non-scoreable blemishes would increase shipments of ''CA Utility'' quality nectarines and peaches by one-half of one percent.

According to comments made at the committee meetings on December 2, 1998, a majority of the members of the committees supported allowing the use of ''CA Utility'' fruit during the 1999 season, and the change in quality requirements, because those requirements solved handler problems at the end of the 1998 season. One committee member, however, commented that there was little merit to adding one-half of one percent to the marketplace. Another indicated that perhaps a review of the entire grade structure would address the problem and did not advocate relaxing the percentage of U.S. No. 1 in ''CA Utility'' containers.

The committees considered several alternatives at the meetings. One alternative was to leave the percentage of U.S. No. 1 nectarines and peaches permitted in ''CA Utility'' unchanged. It was determined that alternative would not address the problem facing the industry. The NAC and PCC also considered reviewing the entire grade structure, but that alternative was considered a long-term project which could not be accomplished in enough time to address the problem for the 1999 season. Another alternative discussed was to limit the change to handlers operating under the Partners-In-Quality (PIQ) Program and allow those handlers to pack not more than 40 percent of U.S. No. 1 provided that the additional 10 percent of U.S. No. 1 has non-scoreable blemishes. Under the PIQ Program, handlers self-inspect their nectarines

and peaches against the minimum grade, size, quality, maturity, pack, and container marking requirements of the orders and the Standards, according to the procedures and requirements specified in their Inspection-Service-approved operation manuals.

Under the requirements of the program, PIQ handlers are required to meet the minimum grade, maturity, size, quality, container, and pack requirements on every container. A handler under conventional in-line inspection is required to meet the minimum grade, maturity, size, quality, container, and pack requirements on an entire lot of fruit, which is not as restrictive as meeting the requirements on every container. For example, under in-line inspection, a handler may present a lot of 1,000 containers of nectarines or peaches for inspection. The tolerance for misshapen nectarines is currently limited to 25 percent per lot. The variance in misshapen nectarines in containers within the lot could change from one container to another, provided that the average within the entire lot does not exceed 25 percent. For PIQ handlers, there is no opportunity to ''average within'' grade on lots of fruit; each container is graded on its own as though it were a lot. PIQ handlers, thus, face more rigorous requirements than handlers under conventional in-line inspection. This alternative would address PIQ handler concerns by providing them greater flexibility with regard to both U.S. No. 1 and ''CA Utility'' quality containers. However, this alternative was determined to favor a small percentage of the industry and was rejected.

Some members of the committees supported continued shipments of ''CA Utility'' quality nectarines and peaches during the 1999 season with a relaxation of the percentage from 30 percent U.S. No. 1 in containers marked ''CA Utility'' to 40 percent U.S. No. 1, provided that the additional 10 percent of the U.S. No. 1 has non-scoreable blemishes. They believed that the additional marketing opportunities provided by allowing handlers to ship such fruit were important to the industries.

Sections 916.356 and 917.442 of the orders' rules and regulations for nectarines and peaches, respectively, currently establish minimum maturity levels. This proposed rule would make adjustments to the ''well matured'' requirements for several varieties of nectarines and peaches. ''Well matured'' determinations are made using maturity guides (e.g., color chips). Such maturity guides provide producers, handlers, and SPI with objective tools for measuring the maturity of different varieties of nectarines and peaches. Such maturity guides are reviewed annually by SPI to determine the appropriate guide for each nectarine and peach variety. These adjustments reflect changes in the maturity patterns of nectarines and peaches as experienced over the previous seasons' inspections. Adjustments in the guides would ensure that fruit has met an acceptable level of maturity, thus ensuring consumer satisfaction while benefitting nectarine and peach producers and handlers.

Currently, in § 916.356 of the order's rules and regulations for nectarines and § 917.459 of the order's rules and regulations for peaches, minimum sizes for various varieties of nectarines and peaches are established. This proposed rule would make adjustments to the minimum sizes authorized for various varieties of nectarines and peaches for the 1999 season. Size regulations provide greater consumer satisfaction and encourage more repeat purchases. Repeat purchases and consumer satisfaction benefit producers and handlers alike. Such adjustments to minimum sizes of nectarines and peaches are recommended each year by the NAC and PCC based upon historical data, and producer and handler information regarding sizes which the different varieties attain.

The Department has not identified any relevant Federal rules that duplicate, overlap, or conflict with this rule. However, as previously stated, nectarines and peaches under the orders have to meet certain requirements set forth in the standards issued under the Agricultural Marketing Act of 1946 (7 U.S.C. 1621 through 1627). Standards issued under the Agricultural Marketing Act of 1946 are otherwise voluntary.

In addition, the committees' meetings were widely publicized throughout the nectarine and peach industries and all interested parties were invited to attend the meetings and participate in committee deliberations on all issues. These meetings are held annually in late Fall. Like all committee meetings, the December 2, 1998, meetings were public meetings and all entities, both large and small, were able to express views on these issues. The committees themselves are composed of producers. Finally, interested persons are invited to submit information on the regulatory and informational impacts of this action on small businesses.

The NAC and PCC discussions were prompted by a recommendation of the Grade and Size Subcommittee, which met on November 5, 1998, to discuss issues related to minimum grades and sizes for nectarines and peaches shipped under the orders. Among the issues discussed were possible changes to the requirements for: (1) ''CA Utility'' quality nectarines and peaches, (2) container markings, (3) maturity markings, (4) quality requirements, and (5) size requirements. The meeting was a public meeting and interested persons were invited to express their views.

A 20-day comment period is provided to allow interested persons to respond to this proposal. Twenty days is deemed appropriate because this rule should be in place as soon as possible (the 1999 season begins April 1) to provide growers and handlers adequate time to make needed adjustments in cultural and handling practices. All written comments timely received will be considered before a final determination is made on this matter.

List of Subjects

7 CFR Part 916

Marketing agreements, Nectarines, Reporting and recordkeeping requirements.

7 CFR Part 917

Marketing agreements, Peaches, Pears, Reporting and recordkeeping requirements.

For the reasons set forth in the preamble, 7 CFR parts 916 and 917 are proposed to be amended as follows:

1. The authority citation for 7 CFR parts 916 and 917 continues to read as follows:

Authority: 7 U.S.C. 601–674.

PART 916—NECTARINES GROWN IN CALIFORNIA

2. Section 916.350 is amended by:

a. Revising paragraph (a)(3);

b. Revising paragraphs (a)(4)(i) and (a)(4)(ii);

c. Revising Tables 1 and 2 in paragraph (a)(4)(iv);

d. Revising paragraph (a)(8)(i); and

e. Revising paragraph (d) to read as follows:

§ 916.350 California nectarine container and pack regulation.

(a) * * *

(3) Each package or container of nectarines, except for consumer packages in master containers and consumer packages mailed directly to consumers, shall bear on one outside end in plain sight and in plain letters at least 3/8 inch in height the words ''U.S. Mature'' or ''US MAT'' if such nectarines are mature as defined in the United States Standards for Grades of Nectarines (7 CFR 51.3145 through 51.3160); or may instead bear on one outside end in plain sight and in plain letters at least 3/8 inch in height the

words ''California Well Matured'' or ''CA WELL MAT'' if such nectarines are well matured as defined in § 916.356.

(4) * * *

(i) The size of nectarines packed in molded forms (tray-packs) in the No. 22D and the No. 32 standard boxes, or consumer packages; No. 22G standard lug boxes, experimental containers; or the No. 12B fruit (peach) boxes or flats; and the size of wrapped nectarines packed in rows in No. 12B fruit (peach) boxes shall be indicated in accordance with the number of nectarines in each container, such as ''80 count,'' ''88 count,'' etc.

(ii) The size of nectarines in molded forms (tray-packs) in experimental containers and in No. 22G standard lug boxes shall be indicated according to the number of such nectarines when packed in molded forms in the No. 22D standard lug box or the No. 32 standard box in accordance with the requirements of standard pack, such as ''80 size,'' ''88 size,'' etc., along with count requirements in paragraph (a)(4)(i) of this section.

* * * * *

(iv) * * *

TABLE 1—WEIGHT-COUNT STANDARDS FOR ALL VARIETIES OF NECTARINES PACKED IN LOOSE-FILLED OR TIGHT-FILLED CONTAINERS

Column A—Tray pack size designation	Column B—Maximum number of nectarines in 16-pound sample applicable to varieties specified in paragraphs (a)(2)(ii), (a)(3)(ii), (a)(4)(ii), (a)(5)(ii), (a)(7)(ii), and (a)(8)(ii) of § 916.356
108	100
96	90
88	83
84	78
80	75
72	68
70	61
64	56
60	50
56	47
54	40
50	39
48	35
44	33
42	31
40	30
36	25
34	23
32	22

TABLE 1—WEIGHT-COUNT STANDARDS FOR ALL VARIETIES OF NECTARINES PACKED IN LOOSE-FILLED OR TIGHT-FILLED CONTAINERS—Continued

Column A—Tray pack size designation	Column B—Maximum number of nectarines in 16-pound sample applicable to varieties specified in paragraphs (a)(2)(ii), (a)(3)(ii), (a)(4)(ii), (a)(5)(ii), (a)(7)(ii), and (a)(8)(ii) of § 916.356
30	19

TABLE 2.—WEIGHT-COUNT STANDARDS FOR ALL VARIETIES OF NECTARINES PACKED IN LOOSE-FILLED OR TIGHT-FILLED CONTAINERS

Column A—Tray pack size designation	Column B—Maximum number of nectarines in 16-pound sample applicable to varieties specified in paragraphs (a)(6)(ii) and (a)(9)(ii) of § 916.356
108	92
96	87
88	78
84	75
80	67
72	61
70	56
64	51
60	46
56	43
54	39
50	37
48	33
44	30
42	28
40	26
36	25
34	23
32	22
30	19

* * * * *

(8) * * *

(i) The number of individual consumer packages, the net weight of each consumer package, and the minimum size description of the contents, using the terms ''Minimum size 60 and larger,'' or ''Minimum size 70 and larger,'' etc., as applicable.

* * * * *

(d) During the period April 1 through October 31, 1999, each container or package when packed with nectarines meeting the ''CA Utility'' quality requirements, shall bear the words ''CA Utility,'' along with all other required container markings, in letters at least ⅜ inch in height on the visible display panel. Consumer bags or packages must also be clearly marked on the consumer bags or packages as ''CA Utility,'' along with other required markings, in letters at least ⅜ inch in height.

* * * * *

3. Section 916.356 is amended by:

a. Revising the introductory text of paragraph (a)(1);

b. Removing Table 1;

c. Revising Table 1 to Paragraph (a)(1)(iv); and

d. Revising the introductory text of paragraphs (a)(4) and (a)(6) to read as follows:

§ 916.356 California nectarine grade and size regulation.

(a) * * *

(1) Any lot or package or container of any variety of nectarines unless such nectarines meet the requirements of U.S. No. 1 grade: *Provided,* That nectarines 2 inches in diameter or smaller, shall not have fairly light-colored, fairly smooth scars which exceed an aggregate area of a circle ⅜ inch in diameter, and nectarines larger than 2 inches in diameter shall not have fairly light-colored, fairly smooth scars which exceed an aggregate area of a circle ½ inch in diameter: *Provided further,* That an additional tolerance of 25 percent shall be permitted for fruit that is not well formed but not badly misshapen: *Provided further,* That all varieties of nectarines which fail to meet the U.S. No. 1 grade only on account of lack of blush or red color due to varietal characteristics shall be considered as meeting the requirements of this subpart: *Provided further,* That during the period April 1 through October 31, 1999, any handler may handle nectarines if such nectarines meet ''CA Utility'' quality requirements. The term ''CA Utility'' means that not more than 40 percent of the nectarines in any container meet or exceed the requirements of the U.S. No. 1 grade, except that when more than 30 percent of the nectarines in any container meet or exceed the requirements of U.S. No. 1 grade, the additional 10 percent shall have non-scoreable blemishes as determined when applying the U.S. Standards for Grades of Nectarines; and that such nectarines are mature and are:

* * * * *

TABLE 1 TO PARAGRAPH (a)(1)(iv)

Column A variety	Column B maturity guide
Alshir Red	J
Apache	G
April Glo	H
Arm King	B
August Glo	L
August Lion	J
August Red	J
Aurelio Grand	F
Autumn Delight	L
Autumn Grand	L
Big Jim	J
Bob Grand	L
Diamond Jewel	L
Diamond Ray	L
Earliglo	I
Early Diamond	J
Early May	F
Early May Grand	H
Early Red Jim	J
Early Sungrand	H
Fairlane	L
Fantasia	J
Firebrite	H
Flamekist	L
Flaming Red	K
Flavor Grand	G
Flavortop	J
Flavortop I	K
Grand Diamond	L
Independence	H
July Red	L
June Brite	I
Juneglo	H
Kay Diamond	L
King Jim	L
Kism Grand	J
Late Le Grand	L
Late Red Jim	J
Maybelle	F
May Diamond	I
May Fire	H
Mayglo	H
May Grand	H
May Jim	I
May Kist	H
May Lion	J
Mid Glo	L
Mike Grand	H
Moon Grand	L
Niagara Grand	H
Pacific Star	G
P-R Red	L
Red Diamond	L
Red Delight	I
Red Fred	J
Red Free	L
Red Glen	J
Red Glo	I
Red Grand	H
Red Jim	L
Red May	J
Rio Red	L
Rose Diamond	J
Royal Delight	F
Royal Giant	I
Royal Glo	I
Ruby Diamond	L
Ruby Grand	J
Ruby Sun	J
Scarlet Red	K
September Grand	L

TABLE 1 TO PARAGRAPH (a)(1)(iv)—Continued

Column A variety	Column B maturity guide
September Red	L
Sheri Red	J
Son Red	L
Sparkling June	L
Sparkling May	J
Sparkling Red	L
Spring Bright	L
Spring Diamond	L
Spring Red	H
Star Brite	J
Summer Beaut	H
Summer Blush	J
Summer Bright	J
Summer Diamond	L
Summer Fire	L
Summer Grand	L
Summer Lion	L
Summer Red	L
Summer Star	G
Sunburst	J
Sun Diamond	I
Sunfre	F
Sun Grand	G
Super Star	G
Tasty Gold	H
Tom Grand	L
Zee Glo	J
Zee Grand	I

Note: Consult with the Federal or Federal-State Inspection Service Supervisor for the maturity guides applicable to the varieties not listed above.

* * * * *

(4) Any package or container of Arctic Glo, Arctic Rose, Arctic Star, Diamond Bright, Early May, Juneglo, June Pearl, Kay Glo, May Diamond, May Grand, May Lion, Prima Diamond IV, Prima Diamond VI, Prima Diamond 13, Prince Jim, Red Delight, Red Glo, Rose Diamond, Royal Glo, Sparkling May, Star Brite, or Zee Grand variety nectarines unless:

* * * * *

(6) Any package or container of Alshir Red, Alta Red, Arctic Pride, Arctic Queen, Arctic Snow (White Jewel), Arctic Sweet, August Glo, August Lion, August Red, August Snow, Autumn Delight, Big Jim, Brite Pearl, Crystal Rose, Diamond Ray, Early Red Jim, Fairlane, Fantasia, Firebrite, Fire Pearl, Flame Glo, Flaming Red, Flavortop, Flavortop I, Grand Diamond, Grand Pearl, Honey Kist, How Red, July Red, Kay Diamond, King Jim, Late Red Jim, Mid Glo, Niagara Grand, P-R Red, Prima Diamond IX, Prima Diamond XVI, Prima Diamond XIX, Prima Diamond XXIV, Red Diamond, Red Glen, Red Jim, Rio Red, Royal Giant, Ruby Diamond, Ruby Pearl, Scarlet Red, September Red, Sparkling June, Sparkling Red, Spring Bright, Spring Diamond, Spring Red, Summer Beaut, Summer Blush, Summer Bright, Summer Diamond, Summer Fire, Summer Grand, Summer Lion, Summer Red, Sunburst, Sun Diamond, Sunny Red, Super Star, Terra White, Zee Glo, or 491–48 variety nectarines unless:

* * * * *

PART 917—FRESH PEARS AND PEACHES GROWN IN CALIFORNIA

4. Section 917.442 is amended by:

a. Revising paragraph (a)(3);

b. Revising paragraph (a)(4)(ii);

c. Revising Tables 1 and 2 in paragraph (a)(4)(iv);

d. Revising paragraph (a)(9)(i); and

e. Revising paragraph (d) to read as follows:

§ 917.442 California peach container and pack regulation.

(a) * * *

(3) Each package or container of peaches, except for consumer packages in master containers and consumer packages mailed directly to consumers, shall bear on one outside end in plain sight and in plain letters at least ⅜ inch in height the words ''U.S. Mature'' or ''US MAT'' if such peaches are mature as defined in the United States Standards for Grades of Peaches (7 CFR 51.1210 through 51.1223); or may instead bear on one outside end in plain sight and in plain letters at least ⅜ inch in height the words ''California Well Matured'' or ''CA WELL MAT'' if such peaches are well matured as defined in § 917.459 of this part.

(4) * * *

(ii) The size of peaches in molded forms in experimental containers and in the No. 22G standard lug box shall be indicated according to the number of such peaches when packed in molded forms in the No. 22D standard lug box or the No. 32 standard box in accordance with the requirements of standard pack, such as ''80 size,'' ''88 size,'' etc., along with the count requirements in paragraph (a)(4)(i) of this section.

* * * * *

(iv) * * *

TABLE 1—WEIGHT-COUNT STANDARDS FOR ALL VARIETIES OF PEACHES PACKED IN LOOSE-FILLED OR TIGHT-FILLED CONTAINERS

Column A—Tray pack size designation	Column B—Maximum number of peaches in 16-pound sample applicable to varieties specified in paragraphs (a)(2)(ii), (a)(3)(ii), (a)(4)(ii), (a)(5)(ii), and (b)(3) of § 917.459
96	96
88	92
84	83
80	76
72	69
70	65
64	57
60	51
56	47
54	44
50	39
48	35
44	33
42	31
40	30
36	27
34	25
32	23
30	21

TABLE 2.—WEIGHT-COUNT STANDARDS FOR ALL VARIETIES OF PEACHES PACKED IN LOOSE-FILLED OR TIGHT-FILLED CONTAINERS

Column A—Tray pack size designation	Column B—Maximum number of peaches in 16-pound sample applicable to varieties specified in paragraphs (a)(6)(ii) and (c)(3) of § 917.459
96	96
88	83
84	79
80	73
72	64
70	59
64	53
60	46
56	45
54	43
50	39
48	35
44	33
42	31
40	30
36	27
34	25
32	23
30	21

* * * * *

(9) * * *

(i) The number of individual consumer packages, the net weight of each consumer package, and the minimum size description of the contents using the terms ''Minimum size 60 and larger,'' or ''Minimum size 70 and larger,'' etc., as applicable.

* * * * *

(d) During the period April 1 through November 23, 1999, each container or package when packed with peaches meeting ''CA Utility'' quality requirements, shall bear the words ''CA Utility,'' along with all other required container markings, in letters at least ⅜ inch in height on the visible display panel. Consumer bags or packages must also be clearly marked on the consumer bags or packages as ''CA Utility,'' along with other required markings, in letters at least ⅜ inch in height.

5. Section 917.459 is amended by:

a. Revising the introductory text of paragraph (a)(1);

b. Removing Table 1;

c. Revising Table 1 to Paragraph (a)(1)(iv); and

d. Revising the introductory text of paragraphs (a)(3), (a)(4), (a)(5), and (a)(6) to read as follows:

§ 917.459 California peach grade and size regulation.

(a) * * *

(1) Any lot or package or container of any variety of peaches unless such peaches meet the requirements of U.S. No. 1 grade: *Provided*, That an additional 25 percent tolerance shall be permitted for fruit with open sutures which are damaged, but not seriously damaged: *Provided further*, That during the period April 1 through November 23, 1999, any handler may handle peaches if such peaches meet ''CA Utility'' quality requirements. The term ''CA Utility'' means that not more than 40 percent of the peaches in any container meet or exceed the requirements of the U.S. No. 1 grade, except that when more than 30 percent of the peaches in any container meet or exceed the requirements of U.S. No. 1 grade, the additional 10 percent shall have non-scoreable blemishes as determined when applying the U.S. Standards for Grades of Peaches; and that such peaches are mature and are:

* * * * *

(iv) * * *

TABLE 1 TO PARAGRAPH (A)(1)(IV)

Column A—variety	Column B—Maturity guide
Ambercrest	G
Angelus	I
August Lady	L
August Sun	I
Autumn Crest	I
Autumn Gem	I
Autumn Lady	H
Autumn Rose	I
Belmont (Fairmont)	I
Berenda Sun	I
Blum's Beauty	G
Cal Red	I
Carnival	I
Cassie	H
Coronet	E
Crimson Lady	J
Crown Princess	J
David Sun	I
Diamond Princess	J
Early Delight	H
Early Elegant Lady	L
Early May Crest	H
Early O'Henry	I
Early Top	G
Elberta	B
Elegant Lady	L
Fairtime	G
Fancy Lady	J
Fay Elberta	C
Fayette	I
Fire Red	I
First Lady	D
Flamecrest	I
Flavorcrest	G
Flavor Queen	H
Flavor Red	G
Franciscan	G
Goldcrest	H
Golden Crest	H
Golden Lady	F
Honey Red	G
John Henry	J
July Elberta	C
June Lady	G
June Pride	J
June Sun	H
Kern Sun	H
Kingscrest	H
Kings Lady	I
Kings Red	I
Lacey	I
Lady Sue	L
Mary Anne	G
May Crest	G
May Sun	I
Merrill Gem	G
Merrill Gemfree	G
O'Henry	I
Pacifica	G
Parade	I
Pat's Pride	D
Prima Gattie 8	L
Prima Lady	J
Queencrest	G
Ray Crest	G
Red Cal	I
Red Dancer (Red Boy)	I
Redhaven	G
Red Lady	G
Redtop	G
Regina	G

TABLE 1 TO PARAGRAPH (A)(1)(IV)—Continued

Column A—variety	Column B—Maturity guide
Rich Lady	J
Rich May	H
Rich Mike	H
Rio Oso Gem	I
Royal Lady	J
Royal May	G
Ruby May	H
Ryan Sun	I
Scarlet Lady	F
September Sun	I
Sierra Crest	H
Sierra Lady	I
Sparkle	I
Springcrest	G
Spring Lady	H
Springold	D
Sugar Lady	J
Summer Lady	L
Summerset	I
Suncrest	G
Sweet Scarlet	J
Topcrest	H
Tra Zee	J
Willie Red	G
Zee Lady	L

Note: Consult with the Federal or Federal-State Inspection Service Supervisor for the maturity guides applicable to the varieties not listed above.

* * * * *

(3) Any package or container of Goldcrest, Super Rich, or Topcrest variety peaches unless:

* * * * *

(4) Any package or container of Snow Dance variety peaches unless:

* * * * *

(5) Any package or container of Babcock, Crimson Lady, Crown Princess, David Sun, Early May Crest, Flavorcrest, Golden Crest, June Lady, Kern Sun, May Crest, May Sun, Merrill Gemfree, Pink Rose, Prima Peach IV, Queencrest, Ray Crest, Redtop, Rich May, Rich Mike, Snow Brite, Springcrest, Spring Lady, Spring Snow, Sugar May, Sweet Scarlet, or White Dream variety of peaches unless:

* * * * *

(6) Any package or container of Amber Crest, August Lady, Autumn Flame, Autumn Lady, Autumn Rose, Cal Red, Carnival, Cassie, Champagne, Diamond Princess, Early Elegant Lady, Early O'Henry, Elegant Lady, Fairtime, Fancy Lady, Fay Elberta, Flamecrest, John Henry, June Pride, Kaweah, Kings Lady, Lacey, Late Ito Red, Madonna Sun, Morning Lord, O'Henry, Prima Gattie, Prima Peach VIII, Prima Peach 20, Prima Peach 23, Red Dancer, Rich Lady, Royal Lady, Ryan Sun, Saturn (Donut), Scarlet Snow, September Snow, September Sun, Sierra Lady, Snow Diamond, Snow Giant, Snow King, Sparkle, Sprague Last Chance, Sugar Giant, Sugar Lady, Summer Lady, Summer Sweet, Summer Zee, Suncrest, Tra Zee, Vista, White Lady, Yukon King, Zee Lady, or 1–01–505 variety of peaches unless:

* * * * *

Dated: March 2, 1999.

Robert C. Keeney,

Deputy Administrator, Fruit and Vegetable Programs.

[FR Doc. 99–5552 Filed 3–5–99; 8:45 am]

BILLING CODE 3410–02–P

federal register

Monday
March 8, 1999

Part XV

Department of Justice

Office of Juvenile Justice and Delinquency Prevention

Evaluation of Parents Anonymous℠; Notice

DEPARTMENT OF JUSTICE

Office of Juvenile Justice and Delinquency Prevention

[OJP (OJJDP)–1211]

RIN 1121–ZB45

Evaluation of Parents Anonymous℠

AGENCY: Office of Justice Programs, Office of Juvenile Justice and Delinquency Prevention, Justice.

ACTION: Notice of funding availability program announcement.

SUMMARY: The Office of Juvenile Justice and Delinquency Prevention (OJJDP) is requesting applications for the evaluation of the Parents Anonymous℠ program. The purpose of the evaluation is to assess the implementation and effectiveness of the Parents Anonymous℠ program in diminishing the impact of risk factors, increasing the resiliency of parents and children, preventing and treating child abuse and neglect, and preventing juvenile delinquency.

DATES: Applications must be submitted by May 7, 1999.

ADDRESSES: The application kit is available from the Juvenile Justice Clearinghouse at 800–638–8736. The application kit can also be obtained online at OJJDP's Web site at http://www.ojjdp.ncjrs.org.

FOR FURTHER INFORMATION CONTACT: Dean Hoffman, Program Manager, Research and Program Development Division, Office of Juvenile Justice and Delinquency Prevention, 800 K Street, NW., 3d Floor, Washington, D.C. 20531; 202–353–9256. [This is not a toll-free number.]

SUPPLEMENTARY INFORMATION:

Background

Parents Anonymous℠ is the oldest and largest national child abuse prevention program in America dedicated to family strengthening in partnership with local communities. From a single group in 1970, Parents Anonymous℠ has grown into more than 2,300 weekly mutual support groups for parents and complementary children's programs. In communities throughout the country, a strong partnership exists between local communities, affiliate organizations, and Parents Anonymous℠, Inc., the national accrediting entity. With a 28-year history and more than 30,000 local volunteers, Parents Anonymous℠ worked with 100,000 parents and their children in 1997 to help prevent child abuse and neglect.

The Parents Anonymous ℠ national network consists of 50 State and local affiliate organizations, which oversee weekly Parents Anonymous ℠ groups and children's programs. Parents Anonymous ℠, Inc., provides training and technical assistance to affiliates, community-based organizations that are prospective affiliates, and State and local government agencies to foster the development and maintenance of Parents Anonymous ℠ groups. Program materials, technical assistance services, and regional and national trainings are designed and conducted by Parents Anonymous ℠, Inc.

Mutual support and shared leadership are the cornerstones of the Parents Anonymous ℠ program. Parents Anonymous ℠ organizations partner in local communities with volunteers, agencies, and parents to establish groups to strengthen families. The program is both a community development model and a prevention and treatment model. Parent leaders have meaningful and identifiable roles at both the group and organizational levels to ensure shared leadership and the development of more responsive programs to meet the needs identified by families. This unique model actualizes the principles of mutual support and shared leadership not just in the program model but at the organizational level through the leadership roles of parents in effective outreach to other parents, program planning and implementation, strategic planning, fundraising, policy decisions, organizational governance, and evaluation activities. Parents Anonymous ℠, Inc., has set the stage for expanding parent leader roles throughout its organizational functions by creating the National Parent Leadership Team. This team co-trains, provides technical assistance, and develops program materials. Parents Anonymous ℠ partners with parent leaders of diverse ethnic, geographic, gender, and cultural backgrounds at all levels of the national organization.

Goals

Phase I

- Determine the theoretical premises and principles that constitute the Parents Anonymous ℠ program model, assess how this model is being operationalized nationally, and identify the roles of parent participants, group facilitators, and program coordinators.
- Identify strategies, methods, and functions of parent leaders at the group, local, State, and national organizational levels of Parents Anonymous ℠.
- Identify the factors that motivate parents to seek help and stay in the Parents Anonymous ℠ group and that help parents change. Parents Anonymous ℠ staff members and participants and the Project Advisory Board (described below) will help identify other important factors to study.

Phase II

- Assess the effectiveness of the Parents Anonymous ℠ program in diminishing the impact of risk factors, increasing the resiliency of parents and children, preventing and treating child abuse and neglect, and preventing juvenile delinquency.

Objectives

Phase I

- Conduct a process evaluation to accomplish the above goals using appropriate qualitative and quantitative methods.
- Design an outcome evaluation to assess the effectiveness of the Parents Anonymous ℠ program in diminishing the impact of risk factors, increasing the resiliency of parents and children, preventing and treating child abuse and neglect, and preventing juvenile delinquency. The design must meet scientifically rigorous standards for evaluation and be able to be accomplished in Phase II. The evaluator must design and pilot test the instruments to be used.
- Produce an interim report describing the results of the process evaluation of the development and maintenance of groups and the implementation of the theoretical premises, principles, and model of Parents Anonymous ℠ 30 days prior to the end of Phase I. In addition, a summary version of this report suitable for publication as an Office of Juvenile Justice and Delinquency Prevention (OJJDP) Bulletin must be prepared.

Phase II

- Continue the process evaluation.
- Conduct the outcome evaluation.
- Produce a report describing the findings of the process and outcome evaluations. In addition, a summary version of this report suitable for publication as an OJJDP Bulletin must be prepared.

Program Strategy

This theory-driven evaluation will be conducted in two phases, each lasting 18 months. During Phase I, the process evaluation will measure the operationalization of the theoretical premises, principles, best practices, and model of the Parents Anonymous ℠

program. Phase II of the study will explore the various factors that contribute to the program's effectiveness and develop survey instruments to measure outcomes related to both parents and their children. During Phase II, program outcomes and impacts will be measured using the design and data collection instruments developed during Phase I.

Phase I should result in an indepth understanding of why parents seek help, what helps them stay in Parents Anonymous SM, how the program helps them change, what constitutes the key elements of a Parents Anonymous SM group, and other relevant issues. Parents Anonymous SM staff members and participants will be consulted regarding these other issues. The applicant must address cultural diversity issues in the design and implementation of both the process and outcome evaluation. The key concepts of mutual support and shared leadership and the premises of the Parents Anonymous SM model should be explored with a cross section of group participants, parent leaders, group facilitators, and program coordinators of Parents Anonymous SM organizations. The study will also explore the processes and strategies of parent leadership development at the group and organizational levels of Parents Anonymous SM. Furthermore, it is expected that a logic model will be developed to clarify the implementation of the theoretical bases of the Parents Anonymous SM program. Phase I should result in a survey of the number of families served, family composition, race and ages of children, and other descriptive information. Phase I also should document how families are referred to the program.

In preparation for Phase II, a major product of Phase I will be the design of the outcome study and survey instruments to evaluate the effectiveness of Parents Anonymous SM groups and parent leadership roles and functions in preventing and treating child abuse and neglect.

Applicants should become familiar with the theoretical framework that comprises the Parents Anonymous SM philosophy, principles, best practices, and program model. A Parents Anonymous SM program package can be obtained through the Juvenile Justice Clearinghouse by calling 800–638–8736. In addition, the applicant should demonstrate an understanding of the causes of child maltreatment, state-of-the-art community-based prevention programs, research on the effectiveness of family strengthening programs, and mutual support and self-help literature. The applicant's strategies for conducting the process and outcome evaluation should reflect an understanding of the collaboration between Parents Anonymous SM, Inc., and its regional and local organizations, shared leadership with program participants, and methodological issues related to evaluating mutual support programs and community-based prevention programming. Applicants must identify other theory-driven, multisite evaluations they have conducted and demonstrate their knowledge and skills in conducting them. Applicants should propose both qualitative and quantitative methods to achieve the goals set forth in this solicitation.

Applicants must demonstrate cultural sensitivity for parent participants and assure the confidentiality of information obtained from them.

This evaluation is to be, in part, a test of the theoretical premises, principles, and model of the Parents Anonymous SM program. To facilitate this theory-driven evaluation, the evaluator should develop a logic model to assess program goals, implementation and maintenance strategies, essential elements of the theory-driven model, and measurable outcome objectives.

Once the award is made, Parents Anonymous SM, Inc., will introduce the evaluator and the evaluation to the Parents Anonymous SM national network, emphasize the usefulness of the evaluation, and encourage openness in sharing information, opinions, and ideas.

The grantee will work with staff of Parents Anonymous SM, Inc., to determine the scope and nature of Parents Anonymous SM organizations and types of groups; to promote the usefulness of the evaluation to Parents Anonymous SM organizations, parents, and volunteers in order to assure their continued cooperation; to engage parent leaders, volunteers, and Parents Anonymous SM program staff in helping identify relevant program issues; and to establish an overall collaborative relationship that will help ensure cooperation between the Parents Anonymous SM national network and the evaluator without affecting the integrity of the evaluation. It should be noted that a national database is currently under development. (The universe of Parents Anonymous SM programs will be represented, but specifics about the programs may not be.)

Project Advisory Board

A Project Advisory Board (PAB) will advise the evaluator regarding implementation issues, methodologies, feedback, instrumentation, and ways to ensure cooperation and collaboration of Parents Anonymous SM groups based on the principle of shared leadership. The PAB will consist of five members. The evaluation grantee will be responsible for recommending four of the PAB members to OJJDP. The fifth member will be selected by OJJDP in consultation with Parents Anonymous SM, Inc.

The applicant should recommend members who are evaluators with demonstrated expertise in the evaluation of multisite mutual support and self-help groups and child maltreatment programs and should also include two members from among parents, staff, and volunteers involved in the Parents Anonymous SM program. The applicant must include names of prospective members with evaluation experience with signed letters indicating their willingness to serve. (Parent, staff, and volunteer members will be identified after the award is made). Upon award, and with approval of OJJDP, members of the PAB will be appointed by the evaluator.

The PAB will be convened twice during Phase I. The first meeting will be held soon after the evaluator submits the final evaluation design. The PAB will be charged with reviewing the design and suggesting modifications. The second meeting will be held at the end of Phase I. At this meeting, the PAB will be charged with reviewing the process evaluation findings to that point, reviewing the impact evaluation design, and informing evaluation activities for the remainder of the project.

The applicant must propose a plan for coordinating both PAB meetings, one to be held in Washington, DC, and one in Claremont, CA. Also, the evaluator must include in its budget expenses for the meeting location, materials, travel and related expenses, and preparation day(s) for the PAB members.

Finally, the applicant must describe a plan for disseminating results in a user-friendly manner throughout both phases of the study.

Products

The following products will be delivered during Phase I:

1. Within 3 months of the grant award, the grantee will submit a final process evaluation design including data collection instruments.

2. Within 9 months of the grant award, the grantee will submit a draft outcome evaluation design including data collection instruments to be pilot tested. By the end of Phase I, the data collection instruments to be used in the outcome evaluation must have been

pilot tested and approved by the Office of Management and Budget under Paperwork Reduction Act regulations.

3. The grantee will provide an interim report describing the results of the process evaluation. This report should include descriptions of the implementation of the theoretical premises, principles, and model of Parents Anonymous℠ and the development and maintenance of groups. This report will be submitted 30 days prior to the end of Phase I. In addition, a summary version of this report suitable for publication as an OJJDP Bulletin must be prepared.

During Phase II, the following products will be delivered:

1. The grantee will provide a draft final report incorporating the results of both the process and outcome evaluations. This report will be submitted at least 60 days prior to the end of the 3-year grant period to allow for review and comment by OJJDP.

2. The grantee will provide a final report, including an executive summary that can be published as a separate document. This document will be submitted 30 days prior to the end of the 3-year grant period. In addition, a summary version of this report suitable for publication as an OJJDP Bulletin must be prepared.

Eligibility Requirements

OJJDP invites applications from public and private agencies, organizations, institutions, and individuals. Private, for-profit organizations must agree to waive any profit or fee. Joint applications from two or more eligible applicants are welcome; however, one applicant must be clearly indicated as the primary applicant (for correspondence, award, and management purposes) and the others indicated as coapplicants.

Selection Criteria

Applicants will be evaluated and rated by a peer review panel according to the criteria outlined below.

Problem(s) To Be Addressed (15 points)

Applicants must include a clear and concise statement of their understanding of the nature and extent of child abuse and neglect and its prevention and treatment, mutual support programs, and Parents Anonymous℠. Applicants should also discuss methodological issues and problems associated with this type of evaluation and proposed solutions for these potential problems. A thorough understanding of theory-driven evaluation, community-based child abuse prevention programs, and multisite research of mutual support programs on a national level is vital.

Goals and Objectives (10 points)

Applicants must define specific and measurable goals and objectives for coordinating, managing, and producing the products of this process and impact evaluation.

Project Design (35 points)

The applicant must present a clear project design that delineates activities necessary to the accomplishment of the goals of this announcement along with a timetable for their accomplishment and for delivery of the required products. The applicant should demonstrate the ability to conduct the evaluation in a manner compatible with the shared leadership model and principles of mutual support that are the essence of Parents Anonymous℠. The applicant should also demonstrate that implementation of the design will not adversely affect the effective functioning of the parent groups or overburden the resources of the Parents Anonymous℠ organizations, but will instead represent a true collaborative process with Parents Anonymous℠. The applicant must describe how cultural diversity will be addressed in the research strategy.

Management and Organizational Capability (30 points)

The application should include a discussion of how the grantee will coordinate and manage this evaluation to achieve the evaluation objectives. The applicant's management structure and staffing must be adequate and appropriate for the successful implementation of the project. The applicant must identify responsible individuals, their time commitment, and major tasks. Key staff should have significant experience with multisite evaluation research. They must demonstrate the ability to work effectively with parent leaders and program coordinators in data collection and analysis issues and other requirements of the project, and they must provide a role for Parents Anonymous℠ groups in the evaluation. Staff résumés should be attached as part of the appendixes. Research expertise and organizational experience with evaluation of mutual support programs and/or community-based child abuse and neglect prevention programs are important. There should be a demonstration of how cultural diversity issues have been addressed in research previously conducted by the applicant. The applicant organization should demonstrate expertise in theory-driven and collaborative evaluations.

Budget (10 points)

The applicant must provide a proposed budget that is complete, detailed, reasonable, allowable, and cost effective in relation to the activities to be undertaken.

Format

The narrative portion of this application must not exceed 40 pages in length (excluding forms, assurances, and appendixes) and must be submitted on 8½ by 11-inch paper, double spaced on one side of the paper in a standard 12-point font. This is necessary to maintain fair and uniform standards among all applicants. If the narrative does not conform to these standards, OJJDP will deem the application ineligible for consideration.

Award Period

The project period will be 3 years, funded in two 18-month budget periods. Funding after the first budget period depends on grantee performance, availability of funds, and other criteria established at the time of award.

Award Amount

Up to $300,000 is available for the initial 18-month budget period. The amount of continuation funding is expected to be at a comparable level for Phase II; however, it may be at a higher level, contingent upon the design and scope of the evaluation.

Catalog of Federal Domestic Assistance (CFDA) Number

For this program, the CFDA number, which is required on Standard Form 424, Application for Federal Assistance, is 16.542. This form is included in OJJDP's Application Kit, which can be obtained by calling the Juvenile Justice Clearinghouse at 800–638–8736 or sending an e-mail request to puborder@ncjrs.org. The kit is also available online at http://www.ojjdp.ncjrs.org.

Coordination of Federal Efforts

To encourage better coordination among Federal agencies in addressing State and local needs, the U.S. Department of Justice (DOJ) is requesting applicants to provide information on the following: (1) active Federal grant award(s) supporting this or related efforts, including awards from DOJ; (2) any pending application(s) for Federal funds for this or related efforts; and (3) plans for coordinating any funds described in item (1) or (2) with the funding sought by this application. For each Federal award, applicants must include the program or project title, the Federal grantor agency, the amount of

the award, and a brief description of its purpose.

''Related efforts'' is defined for these purposes as one of the following:

1. Efforts for the same purpose (i.e., the proposed award would supplement, expand, complement, or continue activities funded with other Federal grants).

2. Another phase or component of the same program or project (e.g., to implement a planning effort funded by other Federal funds or to provide a substance abuse treatment or education component within a criminal justice project).

3. Services of some kind (e.g., technical assistance, research, or evaluation) to the program or project described in the application.

Delivery Instructions

All application packages should be mailed or delivered to the Office of Juvenile Justice and Delinquency Prevention, c/o Juvenile Justice Resource Center, 2277 Research Boulevard, Mail Stop 2K, Rockville, MD 20850; 301–519–5535. Note: In the lower left-hand corner of the envelope, you must clearly write ''Evaluation of Parents Anonymous℠.''

Due Date

Applicants are responsible for ensuring that the original and five copies of the application package are received by 5 p.m. EST on May 7, 1999.

Contact

For further information call Dean Hoffman, Program Manager, Research and Program Development Division, 202–353–9256, or send an e-mail inquiry to hoffmand@ojp.usdoj.gov. Potential applicants should not directly contact Parents Anonymous℠, Inc., or any organizations in the Parents Anonymous℠ national network.

Suggested References

Belsky, J. 1993. Etiology of child maltreatment: A developmental-ecological analysis. *Psychological Bulletin* 114(3):413–434.

Cohn, A.H. 1979. Essential elements of successful child abuse and neglect treatment. *Child Abuse and Neglect* 3:491–496.

Cohn, A.H., and Daro, D. 1987. Is treatment too late: What ten years of evaluative research tells us. *Child Abuse and Neglect* 11:433–442.

Gray, E. 1986. *Child Abuse: Prelude to Delinquency*. Washington, DC: U.S. Department of Justice, Office of Justice Programs, Office of Juvenile Justice and Delinquency Prevention.

Hawkins, J., VonCleve, E., and Catalano, R. 1991. Reducing early childhood aggression: Results of a primary prevention program. *Journal of the American Academy of Child and Adolescent Psychiatry* 30:208–217.

Humphreys, K., and Rappaport, J. 1994. Researching self-help/mutual aid groups and organizations: Many roads, one journey. *Applied & Preventive Psychology* 3:217–231.

Levine, M. 1988. An analysis of mutual assistance. *American Journal of Community Psychology* 19:167–187.

Riessman, F., and Carroll, D. 1995. *Redefining Self-Help: Policy and Practice*. San Francisco: Jossey-Bass Publishers.

Widom, C. 1991. Childhood victimization: Risk factor for delinquency. In *Adolescent Stress: Causes and Consequences*, edited by M. Colton and S. Gore. New York: Aldine de Gruyer.

Dated: March 2, 1999.

Shay Bilchik,

Administrator, Office of Juvenile Justice and Delinquency Prevention.

[FR Doc. 99–5670 Filed 3–5–99; 8:45 am]

BILLING CODE 4410–18–P

federal register

Monday
March 8, 1999

Part XVI

Department of Justice

Office of Juvenile Justice and Delinquency Prevention

Notice of the Fiscal Year 1999 Missing and Exploited Children's Program Proposed Program Plan and Announcement of Discretionary Competitive Assistance Grant; Notice

DEPARTMENT OF JUSTICE

Office of Juvenile Justice and Delinquency Prevention

[OJP (OJJDP)–1212]

RIN 1121–ZB46

Notice of the Fiscal Year 1999 Missing and Exploited Children's Program Proposed Program Plan and Announcement of Discretionary Competitive Assistance Grant

AGENCY: Office of Justice Programs, Office of Juvenile Justice and Delinquency Prevention, Justice.

ACTION: Proposed Program Plan for public comment.

SUMMARY: The Office of Juvenile Justice and Delinquency Prevention (OJJDP) is publishing its Missing and Exploited Children's Program Proposed Program Plan for Fiscal Year (FY) 1999 and soliciting public comment on the overall plan and priorities. After analyzing the public comments on this Proposed Program Plan, OJJDP will issue its final FY 1999 Missing and Exploited Children's Program Plan.

DATES: Comments must be submitted by May 7, 1999.

ADDRESSES: Public comments should be mailed to Shay Bilchik, Administrator, Office of Juvenile Justice and Delinquency Prevention, 800 K Street NW., 3rd Floor, Washington, D.C. 20531.

FOR FURTHER INFORMATION CONTACT: Ronald C. Laney, Director, Missing and Exploited Children's Program, 202–616–3637. [This is not a toll-free number.]

SUPPLEMENTARY INFORMATION: The Missing and Exploited Children's Program is administered by the Office of Juvenile Justice and Delinquency Prevention (OJJDP). Pursuant to the Juvenile Justice and Delinquency Prevention (JJDP) Act of 1974, as amended, Section 406 (a)(2), 42 U.S.C. 5776, the Administrator of OJJDP is publishing for public comment a Proposed Program Plan for activities authorized by Title IV of the JJDP Act, the Missing Children's Assistance Act, 42 U.S.C. 5771 *et seq.*, that OJJDP proposes to initiate or continue in FY 1999. Taking into consideration comments received on this Proposed Program Plan, the Administrator will develop and publish a Final Program Plan that describes the program activities OJJDP intends to fund during FY 1999 using Title IV funds.

Other than solicitations for programs specified by Congress, solicitations for competitive grant applications under the Final Program Plan will be published in the **Federal Register** at a later date. No proposals, concept papers, or other types of applications should be submitted at this time.

Background: The Nature of the Problem of Missing and Exploited Children

For the purposes of Title IV, the term ''missing children'' refers to children who have been abducted by either a family or nonfamily member and includes children who have been abducted within the United States and those who have been abducted from the United States to a foreign country. The term ''child exploitation'' refers to any criminal activity that focuses on children as sexual objects and includes sexual abuse, child pornography, and prostitution.

The issues involving missing and exploited children are complex and diverse. Since 1984, OJJDP has supported a variety of research projects designed to provide the knowledge needed to make informed policy decisions and meet the information needs of the field. These projects include the 1988 National Incidence Study of Missing, Abducted, Runaway, or Thrownaway Children (NISMART); Abduction Homicide Investigation Solvability Factors; Obstacles to the Recovery and Return of Parentally Abducted Children; and the Missing Children and Criminal Justice Response to Parental Abduction Cases. (Preliminary results from NISMART II are expected to be available in late 1999.) This research indicates that abduction and exploitation can have a devastating impact on children and families. Lessons learned from research also provide the basis for this proposed program plan.

Family Abduction

NISMART estimated that 354,100 family abductions occur each year. Almost half (46 percent) of these abductions involved concealment, interstate transportation, or evidence that the abductor intended to keep the child indefinitely or permanently alter custody. Of this more serious subcategory of family abductions, a little more than half were perpetrated by men who were noncustodial fathers and father figures. Most victims were between the ages of 2 and 11. Half of these abductions involved unauthorized takings, and half involved failure to return the child after an authorized visit or stay.

Fifteen percent of family abductions involved the use of force or violence, and between 75 and 85 percent involved interstate transportation of the child. About half of family abductions occurred before the parents' relationship ended. Half did not occur until 2 or more years after a divorce or separation, usually after parents developed new households, moved away, developed new relationships, or became disenchanted with the legal system. More than half occurred in the context of relationships with a history of domestic violence. An estimated 49 percent of abductors had criminal records, and a significant number had a history of violent behavior, substance abuse, or emotional disturbance. As NISMART found, it is not uncommon for child victims of family abduction to have their names and appearances altered; to experience medical or physical neglect, unstable schooling, or homelessness; or to endure frequent moves. These children are often told lies about the abduction and the left-behind parent, even that the left-behind parent is dead.

NISMART did not report on the number of children who are abducted within the United States and who are taken to or illegally retained in foreign countries. In 1998, the U.S. Department of State maintained a caseload of approximately 1,000 outgoing (from the United States to another country) international abduction cases. It is reasonable to project that these abductions will increase as the trend continues toward a global society characterized by relaxed restrictions on international travel and increasing numbers of cross-cultural marriages, separations, and divorces.

Nonfamily Abduction

NISMART estimated that 3,200 to 4,600 short-term nonfamily abductions are reported yearly to law enforcement. Of these abductions, approximately 200 to 300 were kidnapings in which the child was either murdered, gone overnight, transported a distance of 50 miles or more, or detained by a perpetrator who intended to keep the child permanently. Young teenagers and girls were the most common victims, and two-thirds of short-term abductions involved a sexual assault. A majority of the victims were abducted from the street, and most abductions (85 percent) involved the use of force.

Using data from household surveys, NISMART estimated that 114,600 nonfamily abductions were attempted in 1988, most involving strangers and usually involving an attempt to lure a child into a car. In a majority of these cases, the police were not contacted.

In 1993, OJJDP awarded a research grant to the Washington State Attorney General's Office to identify the

characteristics of successful child abduction homicide investigations. The study examined cases from urban, suburban, and rural areas and included both large and small law enforcement agencies. The study found that in more than half (53 percent) of the instances, the offender was known to the victim. Most victims were abducted within one-quarter mile of their last known location, while younger victims were usually abducted closer to their home. Victims were selected on the basis of opportunity in 57 percent of the offenses. Sex was the motivating factor behind the offenders behavior in most (70 percent) of the cases. More than two-thirds of the time, the initial call to law enforcement was to report a runaway or missing child. The research indicated that thorough, repetitive, organized neighborhood canvasses are critical to identifying the offender.

Child Exploitation

Children are also at risk of being victimized when they have run away, are expelled or ''thrownaway'' from home, or are otherwise lost or missing. NISMART estimated that each year 446,700 children run away from households and another 12,800 run from juvenile facilities. Of all runaways identified, 133,500 were without a secure and familiar place to stay during their episodes. More than a third ran away more than once during the year, and 10 percent traveled a distance of more than 100 miles. Of the runaways from juvenile facilities, almost one-half left the State. While most runaways were teenagers, almost 10 percent were 11 years old or younger.

NISMART also reported that approximately 127,100 children were either told directly to leave their households, not allowed to return, had caretakers who made no effort to recover them when they ran away, or had been abandoned or deserted. By comparison, for every thrownaway child, there were four runaway children. Most thrownaways were older teenagers.

Finally, NISMART estimated that 438,200 children are lost, injured, or otherwise missing each year. Of this total, 139,100 cases are serious enough for the police to be called. Almost half involve children under 4. Most of these episodes last less than a day. A fifth of the children experience physical harm. An estimated 14 percent of the children are abused or assaulted during the episodes.

The advent of the information age has exposed children to a new threat. Industry experts estimate that more than 10 million children currently go online and, by the year 2002, 45 million children will use cyberspace to talk with friends, explore the universe, or complete homework assignments. In cyberspace, children are a mouse click away from exploring museums, libraries, and universities. Unfortunately, they are also a mouse click away from sexual exploitation and victimization.

While providing almost limitless opportunities to learn, the Internet has also become the new schoolyard for predators seeking children to victimize. Cloaked in the anonymity of cyberspace, sex offenders can seek victims with little risk of detection. They no longer need to lurk in parks and malls. Instead, they can roam from chatroom to chatroom trolling for children susceptible to manipulation and victimization. Chatroom stalking circumvents conventional safeguards and provides preferential sex offenders virtually unlimited opportunity to have unsupervised contact with children, which has grave implications for parents, educators, and law enforcement.

Impact on Children and Families

The victimization of children can have devastating effects on the child and the family. There are clear linkages between early childhood victimization and later violent behavior, such as school violence, drug abuse, and adult criminality. According to a 1995 National Institute of Justice study, child maltreatment has been shown to be a significant predictor of adult arrests for alcohol and/or drug abuse. Children who have been abducted and returned to their families often live in fear of being reabducted. Often, when a child is returned to his or her family after an extended period of time, limited psychological support is provided to either the child or the family. Almost four-fifths of victims and families of missing children do not receive mental health or counseling services.

For families of missing and exploited children, the impact of these crimes can have equally devastating effects. Emotions range from fear and anger to a sense of helplessness. Parents are often on their own when searching for their children. Like the victims of abductions, many parents do not receive the necessary support or counseling services to help them cope with this personal tragedy. When a child returns, the process of reunification typically takes no more than 15 minutes with no psychological or social service support. In most cases, the only nonfamily person present is a police officer.

Introduction to the Fiscal Year 1999 Program Plan

In 1984, Congress enacted the Missing Children's Assistance Act, which established the Missing and Exploited Children Program (MECP) within OJJDP. Under the Act, MECP is responsible for coordinating Federal missing and exploited children activities, providing a national resource center and clearinghouse, and supporting research, training, technical assistance, and demonstration programs to enhance the overall response to missing children and their families.

In FY 1998, OJJDP's Missing and Exploited Children's Program made significant advances in the course of meeting its responsibilities to provide services to children, parents, educators, prosecutors, law enforcement, and other professionals and interested persons working on child safety issues. Some of the notable accomplishments are summarized below.

In May 1998, OJJDP released *When Your Child Is Missing: A Family Survival Guide.* Written by parents for parents, the *Guide* provides firsthand insights into what families should do and expect when their children are missing. The *Guide* has been distributed to every law enforcement agency and public library across the country and to nonprofit organizations, State missing children clearinghouses, and family support programs. Copies of the *Guide* are available through OJJDP's Juvenile Justice Clearinghouse (JJC) at 800–638–8736.

OJJDP brought its Missing and Exploited Children's Program Web site online in April 1998. The Web site (www.ncjrs.org/ojjdp/missing/index.html) features Tips for Kids that tell children where they should go if they are scared, lost, or need help. It also provides children with information to help them avoid cyber-exploitation. The site has pages devoted to children, parents, teachers, and law enforcement and hypertext links to other Web sites of the Department of Justice and to the National Center for Missing and Exploited Children (NCMEC).

In FY 1998, OJJDP created the Internet Crimes Against Children (ICAC) Program to respond to the emerging threat of sex offenders' using computer-facilitated online technology to sexually exploit children. The focus of this initiative is to develop training and technical assistance programs to assist State and local law enforcement agencies respond effectively to the threat and to stimulate creation of regional multidisciplinary task forces.

Ten jurisdictions received assistance awards to implement regional task forces to address and combat Internet crimes against children that include representatives from law enforcement, victim services, child protective service agencies, and other relevant government and nongovernment agencies. The 10 jurisdictions are Bedford County Sheriff's Office, Virginia; Broward County Sheriff's Office, Florida; Colorado Springs Police Department, Colorado; Dallas Police Department, Texas; Illinois State Police; New York State Division of Criminal Justice Services; Portsmouth Police Department, New Hampshire; Sacramento County Sheriff's Office, California; South Carolina Office of the Attorney General; and Wisconsin Department of Justice.

Under the ICAC Program, funds are being used to implement safety education and prevention programs for children, parents, and educators; develop response protocols that foster collaboration, information sharing, and service coordination; and acquire sophisticated training and cutting-edge equipment for investigators. Ideally, these task forces will become regional clusters of technical and investigative expertise and will become part of a national law enforcement network that will assist parents, educators, prosecutors, and other professionals working on child protection issues.

In addition to funding the 10 ICAC Task Force cooperative agreements, OJJDP'S MECP engaged in several other training and technical assistance activities to enhance ICAC prevention, intervention, and investigation efforts. In FY 1998, the National Center for Missing and Exploited Children received funding to establish a CyberTipline (http://www.cybertipline.com) to collect and forward to appropriate law enforcement agencies information from citizens regarding computer-facilitated sexual exploitation of children. Online since March 1998, the CyberTipline has already provided law enforcement with information that has resulted in arrests for child exploitation offenses and the safe return of children enticed from home by sex offenders.

OJJDP and NCMEC, in consultation with the Federal Bureau of Investigation (FBI), U.S. Customs Service (USCS), U.S. Postal Inspection Service (USPIS), and Child Exploitation and Obscenity Section (CEOS) of the Department of Justice, developed new law enforcement training programs and sponsored a national teleconference. The teleconference provided information regarding prevention, investigation, applicable Federal law, and available resources to more than 30,000 viewers in over 400 downlink sites. The new training courses, Protecting Children Online (PCO) and Protecting Children Online Unit Commander (UC), were developed for law enforcement managers and investigators. Offered regionally, PCO is a 4½ day introductory course that provides information about Internet investigative techniques, interviewing and interrogation practices, and sex offender behavioral characteristics and discusses current statutory law and case decisions pertaining to electronic communications. UC is a 2½ day seminar concentrating on the broader policy and legal concerns and is designed to assist law enforcement executives develop and execute ICAC response plans for their agencies. The UC seminar is held on a monthly basis at NCMEC's Jimmy Ryce Law Enforcement Training Center in Arlington, Virginia. More than 400 law enforcement executives and investigators participated in these two courses in FY 1998.

Finally, OJJDP's MECP published *Forming a Multidisciplinary Team To Investigate Child Abuse*, the 12th title in OJJDP'S Portable Guides series, and prepared *Use of Computers in the Sexual Exploitation of Children*, the 13th title, which is forthcoming. Three additional guides are scheduled for publication in FY 1999: *Cultural Competence and Child Abuse Investigations; Risk Profiles for Abduction and Appropriate Interventions;* and *Uniform Child Custody and Jurisdiction and Enforcement Act (UCCJEA)*: *Implications for District Attorneys and Investigators.* OJJDP intends to continue the series to assist field professionals respond to child victimization issues.

In FY 1998, OJJDP's MECP received a National Performance Review Hammer award for program development in the area of international child abduction (ICA). Many factors can frustrate the return of children abducted to foreign countries. Communication problems, sovereignty issues, lack of legal infrastructure to enforce civil orders, and reluctance to return children for provincial or religious reasons are frequently encountered obstacles to recovering American children. These cases can also pose substantial legal, emotional, and financial challenges for the left-behind parent. Parents frequently take out second mortgages and exhaust their life savings on telephone calls, attorneys, and private investigators in the search for their children. Even if the children are located, the search and legal process is often so expensive that parents cannot afford the airfare to bring their children home. In response to this need, OJJDP, with the Office for Victims of Crime, developed the International Child Abduction Travel Reunification Program to assist impoverished parents recover their children by providing funds for international travel.

Under a grant administered by NCMEC, 21 children in countries ranging from Malta to the Dominican Republic have been reunited with their families in the United States. In one case, an American child was returned home after being abandoned in a Middle East refugee camp. In another recovery, a child missing for 3 years was located in the foster care system of an African nation.

As part of its coordination responsibilities, MECP chairs the Federal Agency Task Force on Missing and Exploited Children. In FY 1998, an ad hoc subcommittee was formed to discuss issues, concerns, practices, and the Federal response relating to international child abduction. The subcommittee is preparing a report for the Attorney General detailing the findings and will include recommendations to improve and enhance the Federal response to these cases. Scheduled for completion in early 1999, the report will also guide development of resource guides for law enforcement and left-behind parents.

In FY 1998, through a cooperative agreement with Fox Valley Technical College (FVTC), OJJDP provided training and technical assistance to more than 4,500 law enforcement, prosecutors, and health and family services professionals. This comprehensive training and technical assistance program integrates current research, state-of-the-art practice and knowledge, and new technologies into courses that are designed to increase skills and abilities, enhance service coordination and delivery, and improve the investigation and handling of missing and exploited children cases. Specialized technical assistance was provided to practitioners and State and local juvenile justice agencies relating to information sharing, response planning, child protection legislation, Internet crimes against children, and multidisciplinary team development.

In May 1998, the Attorney General participated in OJJDP's Missing Children's Day Ceremony to commemorate American's missing children and to recognize extraordinary efforts by law enforcement officers working to reunite children and their families. The Attorney General presented the NCMEC Law Enforcement

Officer of the Year Award for excellent work in recovering missing children to Inspector Jose Berrios and Agents Cesar Nieves and Ismael Cintron, all of Puerto Rico; Detective Jim Munsterman of San Diego; and Detectives Christina Metelski and Billy Soso of Phoenix.

Fiscal Year 1999 Programs

In FY 1999, OJJDP proposes, through MECP, to continue to concentrate on programs that are national in scope, promote awareness, and enhance the Nation's response to missing and exploited children and their families. Although funds for new programs in FY 1999 are limited, input from the field on program and service needs will assist OJJDP in planning both FY 1999 and future programming.

New Programs

OJJDP proposes to fund one new program in FY 1999. This proposed program is described below.

Internet Crimes Against Children Task Force Training and Technical Assistance Program

OJJDP proposes to issue a competitive solicitation to develop an ICAC Task Force training and technical assistance program. Activities under this program would include delivering advanced technical training related to computer-facilitated sexual exploitation offenses, convening ICAC town meetings, facilitating the ICAC Task Force Review Board, and assisting in task force development in other ways as determined by OJJDP.

Continuation Programs

The FY 1999 Title IV continuation programs are summarized below. Available funds, implementation sites, and other descriptive information are subject to change based on the plan review process, grantee performance, application quality, fund availability, and other factors. With the exception of the ICAC Regional Task Force Development Program, no additional applications will be solicited for these programs in FY 1999.

National Resource Center and Clearinghouse

Congress has provided $8,120,000 to continue and expand the programs, services, and activities of the National Center for Missing and Exploited Children, a national resource center and clearinghouse dedicated to missing and exploited children and their families. As provided in Title IV, the functions of the Center include the following:

- Provide a toll-free hotline where citizens can report investigative leads and parents and other interested individuals can receive information concerning missing children.
- Provide technical assistance to parents, law enforcement, and other agencies working on missing and exploited children issues.
- Promote information sharing and provide technical assistance by networking with regional nonprofit organizations, State missing children clearinghouses, and law enforcement agencies.
- Develop publications that contain practical, timely information.
- Provide information regarding programs offering free or low-cost transportation services that assist in reuniting children with their families.

In FY 1998, NCMEC's toll-free hotline received more than 132,000 calls ranging from citizens reporting information concerning missing children to parents and law enforcement requesting information and publications. NCMEC also assisted in the recovery of 6,930 children, disseminated millions of missing children photographs, distributed thousands of publications, and sponsored a national training workshop for State missing children clearinghouses and relevant nonprofit organizations. NCMEC also assists the State Department carry out its Hague Convention responsibilities by processing applications for children abducted to the United States (incoming cases).

In FY 1998, in addition to performing the national resource center and clearinghouses functions, NCMEC launched a Know the Rules safety education program. This program, targeting teenaged girls, was developed in response to research indicating that girls are at much greater risk of sexual exploitation than boys. NCMEC also published *Teen Safety on the Information Highway* to complement its CyberTipline and ICAC law enforcement training programs. This publication is designed to promote safe Internet practices for teenagers, the age group most at risk of sexual exploitation.

In FY 1999, NCMEC will continue to perform the national clearinghouse functions and will broaden the ICAC training program through development of 1-day awareness seminars for communities seeking to improve their response to these offenses. NCMEC will also sponsor research to determine the incidence of young people receiving sexual solicitations or who are exposed to pornography via the Internet and the context in which the exposure or solicitation occurred and to evaluate current knowledge of children and parents about how to respond to these episodes.

A 1-year cooperative agreement will be awarded to NCMEC in FY 1999 for the performance of the national resource center and clearinghouse functions. No additional applications will be solicited in FY 1999.

Internet Crimes Against Children Regional Task Force Development

A total of $5 million is available for this program in FY 1999. OJJDP will award funding to a minimum of eight additional jurisdictions to develop and support regional law enforcement task forces to address the problem of Internet crimes against children. A total of $2.6 million will be available for these new jurisdictions. Within 30 days of the date of this publication, OJJDP intends to issue a solicitation for assistance awards to States or local units of government, or combinations thereof, to assist communities in developing comprehensive multiagency responses that emphasize collaboration, information sharing, and victim assistance.

In addition to these new sites, additional funding will be awarded to the 10 jurisdictions that received initial grants in FY 1998. A total of $2.4 million will be available for this continuation funding.

Title IV Training and Technical Assistance Program

In FY 1998, Fox Valley Technical College (FVTC) was competitively awarded a 3-year cooperative agreement to provide training and technical assistance to law enforcement, prosecutors, and health and family services professionals. The purpose of this program is to ensure the provision of up-to-date, practical training and technical assistance for professionals working on missing and exploited children issues. Training modules focus on investigative techniques, interview strategies, comprehensive response planning, media relations, lead and case management, and other topics related to missing and exploited children cases.

Under the Title IV Training and Technical Assistance Program, FVTC currently offers five courses: Responding to Missing and Abducted Children, Child Sexual Exploitation Investigations, Child Abuse and Exploitation Investigative Techniques, Missing and Exploited Children, and Child Abuse and Exploitation Team Investigation Process. FVTC also provides technical assistance and support to the Federal Agency Task Force on Missing and Exploited

Children and its related subcommittees; writes numerous documents and publications relating to missing and exploited children; convenes special focus groups or meetings to facilitate communication and problem solving among youth service workers and professionals at the Federal, State, and local level; and performs special projects as directed by OJJDP such as designing protocols for handling and responding to cases involving missing and exploited children, establishing a response planning system, and conducting a case review of child protection legislation. No additional applications will be solicited in FY 1999.

To obtain additional information about specific training programs or copy of the FY 1999 training schedule, please call FVTC at 800–648–4966.

Alzheimer's Disease and Related Disorders Association's Safe Return Program

OJJDP is responsible for providing financial monitoring and oversight of this program, for which Congress has provided $900,000 in FY 1999. The program facilitates identification and safe return of memory-impaired persons who are at risk of wandering from their homes.

In FY 1998, the Safe Return Program increased its registration database to nearly 45,000 individuals and assisted in the return of 992 wanderers.

In FY 1999, the program will continue to expand the national registry of memory-impaired persons, maintain a toll-free telephone service, provide a Fax Alert System, conduct a ''train the trainers'' program for law enforcement and emergency personnel, disseminate informational and educational materials, and continue a national public awareness campaign.

National Crime Information Center

OJJDP proposes to continue to transfer funds to the Department of Justice's Justice Management Division, through a reimbursable agreement, to continue NCMEC's online access to the FBI's National Crime Information Center (NCIC) Wanted and Missing Persons files. The ability to verify NCIC entries, communicate with law enforcement through the Interstate Law Enforcement Telecommunication System, and be notified of life-threatening cases through the NCIC flagging system is crucial to NCMEC's mission of providing advice and technical assistance to law enforcement.

NISMART II

Under the Missing Children's Assistance Act, OJJDP is authorized to conduct periodic studies of the scope of the problem of missing children in the United States. The first national study was conducted in 1988, with results published in 1990. In FY 1995, OJJDP funded NISMART II, the second national study of missing, abducted, runaway, and thrownaway children in the United States. Temple University received funding in FY 1995 to conduct this study, which builds on the strengths and addresses some of the weaknesses of the initial NISMART study. Temple has contracted with the University of New Hampshire Survey Research Laboratory and Westat, Inc., to carry out specific components of the study and provide extensive background knowledge about the NISMART study. The NISMART II study is designed to (1) revise and enhance the original NISMART definitions, (2) survey approximately 23,000 households by telephone to determine how many children are missing on an annual basis, (3) survey law enforcement agencies to determine the annual frequency of child abductions, (4) survey approximately 10,000 youth by telephone to understand what happens during missing children episodes, (5) interview directors of residential facilities and institutions to determine how many residents run away; and (6) analyze data on thrownaway children from a related survey of community professionals.

The findings from these surveys will provide updated estimates on the number of missing children each year in the United States. Preliminary findings focusing on the area of stereotypical kidnaping are expected to be available in late 1999 and a final report completed in FY 2000. An OJJDP Fact Sheet documenting the scope of the research, definition revisions, and methodology changes will be published in FY 1999.

Effective Community-Based Approaches for Dealing With Missing and Exploited Children

In FY 1995, the American Bar Association (ABA) was awarded an 18-month grant to study effective community-based approaches for dealing with missing and exploited children. The objectives of Phase I of this study were to (1) conduct a national search for communities that have implemented a multiagency response to missing and exploited children and their families, (2) select five communities with working multiagency responses that hold promise for replication, (3) evaluate these five communities' responses, and (4) prepare a final report. Phase I was completed in July 1997. In Phase II, which started in August 1997, the ABA is preparing a final report that synthesizes research findings from Phase I into a modular training curriculum to help communities plan, implement, and evaluate a multiagency response to missing and exploited children and their families. Phase II of the project will be completed in FY 1999.

Parent Resource Support Network

In FY 1997, OJJDP entered into a competitively awarded 3-year cooperative agreement with Public Administration Services (PAS) to develop and maintain a parent support network. The goal of this project is to stimulate development of a network of screened and trained parent volunteers who will provide assistance and advice to other victim parents.

In FY 1998, PAS installed a case management system to document referrals and assistance activity, recruited and trained parent mentors, and began direct service delivery to requesting parents. In FY 1999, OJJDP will provide supplemental funding to PAS to continue providing direct services to families searching for their children.

Jimmy Ryce Law Enforcement Training Center

In FY 1997 OJJDP, in partnership with the National Center for Missing and Exploited Children, the FBI, and OJJDP grantee Fox Valley Technical College, developed and implemented the Jimmy Ryce Law Enforcement Training Center (JRLETC) program. JRLETC offers two law enforcement training tracks that are designed to improve the national investigative response to missing children cases.

JRLETC's Chief Executive Officer (CEO) seminars approach missing children cases from a management perspective and offer information regarding coordination and communication issues, resource assessment, legal concerns, and policy development for police chiefs and sheriffs. The Responding to Missing and Exploited Children (REMAC) course offers modules focusing on investigative techniques for all aspects of missing children cases. In FY 1998, 402 police chiefs and sheriffs and 458 investigators representing law enforcement agencies from every State participated in at least one of the JRLETC programs.

Congress appropriated $1,250,000 in FY 1998 to continue operation of the Jimmy Ryce Law Enforcement Training

Center. OJJDP, NCMEC, the FBI, and FVTC will continue to provide training and technical assistance through JRLETC and the onsite technical assistance program to respond to the numerous requests for assistance from JRLETC graduates.

Under the FY 1999 JRLETC appropriation, OJJDP will award $500,000 to FVTC to support regional REMAC courses, with the remaining $750,000 to be awarded to NCMEC to continue the CEO seminars and provide onsite technical assistance. In addition, NCMEC will draft a model policy to assist law enforcement executives plan response protocols for their communities.

No additional applications will be solicited in FY 1999.

Criminal Parental Kidnaping Training and Technical Assistance

In FY 1997, OJJDP supplemented an initial competitive award by funding the American Prosecutors Research Institute (APRI) to provide parental abduction training and technical assistance for prosecutors and to develop a training course pertaining to the prosecution of child exploitation cases. Child exploitation prosecutions are among the most complicated that prosecutors confront because of the age and immaturity of victims, societal and law enforcement attitudes toward these victims, the need for specialized understanding of the dynamics of sexual exploitation, and the jurisdictional and communication difficulties resulting from the involvement of numerous agencies. To effectively handle such cases, prosecutors must approach victims with sensitivity and an understanding of the psychological dynamics involved.

In FY 1998, APRI delivered training to 60 prosecutors and provided technical assistance to more than 400 prosecutors and investigators on an as-needed basis. In addition, APRI disseminated a quarterly newsletter, maintained an up-to-date parental kidnaping and child exploitation database that included a compilation of statutes and case law summaries, and developed the legal modules for the Protecting Children Online and Protecting Children Online Unit Commander courses and assisted in the national Internet Crimes Against Children teleconference.

In FY 1999, while continuing, updating, and expanding its current technical assistance activities, APRI would offer four training courses for prosecutors in two areas: child exploitation and parental kidnaping. The parental abduction course would concentrate on difficult case strategies, resource availability, preventive measures, and recovery techniques. The child exploitation course would discuss legal issues pertaining to computer search and seizures, juvenile prostitution, child pornography, and the emerging threat posed by criminals using Internet technology to victimize children. OJJDP proposes to provide supplemental funding to APRI in FY 1999.

National Center on Child Fatality Review

In FY 1997, OJJDP awarded a grant to the National Center on Child Fatality Review (NCCFR) in Los Angeles, California, to develop State and local uniform reporting definitions and generic child fatality review team protocols for consideration by communities working on improving child death investigations.

NCCFR developed a model for integrating data among the Criminal Justice, Vital Statistics, and Social Services Child Abuse Indices. NCCFR also selected a national advisory board, which is composed of representatives from across the country and from relevant disciplines.

In FY 1999, OJJDP proposes to continue support to NCCFR to (1) disseminate the model protocols for integrating the data mentioned above to State and local child fatality review teams and other relevant agencies; (2) develop a Web site and update it with journal articles, references, new studies, new findings, and new resources; (3) maintain paper and electronic directories of State and local child fatality review teams, national associations, and Federal agency contacts; (4) maintain a listing of contacts for all areas relating to child victimization and death; (5) provide information and training materials on basic team management and special problems such as confidentiality, risk assessment, and special case circumstances; (6) coordinate teleconferences and Internet meetings of the advisory board; (7) maintain and share published reports of State and local teams; (8) develop, coordinate, and implement multidisciplinary training; and (9) plan for a national conference.

Investigative Case Management for Missing Children Homicides

In FY 1993, OJJDP made a competitive award to the Washington State Attorney General's Office (WAGO) to analyze the solvability factors of missing children homicide investigations. During the course of that research, WAGO collected and analyzed specific characteristics of more than 550 missing child homicide cases. These characteristics were recorded in WAGO's child homicide database.

In FY 1998, WAGO conducted a national search and identified an additional 526 child murder cases for possible inclusion in the database. In FY 1999, OJJDP proposes to continue to provide funding support to WAGO to ensure the vitality and investigative relevance of its child homicide database. This funding would support both the gathering of new case information and the development of specific case studies that will be used to illustrate the research findings in training presentations. In addition, the database would be used by Federal, State, and local law enforcement to perform link analysis by identifying cases with similar characteristics. Law enforcement database inquiries can be made by calling WAGO at 800–345–2793.

FBI Child Abduction and Serial Killer Unit

In FY 1997, OJJDP entered into a 3-year interagency agreement with the FBI's Child Abduction and Serial Killer Unit (CASKU) to expand research to broaden law enforcement's understanding of homicidal pedophiles' selection and luring of their victims, their planning activities, and their efforts to escape prosecution. This information will be used by the FBI and OJJDP in training and technical assistance programs. FY 1998 activities included identification of 300 prospective interview candidates, completion of a 780-question interview protocol, and submission of the protocol for review by various State boards.

In FY 1999, OJJDP will continue funding support to CASKU to complete the research manager employment process to include background screening and begin data collection efforts.

National Child Victimization Conference Support

In FY 1999, OJJDP proposes to provide funding support to national conferences focusing on child abduction, exploitation, and victimization issues. This funding support would include conferences sponsored by the National Children's Advocacy Center, Dallas Police Department, and American Professional Society on the Abuse of Children.

Dated: March 2, 1999.

Shay Bilchik,

Administrator, Office of Juvenile Justice and Delinquency Prevention.

[FR Doc. 99–5671 Filed 3–5–99; 8:45 am]

BILLING CODE 4410–18–P

Reader Aids

Federal Register

Vol. 64, No. 44

Monday, March 8, 1999

CUSTOMER SERVICE AND INFORMATION

Federal Register/Code of Federal Regulations

General Information, indexes and other finding aids	**202–523–5227**
Laws	**523–5227**
Presidential Documents	
Executive orders and proclamations	**523–5227**
The United States Government Manual	**523–5227**
Other Services	
Electronic and on-line services (voice)	**523–4534**
Privacy Act Compilation	**523–3187**
Public Laws Update Service (numbers, dates, etc.)	**523–6641**
TTY for the deaf-and-hard-of-hearing	**523–5229**

ELECTRONIC RESEARCH

World Wide Web

Full text of the daily Federal Register, CFR and other publications:

http://www.access.gpo.gov/nara

Federal Register information and research tools, including Public Inspection List, indexes, and links to GPO Access:

http://www.nara.gov/fedreg

E-mail

PENS (Public Law Electronic Notification Service) is an E-mail service that delivers information about recently enacted Public Laws. To subscribe, send E-mail to

listproc@lucky.fed.gov

with the text message:

subscribe publaws-l <firstname> <lastname>

Use listproc@lucky.fed.gov only to subscribe or unsubscribe to PENS. We cannot respond to specific inquiries at that address.

Reference questions. Send questions and comments about the Federal Register system to:

info@fedreg.nara.gov

The Federal Register staff cannot interpret specific documents or regulations.

FEDERAL REGISTER PAGES AND DATES, MARCH

9905–10100 1
10101–10204 2
10205–10386 3
10387–10554 4
10555–10918 5
10919–11372 8

CFR PARTS AFFECTED DURING MARCH

At the end of each month, the Office of the Federal Register publishes separately a List of CFR Sections Affected (LSA), which lists parts and sections affected by documents published since the revision date of each title.

3 CFR

Proclamations:
7168 10101
7169 10379
7170 10383
7171 10385

Executive Orders:
12852 (Amended by EO 13114) 10099
13114 10099

Administrative Orders:

Presidential Determinations:
No. 99–15 of February 26, 1999 11319

5 CFR

532 ..... 9905, 9905

7 CFR

989 10919
1434 10923
1469 10929

Proposed Rules:
916 11346
917 11346
1823 10235
1956 10235

9 CFR

Proposed Rules:
1 10400
3 10400
113 10400
391 10402

10 CFR

Proposed Rules:
63 10405

11 CFR

Proposed Rules:
2 10405
4 10405
5 10405

12 CFR

3 10194
208 10194
225 10201
325 10194
567 10194

Proposed Rules:
602 10954

14 CFR

25 10740
39 ..... 9906, 9908, 9910, 9911, 9912, 10205, 10208, 10209, 10211, 10213, 10216, 10555, 10557, 10560, 10935
71 ..... 10387, 10562, 10563, 10740, 10937, 10938, 10939, 10940
97 ..... 9912, 9914

Proposed Rules:
39 ..... 9939, 10237, 10578, 10959
71 ..... 9940, 10238, 10239, 10241, 10242, 10243, 10410, 10411, 10962

15 CFR

774 10852
806 10387

16 CFR

Proposed Rules:
1213 10245
1500 10245
1513 10245
1615 10963
1616 10963

17 CFR

228 11103
229 11103
230 ..... 11090, 11095, 11103
239 ..... 11103, 11118
240 10564

Proposed Rules:
210 10579
228 10579
239 11118
240 ..... 9948, 10579, 11124

20 CFR

404 10103

21 CFR

50 10942
177 10943
216 10944
520 ..... 10103, 10389
556 10103
812 10942
874 10947

22 CFR

171 10949

24 CFR

3500 10080

26 CFR

1 10218
602 10218

Proposed Rules:
1 10262
20 10964

27 CFR

13 10949

28 CFR

Proposed Rules:
25 10262

549 10095

33 CFR

62 10104
117 10104

34 CFR

694 10184

39 CFR

20 ..... 9915, 10219
111 10950

40 CFR

52 9916
58 10389
60 10105
271 10111
80 10366
82 10374
136 10391
439 10391
180 ..... 10227, 10233, 10567

Proposed Rules:

Ch. 1 10066
52 ..... 9951, 9952, 10118, 10265, 10342
60 10119
94 10596
97 10118
136 10596
271 10121
372 ..... 9957, 10597
435 10266

42 CFR

Proposed Rules:

447 10412
457 10412

43 CFR

Proposed Rules:

3800 9960

44 CFR

64 9919

Proposed Rules:

77 10181
80 10181
81 10181
82 10181
83 10181
152 10181
220 10181
221 10181
222 10181
207 10181
301 10181
303 10181
306 10181
308 10181
320 10181
324 10181
325 10181
328 10181
333 10181
336 10181

45 CFR

60 9921

Proposed Rules:

92 10412
95 10412
1224 10872
2508 10872

46 CFR

502 9922
510 11156
514 11186
515 11156
520 11218
530 11186
535 11236
545 9922
565 10395
571 9922
572 11236
583 11156

47 CFR

73 9923
90 10395

Proposed Rules:

1 9960
2 10266
95 10266

48 CFR

Ch. 1 ..... 10530, 10552
1 ..... 10531, 10548
4 10531
5 10535
8 10535
11 10538
12 ..... 10531, 10535
13 10538
14 10531
15 10544
16 10538
19 10535
22 10545
25 10548
26 10531
27 10531
31 10547
32 ..... 10531, 10548
41 10531
52 ..... 10531, 10535, 10538, 10545, 10548
53 10548
1806 10571
1815 10573
1819 10571
1842 10573
1852 ..... 10571, 10573

49 CFR

171 ..... 9923, 10742
172 10742
173 10742
174 10742
175 10742
176 10742
177 10742
178 10742
180 10742
571 10786
596 10786
1000—1199 10234

Proposed Rules:

571 ..... 9961, 10604
572 10965

50 CFR

216 9925
285 10576
600 9932
660 9932
679 ..... 9937, 10397, 10398, 10952

Proposed Rules:

216 9965
285 10438
600 10438
622 ..... 10612, 10613
630 10438
635 10438
644 10438
660 10439
678 10438

REMINDERS

The items in this list were editorially compiled as an aid to Federal Register users. Inclusion or exclusion from this list has no legal significance.

RULES GOING INTO EFFECT MARCH 8, 1999

AGRICULTURE DEPARTMENT

Food Safety and Inspection Service

Meat and poultry inspection:

Cooked beef, roast beef, and cooked corned beef products, etc.; performance standards; published 1-6-99

COMMERCE DEPARTMENT

International Trade Administration

North American Free Trade Agreement (NAFTA); binational panel reviews:

Circular welded non-alloy steel pipe and tube from—

Mexico; published 1-6-99

ENVIRONMENTAL PROTECTION AGENCY

Air quality implementation plans; approval and promulgation; various States:

Florida; published 1-7-99

Illinois; published 1-6-99

Kentucky; published 1-5-99

Louisiana; published 1-5-99

HEALTH AND HUMAN SERVICES DEPARTMENT

Food and Drug Administration

Food additives:

Polymers—

Ethylene/propylene copolymers; published 3-8-99

Protection of human subjects:

Emergency research activities in cases of life-threatening medical conditions; informed consent requirements, exceptions; technical amendment; published 3-8-99

TRANSPORTATION DEPARTMENT

Federal Aviation Administration

Airworthiness directives:

Airbus; published 2-19-99

Boeing; published 2-19-99

Class D and Class E airspace; published 2-5-99

COMMENTS DUE NEXT WEEK

AGRICULTURE DEPARTMENT

Agricultural Marketing Service

Hazelnuts grown in—

Oregon and Washington; comments due by 3-15-99; published 1-14-99

AGRICULTURE DEPARTMENT

Animal and Plant Health Inspection Service

Livestock and poultry disease and control:

Pseudorabies in swine; payment of indemnity; comments due by 3-16-99; published 1-15-99

Plant-related quarantine, foreign:

Unmanufactured wood articles; solid wood packing material; comments due by 3-16-99; published 1-20-99

CONSUMER PRODUCT SAFETY COMMISSION

Poison prevention packaging:

Child-resistant packaging requirements—

Household products containing methacrylic acid; comments due by 3-15-99; published 12-30-98

DEFENSE DEPARTMENT

Acquisition regulations:

Para-aramid fibers and yarns; comments due by 3-16-99; published 1-15-99

Taxpayer identification numbers and commercial and government entity codes; comments due by 3-16-99; published 1-15-99

ENVIRONMENTAL PROTECTION AGENCY

Air pollutants, hazardous; national emission standards:

Ferroalloys production, etc.; comments due by 3-15-99; published 2-12-99

Air pollutants; hazardous; national emission standards:

Glycol ethers category; redefinition; comments due by 3-15-99; published 1-12-99

Air pollution control; new motor vehicles and engines:

Compression-ignition marine engines at or above 37 kilowatts; comments due by 3-15-99; published 3-5-99

Air programs:

State program approvals and delegation of Federal authorities; comments due by 3-15-99; published 1-12-99

Air quality implementation plans; approval and promulgation; various States:

California; comments due by 3-15-99; published 2-11-99

Illinois; comments due by 3-19-99; published 2-17-99

New Jersey; comments due by 3-17-99; published 1-22-99

Water pollution; effluent guidelines for point source categories:

Centralized waste treatment facilities; comments due by 3-15-99; published 1-13-99

FEDERAL COMMUNICATIONS COMMISSION

Common carrier services:

Telecommunications Act of 1996; implementation—

Unauthorized changes of consumers' long distance carriers (slamming); subscriber carrier selection changes; comments due by 3-18-99; published 2-16-99

Radio stations; table of assignments:

New Hampshire; comments due by 3-15-99; published 2-4-99

New York; comments due by 3-15-99; published 2-4-99

North Dakota; comments due by 3-15-99; published 2-4-99

Oklahoma; comments due by 3-15-99; published 2-4-99

Vermont; comments due by 3-15-99; published 2-4-99

FEDERAL RESERVE SYSTEM

Availability of funds and collection of checks (Regulation CC):

Nonlocal check availability schedule; maximum time limit on hold shortened; comments due by 3-15-99; published 12-15-98

HOUSING AND URBAN DEVELOPMENT DEPARTMENT

Mortgage and loan insurance programs:

Single family mortgage insurance—

Informed consumer choice disclosure; comments due by 3-18-99; published 2-16-99

INTERIOR DEPARTMENT

Indian Affairs Bureau

Transportation Equity Act for 21st Century; implementation:

Indian Reservation Roads Negotiated Rulemaking Committee; membership; comments due by 3-15-99; published 2-11-99

INTERIOR DEPARTMENT

Fish and Wildlife Service

Endangered and threatened species:

Redband trout; comments due by 3-16-99; published 1-6-99

INTERIOR DEPARTMENT

Minerals Management Service

Royalty and offshore management programs; order appeals; comments due by 3-15-99; published 1-12-99

INTERIOR DEPARTMENT

Hearings and Appeals Office, Interior Department

Minerals Management Service; royalty and offshore management programs; order appeals; comments due by 3-15-99; published 1-12-99

INTERIOR DEPARTMENT

Surface Mining Reclamation and Enforcement Office

Permanent program and abandoned mine land reclamation plan submissions:

Texas; comments due by 3-15-99; published 2-12-99

LABOR DEPARTMENT

Nationwide employment statistics system; election process for State agency representatives for consultations with Labor Department; comments due by 3-18-99; published 12-18-98

NORTHEAST DAIRY COMPACT COMMISSION

Over-order price regulations:

Milk handlers; administrative assessment; comments due by 3-17-99; published 1-28-99

NUCLEAR REGULATORY COMMISSION

Biproduct material; domestic licensing:

Industrial devices containing byproduct material; information requirements;

comments due by 3-16-99; published 12-2-98

SMALL BUSINESS ADMINISTRATION

Government contracting programs:

Contract bundling; comments due by 3-15-99; published 1-13-99

SOCIAL SECURITY ADMINISTRATION

Social security benefits and supplemental security income:

Federal old age, survivors and disability insurance and aged, blind, and disabled—

Substantial gainful activity amounts; average monthly earnings guidelines; comments due by 3-18-99; published 2-16-99

TRANSPORTATION DEPARTMENT

Federal Aviation Administration

Airworthiness directives:

Agusta S.p.A.; comments due by 3-19-99; published 2-17-99

Ayres Corp.; comments due by 3-15-99; published 1-13-99

Bell; comments due by 3-15-99; published 1-12-99

Boeing; comments due by 3-15-99; published 1-28-99

British Aerospace; comments due by 3-15-99; published 2-17-99

Industrie Aeronautiche e Meccaniche; comments due by 3-19-99; published 2-18-99

Robinson Helicopter Co.; comments due by 3-16-99; published 1-15-99

Sikorsky; comments due by 3-16-99; published 1-15-99

Class D and Class E airspace; comments due by 3-18-99; published 2-1-99

Class E airspace; comments due by 3-15-99; published 1-26-99

Federal airways; comments due by 3-15-99; published 1-25-99

TREASURY DEPARTMENT

Internal Revenue Service

Excise taxes:

Prepaid telephone cards; communications excise tax; comments due by 3-17-99; published 12-17-98

Income taxes and employment taxes and collection of income taxes at source:

Retirement plans; distributions notice and consent requirements; new technologies; comments due by 3-18-99; published 12-18-98

Income taxes:

Qualified retirement plans, etc.—

Relief from disqualification for plans accepting rollovers; comments due by 3-17-99; published 12-17-98

Procedure and administration:

Payment of internal revenue taxes by credit card and debit card; cross-reference; and payment by check or money order; comments due by 3-15-99; published 12-15-98

VETERANS AFFAIRS DEPARTMENT

Board of Veterans Appeals:

Appeals regulations and rules of practice—

Board decisions revised on grounds of clear and unmistakable error; representatives notification; comments due by 3-15-99; published 2-12-99

CFR CHECKLIST

This checklist, prepared by the Office of the Federal Register, is published weekly. It is arranged in the order of CFR titles, stock numbers, prices, and revision dates.

An asterisk (*) precedes each entry that has been issued since last week and which is now available for sale at the Government Printing Office.

A checklist of current CFR volumes comprising a complete CFR set, also appears in the latest issue of the LSA (List of CFR Sections Affected), which is revised monthly.

The CFR is available free on-line through the Government Printing Office's GPO Access Service at http://www.access.gpo.gov/nara/cfr/index.html. For information about GPO Access call the GPO User Support Team at 1-888-293-6498 (toll free) or 202-512-1530.

The annual rate for subscription to all revised paper volumes is $951.00 domestic, $237.75 additional for foreign mailing.

Mail orders to the Superintendent of Documents, Attn: New Orders, P.O. Box 371954, Pittsburgh, PA 15250–7954. All orders must be accompanied by remittance (check, money order, GPO Deposit Account, VISA, Master Card, or Discover). Charge orders may be telephoned to the GPO Order Desk, Monday through Friday, at **(202) 512–1800** from 8:00 a.m. to 4:00 p.m. eastern time, or FAX your charge orders to **(202) 512-2250**.

Title	Stock Number	Price	Revision Date
1, 2 (2 Reserved)	(869–034–00001–1)	5.00	[5] Jan. 1, 1998
3 (1997 Compilation and Parts 100 and 101)	(869–034–00002–9)	19.00	[1] Jan. 1, 1998
4	(869–034–00003–7)	7.00	[5] Jan. 1, 1998
5 Parts:			
*1–699	(869–038–00004–1)	37.00	Jan. 1, 1999
700–1199	(869–034–00005–3)	26.00	Jan. 1, 1998
1200–End, 6 (6 Reserved)	(869–034–00006–1)	39.00	Jan. 1, 1998
7 Parts:			
1–26	(869–034–00007–0)	24.00	Jan. 1, 1998
27–52	(869–034–00008–8)	30.00	Jan. 1, 1998
53–209	(869–034–00009–6)	20.00	Jan. 1, 1998
210–299	(869–034–00010–0)	44.00	Jan. 1, 1998
300–399	(869–034–00011–8)	24.00	Jan. 1, 1998
400–699	(869–034–00012–6)	33.00	Jan. 1, 1998
700–899	(869–034–00013–4)	30.00	Jan. 1, 1998
900–999	(869–034–00014–2)	39.00	Jan. 1, 1998
1000–1199	(869–034–00015–1)	44.00	Jan. 1, 1998
1200–1599	(869–034–00016–9)	34.00	Jan. 1, 1998
1600–1899	(869–034–00017–7)	58.00	Jan. 1, 1998
1900–1939	(869–034–00018–5)	18.00	Jan. 1, 1998
1940–1949	(869–034–00019–3)	33.00	Jan. 1, 1998
1950–1999	(869–034–00020–7)	40.00	Jan. 1, 1998
2000–End	(869–034–00021–5)	24.00	Jan. 1, 1998
8	(869–034–00022–3)	33.00	Jan. 1, 1998
9 Parts:			
1–199	(869–034–00023–1)	40.00	Jan. 1, 1998
200–End	(869–034–00024–0)	33.00	Jan. 1, 1998
10 Parts:			
0–50	(869–034–00025–8)	39.00	Jan. 1, 1998
51–199	(869–034–00026–6)	32.00	Jan. 1, 1998
200–499	(869–034–00027–4)	31.00	Jan. 1, 1998
500–End	(869–034–00028–2)	43.00	Jan. 1, 1998
11	(869–034–00029–1)	19.00	Jan. 1, 1998
12 Parts:			
1–199	(869–034–00030–4)	17.00	Jan. 1, 1998
200–219	(869–034–00031–2)	21.00	Jan. 1, 1998
220–299	(869–034–00032–1)	39.00	Jan. 1, 1998
300–499	(869–034–00033–9)	23.00	Jan. 1, 1998
500–599	(869–034–00034–7)	24.00	Jan. 1, 1998
600–End	(869–034–00035–5)	44.00	Jan. 1, 1998
13	(869–034–00036–3)	23.00	Jan. 1, 1998
14 Parts:			
1–59	(869–034–00037–1)	47.00	Jan. 1, 1998
60–139	(869–034–00038–0)	40.00	Jan. 1, 1998
140–199	(869–034–00039–8)	16.00	Jan. 1, 1998
200–1199	(869–034–00040–1)	29.00	Jan. 1, 1998
1200–End	(869–034–00041–0)	23.00	Jan. 1, 1998
15 Parts:			
0–299	(869–034–00042–8)	22.00	Jan. 1, 1998
300–799	(869–034–00043–6)	33.00	Jan. 1, 1998
800–End	(869–034–00044–4)	23.00	Jan. 1, 1998
16 Parts:			
0–999	(869–034–00045–2)	30.00	Jan. 1, 1998
1000–End	(869–034–00046–1)	33.00	Jan. 1, 1998
17 Parts:			
1–199	(869–034–00048–7)	27.00	Apr. 1, 1998
200–239	(869–034–00049–5)	32.00	Apr. 1, 1998
240–End	(869–034–00050–9)	40.00	Apr. 1, 1998
18 Parts:			
1–399	(869–034–00051–7)	45.00	Apr. 1, 1998
400–End	(869–034–00052–5)	13.00	Apr. 1, 1998
19 Parts:			
1–140	(869–034–00053–3)	34.00	Apr. 1, 1998
141–199	(869–034–00054–1)	33.00	Apr. 1, 1998
200–End	(869–034–00055–0)	15.00	Apr. 1, 1998
20 Parts:			
1–399	(869–034–00056–8)	29.00	Apr. 1, 1998
400–499	(869–034–00057–6)	28.00	Apr. 1, 1998
500–End	(869–034–00058–4)	44.00	Apr. 1, 1998
21 Parts:			
1–99	(869–034–00059–2)	21.00	Apr. 1, 1998
100–169	(869–034–00060–6)	27.00	Apr. 1, 1998
170–199	(869–034–00061–4)	28.00	Apr. 1, 1998
200–299	(869–034–00062–2)	9.00	Apr. 1, 1998
300–499	(869–034–00063–1)	50.00	Apr. 1, 1998
500–599	(869–034–00064–9)	28.00	Apr. 1, 1998
600–799	(869–034–00065–7)	9.00	Apr. 1, 1998
800–1299	(869–034–00066–5)	32.00	Apr. 1, 1998
1300–End	(869–034–00067–3)	12.00	Apr. 1, 1998
22 Parts:			
1–299	(869–034–00068–1)	41.00	Apr. 1, 1998
300–End	(869–034–00069–0)	31.00	Apr. 1, 1998
23	(869–034–00070–3)	25.00	Apr. 1, 1998
24 Parts:			
0–199	(869–034–00071–1)	32.00	Apr. 1, 1998
200–499	(869–034–00072–0)	28.00	Apr. 1, 1998
500–699	(869–034–00073–8)	17.00	Apr. 1, 1998
700–1699	(869–034–00074–6)	45.00	Apr. 1, 1998
1700–End	(869–034–00075–4)	17.00	Apr. 1, 1998
25	(869–034–00076–2)	42.00	Apr. 1, 1998
26 Parts:			
§§ 1.0-1–1.60	(869–034–00077–1)	26.00	Apr. 1, 1998
§§ 1.61–1.169	(869–034–00078–9)	48.00	Apr. 1, 1998
§§ 1.170–1.300	(869–034–00079–7)	31.00	Apr. 1, 1998
§§ 1.301–1.400	(869–034–00080–1)	23.00	Apr. 1, 1998
§§ 1.401–1.440	(869–034–00081–9)	39.00	Apr. 1, 1998
§§ 1.441-1.500	(869-034-00082-7)	29.00	Apr. 1, 1998
§§ 1.501–1.640	(869–034–00083–5)	27.00	Apr. 1, 1998
§§ 1.641–1.850	(869–034–00084–3)	32.00	Apr. 1, 1998
§§ 1.851–1.907	(869–034–00085–1)	36.00	Apr. 1, 1998
§§ 1.908–1.1000	(869–034–00086–0)	35.00	Apr. 1, 1998
§§ 1.1001–1.1400	(869–034–00087–8)	38.00	Apr. 1, 1998
§§ 1.1401–End	(869–034–00088–6)	51.00	Apr. 1, 1998
2–29	(869–034–00089–4)	36.00	Apr. 1, 1998
30–39	(869–034–00090–8)	25.00	Apr. 1, 1998
40–49	(869–034–00091–6)	16.00	Apr. 1, 1998
50–299	(869–034–00092–4)	19.00	Apr. 1, 1998
300–499	(869–034–00093–2)	34.00	Apr. 1, 1998
500–599	(869–034–00094–1)	10.00	Apr. 1, 1998
600–End	(869–034–00095–9)	9.00	Apr. 1, 1998
27 Parts:			
1–199	(869–034–00096–7)	49.00	Apr. 1, 1998

Title	Stock Number	Price	Revision Date
200–End	(869–034–00097–5)	17.00	[6] Apr. 1, 1998
28 Parts:			
0-42	(869–034–00098–3)	36.00	July 1, 1998
43-end	(869-034-00099-1)	30.00	July 1, 1998
29 Parts:			
0–99	(869–034–00100–9)	26.00	July 1, 1998
100–499	(869–034–00101–7)	12.00	July 1, 1998
500–899	(869–034–00102–5)	40.00	July 1, 1998
900–1899	(869–034–00103–3)	20.00	July 1, 1998
1900–1910 (§§ 1900 to 1910.999)	(869–034–00104–1)	44.00	July 1, 1998
1910 (§§ 1910.1000 to end)	(869–034–00105–0)	27.00	July 1, 1998
1911–1925	(869–034–00106–8)	17.00	July 1, 1998
1926	(869–034–00107–6)	30.00	July 1, 1998
1927–End	(869–034–00108–4)	41.00	July 1, 1998
30 Parts:			
1–199	(869–034–00109–2)	33.00	July 1, 1998
200–699	(869–034–00110–6)	29.00	July 1, 1998
700–End	(869–034–00111–4)	33.00	July 1, 1998
31 Parts:			
0–199	(869–034–00112–2)	20.00	July 1, 1998
200–End	(869–034–00113–1)	46.00	July 1, 1998
32 Parts:			
1–39, Vol. I		15.00	[2] July 1, 1984
1–39, Vol. II		19.00	[2] July 1, 1984
1–39, Vol. III		18.00	[2] July 1, 1984
1–190	(869–034–00114–9)	47.00	July 1, 1998
191–399	(869–034–00115–7)	51.00	July 1, 1998
400–629	(869–034–00116–5)	33.00	July 1, 1998
630–699	(869–034–00117–3)	22.00	[4] July 1, 1998
700–799	(869–034–00118–1)	26.00	July 1, 1998
800–End	(869–034–00119–0)	27.00	July 1, 1998
33 Parts:			
1–124	(869–034–00120–3)	29.00	July 1, 1998
125–199	(869–034–00121–1)	38.00	July 1, 1998
200–End	(869–034–00122–0)	30.00	July 1, 1998
34 Parts:			
1–299	(869–034–00123–8)	27.00	July 1, 1998
300–399	(869–034–00124–6)	25.00	July 1, 1998
400–End	(869–034–00125–4)	44.00	July 1, 1998
35	(869–034–00126–2)	14.00	July 1, 1998
36 Parts			
1–199	(869–034–00127–1)	20.00	July 1, 1998
200–299	(869–034–00128–9)	21.00	July 1, 1998
300–End	(869–034–00129–7)	35.00	July 1, 1998
37	(869–034–00130–1)	27.00	July 1, 1998
38 Parts:			
0–17	(869–034–00131–9)	34.00	July 1, 1998
18–End	(869–034–00132–7)	39.00	July 1, 1998
39	(869–034–00133–5)	23.00	July 1, 1998
40 Parts:			
1–49	(869–034–00134–3)	31.00	July 1, 1998
50–51	(869–034–00135–1)	24.00	July 1, 1998
52 (52.01–52.1018)	(869–034–00136–0)	28.00	July 1, 1998
52 (52.1019–End)	(869–034–00137–8)	33.00	July 1, 1998
53–59	(869–034–00138–6)	17.00	July 1, 1998
60	(869–034–00139–4)	53.00	July 1, 1998
61–62	(869–034–00140–8)	18.00	July 1, 1998
63	(869–034–00141–6)	57.00	July 1, 1998
64–71	(869–034–00142–4)	11.00	July 1, 1998
72–80	(869–034–00143–2)	36.00	July 1, 1998
81–85	(869–034–00144–1)	31.00	July 1, 1998
86	(869–034–00144–9)	53.00	July 1, 1998
87-135	(869–034–00146–7)	47.00	July 1, 1998
136–149	(869–034–00147–5)	37.00	July 1, 1998
150–189	(869–034–00148–3)	34.00	July 1, 1998
190–259	(869–034–00149–1)	23.00	July 1, 1998
260–265	(869–034–00150–9)	29.00	July 1, 1998
266–299	(869–034–00151–3)	33.00	July 1, 1998
300–399	(869–034–00152–1)	26.00	July 1, 1998
400–424	(869–034–00153–0)	33.00	July 1, 1998
425–699	(869–034–00154–8)	42.00	July 1, 1998
700–789	(869–034–00155–6)	41.00	July 1, 1998
790–End	(869–034–00156–4)	22.00	July 1, 1998
41 Chapters:			
1, 1–1 to 1–10		13.00	[3] July 1, 1984
1, 1–11 to Appendix, 2 (2 Reserved)		13.00	[3] July 1, 1984
3–6		14.00	[3] July 1, 1984
7		6.00	[3] July 1, 1984
8		4.50	[3] July 1, 1984
9		13.00	[3] July 1, 1984
10–17		9.50	[3] July 1, 1984
18, Vol. I, Parts 1–5		13.00	[3] July 1, 1984
18, Vol. II, Parts 6–19		13.00	[3] July 1, 1984
18, Vol. III, Parts 20–52		13.00	[3] July 1, 1984
19–100		13.00	[3] July 1, 1984
1–100	(869–034–00157–2)	13.00	July 1, 1998
101	(869–034–00158–1)	37.00	July 1, 1998
102–200	(869–034–00158–9)	15.00	July 1, 1998
201–End	(869–034–00160–2)	13.00	July 1, 1998
42 Parts:			
1–399	(869–034–00161–1)	34.00	Oct. 1, 1998
400–429	(869–034–00162–9)	41.00	Oct. 1, 1998
430–End	(869–034–00163–7)	51.00	Oct. 1, 1998
43 Parts:			
1–999	(869–034–00164–5)	30.00	Oct. 1, 1998
1000–end	(869–034–00165–3)	48.00	Oct. 1, 1998
44	(869–034–00166–1)	48.00	Oct. 1, 1998
45 Parts:			
1–199	(869–034–00167–0)	30.00	Oct. 1, 1998
200–499	(869–034–00168–8)	18.00	Oct. 1, 1998
500–1199	(869–034–00169–6)	29.00	Oct. 1, 1998
1200–End	(869–034–00170–0)	39.00	Oct. 1, 1998
46 Parts:			
1–40	(869–034–00171–8)	26.00	Oct. 1, 1998
41–69	(869–034–00172–6)	21.00	Oct. 1, 1998
70–89	(869–034–00173–4)	8.00	Oct. 1, 1998
90–139	(869–034–00174–2)	26.00	Oct. 1, 1998
140–155	(869–034–00175–1)	14.00	Oct. 1, 1998
156–165	(869–034–00176–9)	19.00	Oct. 1, 1998
166–199	(869–034–00177–7)	25.00	Oct. 1, 1998
200–499	(869–034–00178–5)	22.00	Oct. 1, 1998
500–End	(869–034–00179–3)	16.00	Oct. 1, 1998
47 Parts:			
0–19	(869–034–00180–7)	36.00	Oct. 1, 1998
20–39	(869–034–00181–5)	27.00	Oct. 1, 1998
40–69	(869–034–00182–3)	24.00	Oct. 1, 1998
70–79	(869–034–00183–1)	37.00	Oct. 1, 1998
80–End	(869–034–00184–0)	40.00	Oct. 1, 1998
48 Chapters:			
1 (Parts 1–51)	(869–034–00185–8)	51.00	Oct. 1, 1998
1 (Parts 52–99)	(869–034–00186–6)	29.00	Oct. 1, 1998
2 (Parts 201–299)	(869–034–00187–4)	34.00	Oct. 1, 1998
3–6	(869–034–00188–2)	29.00	Oct. 1, 1998
7–14	(869–034–00189–1)	32.00	Oct. 1, 1998
15–28	(869–034–00190–4)	33.00	Oct. 1, 1998
29–End	(869–034–00191–2)	24.00	Oct. 1, 1998
49 Parts:			
1–99	(869–034–00192–1)	31.00	Oct. 1, 1998
100–185	(869–034–00193–9)	50.00	Oct. 1, 1998
186–199	(869–034–00194–7)	11.00	Oct. 1, 1998
200–399	(869–034–00195–5)	46.00	Oct. 1, 1998
*400–999	(869–034–00196–3)	54.00	Oct. 1, 1998
1000–1199	(869–034–00197–1)	17.00	Oct. 1, 1998
1200–End	(869–034–00198–0)	13.00	Oct. 1, 1998
50 Parts:			
1–199	(869–034–00199–8)	42.00	Oct. 1, 1998
200–599	(869–034–00200–5)	22.00	Oct. 1, 1998
600–End	(869–034–00201–3)	33.00	Oct. 1, 1998

Title	Stock Number	Price	Revision Date
CFR Index and Findings Aids	(869–034–00049–6)	46.00	Jan. 1, 1998
Complete 1998 CFR set		951.00	1998
Microfiche CFR Edition:			
Subscription (mailed as issued)		247.00	1998
Individual copies		1.00	1998
Complete set (one-time mailing)		247.00	1997
Complete set (one-time mailing)		264.00	1996

[1] Because Title 3 is an annual compilation, this volume and all previous volumes should be retained as a permanent reference source.

[2] The July 1, 1985 edition of 32 CFR Parts 1–189 contains a note only for Parts 1–39 inclusive. For the full text of the Defense Acquisition Regulations in Parts 1–39, consult the three CFR volumes issued as of July 1, 1984, containing those parts.

[3] The July 1, 1985 edition of 41 CFR Chapters 1–100 contains a note only for Chapters 1 to 49 inclusive. For the full text of procurement regulations in Chapters 1 to 49, consult the eleven CFR volumes issued as of July 1, 1984 containing those chapters.

[4] No amendments to this volume were promulgated during the period July 1, 1997 to June 30, 1998. The volume issued July 1, 1997, should be retained.

[5] No amendments to this volume were promulgated during the period January 1, 1997 through December 31, 1997. The CFR volume issued as of January 1, 1997 should be retained.

[6] No amendments to this volume were promulgated during the period April 1, 1997, through April 1, 1998. The CFR volume issued as of April 1, 1997, should be retained.