3–3–99
Vol. 64 No. 41
Pages 10205–10386

federal register

Wednesday
March 3, 1999

Briefings on how to use the Federal Register
For information on briefings in Washington, DC, see announcement on the inside cover of this issue.

Now Available Online via
GPO Access

Free online access to the official editions of the *Federal Register, the Code of Federal Regulations* and other Federal Register publications is available on *GPO Access*, a service of the U.S. Government Printing Office at:

http://www.access.gpo.gov/nara/index.html

For additional information on ***GPO Access*** products, services and access methods, see page II or contact the *GPO Access* User Support Team via:

★ Phone: toll-free: 1-888-293-6498

★ Email: gpoaccess@gpo.gov

Attention: Federal Agencies

Plain Language Tools Are Now Available

The Office of the Federal Register offers Plain Language Tools on its Website to help you comply with the President's Memorandum of June 1, 1998—Plain Language in Government Writing (63 FR 31883, June 10, 1998). Our address is: http://www.nara.gov/fedreg

For more in-depth guidance on the elements of plain language, read ''Writing User-Friendly Documents'' on the National Partnership for Reinventing Government (NPR) Website at: http://www.plainlanguage.gov

The **FEDERAL REGISTER** is published daily, Monday through Friday, except official holidays, by the Office of the Federal Register, National Archives and Records Administration, Washington, DC 20408, under the Federal Register Act (44 U.S.C. Ch. 15) and the regulations of the Administrative Committee of the Federal Register (1 CFR Ch. I). The Superintendent of Documents, U.S. Government Printing Office, Washington, DC 20402 is the exclusive distributor of the official edition.

The **Federal Register** provides a uniform system for making available to the public regulations and legal notices issued by Federal agencies. These include Presidential proclamations and Executive Orders, Federal agency documents having general applicability and legal effect, documents required to be published by act of Congress, and other Federal agency documents of public interest.

Documents are on file for public inspection in the Office of the Federal Register the day before they are published, unless the issuing agency requests earlier filing. For a list of documents currently on file for public inspection, see http://www.nara.gov/fedreg.

The seal of the National Archives and Records Administration authenticates the Federal Register as the official serial publication established under the Federal Register Act. Under 44 U.S.C. 1507, the contents of the **Federal Register** shall be judicially noticed.

The **Federal Register** is published in paper and on 24x microfiche. It is also available online at no charge as one of the databases on GPO Access, a service of the U.S. Government Printing Office.

The online edition of the **Federal Register** is issued under the authority of the Administrative Committee of the Federal Register as the official legal equivalent of the paper and microfiche editions (44 U.S.C. 4101 and 1 CFR 5.10). It is updated by 6 a.m. each day the **Federal Register** is published and it includes both text and graphics from Volume 59, Number 1 (January 2, 1994) forward.

GPO Access users can choose to retrieve online **Federal Register** documents as TEXT (ASCII text, graphics omitted), PDF (Adobe Portable Document Format, including full text and all graphics), or SUMMARY (abbreviated text) files. Users should carefully check retrieved material to ensure that documents were properly downloaded.

On the World Wide Web, connect to the **Federal Register** at http://www.access.gpo.gov/nara. Those without World Wide Web access can also connect with a local WAIS client, by Telnet to swais.access.gpo.gov, or by dialing (202) 512-1661 with a computer and modem. When using Telnet or modem, type swais, then log in as guest with no password.

For more information about GPO Access, contact the GPO Access User Support Team by E-mail at gpoaccess@gpo.gov; by fax at (202) 512–1262; or call (202) 512–1530 or 1–888–293–6498 (toll free) between 7 a.m. and 5 p.m. Eastern time, Monday–Friday, except Federal holidays.

The annual subscription price for the **Federal Register** paper edition is $555, or $607 for a combined **Federal Register,** Federal Register Index and List of CFR Sections Affected (LSA) subscription; the microfiche edition of the **Federal Register** including the Federal Register Index and LSA is $220. Six month subscriptions are available for one-half the annual rate. The charge for individual copies in paper form is $8.00 for each issue, or $8.00 for each group of pages as actually bound; or $1.50 for each issue in microfiche form. All prices include regular domestic postage and handling. International customers please add 25% for foreign handling. Remit check or money order, made payable to the Superintendent of Documents, or charge to your GPO Deposit Account, VISA, MasterCard or Discover. Mail to: New Orders, Superintendent of Documents, P.O. Box 371954, Pittsburgh, PA 15250–7954.

There are no restrictions on the republication of material appearing in the **Federal Register.**

How To Cite This Publication: Use the volume number and the page number. Example: 64 FR 12345.

Printed on recycled paper.

SUBSCRIPTIONS AND COPIES

PUBLIC	
Subscriptions:	
Paper or fiche	**202–512–1800**
Assistance with public subscriptions	**512–1806**
General online information	**202–512–1530; 1–888–293–6498**
Single copies/back copies:	
Paper or fiche	**512–1800**
Assistance with public single copies	**512–1803**
FEDERAL AGENCIES	
Subscriptions:	
Paper or fiche	**523–5243**
Assistance with Federal agency subscriptions	**523–5243**

NOW AVAILABLE ONLINE

The October 1998 Office of the Federal Register Document Drafting Handbook

Free, easy online access to the newly revised October 1998 Office of the Federal Register Document Drafting Handbook (DDH) is now available at:

http://www.nara.gov/fedreg/draftres.html

This handbook helps Federal agencies to prepare documents for publication in the **Federal Register.**

For additional information on access, contact the Office of the Federal Register's Technical Support Staff.

Phone: 202–523–3447

E-mail: info@fedreg.nara.gov

FEDERAL REGISTER WORKSHOP

THE FEDERAL REGISTER: WHAT IT IS AND HOW TO USE IT

FOR: Any person who uses the Federal Register and Code of Federal Regulations.

WHO: Sponsored by the Office of the Federal Register.

WHAT: Free public briefings (approximately 3 hours) to present:

1. The regulatory process, with a focus on the Federal Register system and the public's role in the development regulations.
2. The relationship between the Federal Register and Code of Federal Regulations.
3. The important elements of typical Federal Register documents.
4. An introduction to the finding aids of the FR/CFR system.

WHY: To provide the public with access to information necessary to research Federal agency regulations which directly affect them. There will be no discussion of specific agency regulations.

WASHINGTON, DC

WHEN: March 23, 1999 at 9:00 am.

WHERE: Office of the Federal Register
Conference Room
800 North Capitol Street, NW.
Washington, DC
(3 blocks north of Union Station Metro)

RESERVATIONS: 202–523–4538

Contents

Federal Register

Vol. 64, No. 41

Wednesday, March 3, 1999

Agriculture Department
See Animal and Plant Health Inspection Service
See Farm Service Agency
See Food and Nutrition Service
See Grain Inspection, Packers and Stockyards Administration
See National Agricultural Statistics Service
See Rural Business-Cooperative Service
See Rural Housing Service
See Rural Utilities Service

Air Force Department
NOTICES
Meetings:
Scientific Advisory Board, 10279

Animal and Plant Health Inspection Service
NOTICES
Animal welfare:
Farm animals used for nonagricultural purposes, 10268–10269

Antitrust Division
NOTICES
Meetings:
International Competition Policy Advisory Committee, 10322

Barry M. Goldwater Scholarship and Excellence in Education Foundation
NOTICES
Meetings; Sunshine Act, 10271–10272

Census Bureau
NOTICES
Agency information collection activities:
Proposed collection; comment request, 10272–10274

Commerce Department
See Census Bureau
See Export Administration Bureau
See International Trade Administration
See National Institute of Standards and Technology
See National Oceanic and Atmospheric Administration
See Patent and Trademark Office
NOTICES
Agency information collection activities:
Submission for OMB review; comment request, 10272

Committee for the Implementation of Textile Agreements
NOTICES
Cotton, wool, and man-made textiles:
Taiwan, 10278–10279

Consumer Product Safety Commission
PROPOSED RULES
Bunk beds; safety standards, 10245–10262

Defense Department
See Air Force Department
See Navy Department

Delaware River Basin Commission
NOTICES
Meetings and hearings, 10280–10281

Education Department
NOTICES
Agency information collection activities:
Submission for OMB review; comment request, 10281–10282
Grants and cooperative agreements; availability, etc.:
Special education and rehabilitative services—
Children with disabilities; services and results improvement, 10351–10363
Meetings:
Indian Education National Advisory Council, 10282

Employment and Training Administration
NOTICES
Adjustment assistance:
Agip Petroleum Co., 10323
Baker Oil Tools, 10323
Becton Dickinson, 10323
Camp Sports, Inc., et al., 10323–10324
Gesco International, 10324
Herald Handbag Manufacturing Co., 10324
Houston Atlas, Inc., 10324–10325
Knoedler Manufacturers, Inc., 10325
Milton Bradley Wood Products, 10325
North American Refract. et al., 10325–10326
Parsons Pine Products, 10326

Energy Department
See Federal Energy Regulatory Commission
NOTICES
Grants and cooperative agreements; availability, etc.:
Natural and Accelerated Bioremediation Research Program, 10282–10285

Environmental Protection Agency
RULES
Air programs:
Fuel and fuel additives—
St Louis, MO moderate ozone nonattainment area; reformulated gasoline program, 10365–10371
Stratospheric ozone protrection—
Ozone-depleting substances; substitutes list, 10373–10378
Pesticides; tolerances in food, animal feeds, and raw agricultural commodities:
Dicamba (3,6-dichloro-o-anisic acid); correction, 10233–10234
Pyriproxyfen, 10227–10233
PROPOSED RULES
Clean Air Act:
Interstate ozone transport reduction—
Nitrogen oxides budget trading program; Section 126 petitions; findings of significant contribution and rulemaking; technical correction and added documents, 10265–10266, 10341–10350

Water pollution; effluent guidelines for point source categories:
Oil and gas extraction; synthetic-based and other non-aqueous drilling fluids
Correction, 10266
NOTICES
Agency information collection activities:
Proposed collection; comment request, 10290–10294
Meetings:
Science Advisory Board, 10294–10295
Pesticide registration, cancellation, etc.:
BASF Corp., 10295–10296
GB Biosciences Corp. et al., 10296–10299
Pesticides; experimental use permits, etc.:
E.I. du Pont de Nemours & Co., 10299–10300
Rhone-Poulenc AG Co., 10300

Executive Office of the President
See Presidential Documents

Export Administration Bureau
NOTICES
Agency information collection activities:
Proposed collection; comment request, 10274–10275

Farm Service Agency
PROPOSED RULES
Program regulations:
Indian Tribes and tribal corporations; loan debt forgiveness, 10235–10236

Federal Aviation Administration
RULES
Airworthiness directives:
Bell Helicopter Textron, Inc., 10208–10209
Boeing, 10205–10208, 10213–10216
Eurocopter France, 10216–10218
McDonnell Douglas, 10209–10211
New Piper Aircraft, Inc., 10211–10213
PROPOSED RULES
Airworthiness directives:
Raytheon, 10237–10238
Class D and Class E airspace, 10238–10239, 10241–10245
Class E airspace, 10239–10243
NOTICES
Meetings:
Aviation Rulemaking Advisory Committee, 10336

Federal Communications Commission
PROPOSED RULES
Radio services, special:
Personal radio services—
Medical implant communications service in 402-405 MHz band; establishment, 10266–10267
NOTICES
Meetings:
North American Numbering Council, 10300–10301

Federal Election Commission
NOTICES
Meetings; Sunshine Act, 10301

Federal Energy Regulatory Commission
NOTICES
Electric rate and corporate regulation filings:
Storm Lake Power Partners II LLC et al., 10288–10290
Applications, hearings, determinations, etc.:
ANR Pipeline Co., 10285–10286
KN Interstate Gas Transmission Co., 10286
Natural Gas Pipeline Co. of America, 10286
Panhandle Eastern Pipe Line Co., 10286–10287
Reliant Energy Gas Transmission Co., 10287–10288
Trunkline Gas Co., 10288
Union Light, Heat & Power Co., 10288

Federal Highway Administration
NOTICES
Environmental statements; availability, etc.:
Nationwide Differential Global Positioning System Service, 10336–10337
Environmental statements; notice of intent:
Jackson County, OR, 10336

Federal Reserve System
NOTICES
Banks and bank holding companies:
Change in bank control, 10301
Formations, acquisitions, and mergers, 10301–10302
Permissible nonbanking activities, 10302
Meetings; Sunshine Act, 10302

Food and Drug Administration
NOTICES
Food additive petitions:
Alcide Corp. Inc., 10302–10303
Asahi Denka Kogyo K.K., 10304
Human drugs:
Patent extension; regulatory review period determinations—
LumenHance, 10303–10304
Singulair, 10304–10305

Food and Nutrition Service
NOTICES
Food distribution programs:
Nutrition program for elderly; assistance level, 10269–10270

Foreign Claims Settlement Commission
NOTICES
Meetings; Sunshine Act, 10322

Grain Inspection, Packers and Stockyards Administration
NOTICES
Agency designation areas:
Various States, 10270–10271

Health and Human Services Department
See Food and Drug Administration
See Health Care Financing Administration
See National Institutes of Health
See Substance Abuse and Mental Health Services Administration

Health Care Financing Administration
NOTICES
Agency information collection activities:
Proposed collection; comment request, 10305–10306

Housing and Urban Development Department
NOTICES
Agency information collection activities:
Proposed collection; comment request, 10313–10314
Submission for OMB review; comment request, 10314–10315

Interior Department
See Land Management Bureau

Internal Revenue Service
RULES
Income taxes:
Employee Retirement Income Security Act—
Defined benefit and individual account plans; notice of significant reduction in rate of future benefit accrual; correction, 10218
PROPOSED RULES
Income taxes:
Fast-pay stock; financial arrangements recharacterization; correction, 10262
NOTICES
Agency information collection activities:
Proposed collection; comment request, 10338–10339

International Trade Administration
NOTICES
North American Free Trade Agreement (NAFTA); binational panel reviews:
Corrosion-resistant carbon steel flat products and cut-to-length carbon steel plate from—
Canada, 10275

International Trade Commission
NOTICES
Import investigations:
Anhydrous sodium metasilicate from—
France, 10315–10316
Aperture masks from—
Japan and Korea, 10316–10317
Barium chloride from—
China, 10317
Uranium from—
Kazakhstan, 10317–10318

Justice Department
See Antitrust Division
See Foreign Claims Settlement Commission
PROPOSED RULES
National Instant Criminal Background Check System:
Firearms transactions; information retention, 10262–10265
NOTICES
Agency information collection activities:
Proposed collection; comment request, 10318–10320
Submission for OMB review; comment request, 10321–10322

Labor Department
See Employment and Training Administration
See Mine Safety and Health Administration

Land Management Bureau
NOTICES
Meetings:
Gila Box Riparian National Conservation Area Advisory Committee, 10315

Legal Services Corporation
NOTICES
Grants and cooperative agreements; availability, etc.:
Comprehensive integrated statewide delivery systems development; technical assistance, 10328–10329

Maritime Administration
NOTICES
Agency information collection activities:
Proposed collection; comment request, 10337–10338

Mine Safety and Health Administration
NOTICES
Agency information collection activities:
Proposed collection; comment request, 10326–10328

National Aeronautics and Space Administration
NOTICES
Patent licenses; non-exclusive, exclusive, or partially exclusive:
Thermosurgery Technologies, Inc., 10329

National Agricultural Statistics Service
NOTICES
Agency information collection activities:
Proposed collection; comment request, 10271

National Institute of Standards and Technology
NOTICES
Agency information collection activities:
Proposed collection; comment request, 10276

National Institutes of Health
NOTICES
Meetings:
National Cancer Institute, 10308
National Heart, Lung, and Blood Institute, 10308
National Human Genome Research Institute, 10308
National Institute of Allergy and Infectious Diseases, 10310–10311
National Institute of General Medical Sciences, 10311
National Institute of Mental Health, 10308–10309
National Institute on Alcohol Abuse and Alcoholism, 10309–10310
Scientific Review Center, 10306–10307

National Oceanic and Atmospheric Administration
NOTICES
Permits:
Marine mammals, 10276–10277

National Science Foundation
NOTICES
Agency information collection activities:
Submission for OMB review; comment request, 10329–10330

National Women's Business Council
NOTICES
Meetings; Sunshine Act, 10330

Navy Department
NOTICES
Inventions, Government-owned; availability for licensing, 10280
Meetings:
Naval Research Advisory Committee, 10280

Nuclear Regulatory Commission
NOTICES
Environmental statements; availability, etc.:
Fort St. Vrain Independent Spent Fuel Storage Installation, 10330–10331
Sohio Western Mining Co., 10331–10332

Westinghouse Electric Co., 10332–10334
Meetings:
Medical Uses of Isotopes Advisory Committee, 10334

Patent and Trademark Office
NOTICES
Agency information collection activities:
Proposed collection; comment request, 10277–10278

Postal Service
RULES
International Mail Manual:
International priority airmail service; postage rates and service conditions changes, 10219–10227

Presidential Documents
Special observances
Irish-American Heritage Month (Proc. 7169), 10379–10382
Women's History Month (Proc. 7170), 10383–10384
Save Your Vision Week (Proc. 7171), 10385–10386

Public Health Service
See Food and Drug Administration
See National Institutes of Health
See Substance Abuse and Mental Health Services Administration

Rural Business-Cooperative Service
PROPOSED RULES
Program regulations:
Indian Tribes and tribal corporations; loan debt forgiveness, 10235–10236

Rural Housing Service
PROPOSED RULES
Program regulations:
Indian Tribes and tribal corporations; loan debt forgiveness, 10235–10236

Rural Utilities Service
PROPOSED RULES
Program regulations:
Indian Tribes and tribal corporations; loan debt forgiveness, 10235–10236

State Department
NOTICES
Meetings:
Historical Diplomatic Documentation Advisory Committee, 10334
Overseas Presence Advisory Panel, 10334

Statistical Reporting Service
See National Agricultural Statistics Service

Substance Abuse and Mental Health Services Administration
NOTICES
Grants and cooperative agreements; availability, etc.:
Community-initiated interventions, 10311–10313

Surface Transportation Board
RULES
Title 49 (Parts 1000–1199); republication; CFR correction, 10234
NOTICES
Railroad operation, acquisition, construction, etc.:
Grand Trunk Western Railroad Inc., 10338

Textile Agreements Implementation Committee
See Committee for the Implementation of Textile Agreements

Transportation Department
See Federal Aviation Administration
See Federal Highway Administration
See Maritime Administration
See Surface Transportation Board
NOTICES
Agency information collection activities:
Submission for OMB review; comment request, 10334–10335

Treasury Department
See Internal Revenue Service

United States Information Agency
NOTICES
Art objects; importation for exhibition:
Ten Works of Art from the Republic of Korea, 10339

Separate Parts In This Issue

Part II
Environmental Protection Agency, 10341–10350

Part III
Department of Education, 10351–10363

Part IV
Environmental Protection Agency, 10365–10371

Part V
Environmental Protection Agency, 10373–10378

Part VI
The President, 10379–10386

Reader Aids
Consult the Reader Aids section at the end of this issue for phone numbers, online resources, finding aids, reminders, and notice of recently enacted public laws.

CFR PARTS AFFECTED IN THIS ISSUE

A cumulative list of the parts affected this month can be found in the Reader Aids section at the end of this issue.

3 CFR

Proclamations:

7169 10379
7170 10383
7171 10385

7 CFR

Proposed Rules:

1823 (4 documents) 10235
1956 (4 documents) 10235

14 CFR

39 (6 documents) 10205, 10208, 10209, 10211, 10213, 10216

Proposed Rules:

39 10237
71 (5 documents) 10238, 10239, 10241, 10242, 10243

16 CFR

Proposed Rules:

1213 10245
1500 10245
1513 10245

26 CFR

1 10218
602 10218

Proposed Rules:

1 10262

28 CFR

Proposed Rules:

25 10262

39 CFR

20 10219

40 CFR

80 10366
82 10374
180 (2 documents) 10227, 10233

Proposed Rules:

52 (2 documents) 10265, 10342
435 10266

47 CFR

Proposed Rules:

2 10266
95 10266

49 CFR

1000—1199 10234

Rules and Regulations

Federal Register
Vol. 64, No. 41
Wednesday, March 3, 1999

This section of the FEDERAL REGISTER contains regulatory documents having general applicability and legal effect, most of which are keyed to and codified in the Code of Federal Regulations, which is published under 50 titles pursuant to 44 U.S.C. 1510.

The Code of Federal Regulations is sold by the Superintendent of Documents. Prices of new books are listed in the first FEDERAL REGISTER issue of each week.

DEPARTMENT OF TRANSPORTATION

Federal Aviation Administration

14 CFR Part 39

[Docket No. 98–NM–76–AD; Amendment 39–11054; AD 99–05–06]

RIN 2120–AA64

Airworthiness Directives; Boeing Model 747 Series Airplanes

AGENCY: Federal Aviation Administration, DOT.

ACTION: Final rule; request for comments.

SUMMARY: This amendment supersedes an existing airworthiness directive (AD), applicable to certain Boeing Model 747 series airplanes, that currently requires a one-time inspection to detect cracking and corrosion of various areas at all four nacelle struts; and repair, if necessary. This amendment requires new repetitive inspections to detect fatigue cracking or loose or missing fasteners of the aft torque bulkheads of the outboard nacelle struts; and repair, if necessary. In addition, this action expands the applicability of the existing AD to include additional airplanes. This amendment is prompted by a report indicating that cracking was found in the aft torque bulkheads of the outboard nacelle struts, and by the availability of new service instructions for detecting fatigue cracking that would not have been detected by the required actions of the existing AD. The actions specified in this AD are intended to detect and correct such fatigue cracking and loose or missing fasteners, which could result in failure of an outboard nacelle strut diagonal brace load path and possible separation of the nacelle from the wing.

DATES: Effective March 18, 1999.

The incorporation by reference of certain publications listed in the regulations is approved by the Director of the Federal Register as March 18, 1999.

Comments for inclusion in the Rules Docket must be received on or before May 3, 1999.

ADDRESSES: Submit comments in triplicate to the Federal Aviation Administration (FAA), Transport Airplane Directorate, ANM–114, Attention: Rules Docket No. 98–NM–76–AD, 1601 Lind Avenue, SW., Renton, Washington 98055–4056.

The service information referenced in this AD may be obtained from Boeing Commercial Airplane Group, P.O. Box 3707, Seattle, Washington 98124–2207. This information may be examined at the FAA, Transport Airplane Directorate, 1601 Lind Avenue, SW., Renton, Washington; or at the Office of the Federal Register, 800 North Capitol Street, NW., suite 700, Washington, DC.

FOR FURTHER INFORMATION CONTACT: Tamara L. Anderson, Aerospace Engineer, Airframe Branch, ANM–120S, FAA, Transport Airplane Directorate, Seattle Aircraft Certification Office, 1601 Lind Avenue, SW., Renton, Washington 98055–4056; telephone (425) 227–2771; fax (425) 227–1181.

SUPPLEMENTARY INFORMATION: On December 31, 1996, the FAA issued AD 96–26–51, amendment 39–9876 (62 FR 1038, January 8, 1997), applicable to Boeing Model 747 series airplanes equipped with Rolls-Royce-type engines, to require a one-time detailed visual inspection to detect cracking and corrosion of various areas at all four nacelle struts; and repair, if necessary. That action was prompted by reports of cracking of the aft torque bulkhead at the number 1 and number 2 nacelle struts. The actions required by that AD are intended to detect and correct cracking of an inboard or outboard nacelle strut, which could result in failure of the nacelle strut and consequent separation of the nacelle from the wing.

Actions Since Issuance of Previous Rule

A proposal to amend part 39 of the Federal Aviation Regulations (14 CFR part 39) to include an airworthiness directive (AD) that is applicable to certain Boeing Model 747 series airplanes was published in the **Federal Register** on November 24, 1998 (63 FR 64915). That notice of proposed rulemaking (NPRM) proposed to supersede AD 96–26–51 to require new repetitive inspections to detect fatigue cracking or loose or missing fasteners of the aft torque bulkheads of the outboard nacelle struts; and repair, if necessary. In addition, that action proposed to expand the applicability of the existing AD to include additional airplanes.

As stated in the NPRM, subsequent to the issuance of the previous rule, the FAA learned of several new findings: The outboard, but not inboard, strut is susceptible to fatigue cracking of the aft torque bulkhead; additional fatigue cracking was found on another Model 747 series airplane (which also was equipped with Rolls-Royce Model RB211 series engines) at certain locations on the number 4 nacelle strut; outboard struts equipped with other types of engines also may be susceptible to fatigue cracking; and additional nacelle struts were found to have loose fasteners at the attachment between the vertical flange of the lower spar fitting and the aft torque bulkhead.

Since the issuance of that NPRM, the manufacturer reported that cracking of the aft torque bulkhead was recently found at the number 4 pylon on a Model 747–300 series airplane. The aft torque bulkhead web and vertical chords (into the chord radius) were fractured above the lower spar fitting. That airplane had accumulated 43,266 total flight hours and 10,673 total flight cycles, and was powered by Rolls-Royce Model RB211 series engines.

FAA's Determination

In consideration of this new finding of cracking at a threshold lower than that specified by the NPRM, the FAA has determined that, for airplanes powered by Rolls-Royce Model RB211 series engines, the compliance time for accomplishment of the actions required by this AD should be reduced from 12,000 total flight cycles or 90 days to 8,000 total flight cycles or 30 days.

It should be noted that Boeing Alert Service Bulletin 747–54A2184, dated July 3, 1997 (which was cited in the NPRM as the appropriate source of service information), recommends accomplishing the visual inspection within 12,000 total flight cycles. However, for the reasons stated below, the FAA has determined that an interval of 12,000 total flight cycles will not address the identified unsafe condition in a timely manner, and has revised the AD accordingly.

In developing an appropriate compliance time for this AD, the FAA considered not only the manufacturer's recommendation, but the degree of urgency associated with addressing the subject unsafe condition, the average utilization of the affected fleet, and the time necessary to perform the inspection. In light of all of these factors, as discussed earlier, the FAA finds a compliance time of 8,000 total flight cycles or 30 days to be warranted for initiating the required actions (for Groups 1 and 2 airplanes), in that the revised compliance time represents an appropriate interval of time allowable for affected airplanes to continue to operate without compromising safety.

In making this revision, the FAA finds that, with respect to the reduced compliance time, since a situation exists that requires the immediate adoption of this regulation, notice and opportunity for prior public comment hereon are impracticable, and good cause exists for making this amendment effective in less than 30 days.

Comments

Due consideration has been given to the comments received regarding the NPRM.

Support for the Proposal

One commenter supports the proposed AD.

Request to Revise Unsafe Condition

One commenter requests that the FAA expand the details of the identified unsafe condition to more fully describe the failure sequence. Specifically, the commenter requests a revision of the NPRM to specify that fatigue cracking or loose or missing fasteners could result first in failure of the diagonal brace load path, and then possible separation of the nacelle from the wing.

The FAA agrees that the requested language helps to clarify the sequence of possible failures. The unsafe condition in this AD has been revised accordingly.

Request to Defer Inspection for Certain Airplanes

One commenter states that certain airplanes have already accomplished the terminating action required by AD 95–13–05, amendment 39–9285 (60 FR 33333, June 28, 1995). The commenter requests that those airplanes be allowed to defer inspection until 12,000 flight cycles after completing that terminating action. As justification for its request, the commenter explains that, after modification in accordance with AD 95–13–05, the chords are replaced with new chords. Therefore, the commenter requests that inspections start 12,000 flight cycles after accomplishment of the terminating modification in accordance with AD 95–13–05.

The FAA concurs partially. The FAA concurs that accomplishment of the initial inspections required by paragraphs (a) and (b) of this AD may be deferred, for Groups 1 and 2 airplanes, following accomplishment of the terminating action in accordance with AD 95–13–05. This AD has been revised accordingly, as shown in paragraphs (a) and (b). However, as stated previously, the compliance time for these actions has been reduced from 12,000 to 8,000 flight cycles.

Request for Clarification

One commenter requests a revision to the section of the NPRM titled ''Actions Since Issuance of Previous Rule.'' Specifically, the commenter requests that the statement ''* * * analysis shows that this is not the case for many of the different types that can be installed on the outboard strut'' be changed to ''* * * analysis shows sufficient similarities for many * * *'' The FAA agrees that this language more accurately reflects relevant conditions. However, because this section of the preamble to an NPRM is not restated in this AD, no change to this AD is necessary.

Conclusion

After careful review of the available data, including the comments noted above, the FAA has determined that air safety and the public interest require the adoption of the rule with the changes previously described. The FAA has determined that these changes will neither increase the economic burden on any operator nor increase the scope of the AD.

Explanation of Requirements of Rule

Since an unsafe condition has been identified that is likely to exist or develop on other airplanes of this same type design, this AD supersedes AD 96–26–51 to require new repetitive inspections to detect fatigue cracking or loose or missing fasteners of the aft torque bulkheads of the outboard nacelle struts; and repair, if necessary. In addition, this AD expands the applicability of the existing AD to include additional airplanes. The actions are required to be accomplished in accordance with Boeing Alert Service Bulletin 747–54A2184, except as discussed previously and in the NPRM.

Comments Invited

Although this action is in the form of a final rule that involves requirements affecting flight safety and, thus, was not preceded by notice and an opportunity for public comment, comments are invited on this rule. Interested persons are invited to comment on this rule by submitting such written data, views, or arguments as they may desire. Communications shall identify the Rules Docket number and be submitted in triplicate to the address specified under the caption **ADDRESSES**. All communications received on or before the closing date for comments will be considered, and this rule may be amended in light of the comments received. Factual information that supports the commenter's ideas and suggestions is extremely helpful in evaluating the effectiveness of the AD action and determining whether additional rulemaking action would be needed.

Comments are specifically invited on the overall regulatory, economic, environmental, and energy aspects of the rule that might suggest a need to modify the rule. All comments submitted will be available, both before and after the closing date for comments, in the Rules Docket for examination by interested persons. A report that summarizes each FAA-public contact concerned with the substance of this AD will be filed in the Rules Docket.

Commenters wishing the FAA to acknowledge receipt of their comments submitted in response to this rule must submit a self-addressed, stamped postcard on which the following statement is made: ''Comments to Docket Number 98–NM–76–AD.'' The postcard will be date stamped and returned to the commenter.

Regulatory Impact

The regulations adopted herein will not have substantial direct effects on the States, on the relationship between the national government and the States, or on the distribution of power and responsibilities among the various levels of government. Therefore, in accordance with Executive Order 12612, it is determined that this final rule does not have sufficient federalism implications to warrant the preparation of a Federalism Assessment.

The FAA has determined that this regulation is an emergency regulation that must be issued immediately to correct an unsafe condition in aircraft, and that it is not a ''significant regulatory action'' under Executive Order 12866. It has been determined further that this action involves an emergency regulation under DOT Regulatory Policies and Procedures (44 FR 11034, February 26, 1979). If it is determined that this emergency regulation otherwise would be

significant under DOT Regulatory Policies and Procedures, a final regulatory evaluation will be prepared and placed in the Rules Docket. A copy of it, if filed, may be obtained from the Rules Docket at the location provided under the caption **ADDRESSES**.

List of Subjects in 14 CFR Part 39

Air transportation, Aircraft, Aviation safety, Incorporation by reference, Safety.

Adoption of the Amendment

Accordingly, pursuant to the authority delegated to me by the Administrator, the Federal Aviation Administration amends part 39 of the Federal Aviation Regulations (14 CFR part 39) as follows:

PART 39—AIRWORTHINESS DIRECTIVES

1. The authority citation for part 39 continues to read as follows:

Authority: 49 U.S.C. 106(g), 40113, 44701.

§ 39.13 [Amended]

2. Section 39.13 is amended by removing amendment 39–9876 (62 FR 1038, January 8, 1997), and by adding a new airworthiness directive (AD), amendment 39–11054, to read as follows:

99–05–06 Boeing: Amendment 39–11054. Docket 98–NM–76–AD. Supersedes AD 96–26–51, Amendment 39–9876.

Applicability: Model 747 series airplanes, as listed in Boeing Alert Service Bulletin 747–54A2184, dated July 3, 1997; certificated in any category.

Note 1: This AD applies to each airplane identified in the preceding applicability provision, regardless of whether it has been modified, altered, or repaired in the area subject to the requirements of this AD. For airplanes that have been modified, altered, or repaired so that the performance of the requirements of this AD is affected, the owner/operator must request approval for an alternative method of compliance in accordance with paragraph (e) of this AD. The request should include an assessment of the effect of the modification, alteration, or repair on the unsafe condition addressed by this AD; and, if the unsafe condition has not been eliminated, the request should include specific proposed actions to address it.

Compliance: Required as indicated, unless accomplished previously.

To detect and correct fatigue cracking and loose or missing fasteners of the aft torque bulkheads of the outboard nacelle struts, which could result in failure of an outboard nacelle strut diagonal brace load path and possible separation of the nacelle from the wing, accomplish the following:

(a) For airplanes identified as Groups 1 and 2 airplanes in Boeing Alert Service Bulletin 747–54A2184, dated July 3, 1997: Prior to the accumulation of 8,000 total flight cycles, or within 8,000 flight cycles since modification in accordance with AD 95–13–05, amendment 39–9285, or within 30 days after the effective date of this AD, whichever occurs latest, perform a detailed visual inspection of the aft torque bulkheads of the number 1 and number 4 nacelle struts to detect fatigue cracking and loose or missing fasteners. The inspection shall be accomplished in accordance with Part I of the Accomplishment Instructions of Boeing Alert Service Bulletin 747–54A2184, dated July 3, 1997.

Note 2: There is a typographical error on Sheet 3 of Figure 1 of the alert service bulletin. The words ''Group 1 airplanes'' should read ''Groups 1 and 2 airplanes.''

(1) If no cracking, and no loose or missing fastener, is found, repeat the inspection thereafter at the intervals specified in Figure 1 of the alert service bulletin.

(2) If any cracking, or any loose or missing fastener, is found, prior to further flight, repair in accordance with Part III of the alert service bulletin. Repeat the inspection thereafter at the intervals specified in Figure 1 of the alert service bulletin. Where the service bulletin specifies that the manufacturer may be contacted for disposition of certain repair conditions, repair in accordance with a method approved by the Manager, Seattle Aircraft Certification Office (ACO), FAA, Transport Airplane Directorate; or in accordance with data meeting the type certification basis of the airplane approved by a Boeing Company designated engineering representative (DER) who has been authorized by the Manager, Seattle ACO, to make such findings.

(b) For airplanes identified as Groups 1 and 2 airplanes in Boeing Alert Service Bulletin 747–54A2184, dated July 3, 1997: Prior to the accumulation of 8,000 total flight cycles, or within 8,000 flight cycles since modification in accordance with AD 95–13–05, amendment 39–9285, or within 30 days after the effective date of this AD, whichever occurs latest, perform a non-destructive test (NDT) inspection of the aft torque bulkheads of the number 1 and number 4 nacelle struts to detect fatigue cracking. The NDT inspection shall be accomplished in accordance with Part II of the Accomplishment Instructions of Boeing Alert Service Bulletin 747–54A2184, dated July 3, 1997.

Note 3: The alert service bulletin refers to a variety of NDT inspections, consisting of ultrasonic inspections, surface eddy current inspections, and open-hole eddy current inspections. The logic diagram in Figure 1 of the alert service bulletin states the conditions under which each of these inspections is to be performed.

(1) If no cracking is found, repeat the inspection thereafter at the intervals specified in Figure 1 of the alert service bulletin.

(2) If any cracking is found, prior to further flight, repair in accordance with Part III of the alert service bulletin. Repeat the inspection thereafter at the intervals specified in Figure 1 of the alert service bulletin. Where the alert service bulletin specifies that the manufacturer may be contacted for disposition of certain repair conditions, repair in accordance with a method approved by the Manager, Seattle ACO; or in accordance with data meeting the type certification basis of the airplane approved by a Boeing Company DER who has been authorized by the Manager, Seattle ACO, to make such findings.

(c) For airplanes identified as Groups 3 and 4 airplanes in Boeing Alert Service Bulletin 747–54A2184, dated July 3, 1997: Prior to the accumulation of 12,000 total flight cycles, or within 90 days after the effective date of this AD, whichever occurs later, perform a detailed visual inspection of the aft torque bulkheads of the number 1 and number 4 nacelle struts to detect fatigue cracking and loose or missing fasteners. The inspection shall be accomplished in accordance with Part I of the Accomplishment Instructions of Boeing Alert Service Bulletin 747–54A2184, dated July 3, 1997.

(1) If no cracking, and if no loose or missing fastener is found, repeat the inspection thereafter at the intervals specified in Figure 1 of the alert service bulletin, until the applicable requirements of paragraph (d) are accomplished.

(2) If any cracking, or if any loose or missing fastener is found, prior to further flight, repair in accordance with Part III of the alert service bulletin. Where the alert service bulletin specifies that the manufacturer may be contacted for disposition of certain repair conditions, repair in accordance with a method approved by the Manager, Seattle ACO; or in accordance with data meeting the type certification basis of the airplane approved by a Boeing Company DER who has been authorized by the Manager, Seattle ACO, to make such findings.

(d) For airplanes identified as Groups 3 and 4 airplanes in Boeing Alert Service Bulletin 747–54A2184, dated July 3, 1997: Accomplishment of the nacelle strut modifications required in AD 95–13–07, amendment 39–9287 (applicable to airplanes equipped with either General Electric CF6–45/50 or Pratt & Whitney JT9D–70 nacelle struts), constitutes terminating action for the requirements of this AD.

(e) An alternative method of compliance or adjustment of the compliance time that provides an acceptable level of safety may be used if approved by the Manager, Seattle ACO. Operators shall submit their requests through an appropriate FAA Principal Maintenance Inspector, who may add comments and then send it to the Manager, Seattle ACO.

Note 4: Information concerning the existence of approved alternative methods of compliance with this AD, if any, may be obtained from the Seattle ACO.

(f) Special flight permits may be issued in accordance with sections 21.197 and 21.199 of the Federal Aviation Regulations (14 CFR 21.197 and 21.199) to operate the airplane to a location where the requirements of this AD can be accomplished.

(g) Except as provided in paragraphs (a)(2), (b)(2), and (c)(2) of this AD, the actions shall be done in accordance with Boeing Alert Service Bulletin 747–54A2184, dated July 3, 1997. This incorporation by reference was

approved by the Director of the **Federal Register** in accordance with 5 U.S.C. 552(a) and 1 CFR part 51. Copies may be obtained from Boeing Commercial Airplane Group, P.O. Box 3707, Seattle, Washington 98124–2207. Copies may be inspected at the FAA, Transport Airplane Directorate, 1601 Lind Avenue, SW., Renton, Washington; or at the Office of the **Federal Register**, 800 North Capitol Street, NW., suite 700, Washington, DC.

(h) This amendment becomes effective on March 18, 1999.

Issued in Renton, Washington, on February 22, 1999.

Darrell M. Pederson,

Acting Manager, Transport Airplane Directorate, Aircraft Certification Service.

[FR Doc. 99–4892 Filed 3–2–99; 8:45 am]

BILLING CODE 4910–13–U

DEPARTMENT OF TRANSPORTATION

Federal Aviation Administration

14 CFR Part 39

[Docket No. 94–SW–23–AD; Amendment 39–11055; AD 99–05–07]

RIN 2120–AA64

Airworthiness Directives; Bell Helicopter Textron, Inc. Model 214B and 214B–1 Helicopters

AGENCY: Federal Aviation Administration, DOT.

ACTION: Final rule.

SUMMARY: This amendment adopts a new airworthiness directive (AD), applicable to Bell Helicopter Textron, Inc. (BHTI) Model 214B and 214B–1 helicopters, that requires creation of a component history card or an equivalent record using the Retirement Index Number (RIN) system, establishing a system for tracking increases to the accumulated RIN, and establishing a maximum accumulated RIN for the pillow block bearing bolts (bearing bolts) of 17,000 before they must be removed from service. This amendment is prompted by fatigue analyses and tests that show certain bearing bolts fail sooner than originally anticipated because of the unanticipated high number of lifts and takeoffs (torque events) performed with those bearing bolts in addition to the time-in-service (TIS) accrued under other operating conditions. The actions specified by this AD are intended to prevent fatigue failure of the bearing bolts, which could result in failure of the main rotor system and subsequent loss of control of the helicopter.

EFFECTIVE DATE: May 3, 1999.

FOR FURTHER INFORMATION CONTACT: Harry Edmiston, Aerospace Engineer, FAA, Rotorcraft Directorate, Rotorcraft Certification Office, Fort Worth, Texas 76193–0170, telephone (817) 222–5158, fax (817) 222–5961.

SUPPLEMENTARY INFORMATION: A proposal to amend part 39 of the Federal Aviation Regulations (14 CFR part 39) to include an AD that is applicable to BHTI Model 214B and 214B–1 helicopters was published in the **Federal Register** on July 6, 1998 (63 FR 36377). That action proposed to require creation of a component history card or an equivalent record using the RIN system, establishing a system for tracking increases to the accumulated RIN, and establishing a maximum accumulated RIN for the bearing bolts of 17,000 before they must be removed from service.

Interested persons have been afforded an opportunity to participate in the making of this amendment. No comments were received on the proposal or the FAA's determination of the cost to the public. The FAA has determined that air safety and the public interest require the adoption of the rule as proposed.

The FAA estimates that 54 helicopters of U.S. registry will be affected by this AD, that it will take, per helicopter, approximately (1) 24 work hours to replace the affected bearing bolts due to the new method of determining the retirement life; (2) 2 work hours to create the component history card or equivalent record (record); and (3) 10 work hours to maintain the record each year; and that the average labor rate is $60 per work hour. Required parts will cost approximately $2,000 per helicopter. Based on these figures, the total cost impact of the AD on U.S. operators is estimated to be $224,640 for the first year and $128,520 for each subsequent year. These costs assume replacement of the bearing bolts in the fleet the first year, and creation and maintenance of the records for all the fleet; and replacement of one-half of the fleet's bolts, creation of the records for one-half of the fleet, and maintenance of the records for all the fleet each subsequent year.

The regulations adopted herein will not have substantial direct effects on the States, on the relationship between the national government and the States, or on the distribution of power and responsibilities among the various levels of government. Therefore, in accordance with Executive Order 12612, it is determined that this final rule does not have sufficient federalism implications to warrant the preparation of a Federalism Assessment.

For the reasons discussed above, I certify that this action (1) is not a ''significant regulatory action'' under Executive Order 12866; (2) is not a ''significant rule'' under DOT Regulatory Policies and Procedures (44 FR 11034, February 26, 1979); and (3) will not have a significant economic impact, positive or negative, on a substantial number of small entities under the criteria of the Regulatory Flexibility Act. A final evaluation has been prepared for this action and it is contained in the Rules Docket. A copy of it may be obtained from the Rules Docket at the Federal Aviation Administration (FAA), Office of the Regional Counsel, Southwest Region, Attention: Rules Docket No. 94–SW–23–AD, 2601 Meacham Blvd., Room 663, Fort Worth, Texas 76137.

List of Subjects in 14 CFR Part 39

Air transportation, Aircraft, Aviation safety, Safety.

Adoption of the Amendment

Accordingly, pursuant to the authority delegated to me by the Administrator, the Federal Aviation Administration amends part 39 of the Federal Aviation Regulations (14 CFR part 39) as follows:

PART 39—AIRWORTHINESS DIRECTIVES

1. The authority citation for part 39 continues to read as follows:

Authority: 49 U.S.C. 106(g), 40113, 44701.

§ 39.13 [Amended]

2. Section 39.13 is amended by adding a new airworthiness directive to read as follows:

AD 99–05–07 Bell Helicopter Textron, Inc.: Amendment 39–11055. Docket No. 94–SW–23–AD.

Applicability: Model 214B and 214B–1 helicopters, certificated in any category.

Note 1: This AD applies to each helicopter identified in the preceding applicability provision, regardless of whether it has been modified, altered, or repaired in the area subject to the requirements of this AD. For helicopters that have been modified, altered, or repaired so that the performance of the requirements of this AD is affected, the owner/operator must use the authority provided in paragraph (e) to request approval from the FAA. This approval may address either no action, if the current configuration eliminates the unsafe condition, or different actions necessary to address the unsafe condition described in this AD. Such a request should include an assessment of the effect of the changed configuration on the unsafe condition addressed by this AD. In no case does the presence of any modification, alteration, or repair remove any helicopter from the applicability of this AD.

Compliance: Required within 25 hours time-in-service (TIS), unless accomplished previously.

To prevent fatigue failure of the pillow block bearing bolts (bearing bolts), part number (P/N) 20–057–12–48D or –50D, which could result in failure of the main rotor system and subsequent loss of control of the helicopter, accomplish the following:

(a) Create a Retirement Index Number (RIN) component history card or an equivalent record for the bearing bolts, P/N 20–057–12–48D or –50D.

(b) Calculate and record on the component history card the historical accumulated RIN for the bearing bolts as follows:

(1) When the type of operation (internal or external load lift), actual flight hours, and number of external load lifts or takeoffs per hour are known, multiply the actual flight hours by the appropriate factor in the following table for external load lift operation:

Average number of external load lift events per flight hour	Factor
0–2.00	6.8
2.01–5.00	13.6
5.01–16.00	27.2
16.01—27.00	40.8
Above 27.00	54.4

When the type of operation is internal load and no external lifting is involved, each hour of actual operating time is equal to 6.8 RIN.

(2) When the actual flight hours on the bolts are known, but the type of operation (internal or external load lift) is unknown, multiply the actual flight hours by a factor of 40.8.

(3) When the actual flight hours on the bolts are unknown, assume 75 flight hours per month.

(4) When the flight hours on the bolts are assumed, but the type of operation (internal or external load lift) is known,

(i) Multiply the number of flight hours assumed for internal load operations by a factor of 6.8.

(ii) Multiply the number of flight hours assumed for external load operations by a factor of 40.8.

(5) When the flight hours on the bolts are assumed and the type of operation (internal or external load lift) is unknown, multiply the assumed flight hours by a factor of 40.8.

(c) After compliance with paragraphs (a) and (b) of this AD, during each operation thereafter, maintain a count of each lift or takeoff performed and at the end of each day's operations, increase the accumulated RIN on the bearing bolts component history card as follows:

(1) Increase the RIN by 1 for each takeoff.

(2) Increase the RIN by 1 for each external load lift, or increase the RIN by 2 for each external load operation in which the load is picked up at a higher elevation and released at a lower elevation and the difference in elevation between the pickup point and the release point is 200 feet or greater.

Note 2: Bell Helicopter Textron, Inc. Alert Service Bulletin No. 214–94–54, dated November 7, 1994, pertains to the subject of this AD.

(d) Remove the bearing bolts from service on or before attaining an accumulated RIN of 17,000. The bearing bolts are no longer retired based upon flight hours. If any of the four bolts require replacement for any reason, then all four bolts must be replaced at that time. This AD revises the Airworthiness Limitations section of the maintenance manual by establishing a new retirement life for the bearing bolts of 17,000 RIN.

(e) An alternative method of compliance or adjustment of the compliance time that provides an acceptable level of safety may be used if approved by the Manager, Rotorcraft Certification Office, Rotorcraft Directorate, FAA. Operators shall submit their requests through an FAA Principal Maintenance Inspector, who may concur or comment and then send it to the Manager, Rotorcraft Certification Office.

Note 3: Information concerning the existence of approved alternative methods of compliance with this AD, if any, may be obtained from the Rotorcraft Certification Office.

(f) Special flight permits may be issued in accordance with sections 21.197 and 21.199 of the Federal Aviation Regulations (14 CFR 21.197 and 21.199) to operate the helicopter to a location where the requirements of this AD can be accomplished.

(g) This amendment becomes effective on May 3, 1999.

Issued in Fort Worth, Texas, on February 19, 1999.

Henry A. Armstrong,

Manager, Rotorcraft Directorate, Aircraft Certification Service.

[FR Doc. 99–5039 Filed 3–2–99; 8:45 am]

BILLING CODE 4910–13–U

DEPARTMENT OF TRANSPORTATION

Federal Aviation Administration

14 CFR Part 39

[Docket No. 98–SW–34–AD; Amendment 39–11056; AD 99–05–08]

RIN 2120–AA64

Airworthiness Directives; McDonnell Douglas Helicopter Systems Model MD–900 Helicopters

AGENCY: Federal Aviation Administration, DOT.

ACTION: Final rule; request for comments.

SUMMARY: This amendment adopts a new airworthiness directive (AD) that is applicable to McDonnell Douglas Helicopter Systems (MDHS) Model MD–900 helicopters. This action requires establishing or reducing certain life limits, applying serial numbers (S/N's), determining hours time-in-service (TIS), and creating component history cards or equivalent records for various parts. This amendment is prompted by analysis that indicates a need for establishing or reducing life limits to avoid fatigue failure of certain parts. The actions specified by this AD are intended to apply appropriate life limits to various parts.

DATES: Effective March 18, 1999.

The incorporation by reference of certain publications listed in the regulations is approved by the Director of the Federal Register as of March 18, 1999.

Comments for inclusion in the Rules Docket must be received on or before May 3, 1999.

ADDRESSES: Submit comments in triplicate to the Federal Aviation Administration (FAA), Office of the Regional Counsel, Southwest Region, Attention: Rules Docket No. 98–SW–34–AD, 2601 Meacham Blvd., Room 663, Fort Worth, Texas 76137.

The service information referenced in this AD may be obtained from McDonnell Douglas Helicopter Systems, Technical Publications, Bldg. 530/B11, 5000 E. McDowell Road, Mesa, Arizona 85205–9797, telephone 1–800–388–3378, fax 602–891–6782. This information may be examined at the FAA, Office of the Regional Counsel, Southwest Region, 2601 Meacham Blvd., Room 663, Fort Worth, Texas; or at the Office of the Federal Register, 800 North Capitol Street, NW., suite 700, Washington, DC.

FOR FURTHER INFORMATION CONTACT: Greg DiLibero, Aerospace Engineer, Aircraft Certification Office, Airframe Branch, FAA, 3960 Paramount Blvd., Lakewood, CA 90712, telephone 562–627–5231, fax number 562–627–5210.

SUPPLEMENTARY INFORMATION: This amendment adopts a new AD that is applicable to MDHS Model MD–900 helicopters. Analysis indicates a need for establishing life limits, applying S/N's, determining hours time-in-service (TIS), and creating component history cards or equivalent records for various parts. This AD requires (1) establishing a life limit for the main rotor drive shafts, P/N's 900D2436528–101, 900D6400004–101, 900DF436026–101, and 900DF400100–101 to 1,450 hours TIS; reducing the life limit for the NOTAR pitch plate assembly, P/N 900R2443000–105, from 10,000 to 3,527 hours TIS; and establishing a life limit for the spherical/slider main rotor bearings, P/N 900C3010042–105, of 12,807 hours TIS; (2) determining the hours TIS and creating a component history card or equivalent record for the NOTAR tension-torsion fan blade strap assembly, P/N 500N5311–5 or 900R3442009–101, and NOTAR pitch plate assembly, P/N 900R2443000–105; and (3) applying appropriate S/N's to the NOTAR pitch plate assembly, P/N 900R2443000–105, on each helicopter S/N's 900–00002 through 900–00057.

This amendment is prompted by the FAA's determination, after reviewing the manufacturer's analysis, that a reduction in life limits is necessary. The actions specified in this AD are intended to establish appropriate life limits for certain parts.

The FAA has reviewed MDHS Service Bulletin (SB) 900–058R1, dated July 6, 1998, which provides procedures for applying life limits and S/N's to certain parts.

Since an unsafe condition has been identified that is likely to exist or develop on other MDHS Model MD–900 helicopters of the same type design, this AD requires reducing or establishing life limits, adding S/N's, determining hours TIS, and creating component history cards or equivalent records for various parts. The actions are required to be accomplished in accordance with the SB previously described. The short compliance time is required because the previously described critical unsafe condition can adversely affect the controllability and structural integrity of the helicopter. Therefore, establishing appropriate life limits for various parts is required because several helicopters are approaching life limits, and this AD must be issued immediately.

Since a situation exists that requires the immediate adoption of this regulation, it is found that notice and opportunity for prior public comment hereon are impracticable, and that good cause exists for making this amendment effective in less than 30 days.

The FAA estimates that 27 helicopters will be affected by this proposed AD, that it will take approximately 2.5 work hours to add S/N's to the parts and create component history cards or equivalent records, and that the average labor rate is $60 per work hour. Based on these figures, the total cost impact of the AD on U.S. operators is estimated to be $4,050 assuming no parts will be replaced as a result of this AD.

Comments Invited

Although this action is in the form of a final rule that involves requirements affecting flight safety and, thus, was not preceded by notice and an opportunity for public comment, comments are invited on this rule. Interested persons are invited to comment on this rule by submitting such written data, views, or arguments as they may desire. Communications should identify the Rules Docket number and be submitted in triplicate to the address specified under the caption **ADDRESSES**. All communications received on or before the closing date for comments will be considered, and this rule may be amended in light of the comments received. Factual information that supports the commenter's ideas and suggestions is extremely helpful in evaluating the effectiveness of the AD action and determining whether additional rulemaking action would be needed.

Comments are specifically invited on the overall regulatory, economic, environmental, and energy aspects of the rule that might suggest a need to modify the rule. All comments submitted will be available, both before and after the closing date for comments, in the Rules Docket for examination by interested persons. A report that summarizes each FAA-public contact concerned with the substance of this AD will be filed in the Rules Docket.

Commenters wishing the FAA to acknowledge receipt of their comments submitted in response to this rule must submit a self-addressed, stamped postcard on which the following statement is made: ''Comments to Docket No. 98–SW–34–AD.'' The postcard will be date stamped and returned to the commenter.

The regulations adopted herein will not have substantial direct effects on the States, on the relationship between the national government and the States, or on the distribution of power and responsibilities among the various levels of government. Therefore, in accordance with Executive Order 12612, it is determined that this final rule does not have sufficient federalism implications to warrant the preparation of a Federalism Assessment.

The FAA has determined that this regulation is an emergency regulation that must be issued immediately to correct an unsafe condition in aircraft, and that it is not a ''significant regulatory action'' under Executive Order 12866. It has been determined further that this action involves an emergency regulation under DOT Regulatory Policies and Procedures (44 FR 11034, February 26, 1979). If it is determined that this emergency regulation otherwise would be significant under DOT Regulatory Policies and Procedures, a final regulatory evaluation will be prepared and placed in the Rules Docket. A copy of it, if filed, may be obtained from the Rules Docket at the location provided under the caption **ADDRESSES**.

List of Subjects in 14 CFR Part 39

Air transportation, Aircraft, Aviation safety, Incorporation by reference, Safety.

Adoption of the Amendment

Accordingly, pursuant to the authority delegated to me by the Administrator, the Federal Aviation Administration amends part 39 of the Federal Aviation Regulations (14 CFR part 39) as follows:

PART 39—AIRWORTHINESS DIRECTIVES

1. The authority citation for part 39 continues to read as follows:

Authority: 49 U.S.C. 106(g), 40113, 44701.

§ 39.13 [Amended]

2. Section 39.13 is amended by adding a new airworthiness directive (AD) to read as follows:

AD 99–05–08 McDonnell Douglas Helicopter Systems: Amendment 39–11056. Docket No. 98–SW–34–AD.

Applicability: McDonnell Douglas Helicopter Systems (MDHS) MD–900 helicopters, certificated in any category.

Note 1: This AD applies to each helicopter identified in the preceding applicability provision, regardless of whether it has been modified, altered, or repaired in the area subject to the requirements of this AD. For helicopters that have been modified, altered, or repaired so that the performance of the requirements of this AD is affected, the owner/operator must use the authority provided in paragraph (d) to request approval from the FAA. This approval may address either no action, if the current configuration eliminates the unsafe condition, or different actions necessary to address the unsafe condition described in this AD. Such a request should include an assessment of the effect of the changed configuration on the unsafe condition addressed by this AD. In no case does the presence of any modification, alteration, or repair remove any helicopter from the applicability of this AD.

Compliance: Required as indicated, unless accomplished previously.

To establish life limits and place a serial number (S/N) on various critical parts, accomplish the following:

(a) Remove from service:

(1) Main rotor drive shaft, part number (P/N) 900D2436528–101, 900D6400004–101, 900DF436026–101, or 900DF400100–101, on or before attaining 1,450 hours time-in-service (TIS).

(2) NOTAR pitch plate assembly, P/N 900R2443000–105, on or before attaining 3,527 hours TIS.

(3) Spherical/slider main rotor bearing, P/N 900C3010042–105, on or before attaining 12,807 hours TIS.

(b) On or before attaining 600 hours TIS after the effective date of this AD or by June 30, 1999, whichever occurs first,

(1) Apply the specified S/N to the pitch plate assembly, P/N 900R2443000–105, on each Model MD–900 helicopter with S/N's 900–00002 through 900–00057, as specified in MDHS Service Bulletin SB 900–058R1, dated July 6, 1998.

(2) Determine the hours TIS and create a component history card or equivalent record for the NOTAR tension-torsion fan blade strap assembly, P/N 500N5311–5 or 900R3442009–101, and NOTAR pitch plate assembly, P/N 900R2443000–105.

(c) This AD revises the Airworthiness Limitations Section of the MD–900 Maintenance Manual by establishing new retirement lives and adding parts to the life-limited parts list.

Note 2: The Airworthiness Limitations Section of the MD–900 Rotorcraft Maintenance Manual, Reissue 1, Revision 2, dated July 24, 1998, pertains to the subject of this AD.

(d) An alternative method of compliance or adjustment of the compliance time that provides an acceptable level of safety may be used if approved by the Manager, Los Angeles Aircraft Certification Office, FAA. Operators shall submit their requests through an FAA Principal Maintenance Inspector, who may concur or comment and then send it to the Manager, Los Angeles Aircraft Certification Office.

Note 3: Information concerning the existence of approved alternative methods of compliance with this AD, if any, may be obtained from the Rotorcraft Standards Staff.

(e) Special flight permits may be issued in accordance with sections 21.197 and 21.199 of the Federal Aviation Regulations (14 CFR 21.197 and 21.199) to operate the helicopter to a location where the requirements of this AD can be accomplished.

(f) The corrective action in paragraph (b)(1) shall be accomplished in accordance with McDonnell Douglas Helicopter Systems Service Bulletin SB 900–058R1, dated July 6, 1998. This incorporation by reference was approved by the Director of the Federal Register in accordance with 5 U.S.C. 552(a) and 1 CFR part 51. Copies may be obtained from McDonnell Douglas Helicopter Systems, Technical Publications, Bldg. 530/B11, 5000 E. McDowell Road, Mesa, Arizona 85205–9797, telephone 1–800–388–3378, fax 602–891–6782. Copies may be inspected at the FAA, Office of the Regional Counsel, Southwest Region, 2601 Meacham Blvd., Room 663, Fort Worth, Texas; or at the Office of the Federal Register, 800 North Capitol Street, NW., suite 700, Washington, DC.

(g) This amendment becomes effective on March 18, 1999.

Issued in Fort Worth, Texas, on February 19, 1999.

Henry A. Armstrong,

Manager, Rotorcraft Directorate, Aircraft Certification Service.

[FR Doc. 99–5038 Filed 3–2–99; 8:45 am]

BILLING CODE 4910–13–U

DEPARTMENT OF TRANSPORTATION

Federal Aviation Administration

14 CFR Part 39

[Docket No. 98–CE–110–AD; Amendment 39–11057; AD 99–05–09]

RIN 2120–AA64

Airworthiness Directives; The New Piper Aircraft, Inc. PA–23, PA–24, PA–28, PA–32, and PA–34 Series Airplanes

AGENCY: Federal Aviation Administration, DOT.

ACTION: Final rule; request for comments.

SUMMARY: This amendment adopts a new airworthiness directive (AD) that applies to certain The New Piper Aircraft, Inc. (Piper) PA–23, PA–24, PA–28, PA–32, and PA–34 series airplanes that incorporate certain Facet (manufactured by the Purolator Products Company) induction air filters. This AD requires replacing these induction air filters. This AD results from reports of cracking, splitting, crumbling, and deterioration (referred to as damage hereon) of Facet/Purolator induction air filters manufactured between a certain time period. The actions specified by this AD are intended to prevent pieces of a damaged induction air filter from being ingested into the engine, which could result in reduced or loss of engine power.

DATES: Effective March 19, 1999.

Comments for inclusion in the Rules Docket must be received on or before April 28, 1999.

ADDRESSES: Submit comments in triplicate to the Federal Aviation Administration (FAA), Central Region, Office of the Regional Counsel, Attention: Rules Docket No. 98–CE–110–AD, Room 1558, 601 E. 12th Street, Kansas City, Missouri 64106.

Service information that applies to this AD may be obtained from The New Piper Aircraft, Inc., Customer Services, 2926 Piper Drive, Vero Beach, Florida 32960. This information may also be examined at the Federal Aviation Administration (FAA), Central Region, Office of the Regional Counsel, Attention: Rules Docket No. 98–CE–110–AD, Room 1558, 601 E. 12th Street, Kansas City, Missouri 64106.

FOR FURTHER INFORMATION CONTACT: Ms. Juanita Craft, Aerospace Engineer, FAA, Atlanta Aircraft Certification Office, One Crown Center, 1895 Phoenix Boulevard, Suite 450, Atlanta, Georgia 30349; telephone: (770) 703–6089; facsimile: (770) 703–6097; e-mail address: ''Juanita.Craft@faa.gov''.

SUPPLEMENTARY INFORMATION:

Discussion

The FAA has received reports of deterioration, cracking, splitting, and crumbling (referred hereon as damage) of certain Purolator/Facet induction air filters, Purolator part number (P/N) 638873, Model No. CA161PL, Piper P/N 460–632 (PS60007–2), that are installed on certain Piper PA–23, PA–24, PA–28, PA–32, and PA–34 series airplanes. Purolator utilized an incorrect curing time in the manufacturing process of the plastisol used in the induction air filters from January 1997 through September 1998. This incorrect curing time makes the induction air filters susceptible to the damage described above.

This condition, if not corrected in a timely manner, could result in engine ingestion of pieces of a damaged induction air filter with possible reduced or loss of engine power.

Relevant Service Information

Piper has issued Service Bulletin No. 1022, dated September 22, 1998, which specifies procedures for inspecting to determine if one of the defective induction air filters is installed. This service bulletin also includes (referenced as ATTACHMENT ''A'') Purolator Service Bulletin No.: SB090298.01, dated September 16, 1998, which specifies removing, inspecting, and replacing any defective induction air filter.

The FAA's Determination

After examining the circumstances and reviewing all available information related to the incidents described above, including the relevant service information, the FAA has determined that AD action should be taken to prevent pieces of a damaged induction air filter from being ingested into the engine, which could result in reduced or loss of engine power.

Explanation of the Provisions of the AD

Since an unsafe condition has been identified that is likely to exist or develop in other Piper PA–23, PA–24, PA–28, PA–32, and PA–34 series airplanes of the same type design, the FAA is issuing an AD. The FAA requires replacing any Purolator/Facet induction air filter, Purolator P/N 638873, Model No. CA161PL, Piper P/N 460–632 (PS60007–2), that:

—Was manufactured anytime from January 1997 through September 1998; and

—Is identified with a .250 (1/4)-inch high (white) ink stamp ''FACET–

638873'', and may include ''FAA–PMA''.

Accomplishment of the replacement is required in accordance with the applicable maintenance manual, as specified in Piper Service Bulletin No. 1022, dated September 22, 1998, and Purolator Service Bulletin No.: SB090298.01, dated September 16, 1998.

Determination of the Effective Date of the AD

Since a situation exists (possible reduced or loss of engine power) that requires the immediate adoption of this regulation, it is found that notice and opportunity for public prior comment hereon are impracticable, and that good cause exists for making this amendment effective in less than 30 days.

Comments Invited

Although this action is in the form of a final rule that involves requirements affecting immediate flight safety and, thus, was not preceded by notice and opportunity to comment, comments are invited on this rule. Interested persons are invited to comment on this rule by submitting such written data, views, or arguments as they may desire. Communications should identify the Rules Docket number and be submitted in triplicate to the address specified above. All communications received on or before the closing date for comments will be considered, and this rule may be amended in light of the comments received. Factual information that supports the commenter's ideas and suggestions is extremely helpful in evaluating the effectiveness of the AD action and determining whether additional rulemaking action would be needed.

Comments are specifically invited on the overall regulatory, economic, environmental, and energy aspects of the rule that might suggest a need to modify the rule. All comments submitted will be available, both before and after the closing date for comments, in the Rules Docket for examination by interested persons. A report that summarizes each FAA-public contact concerned with the substance of this AD will be filed in the Rules Docket.

Commenters wishing the FAA to acknowledge receipt of their comments submitted in response to this rule must submit a self-addressed, stamped postcard on which the following statement is made: ''Comments to Docket No. 98–CE–110–AD.'' The postcard will be date stamped and returned to the commenter.

Regulatory Impact

The regulations adopted herein will not have substantial direct effects on the States, on the relationship between the national government and the States, or on the distribution of power and responsibilities among the various levels of government. Therefore, in accordance with Executive Order 12612, it is determined that this final rule does not have sufficient federalism implications to warrant the preparation of a Federalism Assessment.

The FAA has determined that this regulation is an emergency regulation that must be issued immediately to correct an unsafe condition in aircraft, and is not a significant regulatory action under Executive Order 12866. It has been determined further that this action involves an emergency regulation under DOT Regulatory Policies and Procedures (44 FR 11034, February 26, 1979). If it is determined that this emergency regulation otherwise would be significant under DOT Regulatory Policies and Procedures, a final regulatory evaluation will be prepared and placed in the Rules Docket (otherwise, an evaluation is not required). A copy of it, if filed, may be obtained from the Rules Docket.

List of Subjects in 14 CFR Part 39

Air transportation, Aircraft, Aviation safety, Safety.

Adoption of the Amendment

Accordingly, pursuant to the authority delegated to me by the Administrator, the Federal Aviation Administration amends part 39 of the Federal Aviation Regulations (14 CFR part 39) as follows:

PART 39—AIRWORTHINESS DIRECTIVES

1. The authority citation for part 39 continues to read as follows:

Authority: 49 U.S.C. 106(g), 40113, 44701.

§ 39.13 [Amended]

2. Section 39.13 is amended by adding a new airworthiness directive (AD) to read as follows:

99–05–09 The New Piper Aircraft, Inc.: Amendment 39–11057; Docket No. 98–CE–110–AD.

Applicability: The following airplane model and serial numbers, certificated in any category, that are equipped with Purolator air filter part number (P/N) 638873, Model CA161PL, or Piper P/N 460–632 (PS60007–2):

Models	Serial numbers
PA–23–235	27–505 through 27–622.
PA–23–250	27–01 through 27–2504.
PA–24–180 and PA–24–250	24–103 through 24–3687.
PA–24–260	24–3642, and 24–4000 through 24–5028.
PA–28–140	28–20000 through 28–7725290.
PA–28–150, PA–28–160, and PA–28–180	28–1 through 28–7505259, and 28–E13.
PA–28–181	28–7690001 through 28–8690062, and 2890001 through 2890205.
PA–28–181	2890206 through 2890231, and 2843001 through 2843167.
PA–28–235	28–10001 through 28–7710089, and 28–E11.
PA–28–201T	28–7921001 through 28–7921095.
PA–28R–201T	28R–7703001 through 28R–7803374.
PA–28R–201T	2803001 through 2803012.
PA–28RT–201T	28R–7931001 through 28R–8631005, and 2831001 through 2831038.
PA–32–260	32–1 through 32–7800008.
PA–32–300	32–7640001 through 32–7940290.
PA–32–301	32–8006001 through 32–8606023, and 3206001 through 3206088.
PA–32R–300	32R–7680001 through 32R–7880068.
PA–32RT–300	32R–7885001 through 32R–7985105.
PA–32R–301	32R–8013001 through 32R–8613006, and 3213001 through 3213041
PA–32R–301	3213029, 3213042 through 3213103, and 3246001 through 3246117.
PA–34–200T	34–7570001 through 34–8170092.
PA–34–220T	34–8133001 through 34–8633031, and 3433001 through 3433225.
PA–34–220T	3448001 through 3448035.
PA–34–220T	3448038 through 3448079, and 3447001 through 3447029.

Models	Serial numbers
PA–34–220T	3449002 through 3449078.

Note 1: This AD applies to each airplane identified in the preceding applicability provision, regardless of whether it has been modified, altered, or repaired in the area subject to the requirements of this AD. For airplanes that have been modified, altered, or repaired so that the performance of the requirements of this AD is affected, the owner/operator must request approval for an alternative method of compliance in accordance with paragraph (e) of this AD. The request should include an assessment of the effect of the modification, alteration, or repair on the unsafe condition addressed by this AD; and, if the unsafe condition has not been eliminated, the request should include specific proposed actions to address it.

Compliance: Required as indicated in the body of this AD, unless already accomplished.

To prevent pieces of a damaged induction air filter from being ingested into the engine, which could result in reduced or loss of engine power, accomplish the following:

(a) Within the next 25 hours time-in-service (TIS) after the effective date of this AD, replace, with an FAA-approved induction air filter, any Purolator/Facet induction air filter, Purolator part number (P/N) 638873, Model No. CA161PL, Piper P/N 460–632 (PS60007–2), that incorporates the criteria presented in both paragraphs (a)(1) and (a)(2) of this AD. Accomplish this replacement in accordance with the applicable maintenance manual.

(1) Was manufactured anytime from January 1997 through September 1998; and

(2) Is identified with a .250 (1/4)-inch high (white) ink stamp ''FACET–638873'', and may include ''FAA–PMA''.

Note 2: This AD allows the aircraft owner or pilot to check the maintenance records to determine whether any Purolator/Facet induction air filter, Purolator P/N 638873, Model No. CA161PL, Piper P/N 460–632 (PS60007–2), has been installed between January 1997 and March 19, 1999 (the effective date of this AD). See paragraph (c) of this AD for authorization.

Note 3: Piper Service Bulletin No. 1022, dated September 22, 1998, and Purolator Service Bulletin No.: SB090298.01, dated September 16, 1998, provide information relating to the subject of this AD, including procedures on how to identify the affected induction air filters.

(b) As of the effective date of this AD, no person shall install, on any affected airplane, any Purolator/Facet induction air filter, Purolator P/N 638873, Model No. CA161PL, Piper P/N 460–632 (PS60007–2), that incorporates the criteria presented in both paragraphs (a)(1) and (a)(2) of this AD.

(c) The owner/operator holding at least a private pilot's certificate as authorized by section 43.7 of the Federal Aviation Regulations (14 CFR 43.7) may check the maintenance records to determine whether any Purolator/Facet induction air filter, Purolator P/N 638873, Model No. CA161PL, Piper P/N 460–632 (PS60007–2), has been installed between January 1997 and March 19, 1999 (the effective date of this AD). If one of these induction air filters is not installed, the AD does not apply and the owner/operator must make an entry into the aircraft records showing compliance with this AD in accordance with section 43.9 of the Federal Aviation Regulations (14 CFR 43.9).

(d) Special flight permits may be issued in accordance with sections 21.197 and 21.199 of the Federal Aviation Regulations (14 CFR 21.197 and 21.199) to operate the airplane to a location where the requirements of this AD can be accomplished.

(e) An alternative method of compliance or adjustment of the compliance time that provides an equivalent level of safety may be approved by the Manager, Atlanta Aircraft Certification Office (ACO), One Crown Center, 1895 Phoenix Boulevard, Suite 450, Atlanta, Georgia 30349. The request shall be forwarded through an appropriate FAA Maintenance Inspector, who may add comments and then send it to the Manager, Atlanta ACO.

Note 4: Information concerning the existence of approved alternative methods of compliance with this AD, if any, may be obtained from the Atlanta ACO.

(f) The service information that relates to the subject presented in this AD may be obtained from The New Piper Aircraft, Inc., 2926 Piper Drive, Vero Beach, Florida 32960. This information may be inspected at the FAA, Central Region, Office of the Regional Counsel, Room 1558, 601 E. 12th Street, Kansas City, Missouri.

(g) This amendment becomes effective on March 19, 1999.

Issued in Kansas City, Missouri, on February 22, 1999.

Marvin R. Nuss,

Acting Manager, Small Airplane Directorate, Aircraft Certification Service.

[FR Doc. 99–5037 Filed 3–2–99; 8:45 am]

BILLING CODE 4910–13–U

DEPARTMENT OF TRANSPORTATION

Federal Aviation Administration

14 CFR Part 39

[Docket No. 98–NM–375–AD; Amendment 39–11060; AD 99–05–12]

RIN 2120–AA64

Airworthiness Directives; Boeing Model 737–100, –200, –300, –400, and –500 Series Airplanes

AGENCY: Federal Aviation Administration, DOT.

ACTION: Final rule; request for comments.

SUMMARY: This amendment adopts a new airworthiness directive (AD) that is applicable to certain Boeing Model 737–100, –200, –300, –400, and –500 series airplanes. This action requires removal of the float switch and wiring and inspection of the float switch wiring in the center fuel tank to detect discrepancies, and either reinstallation of existing float switch and wiring, or replacement of the float switch and wiring with a new float switch and wiring. This action also requires installation of Teflon sleeving over the wiring of the float switch. In lieu of the above mentioned requirements, this AD requires deactivation of the float switch, accomplishment of specific fueling procedures, and installation of Caution signs. This amendment is prompted by a report indicating that chafing of the direct current (DC) powered float switch wiring insulation in the center fuel tank has occurred on several airplanes. The actions specified in this AD are intended to detect and correct such chafing and the resultant arcing from the wiring to the in-tank conduit, which could present an ignition source inside the fuel tank and consequent fire/explosion.

DATES: Effective March 18, 1999.

The incorporation by reference of certain publications listed in the regulations is approved by the Director of the Federal Register as of May 3, 1999.

Comments for inclusion in the Rules Docket must be received on or before May 3, 1999.

ADDRESSES: Submit comments in triplicate to the Federal Aviation Administration (FAA), Transport Airplane Directorate, ANM–114, Attention: Rules Docket No. 98–NM–375–AD, 1601 Lind Avenue, SW., Renton, Washington 98055–4056.

The service information referenced in this AD may be obtained from Boeing Commercial Airplane Group, P.O. Box 3707, Seattle, Washington 98124–2207. This information may be examined at the FAA, Transport Airplane Directorate, 1601 Lind Avenue, SW., Renton, Washington; or at the Office of the Federal Register, 800 North Capitol Street, NW., suite 700, Washington, DC.

FOR FURTHER INFORMATION CONTACT: Dorr M. Anderson, Aerospace Engineer, Propulsion Branch, ANM–140S, FAA, Transport Airplane Directorate, Seattle Aircraft Certification Office, 1601 Lind Avenue, SW., Renton, Washington

98055–4056; telephone (425) 227–2684; fax (425) 227–1181.

SUPPLEMENTARY INFORMATION: The FAA has received a report indicating that chafing of the direct current (DC) powered float switch wiring insulation in the center fuel tank has occurred on eight Boeing Model 737–200 series airplanes. These airplanes had accumulated between 32,000 and 85,000 total flight hours. Such chafing may be attributed to vibrational contact between the conduit and float switch wiring. Chafing of the float switch wiring insulation in the center fuel tank, if not corrected, could result in arcing from the wiring to the in-tank conduit, which could present an ignition source inside the fuel tank and consequent fire/explosion.

Similar Airplanes

The center fuel tank float switch installation on certain Boeing Model 737–100, –300, –400, and –500 series airplanes is similar to that on the affected Boeing Model 737–200 series airplanes. Therefore, the FAA has determined that all of these models may be subject to the unsafe condition identified in this AD.

Explanation of Relevant Service Information

The FAA has reviewed and approved Boeing Alert Service Bulletin 737–28A1132, dated December 2, 1998, and Revision 1, dated January 15, 1999. The alert service bulletin describes the following procedures:

1. Removing the float switch and wiring from the center fuel tank, performing a visual inspection of the float switch wiring to detect discrepancies (i.e., evidence of electrical arcing, exposure of the copper conductor, presence or scent of fuel on the electrical wires, or worn insulation), and performing corrective actions. (The major corrective actions include measuring the resistance between the wires and the float switch housing; reusing the existing float switch and wiring or replacing the discrepant float switch and wiring with a new float switch and wiring; installing double Teflon sleeving over the wiring of the float switch; and replacing any section of electrical conduit where arcing or leaking has occurred with a new section.)

2. Deactivating the float switch (i.e., cut the two wires for the float switch at the splices on the front spar and cap and stow the four wire ends; or cut, stow, and splice the two wires for the float switch at the splices on the front spar), painting a Caution that shows a conservative maximum fuel capacity for the center tank on the underside of the right-hand wing near the fueling station door, and installing an INOP placard on the fueling panel, as applicable.

3. Performing modified fueling procedures following deactivation of the float switch.

The FAA also has reviewed Boeing Telex M–7200–98–04486, dated December 1, 1998, which describes two manual fueling procedures for the center fuel tank after the float switch has been deactivated by either of the methods described above.

Accomplishment of the actions specified in the alert service bulletin and telex is intended to adequately address the identified unsafe condition.

Explanation of the Requirements of the Rule

Since an unsafe condition has been identified that is likely to exist or develop on other airplanes of the same type design, this AD is being issued to detect and correct chafing of the float switch wiring insulation in the center fuel tank and the resultant arcing from the wiring to the conduit, which could present an ignition source inside the fuel tank and consequent fire/explosion. This AD requires accomplishment of the actions specified in the alert service bulletin and telex described previously; except as discussed below.

This AD also includes a provision that supersedes the FAA-approved Master Minimum Equipment List (MMEL), in that it allows dispatch of the airplane with the center fuel tank float switch deactivated in accordance with Boeing Alert Service Bulletin 737–28A1132, until replacement float switches and wiring are available for installation. The FAA-approved MMEL allows dispatch of the airplane with the ''Pressure Fueling System'' inoperative up to 10 days. (The float switch wiring circuit is part of the ''Pressure Fueling System.'') The FAA has been notified by the manufacturer that it will take approximately 18 months to obtain required parts from the issuance of Boeing Alert Service Bulletin 737–28–A1132, dated December 2, 1998. The FAA finds that the 18-month period will accommodate the time necessary for affected operators to order, obtain, and install the necessary parts required for the replacement of the float switch, without adversely affecting safety. The FAA also finds that such a provision will eliminate schedule disruptions. Absence of such operational relief could create a burden for operators if required parts were not readily available at certain airports or locations.

Differences Between the AD and the Relevant Alert Service Bulletin

Operators should note that the applicability of this AD affects certain Boeing Model 737–100, –200, –300, –400, and –500 series airplanes, on which the center wing tanks are activated; excluding those airplanes equipped with center wing tank volumetric topoff systems, or alternate current (AC) powered center tank float switches. This differs from the effectivity listing of the referenced alert service bulletin. While it is assumed that an operator will know the models of airplanes that it operates, there is a potential that the operator will not know or be aware of specific items that are installed on its airplanes. For this reason, it may be necessary for operators to check their records to determine if center wing tank volumetric topoff systems, or alternate current (AC) powered center tank float switches have been installed on their fleet of airplanes. Such a check will identify airplanes that are subject to the unsafe condition of this AD.

Operators also should note that, although the referenced alert service bulletin contains modified fueling procedures following deactivation of the float switch, this AD requires accomplishment of the manual fueling procedures specified in Boeing Telex M–7200–98–04486, as described above. The FAA finds that the procedures specified in the telex are more detailed than those in the alert service bulletin. The procedures specified in the telex provide step-by-step fueling instructions for airplanes with a deactivated center tank float switch to minimize the possibility of fuel spills.

Prior to utilizing these fueling procedures, this AD requires operators to ensure that airplane fueling crews are properly trained in accordance with the procedures specified in the telex, or the procedures approved by the FAA. Prior to each occurrence of fueling the airplane, this AD requires a check to verify that the fueling panel center tank quantity indicator is operative, and replacement of the indicator with a serviceable indicator, if necessary. Accomplishment of such training and a check will provide the proper safeguards necessary to minimize fuel spills during airplane fueling.

Interim Action

The FAA is considering further rulemaking action to supersede this AD to require, within 18 months after accomplishment of the actions specified in paragraphs (c) and (d) of this AD, and within 15,000 flight hours after

reinstalling any existing float switch having worn insulation and double Teflon sleeving, replacement of the float switch and wiring with a new float switch and wiring. However, the planned compliance time for these actions is sufficiently long so that prior notice and time for public comment will be practicable.

Determination of Rule's Effective Date

Since a situation exists that requires the immediate adoption of this regulation, it is found that notice and opportunity for prior public comment hereon are impracticable, and that good cause exists for making this amendment effective in less than 30 days.

Comments Invited

Although this action is in the form of a final rule that involves requirements affecting flight safety and, thus, was not preceded by notice and an opportunity for public comment, comments are invited on this rule. Interested persons are invited to comment on this rule by submitting such written data, views, or arguments as they may desire. Communications shall identify the Rules Docket number and be submitted in triplicate to the address specified under the caption **ADDRESSES**. All communications received on or before the closing date for comments will be considered, and this rule may be amended in light of the comments received. Factual information that supports the commenter's ideas and suggestions is extremely helpful in evaluating the effectiveness of the AD action and determining whether additional rulemaking action would be needed.

Comments are specifically invited on the overall regulatory, economic, environmental, and energy aspects of the rule that might suggest a need to modify the rule. All comments submitted will be available, both before and after the closing date for comments, in the Rules Docket for examination by interested persons. A report that summarizes each FAA-public contact concerned with the substance of this AD will be filed in the Rules Docket.

Commenters wishing the FAA to acknowledge receipt of their comments submitted in response to this rule must submit a self-addressed, stamped postcard on which the following statement is made: ''Comments to Docket Number 98–NM–375–AD.'' The postcard will be date stamped and returned to the commenter.

Regulatory Impact

The regulations adopted herein will not have substantial direct effects on the States, on the relationship between the national government and the States, or on the distribution of power and responsibilities among the various levels of government. Therefore, in accordance with Executive Order 12612, it is determined that this final rule does not have sufficient federalism implications to warrant the preparation of a Federalism Assessment.

The FAA has determined that this regulation is an emergency regulation that must be issued immediately to correct an unsafe condition in aircraft, and that it is not a ''significant regulatory action'' under Executive Order 12866. It has been determined further that this action involves an emergency regulation under DOT Regulatory Policies and Procedures (44 FR 11034, February 26, 1979). If it is determined that this emergency regulation otherwise would be significant under DOT Regulatory Policies and Procedures, a final regulatory evaluation will be prepared and placed in the Rules Docket. A copy of it, if filed, may be obtained from the Rules Docket at the location provided under the caption **ADDRESSES**.

List of Subjects in 14 CFR Part 39

Air transportation, Aircraft, Aviation safety, Incorporation by reference, Safety.

Adoption of the Amendment

Accordingly, pursuant to the authority delegated to me by the Administrator, the Federal Aviation Administration amends part 39 of the Federal Aviation Regulations (14 CFR part 39) as follows:

PART 39—AIRWORTHINESS DIRECTIVES

1. The authority citation for part 39 continues to read as follows:

Authority: 49 U.S.C. 106(g), 40113, 44701.

§ 39.13 [Amended]

2. Section 39.13 is amended by adding the following new airworthiness directive:

99–05–12 Boeing: Amendment 39–11060. Docket 98–NM–375–AD.

Applicability: Model 737–100, –200, –300, –400, and –500 series airplanes, on which the center wing tanks are activated; excluding those airplanes equipped with center wing tank volumetric topoff systems, or alternate current (AC) powered center tank float switches; certificated in any category.

Note 1: This AD applies to each airplane identified in the preceding applicability provision, regardless of whether it has been modified, altered, or repaired in the area subject to the requirements of this AD. For airplanes that have been modified, altered, or repaired so that the performance of the requirements of this AD is affected, the owner/operator must request approval for an alternative method of compliance in accordance with paragraph (f) of this AD. The request should include an assessment of the effect of the modification, alteration, or repair on the unsafe condition addressed by this AD; and, if the unsafe condition has not been eliminated, the request should include specific proposed actions to address it.

Compliance: Required as indicated, unless accomplished previously.

To detect and correct chafing of the float switch wiring insulation in the center fuel tank and the resultant arcing from the wiring to the in-tank conduit, which could present an ignition source inside the fuel tank and consequent fire/explosion, accomplish the following:

(a) Prior to the accumulation of 30,000 total flight hours, or within 30 days after the effective date of this AD, whichever occurs later, accomplish the requirements of paragraph (b) or (c) of this AD.

(b) Remove the fueling float switch and wiring from the center fuel tank and perform a visual inspection of the float switch wiring to detect discrepancies (i.e., evidence of electrical arcing, exposure of the copper conductor, presence or scent of fuel on the electrical wires, or worn insulation), in accordance with Part 1 of the Accomplishment Instructions of Boeing Alert Service Bulletin 737–28A1132, dated December 2, 1998, or Revision 1, dated January 15, 1999. Pay particular attention to the wire bundle where it passes through the wing pylon vapor seals and under the wire bundle clamps.

(1) If no discrepancy is detected, prior to further flight, accomplish either paragraph (b)(1)(i) or (b)(1)(ii) of this AD.

(i) Measure the resistance between the wires and the float switch housing, in accordance with the alert service bulletin.

(A) If the resistance is less than 200 megohms, prior to further flight, replace the float switch with a new float switch, and install double Teflon sleeving over the wiring of the float switch, in accordance with the alert service bulletin; except, if the replacement float switch and wiring are not available, prior to further flight, accomplish the requirements specified in paragraphs (c) and (d) of this AD.

(B) If the resistance is greater than or equal to 200 megohms, prior to further flight, blow dirt out of the conduit, install double Teflon sleeving over the wiring of the float switch, and reinstall the existing float switch, in accordance with the alert service bulletin.

(ii) Replace the float switch and wiring with a new float switch and wiring, and install double Teflon sleeving over the wiring of the float switch, in accordance with the alert service bulletin; except, if the replacement float switch and wiring are not available, prior to further flight, accomplish the requirements specified in paragraphs (c) and (d) of this AD.

(2) If any worn insulation is detected, and if no copper conductor is exposed, and if no evidence of arcing is detected; accomplish the requirements specified in either paragraph (b)(1)(i) or (b)(1)(ii) of this AD.

(3) If any electrical arcing or exposed copper conductor is detected, prior to further flight, accomplish either paragraph (b)(3)(i) or (b)(3)(ii) of this AD.

(i) Replace any section of the electrical conduit where the arcing occurred with a new section, in accordance with the alert service bulletin, and accomplish the requirements specified in paragraph (b)(1)(ii) of this AD.

(ii) Perform a visual inspection to detect fuel leaks of the electrical conduit, in accordance with the alert service bulletin.

(A) If no fuel leak is detected, prior to further flight, accomplish the requirements specified in paragraph (b)(1)(ii) of this AD. Repeat the inspection required by paragraph (b)(3)(ii) of this AD thereafter at intervals not to exceed 1,500 flight hours, until the replacement required by paragraph (b)(3)(ii)(B) of this AD is accomplished.

(B) If any fuel leak is detected, prior to further flight, replace any section of the electrical conduit where the leak is with a new section, in accordance with the alert service bulletin. Prior to further flight after accomplishment of the replacement, accomplish the requirements specified in paragraph (b)(1)(ii) of this AD. Accomplishment of electrical conduit replacement constitutes terminating action for the repetitive inspection requirements of paragraph (b)(3)(ii)(A) of this AD.

(4) If any presence or scent of fuel on the electrical wires is detected, prior to further flight, locate the source of the leak and replace the damaged conduit with a new conduit, in accordance with the alert service bulletin; and accomplish the requirements specified in either paragraph (b)(1)(i) or (b)(1)(ii) of this AD, unless accomplished previously in accordance with paragraph (b)(1), (b)(2), or (b)(3) of this AD.

(c) Accomplish the requirements specified in either paragraph (c)(1) or (c)(2) of this AD, in accordance with Part 2 of the Accomplishment Instructions of Boeing Alert Service Bulletin 737–28A1132, dated December 2, 1998, or Revision 1 dated January 15, 1999.

(1) Deactivate the center tank float switch (i.e., cut the two wires for the float switch at the splices on the front spar and cap and stow the four wire ends); paint a Caution that shows a conservative maximum fuel capacity for the center tank on the underside of the right-hand wing near the fueling station door; and install an INOP placard on the fueling panel.

(2) Deactivate the center tank float switch (i.e., cut, stow, and splice the two wires for the float switch at the splices on the front spar), and paint a Caution that shows a conservative maximum fuel capacity for the center tank on the underside of the right-hand wing near the fueling station door.

(d) For airplanes on which the requirements specified in paragraph (c) of this AD have been accomplished: Accomplish the requirements specified in paragraph (d)(1), (d)(2), and (d)(3) of this AD.

(1) Operators must ensure that airplane fueling crews are properly trained in accordance with the procedures specified in Boeing Telex M–7200–98–04486, dated December 1, 1998, or procedures approved by the FAA. This one-time training must be accomplished prior to utilizing the procedures specified in paragraph (d)(3) of this AD.

(2) Prior to fueling the airplane, perform a check to verify that the fueling panel center tank quantity indicator is operative. Repeat this check thereafter prior to fueling the airplane. If the fueling panel center tank quantity indicator is not operative, prior to further flight, replace the fueling panel center tank quantity indicator with a serviceable part.

(3) One of the two manual fueling procedures for the center fuel tank must be used for each fueling occurrence, in accordance with Boeing Telex M–7200–98–04486, dated December 1, 1998, or a method approved by the FAA.

Note 2: For the purposes of this AD, the term ''the FAA,'' is defined in paragraph (d) of this AD as ''the cognizant Principal Maintenance Inspector (PMI).''

Note 3: Where there are differences between the Boeing Alert Service Bulletin 737–28A1132 and this AD, the AD prevails.

(e) Dispatch with the center fuel tank float switch deactivated, in accordance with Boeing Alert Service Bulletin 737–28A1132, dated December 2, 1998, or Revision 1, dated January 15, 1999, is allowed until replacement float switches and wiring are available for installation. Where there are differences between the Master Minimum Equipment List (MMEL) and the AD, the AD prevails.

(f) An alternative method of compliance or adjustment of the compliance time that provides an acceptable level of safety may be used if approved by the Manager, Seattle Aircraft Certification Office (ACO), FAA, Transport Airplane Directorate. Operators shall submit their requests through an appropriate FAA PMI, who may add comments and then send it to the Manager, Seattle ACO.

Note 4: Information concerning the existence of approved alternative methods of compliance with this AD, if any, may be obtained from the Seattle ACO.

(g) Special flight permits may be issued in accordance with sections 21.197 and 21.199 of the Federal Aviation Regulations (14 CFR 21.197 and 21.199) to operate the airplane to a location where the requirements of this AD can be accomplished.

(h) Except as provided by paragraphs (d)(1) and (d)(2) of this AD, the actions shall be done in accordance with Boeing Alert Service Bulletin 737–28A1132, dated December 2, 1998; Boeing Alert Service Bulletin 737–28A1132, Revision 1, dated January 15, 1999; and Boeing Telex M–7200–98–04486, dated December 1, 1998, as applicable. This incorporation by reference was approved by the Director of the Federal Register in accordance with 5 U.S.C. 552(a) and 1 CFR part 51. Copies may be obtained from Boeing Commercial Airplane Group, P.O. Box 3707, Seattle, Washington 98124–2207. Copies may be inspected at the FAA, Transport Airplane Directorate, 1601 Lind Avenue, SW., Renton, Washington; or at the Office of the Federal Register, 800 North Capitol Street, NW., suite 700, Washington, DC.

(i) This amendment becomes effective on March 18, 1999.

Issued in Renton, Washington, on February 23, 1999.

Darrell M. Pederson,

Acting Manager, Transport Airplane Directorate, Aircraft Certification Service.

[FR Doc. 99–5042 Filed 3–2–99; 8:45 am]

BILLING CODE 4910–13–U

DEPARTMENT OF TRANSPORTATION

Federal Aviation Administration

14 CFR Part 39

RIN 2120–AA64

[Docket No. 97–SW–14–AD; Amendment 39–11062; AD 99–05–14]

Airworthiness Directives; Eurocopter France Model SA. 315B, SA. 316B, SA. 316C, SA. 319B, and SE. 3160 Helicopters

AGENCY: Federal Aviation Administration, DOT.

ACTION: Final rule.

SUMMARY: This amendment adopts a new airworthiness directive (AD), applicable to Eurocopter France Model SA. 315B, SA. 316B, SA. 316C, SA. 319B, and SE. 3160 helicopters, that requires inspecting the main rotor blade cuff attachment fitting in the area of the main rotor blade (blade) attachment bolts for cracks, and removing and replacing the blade if a crack is found. This amendment is prompted by a report of a crack in a blade cuff attachment fitting/spar assembly that was discovered during fatigue testing by the manufacturer. The actions specified by this AD are intended to prevent failure of a blade cuff attachment fitting at a bolt hole location, loss of a blade, and subsequent loss of control of the helicopter.

EFFECTIVE DATE: April 7, 1999.

FOR FURTHER INFORMATION CONTACT: Richard Monschke, Aerospace Engineer, FAA, Rotorcraft Directorate, Rotorcraft Standards Staff, 2601 Meacham Blvd., Fort Worth, Texas 76137, telephone (817) 222–5116, fax (817) 222–5961.

SUPPLEMENTARY INFORMATION: A proposal to amend part 39 of the Federal Aviation Regulations (14 CFR part 39) to include an airworthiness directive (AD) that is applicable to Eurocopter France Model SA. 315B, SA. 316B, SA. 316C, SA. 319B, and SE. 3160 helicopters was published in the **Federal Register** on November 3, 1998 (63 FR 59252). That action proposed to require inspecting the blade cuff attachment fitting in the area of the blade attachment bolt holes

for cracks, and removing and replacing any blade in which a crack is found.

Interested persons have been afforded an opportunity to participate in the making of this amendment. No comments were received on the proposal or the FAA's determination of the cost to the public. The FAA has determined that air safety and the public interest require the adoption of the rule with only minor editorial changes that will neither increase the economic burden on any operator nor increase the scope of the AD.

The FAA estimates that 83 helicopters of U.S. registry will be affected by this AD, that it will take approximately 2 work hours per helicopter for the initial inspection and 2 work hours per helicopter for each repetitive inspection and that the average labor rate is $60 per work hour. Required parts will cost approximately $40,000 per blade, if needed. Based on these figures, the total cost impact of the AD on U.S. operators is estimated to be $49,960 for one inspection and one blade replacement for each helicopter per year.

The regulations adopted herein will not have substantial direct effects on the States, on the relationship between the national government and the States, or on the distribution of power and responsibilities among the various levels of government. Therefore, in accordance with Executive Order 12612, it is determined that this final rule does not have sufficient federalism implications to warrant the preparation of a Federalism Assessment.

For the reasons discussed above, I certify that this action (1) is not a ''significant regulatory action'' under Executive Order 12866; (2) is not a ''significant rule'' under DOT Regulatory Policies and Procedures (44 FR 11034, February 26, 1979); and (3) will not have a significant economic impact, positive or negative, on a substantial number of small entities under the criteria of the Regulatory Flexibility Act. A final evaluation has been prepared for this action and it is contained in the Rules Docket. A copy of it may be obtained from the Rules Docket at the FAA, Office of the Regional Counsel, Southwest Region, Attention: Rules Docket No. 97–SW–14–AD, 2601 Meacham Blvd., Room 663, Fort Worth, Texas 76137.

List of Subjects in 14 CFR Part 39

Air transportation, Aircraft, Aviation safety, Safety.

Adoption of the Amendment

Accordingly, pursuant to the authority delegated to me by the Administrator, the Federal Aviation Administration amends part 39 of the Federal Aviation Regulations (14 CFR part 39) as follows:

PART 39—AIRWORTHINESS DIRECTIVES

1. The authority citation for part 39 continues to read as follows:

Authority: 49 U.S.C. 106(g), 40113, 44701.

§ 39.13 [Amended]

2. Section 39.13 is amended by adding a new airworthiness directive to read as follows:

AD 99–05–14 Eurocopter France: Amendment 39–11062. Docket No. 97–SW–14–AD.

Applicability: Model SA. 315B, SA. 316B, SA. 316C, SA. 319B, and SE. 3160 helicopters, with a main rotor blade, part number (P/N) 3160S.11.10.000, 3160S.11.30.000, 3160S.11.35.000, 3160S.11.40.000, 3160S.11.45.000, 3160S.11.50.000, or 3160S.11.55.000, installed, certificated in any category.

Note 1: This AD applies to each helicopter identified in the preceding applicability provision, regardless of whether it has been modified, altered, or repaired in the area subject to the requirements of this AD. For helicopters that have been modified, altered, or repaired so that the performance of the requirements of this AD is affected, the owner/operator must use the authority provided in paragraph (c) to request approval from the FAA. This approval may address either no action, if the current configuration eliminates the unsafe condition, or different actions necessary to address the unsafe condition described in this AD. Such a request should include an assessment of the effect of the changed configuration on the unsafe condition addressed by this AD. In no case does the presence of any modification, alteration, or repair remove any helicopter from the applicability of this AD.

Compliance: (1) For blades with less than 400 hours time-in-service (TIS), required prior to the accumulation of 400 hours TIS, unless accomplished previously, and thereafter at intervals not to exceed 400 hours TIS; or (2) for blades with 400 hours or more TIS, required within 50 hours TIS or 30 calendar days after the effective date of this AD, whichever occurs first, unless accomplished previously, and thereafter at intervals not to exceed 400 hours TIS:

To prevent failure of a main rotor blade (blade) cuff attachment fitting at a bolt hole location, loss of a blade, and subsequent loss of control of the helicopter, accomplish the following:

(a) Inspect both upper and lower blade surfaces of each blade cuff for cracks (see Figure 1) as follows:

(1) Use a mild liquid detergent or equivalent to remove all dirt from the blade cuff.

(2) Inspect the blade cuff for cracks, paying particular attention to the area around the attaching bolts, using a 10-power or higher magnifying glass.

(3) If a crack is suspected, remove any paint and clean the area under inspection using a Naptha-type solvent or equivalent, and conduct a dye penetrant inspection. Completely isolate the area under inspection with self-adhesive aluminum tape to prevent solvent or penetrating dye seepage into the other areas of the blade.

(b) If a crack is detected, remove the blade and replace it with an airworthy blade.

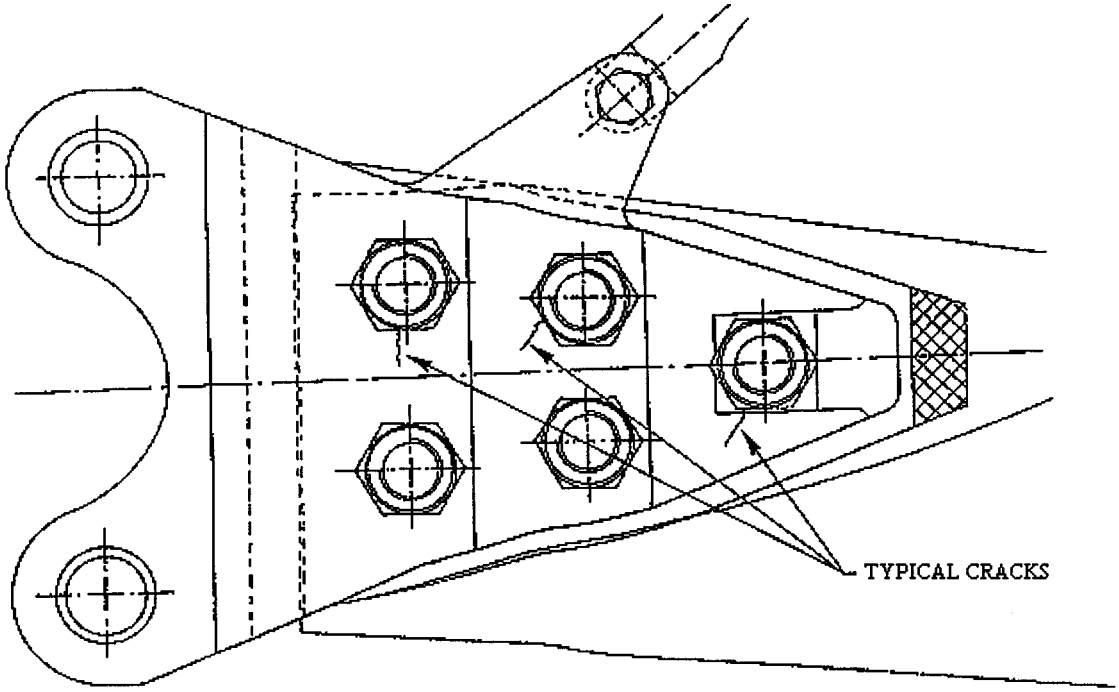

Figure 1

(c) An alternative method of compliance or adjustment of the compliance time that provides an acceptable level of safety may be used if approved by the Manager, Rotorcraft Standards Staff, Rotorcraft Directorate, FAA. Operators shall submit their requests through an FAA Principal Maintenance Inspector, who may concur or comment and then send it to the Manager, Rotorcraft Standards Staff.

Note 2: Information concerning the existence of approved alternative methods of compliance with this AD, if any, may be obtained from the Rotorcraft Standards Staff.

(d) Special flight permits may be issued in accordance with sections 21.197 and 21.199 of the Federal Aviation Regulations (14 CFR 21.197 and 21.199) to operate the helicopter to a location where the requirements of this AD can be accomplished.

(e) This amendment becomes effective on April 7, 1999.

Note 3: The subject of this AD is addressed in Direction Generale De L'Aviation Civile (France) AD 96–081–036(B)R1, and AD 96–082–054(B)R1, both dated April 24, 1996.

Issued in Fort Worth, Texas, on February 24, 1999.

Henry A. Armstrong,

Manager, Rotorcraft Directorate, Aircraft Certification Service.

[FR Doc. 99–5178 Filed 3–2–99; 8:45 am]

BILLING CODE 4910–13–U

DEPARTMENT OF THE TREASURY

Internal Revenue Service

26 CFR Parts 1 and 602

[TD 8795]

RIN 1545–AT78

Notice of Significant Reduction in the Rate of Future Benefit Accrual; Correction

AGENCY: Internal Revenue Service (IRS), Treasury.

ACTION: Correction to final regulations.

SUMMARY: This document contains corrections to Treasury Decision 8795, which was published in the **Federal Register** on Monday, December 14, 1998 (63 FR 68678) relating to defined benefit plans and to individual account plans that are subject to the funding standards of section 302 of the Employment Retirement Income Security Act of 1974.

DATES: These corrections are effective December 14, 1998.

FOR FURTHER INFORMATION CONTACT: Diane S. Bloom, (202) 622–6214 or Christine L. Keller, (202) 622–6090 (not toll-free numbers).

SUPPLEMENTARY INFORMATION:

Background

The final regulations that are the subject of these corrections are under section 411 of the Internal Revenue Code.

Need for Correction

As published, TD 8795 contains errors which may prove to be misleading and are in need of clarification.

Correction of Publication

Accordingly, the publication of the final regulations (TD 8795), which was the subject of FR Doc. 98–32925, is corrected as follows:

1. On page 68680, column 2, in the preamble under the paragraph heading ''Special Analyses'', line 12, the language ''24, 1996, the Regulatory Flexibility Act'' is corrected to read ''29, 1996, the Regulatory Flexibility Act''.

§ 602.101 [Corrected]

2. On page 68684, column 1, § 602.101(c), in the table under the column heading Current OMB control No., the OMB number ''1545–1447'' is corrected to read ''1545–1477''.

Cynthia E. Grigsby,

Chief, Regulations Unit, Assistant Chief Counsel (Corporate).

[FR Doc. 99–5129 Filed 3–2–99; 8:45 am]

BILLING CODE 4830–01–U

POSTAL SERVICE

39 CFR Part 20

International Priority Airmail Service

AGENCY: Postal Service.

ACTION: Final rule.

SUMMARY: The Postal Service published a proposed rule with a request for comment on November 25, 1998, in the **Federal Register** (63 FR 65153–65161) regarding proposed changes to International Priority Airmail Service (IPA). The Postal Service proposed to change the postage rates and conditions of service. The Postal Service hereby adopts the proposed rule, effective April 4, 1999.

EFFECTIVE DATE: 12:01 a.m., April 4, 1999.

FOR FURTHER INFORMATION CONTACT: Walter J. Grandjean, (202) 314–7256 or Dan Singer, (202) 314–3422.

SUPPLEMENTARY INFORMATION: International Priority Airmail Service (IPA) is a volume airmail letter service. Mailers have the opportunity to benefit from work sharing with the Postal Service and gain improved speed of delivery for presorted mail, which the Postal Service does not have to sort.

On February 28, 1998, the Postal Service adopted program changes to International Surface Air Lift Service (ISAL) (63 FR 3642–3650). The proposed changes to IPA will align it with ISAL in rate structure and preparation requirements. This will make it easier for mailers to participate in either service. The Postal Service published a proposed rule with a request for comment in the **Federal Register** on November 25, 1998, (63 FR 65153–65161) and requested comments by December 28, 1998. By that date the Postal received one comment from an international courier company.

The commentor fully supported the changes to IPA proposed by the Postal Service but suggested that mail to Canada be included in rate group 2 and that the proposal be implemented no later than February 28, 1999.

The Postal Service has reviewed the recommendation that Canada be included in rate group 2 of IPA service. The Postal Service does not believe that, at this time, it is possible to include Canada in rate group 2 of IPA service. This is because the costs associated with sending mail to Canada significantly differ from those associated with sending mail to all other countries in the rate group. Such differences would result in non-compensatory rates to the Postal Service where rate group 2 mailings included disproportionate volumes of Canadian mail.

The Postal Service believes that an effective date of February 28, 1999, does not provide sufficient time for customers, vendors, or the Postal Service to make changes to systems and procedures necessary to successfully implement the changes to IPA. Therefore, the Postal Service will implement the changes on April 4, 1999, which is the earliest practical date.

The Postal Service adopts the following amendments to the International Mail Manual, which is incorporated by reference in the Code of Federal Regulations. See 39 CFR 20.1.

List of Subjects in 39 CFR Part 20

Foreign relations, International postal services.

PART 20—[AMENDED]

1. The authority citation for 39 CFR Part 20 continues to read as follows:

Authority: 5 U.S.C. 552(a), 39 U.S.C. 401, 404, 407, 408.

2. The International Mail Manual is amended to incorporate program changes to Subchapter 280 International Priority Airmail Service as follows:

280 INTERNATIONAL PRIORITY AIRMAIL SERVICE

281 Description

281.1 General

International Priority Airmail (IPA) service is as fast as or faster than regular international airmail service. It is available to bulk mailers of all LC and AO items that are prepared by the sender in accordance with the requirements of this subchapter. Separate rates are provided for presorted mail and nonpresorted mail with drop shipment and volume discounts.

281.2 Qualifying Mail

Any item of the LC or AO classification, as defined in 141.2, qualifies. Letters, letter packages, postal cards, aerogrammes, regular printed matter, books and sheet music, publishers' periodicals, matter for the blind, and small packets, which are prepared in compliance with the applicable mailing conditions in this subchapter, may be sent in this service. Items do not have to be of the same size and weight to qualify.

281.3 Minimum Quantity Requirements

281.31 Worldwide Nonpresort Mail

The mailer must have a minimum of 11 pounds of LC/AO mail in the total mailing. The minimum does not apply to each country destination.

281.32 Presort Mail

The mailer must have a minimum of 11 pounds of presorted LC/AO mail to a single rate group to qualify for the presort rate for that rate group.

Note: Mail that cannot be made up in direct country packages (284.521) or in direct country sacks (284.61) does not qualify for the presort rates and is subject to the worldwide nonpresort rates.

281.4 Dutiable Items

Dutiable items may be sent in LC letter packages or AO small packets in accordance with the applicable rules in this subchapter for those classes of mail. Parcel post (CP) items, either ordinary or insured, may not be mailed as International Priority Airmail.

281.5 Deposit

281.51 Full Service

Mailings must be deposited and accepted at a business mail entry unit of the post office where the mailer holds an advance deposit account or postage meter license.

281.52 Drop Shipment

To qualify for the drop shipment rates, the mailer must tender the mail to one of the locations in 281.53. The mailer must pay postage at the drop shipment location either through an advance deposit account or postage meter license at the serving post office. As an alternative, mailers who are participating in a PVDS program (see DMM P750) may have the mail verified, accepted and paid for at the mailer's plant or at the origin post office serving the mailer's plant if authorized under DMM P750.2.2. Plant-verified drop shipment mail must be transported by the mailer to the drop shipment location and the mail accompanied by a clearance document Form 8125, Drop Shipment Clearance Document.

281.53 Drop Shipment Locations

Drop shipment rates are available from the following offices:

New York

Regular and plant-verified drop shipment:
AMC JFK BUILDING 250,
JFK INTERNATIONAL AIRPORT,
JAMAICA NY 11430–9998

California

Regular drop shipment:
SAN FRANCISCO P&DC,
1300 EVANS AVE,
SAN FRANCISCO CA 94188–9998,

Plant-verified drop shipment:
AMC SAN FRANCISCO,
BLDG 660 RD 6,
SAN FRANCISCO CA 94158–9998

Florida

Regular drop shipment:
MIAMI P&DC,
2200 NORTHWEST 72 AVE,
MIAMI FL 33152–9997

Plant-verified drop shipment:
AMC MIAMI,
MIAMI INTERNATIONAL AIRPORT,
MIAMI FL 33159–9998

Illinois

Regular and plant-verified drop shipment:
CHICAGO OHARE DROPSHIP ISAL SERVICE CENTER,
INTERNATIONAL PROCESSING CENTER ANNEX,
3333 N MOUNT PROSPECT RD,
FRANKLIN PARK IL 60131–1347

281.6 Special Services Not Available

Items sent in this service may not be registered.

282 Postage

282.1 Rates

282.11 General

There are two rate options for International Priority Airmail service: a presort rate option that has four rate groups and a worldwide nonpresort rate. For both options there are full service rates for mail deposited at offices other than the four drop shipment offices listed in 281.5, and drop ship rates for mail deposited at one of the four drop shipment offices. The per-piece rates and per-pound rates are shown in Exhibit 282.11. The per-piece rate of $0.10 or $0.25 applies to each piece regardless of its weight. The per-pound rate applies to the net weight (gross weight minus tare weight of sack) of the mail for the specific rate group. Fractions of a pound are rounded to the next whole pound for postage calculation.

EXHIBIT 282.11—INTERNATIONAL PRIORITY AIRMAIL RATES

Rate group	Piece rate	Pound rate	
		Full service	Dropship
1	$0.25	$5.00	$4.00
2	0.10	5.25	4.25
3	0.10	6.50	5.50
4	0.10	7.50	6.50
Worldwide ...	0.25	7.00	6.00

282.12 Volume Discount

Mailers who spend $2 million or more on IPA and ISAL in the preceding postal fiscal year may receive discounts off the rates shown in Exhibit 282.11 as follows:

a. $2 million to $5 million: 5% discount

b. Over $5 million to $10 million: 10% discount

c. Over $10 million: 15% discount

Mailers entitled to these discounts must place the full per-piece rate on each piece of mail if payment is by postage meter or mailer-precanceled stamps. The discount is calculated on the statement of mailing.

282.13 Qualifying for Volume Discounts

To qualify for volume discounts, mailers must apply in writing to:

MANAGER, MAIL ORDER,
INTERNATIONAL BUSINESS UNIT,
475 L'ENFANT PLAZA SW RM 370–IBU, WASHINGTON, DC 20260–6500

The Manager evaluates all requests and informs the mailer and the post office(s) of mailing whether discounts are approved and the level of discount. Mailers must supply the following information:

a. Postal fiscal year for the qualifying mail.

b. Permit number(s) and post office(s) where the permits are held.

c. Total revenue for the postal fiscal year.

d. Post office(s) where the discount is to be claimed.

The combined IPA and ISAL revenue is counted toward the discounts. The Postal Service will count as revenue to qualify for the volume discounts only postage paid by the permit holder. If a permit holder has more than one account, or accounts in several cities, then these revenues may be combined to qualify for discounts. Agents who prepare mail for the owner of the mail and mail paid by the owner's permit may not be included in the revenue to qualify for the discounts, except for the initial year (Postal Fiscal Year 1997, September 14, 1996, through September 12, 1997). Customers may be required to substantiate their request by providing copies of all postage statements for the appropriate postal fiscal year. All decisions of the manager, Mail Order are final.

282.14 Availability

IPA service is available to all foreign countries, as listed in Exhibit 284.522. The exhibit shows the rate group assigned to each country.

282.15 Presort Rates

To qualify for the presort Group 1, 2, 3, or 4 rates (see Exhibit 282.11), a mailing must consist of a minimum of 11 pounds to a specific rate group. This minimum applies to each rate group and not to the entire mailing (see 281.32). Within a rate group all mail addressed to an individual country must be sorted into direct country packages of 10 or more pieces (or 1 pound or more of mail) (284.521) and/or sacked in direct country sacks of 11 pounds or more (284.61). Mail that cannot be made up into direct country packages or direct country sacks must be sent at the worldwide nonpresort rates.

282.16 Separation by Rate Group

The mailer must specify the rate group on the back of Tag 115, International Priority Airmail, with the number 1, 2, 3, 4 or WW (Worldwide), and must physically separate the sacks by rate group at the time of mailing.

282.17 Computation of Postage

Postage is computed on PS Form 3652, Postage Statement—International Priority Airmail. Postage at the worldwide nonpresort rate is calculated by multiplying the number of pieces in the mailing by the applicable per-piece rate, multiplying the net weight (in whole pounds) of the entire mailing by the applicable per-pound rate, and then adding the two totals together. Postage at the presorted rates is calculated by multiplying the number of pieces in the mailing destined for countries in a specific rate group by the appropriate per-piece rate, multiplying the net weight (in whole pounds) of those pieces by the corresponding per-pound rate, and then adding the two totals together. Volume discounts are calculated on the postage statement.

282.2 Postage Payment Methods

282.21 General

282.211 Postage Meter or Permit Imprint

Postage must be paid by postage meter, permit imprint, or mailer-precanceled stamps (see DMM P023.3.0) or a combination. Postage charges are computed on PS Form 3652.

282.212 Piece Rate Portion

The applicable per-piece postage must be affixed to each piece by meter unless postage is paid by permit imprint (see 282.23).

282.213 Pound Rate Portion

Postage for the pound rate portion must be paid either by meter stamp(s) attached to the postage statement or from the mailer's authorized permit imprint advance deposit account.

282.22 Postage Meter

282.221 Postage Endorsement

When postage is paid by meter or mailer-precanceled stamps, each piece must be legibly endorsed with the words ''INTERNATIONAL PRIORITY AIRMAIL.''

282.222 Specifications for Endorsement

The endorsement required in 282.221 must appear on the address side of each piece and must be applied by a printing press, hand stamp, or other similar printing device. It must be printed above the name of the addressee and to the left or below the postage, or it may be printed adjacent to the meter stamp in either the postal inscription slug area or ad plate area. If the postal endorsement appears in the ad plate area, no other information may be printed in the ad plate. The endorsement may not be typewritten or hand drawn. The endorsement is not considered adequate if it is included as part of a decorative design or advertisement.

282.223 Unmarked Pieces

Unmarked pieces lacking the postage endorsement required by 282.221 are subject to the applicable LC/AO airmail single piece rates.

282.224 Drop Shipment of Metered Mail

Mailers who want to enter metered IPA mail at a post office other than where the meter is licensed must obtain a drop shipment authorization. To obtain an authorization, the mailer must submit a written request to the postmaster at the office where the mail will be entered (see DMM D072).

282.23 Permit Imprint

Mailers may use a permit imprint for mailings that contain identical weight pieces. Any of the permit imprints shown in Exhibit 152.3 are acceptable. The postage charges are computed on PS Form 3652 and deducted from the advance deposit account. Permit imprints must not denote Priority Mail, bulk mail, nonprofit, or other domestic or special rate mail. Mailers may use permit imprint with nonidentical weight pieces only if authorized to use postage mailing systems under DMM P710, P720, or P730.

283 Weight and Size Limits

See 223 and 233 for the weight and size limits for LC items sent in this service. See 243, 253, and 263 for the weight and size limits for AO items sent in this service.

284 Preparation Requirements for Individual Items

284.1 Addressing

See 122.

284.2 Marking

284.21 Airmail

The sender should mark ''PAR AVION'' or ''AIR MAIL'' on the address side of each piece. Use of bordered airmail envelopes is optional and may be used for items sent in this service if the envelope contains the ''AIR MAIL'' endorsement.

284.22 Class of Mail

284.221 Printed Matter

Printed matter is endorsed as required by weight:

a. Items weighing more than 4 pounds must be marked to specify the type of printed matter: ''PRINTED MATTER,'' ''PRINTED MATTER—BOOKS,'' ''PRINTED MATTER—SHEET MUSIC,'' or ''PRINTED MATTER—PERIODICALS,'' as appropriate (see 244.211).

b. Items weighing 4 pounds or less do not require any printed matter endorsement but may be marked with the endorsements in 284.221a at the mailer's option.

Unmarked printed matter items are subject to the mailing conditions for letters (see 220).

284.222 Letters/Letter Packages

Letters and letter packages that might be mistaken for another class of mail because of their weight or appearance should be marked ''LETTER'' on the address side (see 224.2).

284.223 Small Packets

Each small packet must be marked ''SMALL PACKET'' (see 264.21).

284.3 Sealing

Any item sent in this service may be sealed at the option of the sender.

284.4 Packaging

All items must be placed in envelopes or prepared in package form. See 224.4 for LC mail and 244.4 for AO mail.

284.5 Sorting Requirements for IPA

284.51 Worldwide Nonpresorted Mail

284.511 Working Packages

IPA mail paid at the nonpresorted rate must be made up into working packages. Letters and flats must be packaged separately, although nonidentical pieces may be commingled within each of these categories. Pieces that cannot be packaged because of their physical characteristics must be placed loose in the sack.

284.512 Facing of Nonpresorted Mail Within Package

All pieces in the working packages must be faced the same way.

284.52 Presorted Mail

284.521 Direct Country Packages

When there are 10 or more pieces or 1 pound or more of mail for the same country (except Great Britain and Mexico), it must be made up into a country package. Great Britain and Mexico require a finer sortation (see 284.523). At the mailer's option, a finer breakdown by city or postal code may be made based on sortation information provided by the postal administration of the destination country.

284.522 Country Package Label

a. The label (facing slip) for country packages that contain ten or more pieces to a specific country (except for Great Britain and Mexico) must be completed as follows:

Line 1: Foreign Exchange Office
Line 2: Country of Destination
Line 3: Mailer, Mailer Location

Example:

1150 VIENNA FLUG AUSTRIA RBA COMPANY WASHINGTON DC

b. See Exhibit 284.522 for Direct Country Package Label and Tag 178, CN 35 Par Avion, for information.

284.523 Country Packages to Great Britain and Mexico

Country packages to Great Britain and Mexico must be made up as follows:

a. Great Britain. When there are 10 or more pieces or 1 pound or more of mail per separation, mail to Great Britain must be sorted into packages as follows:

Separation Exchange Office (Line 1 Package Label)
LONDON CITY LONDONTOWN, SCOTLAND GLASGOW FWD, NORTHERN IRELAND BELFAST FWD, ALL OTHER GREAT BRITAIN GREAT BRITAIN, GREAT BRITAIN

Example:

LONDONTOWN GREAT BRITAIN MAILER, MAILER LOCATION

b. Mexico. Mail to Mexico must be sorted based on state separations. When a state separation contains 10 or more pieces or 1 pound or more of mail, it must be packaged and labeled to the designated foreign exchange office shown in Exhibit 284.523. When there are less than 10 pieces or 1 pound to one or more states in the grouping, package and label these pieces to the designated foreign exchange office listed for ''Remaining.'' When there are less than 10 pieces or 1 pound to one or more states in the grouping, package

and label these pieces to the designated foreign exchange office listed for ''Remaining.''

Example:

MEXICO 506 DF
MEXICO
MAILER, MAILER LOCATION

Exception: When there are less than 10 pieces or 1 pound of mail to the Mexican states of Baja Calif Norte, Baja Calif Sur, Chihuahua, Distrito Federal (Mexico City), Guerrero, and Sonora, package the pieces separately and affix a facing slip labeled to the U.S. International Exchange Office listed in Exhibit 284.622.

284.524 Facing of Pieces Within Country Package

All pieces in the country package must be faced in the same direction and a facing slip identifying the contents of the package must be placed on the address side of the top piece of each package in such a manner that it will not become separated from the package.

Note: The pressure-sensitive labels and optional endorsement lines used domestically for presort mail are prohibited for International Priority Airmail.

284.53 Physical Characteristics and Requirements for Packages

284.531 Thickness

Packages of letter-size mail should be no thicker than approximately a handful of mail (4 to 6 inches thick).

284.532 Securing Packages

Each package must be securely tied. Placing rubber bands around the length and then the girth is the preferred method of securing packages of letter-size mail. Plastic strapping placed around the length and then the girth is the preferred method of securing packages of flat-size mail.

284.533 Separation of Packages

Letter-size and flat-size mail must be packaged separately. LC and AO mail classes may be commingled in a letter-size or flat-size mail package.

284.6 Sacking Requirements

284.61 Direct Country Sack (11 Pounds or More)

284.611 General

When there are 11 or more pounds of mail addressed to the same country (including Great Britain and Mexico), the mail must be packaged and enclosed in blue international airmail sacks and labeled to the country with Tag 178, Airmail Bag Label LC (CN 35/AV 8) (white). All types of mail, including letter-size packages, flat-size packages, and loose items for each destination, can be commingled in the same sack and counted toward the 11-pound minimum.

284.612 Direct Country Sack Tags

Direct country sacks must be labeled with Tag 178. The tag is white and specially coded to route the mail to a specific country and airport of destination. The blocks on the tag for date, weight, and dispatch information must be completed by the Postal Service and may not be completed by the mailer. The mailer must complete the ''To'' block showing the destination country. Tag 115, International Priority Airmail, must also be affixed to the Direct Country Sacks. Tag 115 is a ''Day-Glo'' pink tag that identifies the mail to ensure it receives priority handling. The mailer must designate on the back of Tag 115 the applicable rate group, using a number 1, 2, 3, 4, or WW (Worldwide).

284.62 Mixed Direct Country Package Sacks

284.621 General

The direct country packages containing 10 or more pieces or 1 pound or more of mail destined to a specific country that cannot be made up in direct country sacks must be enclosed in orange Priority Mail sacks unless other equipment is specified by the acceptance office.

284.622 Mixed Direct Country Sack Label

The sack label must be completed as follows. (See Exhibit 284.622 for list of U.S. International Exchange Offices.)

Line 1: Appropriate U.S. Exchange Office and Routing Code
Line 2: Contents—DRX
Line 3: Mailer, Mailer Location

Example:

AMC SEATTLE WA 980 INT'L PRIORITY AIRMAIL—DRX ABC STORE SEATTLE WA

284.63 Worldwide Nonpresort Mail Sacks

284.631 General

The working packages of mixed country mail and loose items must be enclosed in orange Priority Mail sacks unless other equipment is specified by the acceptance office. Nonpresorted letter-size mail may be presented in trays if authorized by the acceptance office.

Note: Working packages of mixed country mail cannot be enclosed in mixed direct country package sacks.

284.632 Worldwide Nonpresort Mail Sack Label

The sack label must be completed as follows:

Line 1: Appropriate U.S. Exchange Office and Routing Code
Line 2: Contents—WKG
Line 3: Mailer, Mailer Location

Example:

AMC ATLANTA GA 300 INT'L PRIORITY AIRMAIL—WKG CPA COMPANY ATLANTA GA

See Exhibit 284.622 for list of U.S. International Exchange Offices.

284.64 Tags and Weight Maximum for Sacks

284.641 Tag 115 and Tag 178

All IPA sacks (direct country, mixed direct country package sacks, and worldwide nonpresort mail sacks) must be labeled with Tag 115, International Priority Airmail. Tag 115 is a ''Day-Glo'' pink tag that identifies IPA mail to ensure that it receives priority treatment. Tag 178 (see section 284.611) is a dispatching tag to be used only for direct country sacks. Tag 178 is white and specially coded to route the mail to a specific country and airport of destination. The Postal Service must complete the blocks on the tag for date, weight, and dispatch information. The mailer must complete only the ''To'' block showing the destination country. Postal tags and sacks are available from the post office.

284.642 Sack Weight Maximum

The maximum weight of the sack and contents must not exceed 66 pounds.

284.7 Customs Forms Requirements

284.71 Letters and Letter Packages

See 224.5.

284.72 Printed Matter

See 244.6.

284.73 Small Packets

See 264.5.

EXHIBIT 284.522.—FOREIGN EXCHANGE OFFICE AND COUNTRY RATE GROUPS, INFORMATION FOR DIRECT COUNTRY PACKAGE LABEL (FACING SLIP), TAG 178, 3-LETTER COUNTRY EXCHANGE OFFICE CODE, AND EXCHANGE OFFICE

Rate group	Country	3-letter exchange office code	Exchange office
4	Afghanistan	KBL	Kabul.
1	Albania	TIA	Tirana.
4	Algeria	ALG	Algiers.
1	Andorra [1]		
4	Angola	LAD	Luanda.
2	Anguilla	AXA	The Valley.
2	Antigua and Barbuda	ANU	St. John's.
2	Argentina	BUE	Buenos Aires Avion.
4	Armenia	EVN	Yerevan.
2	Aruba	AUA	Oranjestad.
1	Ascension [1]		
3	Australia [2]	SYD	Sydney.
1	Austria	VIE	1150 Vienna Flug.
4	Azerbaijan	BAK	Baku.
1	Azores [1]		
2	Bahamas	NAS	Nassau.
4	Bahrain	BAH	Bahrain.
4	Bangladesh	DAC	Dhaka 17.
2	Barbados	BGI	Bridgetown.
1	Belarus	MOW	Moscow PCI–1.
1	Belgium	BRU	Brussels X.
2	Belize	BZE	Belize City.
4	Benin	COO	Cotonou.
2	Bermuda	BDA	Hamilton.
4	Bhutan[1]		
2	Bolivia	LPB	La Paz.
2	Bonaire[1],[3]		
1	Bosnia-Herzegovina	SJJ	Sarajevo.
4	Botswana	GBE	Gabrone.
2	Brazil	RIO	Rio de Janeiro.
2	British Virgin Islands	EIS	Roadtown Tortola.
3	Brunei Darussalam	BWN	Bandar Seri Begawan.
1	Bulgaria	SOF	Sofia.
4	Burkina Faso	OUA	Ouagadougou.
4	Burma (Myanmar)	RGN	Rangoon.
4	Burundi	BJM	Bujumbura.
3	Cambodia	PNH	Phnom Penh.
4	Cameroon	DLA	Douala.
4	Cape Verde	SID	SAL.
2	Cayman Islands	GCM	Grand Cayman.
4	Central African Republic	BGF	Bangui.
4	Chad	NDJ	N'Djamena.
2	Chile	SCL	Santiago.
3	China	PEK	Beijing.
2	Colombia	BOG	Bogota Aeropuerto.
4	Comoros Islands[1]		
4	Congo, Dem. Rep. of the	FIH	Kinshasa CTT.
4	Congo, Rep. of the (Brazzaville)	BZV	Brazzaville.
4	Corsica[1]		
2	Costa Rica	SJO	San Jose.
4	Côte d'Ivoire	ABJ	Abidjan.
1	Croatia	ZAG	Zagreb.
2	Cuba	HAV	Havana.
	Curacao[3]	CUR	Willemstad.
4	Cyprus	NIC	Nicosia.
1	Czech Republic	PRG	Prague 120.
1	Denmark	CPH	Copenhagen PTM.
4	Djibouti	JIB	Djibouti.
2	Dominica	DOM	Roseau.
2	Dominican Republic	SDQ	Santo Domingo.
2	Ecuador	UIO	Quito.
4	Egypt	CAI	Cairo Int'l Airport.
2	El Salvador	SAL	San Salvador.
4	Equatorial Guinea	BSG	Bata.
4	Eritrea	ASM	Asmara.
1	Estonia	TLL	Tallinn.
4	Ethiopia	ADD	Addis Ababa.
2	Falkland Islands[1]		
1	Faroe Islands[1]		

EXHIBIT 284.522.—FOREIGN EXCHANGE OFFICE AND COUNTRY RATE GROUPS, INFORMATION FOR DIRECT COUNTRY PACKAGE LABEL (FACING SLIP), TAG 178, 3-LETTER COUNTRY EXCHANGE OFFICE CODE, AND EXCHANGE OFFICE—Continued

Rate group	Country	3-letter exchange office code	Exchange office
3	Fiji	NAN	Nadi.
1	Finland	HEL	Helsinki.
1	France	PAR	Paris Aviation Passe.
2	French Guiana	CAY	Cayenne.
3	French Polynesia	PPT	Papeete.
4	Gabon	LBV	Libreville.
4	Gambia	BJL	Banjul.
4	Georgia, Republic of	TBS	Tbilisi.
1	Germany	FRA	Frankfurt am Main Flughafen.
4	Ghana	ACC	Accra.
1	Gibraltar	GIB	Gibraltar.
1	Great Britain		
	London City	LON	Londontown.
	Northern Ireland	BFS	Belfast.
	Scotland	GLA	Glasgow.
	Great Britain	LON	Great Britain.
1	Greece	ATH	Athens.
1	Greenland [1]		
2	Grenada	GND	St. George's.
2	Guadeloupe	PTP	Pointe-a-Pitre.
2	Guatemala	GUA	Guatemala.
4	Guinea	CKY	Conakry.
4	Guinea-Bissau	BXO	Bissau.
2	Guyana	GEO	Georgetown.
2	Haiti	PAP	Port-au-Prince.
2	Honduras	TGU	Tegucigalpa.
3	Hong Kong	HKG	Victoria.
1	Hungary	BUD	Budapest 72 Trans.
1	Iceland	REK	Reykjavik.
4	India	DEL	Delhi Air.
3	Indonesia	JKT	Jakarta Soekarno-Hatta.
4	Iran	THR	Tehran.
4	Iraq	BGW	Baghdad.
1	Ireland	DUB	Dublin
4	Israel	TLV	Tel Aviv-Yafo.
1	Italy	ROM	Rome Ferr.
2	Jamaica	KIN	Kingston.
3	Japan	TYO	Tokyo APT FWD.
4	Jordan	AMM	Amman.
4	Kazakhstan	ALA	Alma Ata.
4	Kenya	NBO	Nairobi.
3	Kiribati	TRW	Tarawa.
3	Korea, Dem. People's Rep. (North) [1]		
3	Korea, Republic of (South)	SEL	Seoul.
4	Kuwait	KWI	Kuwait.
1	Kyrgyzstan	MOW	Moscow PCI–1
3	Laos	VTE	Vientiane.
1	Latvia	RIX	Riga.
4	Lebanon	BEY	Beirut.
4	Lesotho	MSU	Maseru.
4	Liberia	MLW	Monrovia.
4	Libya	TIP	Tripoli.
1	Liechtenstein [1]		
1	Lithuania	VNO	Vilnius.
1	Luxembourg	LUX	Luxembourg Ville.
3	Macao	HKG	Macau.
1	Macedonia	BEG	Belgrade.
4	Madagascar	TNR	Antananarivo.
1	Madeira Islands	FNC	Funchal.
4	Malawi	BLZ	Limbe C.S.O.
3	Malaysia	KUL	Kuala Lumpur.
4	Maldives	MLE	Male.
4	Mali	BKO	Bamako.
4	Malta	VLT	Valletta.
2	Martinique	FDF	Fort de France.
4	Mauritania	NKC	Nouakchott.
4	Mauritius	MRU	Mauritius.

EXHIBIT 284.522.—FOREIGN EXCHANGE OFFICE AND COUNTRY RATE GROUPS, INFORMATION FOR DIRECT COUNTRY PACKAGE LABEL (FACING SLIP), TAG 178, 3-LETTER COUNTRY EXCHANGE OFFICE CODE, AND EXCHANGE OFFICE—Continued

Rate group	Country	3-letter exchange office code	Exchange office
2	Mexico See Exhibit 284.523.		
4	Moldova	KIV	Kishinev.
1	Monaco	MCM	Monte Carlo.
3	Mongolia [1]		
2	Montserrat	MNI	Plymouth.
4	Morocco	CAS	Casablanca P/PAL.
4	Mozambique	MPM	CPI Maputo.
4	Namibia	WDH	Windhoek.
3	Nauru	INU	Nauru.
3	Nepal	KTM	Kathmandu.
1	Netherlands	AMS	Amsterdam EXP.
2	Netherlands Antilles [1], [3]		
3	New Caledonia	NOU	Noumea.
3	New Zealand	AKL	Auckland.
2	Nicaragua	MGA	Managua.
4	Niger	NIM	Niamey.
4	Nigeria	LOS	Lagos.
1	Norway	OSL	Oslo Transit.
4	Oman	MCT	Muscat.
4	Pakistan	KHI	Karachi.
2	Panama	PTY	Panama City.
3	Papua New Guinea	POM	Port Moresby.
2	Paraguay	ASU	Asuncion.
2	Peru	LIM	Lima Transito.
3	Philippines	MNL	Manila.
3	Pitcairn Island [1].		
1	Poland	WAW	Warsaw [3].
1	Portugal	LIS	Lisbon Province.
4	Qatar	DOH	Doha.
4	Reunion	RUN	St. Denis.
1	Romania	BUH	Bucharest.
1	Russia	MOW	Moscow PCI–1.
4	Rwanda	KGL	Kigali.
2	Saba [1],[3]		
2	Saint Christopher and Nevis	SKB	Basseterre.
2	Saint Eustatius [1],[3]		
4	Saint Helena [1]		
2	Saint Lucia	SLU	Castries.
2	Saint Maarten [3]	SXM	Philipsburg
2	Saint Pierre and Miquelon [1]		
2	Saint Vincent and The Grenadines	SVD	Kingstown.
1	San Marino [1]		
1	Sao Tome and Principe [1]		
4	Saudi Arabia	DHA	Dhahran APT.
4	Senegal	DKR	Dakar Yoff.
1	Serbia-Montenegro (Yugoslavia)	BEG	Belgrade.
4	Seychelles	SEZ	Mahe Is.
4	Sierra Leone	FNA	Freetown.
3	Singapore	SIN	Singapore.
1	Slovak Republic (Slovakia)	BTS	Bratislava.
1	Slovenia	LJU	Ljubljana.
3	Solomon Islands	HIR	Honiara.
4	Somalia	MGQ	Mogadishu.
4	South Africa	JNB	Johannesburg.
1	Spain	MAD	Madrid Airport.
4	Sri Lanka	CMB	Colombo.
4	Sudan	KRT	Khartoum.
2	Suriname	PBM	Paramaribo.
4	Swaziland	MTS	Manzini.
1	Sweden	STO	Stockholm Flug.
1	Switzerland	GVA	Geneva 1 .
4	Syria	DAM	Damascus.
3	Taiwan	TPE	Taipei.
4	Tajikistan	MOW	Moscow PCI–1 .
4	Tanzania	DAR	Dar es Salaam.
3	Thailand	BKK	Bangkok.
4	Togo	LFW	Lome.
3	Tonga	NUK	Nukualofa.

EXHIBIT 284.522.—FOREIGN EXCHANGE OFFICE AND COUNTRY RATE GROUPS, INFORMATION FOR DIRECT COUNTRY PACKAGE LABEL (FACING SLIP), TAG 178, 3-LETTER COUNTRY EXCHANGE OFFICE CODE, AND EXCHANGE OFFICE—Continued

Rate group	Country	3-letter exchange office code	Exchange office
2	Trinidad and Tobago	POS	Port of Spain.
4	Tristan da Cunha [1]		
4	Tunisia	TUN	Tunis.
1	Turkey	IST	Istanbul Hava Alani.
1	Turkmenistan	MOW	Moscow PCI–1 .
2	Turks and Caicos Islands	TKI	Grand Turk.
3	Tuvalu [1]		
4	Uganda	KLA	Kampala.
4	Ukraine	IEV	Kiev.
4	United Arab Emirates	DXB	Dubai.
2	Uruguay	MVD	Montevideo.
4	Uzbekistan	TAS	Tashkent.
3	Vanuatu	VLI	Port Vila.
4	Vatican City	VCY	Vatican City State.
2	Venezuela	CCS	Caracas.
3	Vietnam	SGN	Ho Chi Minh Ville.
3	Wallis and Futuna Islands [1]		
3	Western Samoa	APW	Apia.
4	Yemen	SAH	Sanaa.
4	Zambia	NLA	Ndola.
4	Zimbabwe	HRE	Harare

[1] Direct country sacks are not made to these destinations. Prepare direct country packages (10 or more pieces) and include in mixed direct country package sacks labeled to the assigned U.S. exchange office listed in Exhibit 284.622.

[2] At the mailer's option, a finer sortation for IPA items addressed to Australia may be used. If this option is chosen, items addressed with postal codes beginning with 0, 1, 2, 4, and 9 and uncoded mail should be sorted and packaged to Sydney. Direct country sacks should be tagged to Sydney as well. Both the three-letter exchange office code, ''SYD,'' and the country name, Australia, should be entered in the ''TO'' block of Tag 178. Items addressed with postal codes beginning with 3, 5, 6, 7, and 8 should be sorted and packaged to Melbourne. Direct country sacks should be tagged to Melbourne as well. Both the three-letter exchange office code, ''MEL,'' and the country name, Australia, should be entered in the ''TO'' block of Tag 178.

[3] Netherlands Antilles includes Bonaire, Curacao, Saba, St. Eustatius, and St. Maarten.

EXHIBIT 284.523.—MEXICO

State group	State name	State abbreviation	Package label (facing slip) Line 1	Tag 116 3-letter exchange office code
1	Aguascalientes	AGS	20001 Aguascalientes AGS DIS	GDL
	Colima	COL	28001 Colima COL DIS	GDL
	Guanajuato	GTO	36501 Irapuato GTO DIS	GDL
	Jalisco	JAL	CPA Occidente Guadalajara DIS	GDL
	Nayarit	NAY	63001 Tepic NAY DIS	GDL
	Zacatecas	ZAC	98001 Zacatecas ZAC DIS	GDL
	Remaining	CPA	Occidente Guadalajara DIS	GDL
2	Campeche	CAM	24001 Campeche CAM DIS	MID
	Tabasco	TAB	86001 Villahermosa TAB DIS	MID
	Yucatan	YUC	97001 Merida YUC DIS	MID
	Remaining		97001 Merida YUC DIS	MID
3	Coahuila	COAH	CPA Noreste Monterrey NL DIS	MTY
	Nuevo Leon	NL	CPA Noreste Monterrey NL DIS	MTY
	San Luis Potosi	SLP	78001 San Luis Potosi SPL DIS	MTY
	Tamulipas	TAM	87001 DC Victoria TAM DIS	MTY
	Remaining	CPA	Noreste Monterrey NL DIS	MTY
4	Chiapas	CHIS	29002 Tuxtla Gtz CHIS DIS	MEX
	Hidalgo	HGO	42001 Pachuca HGO DIS	MEX
	Mexico	MEX	Mexico 506 DF DIS	MEX
	Michoacan	MICH	58001 Morelia MICH DIS	MEX
	Morelos	MOR	62001 Cuernavaca MOR DIS	MEX
	Oaxaca	OAX	68001 Oaxaca OAX DIS	MEX
	Puebla	PUE	72001 Puebla PUE DIS	MEX
	Queretaro	QRO	76001 Queretaro QRO DIS	MEX
	Quintana Roo	QROO	77001 Chetumal QROO DIS	MEX
	Tlaxcala	TLAX	90001 Tlaxcala TLAX DIS MEX.	
	Veracruz	VER	91701 Veracruz VER DIS MEX.	
	Remaining Mexico	506 DF DIS	MEX.	
5	Durango	DGO	82001 Mazatlan SIN DIS	MZT
	Sinaloa	SIN	82001 Mazatlan SIN DIS	MZT

EXHIBIT 284.523.—MEXICO—Continued

State group	State name	State abbreviation	Package label (facing slip) Line 1	Tag 116 3-letter exchange office code
	Remaining 82001	SIN DIS	Mazatlan	MZT
6	Distrito Federal	DF	Mexico 506 DF (Mexico City)	MEX
7	Guerrero	GRO	39301 Acapulco de Juarez GRO DIS	ACA
8	Baja Calif Norte	BCN	22001 Tijuana BCN DIS	N/A
	Baja Calif Sur	BCS 23001 La Paz BCS DIS	N/A.	
	Chihuahua	CHIH	32001 CD Juarez CHIH DIS	N/A
	Sonora	SON	84001 Nogales SON DIS	N/A

EXHIBIT 284.622 Labeling of IPA Mail to USPS Exchange Offices

IPA Acceptance Office 3-Digit ZIP Code Prefix	U.S. Exchange Office and Routing Code for Line 1
004–005, 010–098, 100–199, 250–267	AMC KENNEDY NY 003
200–249, 254, 268, 283–285, 400–418, 420–427, 476–477	P&DC DULLES VA 201
270–282, 286–326, 344, 350–397, 399	AMC ATLANTA GA 300
424, 430–459, 460–516, 520–528, 530–532, 534–535, 537–567, 570–588, 600–620, 622–631, 633–641, 644–658, 660–662, 664–681, 683–693, 739.	AMC O'HARE 606
700–708, 710–738, 740–799, 885	ISC DALLAS TX 753
590–599, 821, 832–838, 970–986, 988–999	AMC SEATTLE WA 980
850, 852–853, 855–857, 859–860, 863–865, 870–875, 877–884, 889–891, 900–908, 910–928, 930–936.	AMC LOS ANGELES CA 900
800–816, 820, 822–831, 840–847, 893–898, 937–966	AMC SAN FRANCISCO CA 940
967–969	P&DC HONOLULU 967

Stanley F. Mires,

Chief Counsel, Legislative.

[FR Doc. 99–5264 Filed 3–2–99; 8:45 am]

BILLING CODE 7710–12–P

ENVIRONMENTAL PROTECTION AGENCY

40 CFR Part 180

[OPP–300794; FRL–6062–4]

RIN 2070–AB78

Pyriproxyfen; Pesticide Tolerances for Emergency Exemptions

AGENCY: Environmental Protection Agency (EPA).

ACTION: Final rule.

SUMMARY: This regulation establishes time-limited tolerances for residues of pyriproxyfen in or on almond nutmeats and hulls, and stone fruits (Crop Group 12, see 40 CFR 180.41). This action is in response to EPA's granting of emergency exemptions under section 18 of the Federal Insecticide, Fungicide, and Rodenticide Act authorizing use of the pesticide on almonds and stone fruits. This regulation establishes maximum permissible levels for residues of pyriproxyfen in these food commodities pursuant to section 408(l)(6) of the Federal Food, Drug, and Cosmetic Act, as amended by the Food Quality Protection Act of 1996. The tolerances for almond nut meats and hulls will expire and are revoked on April 30, 2002. The tolerance for stone fruits will expire and is revoked on August 31, 2000. This document will remove a second section (§ 180.534) published in the **Federal Register** on July 6, 1998 (63 FR 36366) which subsequently added pyriproxifen as a permanent tolerance on cotton seed and cotton gin byproducts.

DATES: This regulation is effective March 3, 1999. Objections and requests for hearings must be received by EPA on or before May 3, 1999.

ADDRESSES: Written objections and hearing requests, identified by the docket control number [OPP–300794], must be submitted to: Hearing Clerk (1900), Environmental Protection Agency, Rm. M3708, 401 M St., SW., Washington, DC 20460. Fees accompanying objections and hearing requests shall be labeled ''Tolerance Petition Fees'' and forwarded to: EPA Headquarters Accounting Operations Branch, OPP (Tolerance Fees), P.O. Box 360277M, Pittsburgh, PA 15251. A copy of any objections and hearing requests filed with the Hearing Clerk identified by the docket control number, [OPP–300794], must also be submitted to: Public Information and Records Integrity Branch, Information Resources and Services Division (7502C), Office of Pesticide Programs, Environmental Protection Agency, 401 M St., SW., Washington, DC 20460. In person, bring a copy of objections and hearing requests to Rm. 119, Crystal Mall #2, 1921 Jefferson Davis Hwy., Arlington, VA.

A copy of objections and hearing requests filed with the Hearing Clerk may also be submitted electronically by sending electronic mail (e-mail) to: opp-docket@epa.gov. Copies of electronic objections and hearing requests must be submitted as an ASCII file avoiding the use of special characters and any form of encryption. Copies of objections and hearing requests will also be accepted on disks in WordPerfect 5.1/6.1 or ASCII file format. All copies of electronic objections and hearing requests must be identified by the docket control number [OPP–300794]. No Confidential Business Information (CBI) should be submitted through e-mail. Copies of electronic objections and hearing requests on this rule may be filed online at many Federal Depository Libraries.

FOR FURTHER INFORMATION CONTACT: For pyriproxyfen on almonds: Andrea Beard, (703)308-9356, beard.andrea@epa.gov; for pyriproxyfen on stone fruits: Andrew Ertman,

(703)308-9367, ertman.andrew@epa.gov; Office location (both): Crystal Mall #2, 1921 Jefferson Davis Hwy., Arlington, VA. Mailing address (both) Registration Division (7505C), Office of Pesticide Programs, Environmental Protection Agency, 401 M St., SW., Washington, DC 20460.

SUPPLEMENTARY INFORMATION: EPA, on its own initiative, pursuant to sections 408 and (l)(6) of the Federal Food, Drug, and Cosmetic Act (FFDCA), 21 U.S.C. 346a and (l)(6), is establishing tolerances for residues of the insect growth regulator pyriproxyfen, in or on almond nutmeats and hulls at 0.02 and 2.0 parts per million (ppm), respectively, and in or on stone fruits at 0.1 ppm. The tolerances for almond nut meats and hulls will expire and are revoked on April 30, 2002. The tolerance for stone fruits will expire and is revoked on August 31, 2000. EPA will publish a document in the **Federal Register** to remove the revoked tolerances from the Code of Federal Regulations.

EPA published in the **Federal Register** on July 25, 1997 (62 FR 39962) (FRL–5731–9) a time-limited tolerance for residues of pyriproxifen in or on cotton seed and cotton gin byproducts (40 CFR 180.510). Subsequently, on July 6, 1998 (63 FR 36366) (FRL–5794–6), EPA issued a permanent tolerance for pyriproxyfen on cotton seed and cotton gin byproducts in response to a petition by Valent U.S.A. Corporation (40 CFR 180.534). Through oversight, tolerances have been established for residues of pyriproxyfen on cotton seed and cotton gin byproducts in two different sections of 40 CFR part 180. EPA is revising § 180.510 to add the permanent tolerance of § 180.534(a) and will remove § 180.534.

I. Background and Statutory Findings

The Food Quality Protection Act of 1996 (FQPA) (Pub. L. 104–170) was signed into law August 3, 1996. FQPA amends both the Federal Food, Drug, and Cosmetic Act (FFDCA), 21 U.S.C. 301 *et seq.*, and the Federal Insecticide, Fungicide, and Rodenticide Act (FIFRA), 7 U.S.C. 136 *et seq*. The FQPA amendments went into effect immediately. Among other things, FQPA amends FFDCA to bring all EPA pesticide tolerance-setting activities under a new section 408 with a new safety standard and new procedures. These activities are described in this preamble and discussed in greater detail in the final rule establishing the time-limited tolerance associated with the emergency exemption for use of propiconazole on sorghum (61 FR 58135, November 13, 1996) (FRL–5572–9).

New section 408(b)(2)(A)(i) of the FFDCA allows EPA to establish a tolerance (the legal limit for a pesticide chemical residue in or on a food) only if EPA determines that the tolerance is ''safe.'' Section 408(b)(2)(A)(ii) defines ''safe'' to mean that ''there is a reasonable certainty that no harm will result from aggregate exposure to the pesticide chemical residue, including all anticipated dietary exposures and all other exposures for which there is reliable information.'' This includes exposure through drinking water and in residential settings, but does not include occupational exposure. Section 408(b)(2)(C) requires EPA to give special consideration to exposure of infants and children to the pesticide chemical residue in establishing a tolerance and to ''ensure that there is a reasonable certainty that no harm will result to infants and children from aggregate exposure to the pesticide chemical residue. . . .''

Section 18 of FIFRA authorizes EPA to exempt any Federal or State agency from any provision of FIFRA, if EPA determines that ''emergency conditions exist which require such exemption.'' This provision was not amended by FQPA. EPA has established regulations governing such emergency exemptions in 40 CFR part 166.

Section 408(l)(6) of the FFDCA requires EPA to establish a time-limited tolerance or exemption from the requirement for a tolerance for pesticide chemical residues in food that will result from the use of a pesticide under an emergency exemption granted by EPA under section 18 of FIFRA. Such tolerances can be established without providing notice or period for public comment.

Because decisions on section 18-related tolerances must proceed before EPA reaches closure on several policy issues relating to interpretation and implementation of the FQPA, EPA does not intend for its actions on such tolerances to set binding precedents for the application of section 408 and the new safety standard to other tolerances and exemptions.

II. Emergency Exemption for Pyriproxyfen on Almonds and Stone Fruits and FFDCA Tolerances

Almonds: The situation involving the discovery of Red Imported Fire Ant (RIFA) mounds in California almond orchards is urgent and non-routine, as this is a new pest which may become a serious economic pest as well as a public health pest in California, if its spread is not checked at this point. The Applicant states that a RIFA infestation could cause significant economic impacts to the affected growers, as well as other agricultural and non-agricultural interests for years to come. There are significant potential long-term losses, as well as the adverse impacts to other growers and entities, should RIFA infestations become established in the area

Stone Fruits: California has requested the use of pyriproxyfen due to the development of organophosphate-resistant San Jose scale populations. According to the Applicant, decades of organophosphate and carbamate insecticide usage, with no alternative modes of action have led to a build-up of these resistant populations. Individual orchards are now experiencing significant yield losses despite multiple insecticide applications. There are currently no insecticides registered for San Jose scale control in stone fruits which do not use acetyl-cholinesterase inhibition as their mode of action. Once a scale population takes over an orchard, it is difficult to bring it under control. Heavy infestations kill off branches and reduce yields. EPA has authorized under FIFRA section 18 the use of pyriproxyfen on almonds and stone fruits for control of Red Imported Fire Ants, and Resistant San Jose Scale, respectively in California. After having reviewed the submission, EPA concurs that emergency conditions exist for this state.

As part of its assessment of these emergency exemptions, EPA assessed the potential risks presented by residues of pyriproxyfen in or on almond nutmeats and hulls, and stone fruits. In doing so, EPA considered the safety standard in FFDCA section 408(b)(2), and EPA decided that the necessary tolerances under FFDCA section 408(l)(6) would be consistent with the safety standard and with FIFRA section 18. Consistent with the need to move quickly on the emergency exemption in order to address an urgent non-routine situation and to ensure that the resulting food is safe and lawful, EPA is issuing these tolerances without notice and opportunity for public comment under section 408(e), as provided in section 408(l)(6). Although the tolerance for stone fruit will expire and is revoked on August 31, 2000, and the tolerances for almond commodities will expire and are revoked on April 30, 2002, under FFDCA section 408(l)(5), residues of the pesticide not in excess of the amounts specified in the tolerances remaining in or on almond nutmeats and hulls, or stone fruits after these dates will not be unlawful, provided the pesticide is

applied in a manner that was lawful under FIFRA, and the residues do not exceed levels that were authorized by these tolerances at the time of that application. EPA will take action to revoke these tolerances earlier if any experience with, scientific data on, or other relevant information on this pesticide indicate that the residues are not safe.

Because these tolerances are being approved under emergency conditions EPA has not made any decisions about whether pyriproxyfen meets EPA's registration requirements for use on almonds and stone fruits or whether permanent tolerances for this use would be appropriate. Under these circumstances, EPA does not believe that these tolerance serve as a basis for registration of pyriproxyfen by a State for special local needs under FIFRA section 24(c). Nor does this tolerance serve as the basis for any State other than California to use this pesticide on these crops under section 18 of FIFRA without following all provisions of EPA's regulations implementing section 18 as identified in 40 CFR part 166. For additional information regarding the emergency exemptions for pyriproxyfen, contact the Agency's Registration Division at the address provided under the **ADDRESSES** section.

III. Aggregate Risk Assessment and Determination of Safety

EPA performs a number of analyses to determine the risks from aggregate exposure to pesticide residues. For further discussion of the regulatory requirements of section 408 and a complete description of the risk assessment process, see the final rule on Bifenthrin Pesticide Tolerances (62 FR 62961, November 26, 1997) (FRL–5754–7) .

Consistent with section 408(b)(2)(D), EPA has reviewed the available scientific data and other relevant information in support of this action. EPA has sufficient data to assess the hazards of pyriproxyfen and to make a determination on aggregate exposure, consistent with section 408(b)(2), for time-limited tolerances for residues of pyriproxyfen on almond nutmeats and hulls, and stone fruits at 0.02, 2.0, and 0.1 ppm, respectively. EPA's assessment of the dietary exposures and risks associated with establishing the tolerances follows.

A. Toxicological Profile

EPA has evaluated the available toxicity data and considered its validity, completeness, and reliability as well as the relationship of the results of the studies to human risk. EPA has also considered available information concerning the variability of the sensitivities of major identifiable subgroups of consumers, including infants and children. The nature of the toxic effects caused by pyriproxyfen are discussed in this unit.

B. Toxicological Endpoint

1. *Acute toxicity*. There are no acute dietary endpoints of concern for pyriproxyfen. No concern exists for acute dietary exposure to pyriproxyfen residues.

2. *Short - and intermediate - term toxicity.* There are no endpoints and no concern exists for short- or intermediate-term toxicity from pyriproxyfen.

3. *Chronic toxicity*. EPA has established the Reference Dose (RfD) for pyriproxyfen at 0.35 milligrams/kilogram/day (mg/kg/day). This RfD is based on 2-year and 90-day feeding studies in rats with a NOEL of 35.1 mg/kg/day and an uncertainty factor of 100, based on intra- and interspecies differences. At the LOEL of 141 mg/kg/day, there was a decrease in body weight gain in females.

4. *Carcinogenicity*. Pyriproxyfen has been classified in Group E of EPA's cancer classification system, indicating there is evidence of non-carcinogenicity for humans. Therefore, there is no concern for cancer risk from exposure to pyriproxyfen.

C. Exposures and Risks

1. *From food and feed uses.* Time-limited tolerances have been established (40 CFR 180.510) for the residues of pyriproxyfen, in or on tomatoes, pears, and citrus commodities, in association with use under emergency exemptions. Permanent tolerances were recently established for cotton commodities (July 6, 1998, 63 FR 36366). Risk assessments were conducted by EPA to assess dietary exposures and risks from pyriproxyfen as follows:

i. *Acute exposure and risk.* Acute dietary risk assessments are performed for a food-use pesticide if a toxicological study has indicated the possibility of an effect of concern occurring as a result of a 1-day or single exposure. An acute dietary dose and endpoint was not identified in the database. The Agency concludes that there is a reasonable certainty of no harm from acute dietary exposure.

ii. *Chronic exposure and risk.* As stated above, tolerances for cotton commodities were recently established, and there are time-limited tolerances established in connection with use under emergency exemptions for citrus commodities, pears, and tomatoes. The chronic dietary (food only) risk assessment used tolerance level residues and assumed 100% crop treated. The Novigen Dietary Exposure Evaluation Model (DEEM) analysis was used and this analysis evaluates individual food consumption as reported by respondents in the USDA Continuing Surveys of Food Intake by Individuals conducted in 1989 through 1992. The model accumulates exposure to the chemical for each commodity and expresses risk as a function of dietary exposure. Resulting exposure values (at the 99th percentile) and percentage of the acute RfD are given below. Values for the 99th percentile are considered to be conservative as OPP policy dictates exposure estimates from as low as the 95th percentile may be utilized for risk estimates from DEEM runs. Thus, these results are viewed as conservative estimates, and refinement using anticipated residue values and percent crop treated information, would result in lower estimates of acute dietary exposure and risk. For chronic dietary (food only) risk estimates, the two most highly exposed subgroups, Children (1-6 years old) and Children (1-7 years old) had 1.9 and 1.2% of the RfD utilized, respectively. All other population subgroups had less than 1% of the RfD utilized, except for Non-hispanic other than black or white, which had 1.1% of the RfD utilized.

2. *From drinking water.* Tier II drinking water assessment of pyriproxyfen was conducted, using computer models which simulate the fate in a surface water body. The estimated environmental concentrations (EECs) are generated for high exposure agricultural scenarios and represent one in ten years EECs in a stagnant pond with no outlet that receives pesticide loading from an adjacent 100% cropped, 100% treated field. As such, these computer generated EECs represent conservative screening levels for ponds and lakes and are used only for screening. The EECs for surface water ranged from a peak of 0.677 part per billion (ppb), to a 60-day average of 0.142 ppb, to a 1-year average of 0.103 ppb. These estimates are based on 2 applications at a rate of 0.11 lb. active ingredient per acre. For ground water, a computer model was used which resulted in estimated 60-day average concentrations of pyriproxyfen of 0.006 ppb.

i. *Acute exposure and risk.* An acute dietary dose and endpoint was not identified in the database. The Agency concludes that there is a reasonable certainty of no harm from acute exposure through drinking water.

ii. *Chronic exposure and risk.* A human health drinking water level of comparison (DWLOC) is the concentration in drinking water that would be acceptable as an upper limit in light of total aggregate exposure to that chemical from food, water, and non-occupational (residential) sources. The DWLOC for chronic risk is the concentration in drinking water as a part of the aggregate chronic exposure, that occupies no more than 100% of the RfD. In conducting these calculations, default body weights are used of 70 kg (adult male), 60 kg (adult female) and 10 kg (child); default consumption values of water are used of 2L per day for adults and 1L per day for children. Using these assumptions and the levels provided by the computer models, given above, the DWLOCs were calculated to be 12,168 and 3,436 ppb, for the Overall U.S. population, and Children (1-6 Yrs. old), respectively. Since these levels are very significantly higher than the EECs calculated above, EPA concludes that there is reasonable certainty of no harm if these tolerances are established.

3. *From non-dietary exposure.* Pyriproxyfen is currently registered for use on the following residential non-food sites: products for flea and tick control, including foggers, aerosol sprays, emulsifiable concentrates, and impregnated material (pet collars).

i. *Acute exposure and risk.* An acute endpoint was not identified in the database. The Agency concludes that there is a reasonable certainty of no harm from acute residential non-food exposure.

ii. *Chronic exposure and risk.* With the exception of the pet collar use, consumer use of these residential-use products typically results in short-term, intermittent exposures. Hence, chronic residential exposure and risk assessments were conducted to estimate the potential risks from pet collar uses only. The estimated chronic term Margins of Exposure (MOEs) was 230,000 for children, and 430,000 for adults, which indicates that potential risks from pet collar uses do not exceed levels of concern. (An MOE of 100 or more is generally considered to be of no concern.)

iii. *Short- and intermediate-term exposure and risk.* There are no endpoints and no concern exists for short- or intermediate-term toxicity from pyriproxyfen.

4. *Cumulative exposure to substances with common mechanism of toxicity.* Section 408(b)(2)(D)(v) requires that, when considering whether to establish, modify, or revoke a tolerance, the Agency consider ''available information'' concerning the cumulative effects of a particular pesticide's residues and ''other substances that have a common mechanism of toxicity.''

EPA does not have, at this time, available data to determine whether pyriproxyfen has a common mechanism of toxicity with other substances or how to include this pesticide in a cumulative risk assessment. Unlike other pesticides for which EPA has followed a cumulative risk approach based on a common mechanism of toxicity, pyriproxyfen does not appear to produce a toxic metabolite produced by other substances. For the purposes of this tolerance action, therefore, EPA has not assumed that pyriproxyfen has a common mechanism of toxicity with other substances. For more information regarding EPA's efforts to determine which chemicals have a common mechanism of toxicity and to evaluate the cumulative effects of such chemicals, see the final rule for Bifenthrin Pesticide Tolerances (62 FR 62961, November 26, 1997).

D. Aggregate Risks and Determination of Safety for U.S. Population

1. *Acute risk.* There are no acute endpoints of concern for pyriproxyfen. No concern exists for acute exposure to pyriproxyfen residues.

2. *Chronic risk.* Using the TMRC exposure assumptions described in this unit, EPA has concluded that aggregate exposure to pyriproxyfen from food will utilize 0.7%, respectively of the RfD for the U.S. population. The major identifiable subgroup with the highest aggregate exposure is Children (1 - 6 years old with 1.9% of the RfD utilized by food. This is discussed further below. EPA generally has no concern for exposures below 100% of the RfD because the RfD represents the level at or below which daily aggregate dietary exposure over a lifetime will not pose appreciable risks to human health. Despite the potential for exposure to pyriproxyfen in drinking water and from non-dietary, non-occupational exposure, EPA does not expect the aggregate exposure to exceed 100% of the RfD.

3. *Short- and intermediate-term risk.* Short- and intermediate-term aggregate exposure takes into account chronic dietary food and water (considered to be a background exposure level) plus indoor and outdoor residential exposure.

There are no endpoints and no concern exists for short- or intermediate-term toxicity from pyriproxyfen.

4. *Aggregate cancer risk for U.S. population.* Pyriproxyfen has been classified in Group E of EPA's cancer classification system, indicating there is evidence of non-carcinogenicity for humans. Therefore, there is no concern for cancer risk from exposure to pyriproxyfen.

5. *Determination of safety.* Based on these risk assessments, EPA concludes that there is a reasonable certainty that no harm will result from aggregate exposure to pyriproxyfen residues.

E. Aggregate Risks and Determination of Safety for Infants and Children

1. *Safety factor for infants and children*— i. *In general.* In assessing the potential for additional sensitivity of infants and children to residues of pyriproxyfen, EPA considered data from developmental toxicity studies in the rat and rabbit and a 2-generation reproduction study in the rat. The developmental toxicity studies are designed to evaluate adverse effects on the developing organism resulting from maternal pesticide exposure during gestation. Reproduction studies provide information relating to effects from exposure to the pesticide on the reproductive capability of mating animals and data on systemic toxicity.

FFDCA section 408 provides that EPA shall apply an additional tenfold margin of safety for infants and children in the case of threshold effects to account for pre-and post-natal toxicity and the completeness of the database unless EPA determines that a different margin of safety will be safe for infants and children. Margins of safety are incorporated into EPA risk assessments either directly through use of a margin of exposure (MOE) analysis or through using uncertainty (safety) factors in calculating a dose level that poses no appreciable risk to humans. EPA believes that reliable data support using the standard MOE and uncertainty factor (usually 100 for combined inter- and intra-species variability) and not the additional tenfold MOE/uncertainty factor when EPA has a complete data base under existing guidelines and when the severity of the effect in infants or children or the potency or unusual toxic properties of a compound do not raise concerns regarding the adequacy of the standard MOE/safety factor.

ii. *Developmental toxicity studies.* In the developmental study in rats, the maternal (systemic) NOEL was 100 mg/kg/day, based on decreased bodyweight, body weight gain, food consumption, and increased water consumption at the LOEL of 300 mg/kg/day. The developmental (fetal) NOEL was 300 mg/kg/day, based on increased skeletal variations and unspecified visceral variations at the LOEL of 1000 mg/kg/day.

In the developmental toxicity study in rabbits, the maternal (systemic) NOEL was 100 mg/kg/day, based on abortions, soft stools, emaciation, decreased activity, and bradypnea at the LOEL of 300 mg/kg/day. The developmental (pup) NOEL was 300 mg/kg/day, based on decreased viable litters available for examination at the LOEL of 1000 mg/kg/day.

iii. *Reproductive toxicity study*. In the 2-generation reproductive toxicity study in rats, the maternal (systemic) NOEL was 87/96 mg/kg/day for Males/Females, based on decreased body weights, body weight gains, and increased liver weight associated with histopathological findings in the liver at the LOEL of 453/498 mg/kg/day for M/F. The developmental (pup) NOEL was 87/96 mg/kg/day, based on decreased body weight on lactation days 14 and 21 at the LOEL of 453/498 mg/kg/day. The reproductive NOEL was 453/498 mg/kg/day for M/F (the highest dose tested).

iv. *Pre- and post-natal sensitivity*. In both rats and rabbits, developmental studies demonstrated that the developmental findings occurred at dose levels at which maternal toxicity was also present, demonstrating no special pre-natal sensitivity for developing fetuses. In the post-natal evaluation to infants and children, as shown in the results of the rat reproduction study, the NOEL and LOEL for both parental systemic toxicity and pup toxicity occurred at the same dose levels, demonstrating no special post-natal sensitivity for infants and children.

v. *Conclusion*. Given the fact that there is a complete toxicity data base for pyriproxyfen, and no special pre- or post- natal sensitivities are indicated for infants and children, an additional 10-fold safety factor is not warranted. EPA concludes that there is reasonable certainty of safety for infants and children exposed to dietary residues of pyriproxyfen.

2. *Acute risk*. There are no acute dietary endpoints of concern for pyriproxyfen. No concern exists for acute dietary exposure to pyriproxyfen residues.

3. *Chronic risk*. Using the conservative exposure assumptions described in this unit, EPA has concluded that aggregate exposure to pyriproxyfen from food will utilize 1.9% of the RfD for the most highly exposed infant and children population subgroup, Children (1 - 6 years old). EPA generally has no concern for exposures below 100% of the RfD because the RfD represents the level at or below which daily aggregate dietary exposure over a lifetime will not pose appreciable risks to human health. The risk from drinking water is conservatively estimated to utilize 0.35% of the RfD for infants and children, as discussed above. Despite the potential for exposure to pyriproxyfen in drinking water and from non-dietary, non-occupational exposure, EPA does not expect the aggregate exposure to exceed 100% of the RfD. EPA concludes that there is a reasonable certainty that no harm will result to infants and children from aggregate exposure to pyriproxyfen residues.

4. *Short- or intermediate-term risk*. There are no endpoints and no concern exists for short- or intermediate-term toxicity from pyriproxyfen.

5. *Determination of safety*. Based on these risk assessments, EPA concludes that there is a reasonable certainty that no harm will result to infants and children from aggregate exposure to pyriproxyfen residues.

IV. Other Considerations

A. Metabolism In Plants and Animals

For the purposes of these uses under section 18, the nature of the residue in plants is adequately understood, and the residue to be regulated is parent pyriproxyfen per se [4-phenoxyphenyl (RS)-2-(2-pyridyloxy)propyl ether. There are no detectable residues expected in animal commodities as a result of these uses.

B. Analytical Enforcement Methodology

Adequate analytical methodology is available to enforce the tolerance expression, in residue analytical method RM-33P-2 using gas chromatography with a nitrogen-phosphorus detector. This has been validated by EPA and may be requested from: Calvin Furlow, PRRIB, IRSD (7502C), Office of Pesticide Programs, Environmental Protection Agency, 401 M St., SW., Washington, DC 20460. Office location and telephone number: Rm 101FF, Crystal Mall #2, 1921 Jefferson Davis Hwy., Arlington, VA, (703) 305-5229.

C. Magnitude of Residues

Residues of pyriproxyfen are not expected to exceed 0.02 ppm in/on almond nutmeat, 2.0 ppm in/on almond hulls, and 0.1 ppm in/on stone fruits; no detectable residues are expected to occur in animal commodities, as a result of these emergency exemption uses.

D. International Residue Limits

There are no Canadian, Mexican, or Codex maximum residue limits (MRLs) for residues of pyriproxyfen in/on almond nutmeats or hulls, or stone fruits.

E. Rotational Crop Restrictions

There are no applicable rotational crop restrictions for these emergency exemption uses.

V. Conclusion

Therefore, the tolerances are established for residues of pyriproxyfen in almond nutmeats and hulls at 0.02 and 2.0 ppm, respectively, and on stone fruits at 0.1 ppm.

VI. Objections and Hearing Requests

The new FFDCA section 408(g) provides essentially the same process for persons to ''object'' to a tolerance regulation as was provided in the old section 408 and in section 409. However, the period for filing objections is 60 days, rather than 30 days. EPA currently has procedural regulations which govern the submission of objections and hearing requests. These regulations will require some modification to reflect the new law. However, until those modifications can be made, EPA will continue to use those procedural regulations with appropriate adjustments to reflect the new law.

Any person may, by May 3, 1999, file written objections to any aspect of this regulation and may also request a hearing on those objections. Objections and hearing requests must be filed with the Hearing Clerk, at the address given under the ''ADDRESSES'' section (40 CFR 178.20). A copy of the objections and/or hearing requests filed with the Hearing Clerk should be submitted to the OPP docket for this rulemaking. The objections submitted must specify the provisions of the regulation deemed objectionable and the grounds for the objections (40 CFR 178.25). Each objection must be accompanied by the fee prescribed by 40 CFR 180.33(i). EPA is authorized to waive any fee requirement ''when in the judgement of the Administrator such a waiver or refund is equitable and not contrary to the purpose of this subsection. For additional information regarding tolerance objection fee waivers, contact James Tompkins, Registration Division (7505C), Office of Pesticide Programs, Environmental Protection Agency, 401 M St., SW., Washington, DC 20460. Office location, telephone number, and e-mail address: Rm. 239, Crystal Mall #2, 1921 Jefferson Davis Hwy., Arlington, VA, (703) 305-5697, tompkins.jim@epa.gov. Requests for waiver of tolerance objection fees should be sent to James Hollins, Information Resources and Services Division (7502C), Office of Pesticide Programs, Environmental Protection

Agency, 401 M St., SW., Washington, DC 20460.

If a hearing is requested, the objections must include a statement of the factual issues on which a hearing is requested, the requestor's contentions on such issues, and a summary of any evidence relied upon by the requestor (40 CFR 178.27). A request for a hearing will be granted if the Administrator determines that the material submitted shows the following: There is genuine and substantial issue of fact; there is a reasonable possibility that available evidence identified by the requestor would, if established, resolve one or more of such issues in favor of the requestor, taking into account uncontested claims or facts to the contrary; and resolution of the factual issues in the manner sought by the requestor would be adequate to justify the action requested (40 CFR 178.32). Information submitted in connection with an objection or hearing request may be claimed confidential by marking any part or all of that information as CBI. Information so marked will not be disclosed except in accordance with procedures set forth in 40 CFR part 2. A copy of the information that does not contain CBI must be submitted for inclusion in the public record. Information not marked confidential may be disclosed publicly by EPA without prior notice.

VII. Public Record and Electronic Submissions

EPA has established a record for this regulation under docket control number [OPP–300794] (including any comments and data submitted electronically). A public version of this record, including printed, paper versions of electronic comments, which does not include any information claimed as CBI, is available for inspection from 8:30 a.m. to 4 p.m., Monday through Friday, excluding legal holidays. The public record is located in Room 119 of the Public Information and Records Integrity Branch, Information Resources and Services Division (7502C), Office of Pesticide Programs, Environmental Protection Agency, Crystal Mall #2, 1921 Jefferson Davis Hwy., Arlington, VA.

Objections and hearing requests may be sent by e-mail directly to EPA at:

opp-docket@epa.gov.

E-mailed objections and hearing requests must be submitted as an ASCII file avoiding the use of special characters and any form of encryption.

The official record for this regulation, as well as the public version, as described in this unit will be kept in paper form. Accordingly, EPA will transfer any copies of objections and hearing requests received electronically into printed, paper form as they are received and will place the paper copies in the official record which will also include all comments submitted directly in writing. The official record is the paper record maintained at the Virginia address in ''ADDRESSES'' at the beginning of this document.

VIII. Regulatory Assessment Requirements

A. Certain Acts and Executive Orders

This final rule establishes a tolerance under section 408 of the FFDCA. The Office of Management and Budget (OMB) has exempted these types of actions from review under Executive Order 12866, entitled *Regulatory Planning and Review* (58 FR 51735, October 4, 1993). This final rule does not contain any information collections subject to OMB approval under the Paperwork Reduction Act (PRA), 44 U.S.C. 3501 *et seq.*, or impose any enforceable duty or contain any unfunded mandate as described under Title II of the Unfunded Mandates Reform Act of 1995 (UMRA) (Pub. L. 104-4). Nor does it require any prior consultation as specified by Executive Order 12875, entitled *Enhancing the Intergovernmental Partnership* (58 FR 58093, October 28, 1993), or special considerations as required by Executive Order 12898, entitled *Federal Actions to Address Environmental Justice in Minority Populations and Low-Income Populations* (59 FR 7629, February 16, 1994), or require OMB review in accordance with Executive Order 13045, entitled *Protection of Children from Environmental Health Risks and Safety Risks* (62 FR 19885, April 23, 1997).

In addition, since tolerances and exemptions that are established on the basis of a petition under FFDCA section 408(l)(6), such as the tolerance in this final rule, do not require the issuance of a proposed rule, the requirements of the Regulatory Flexibility Act (RFA) (5 U.S.C. 601 *et seq.*) do not apply. Nevertheless, the Agency previously assessed whether establishing tolerances, exemptions from tolerances, raising tolerance levels or expanding exemptions might adversely impact small entities and concluded, as a generic matter, that there is no adverse economic impact. The factual basis for the Agency's generic certification for tolerance actions published on May 4, 1981 (46 FR 24950), and was provided to the Chief Counsel for Advocacy of the Small Business Administration.

B. Executive Order 12875

Under Executive Order 12875, entitled *Enhancing the Intergovernmental Partnership* (58 FR 58093, October 28, 1993), EPA may not issue a regulation that is not required by statute and that creates a mandate upon a State, local or tribal government, unless the Federal government provides the funds necessary to pay the direct compliance costs incurred by those governments. If the mandate is unfunded, EPA must provide to OMB a description of the extent of EPA's prior consultation with representatives of affected State, local, and tribal governments, the nature of their concerns, copies of any written communications from the governments, and a statement supporting the need to issue the regulation. In addition, Executive Order 12875 requires EPA to develop an effective process permitting elected officials and other representatives of State, local, and tribal governments ''to provide meaningful and timely input in the development of regulatory proposals containing significant unfunded mandates.''

Today's rule does not create an unfunded Federal mandate on State, local, or tribal governments. The rule does not impose any enforceable duties on these entities. Accordingly, the requirements of section 1(a) of Executive Order 12875 do not apply to this rule.

C. Executive Order 13084

Under Executive Order 13084, entitled *Consultation and Coordination with Indian Tribal Governments* (63 FR 27655, May 19, 1998), EPA may not issue a regulation that is not required by statute, that significantly or uniquely affects the communities of Indian tribal governments, and that imposes substantial direct compliance costs on those communities, unless the Federal government provides the funds necessary to pay the direct compliance costs incurred by the tribal governments. If the mandate is unfunded, EPA must provide OMB, in a separately identified section of the preamble to the rule, a description of the extent of EPA's prior consultation with representatives of affected tribal governments, a summary of the nature of their concerns, and a statement supporting the need to issue the regulation. In addition, Executive Order 13084 requires EPA to develop an effective process permitting elected officials and other representatives of Indian tribal governments ''to provide meaningful and timely input in the development of regulatory policies on

matters that significantly or uniquely affect their communities.''

Today's rule does not significantly or uniquely affect the communities of Indian tribal governments. This action does not involve or impose any requirements that affect Indian tribes. Accordingly, the requirements of section 3(b) of Executive Order 13084 do not apply to this rule.

IX. Submission to Congress and the Comptroller General

The Congressional Review Act, 5 U.S.C. 801 *et seq.*, as added by the Small Business Regulatory Enforcement Fairness Act of 1996, generally provides that before a rule may take effect, the Agency promulgating the rule must submit a rule report, which includes a copy of the rule, to each House of the Congress and the Comptroller General of the United States. EPA will submit a report containing this rule and other required information to the United States prior to publication of the rule in the **Federal Register**. This rule is not a ''major rule'' as defined by 5 U.S.C. 804(2).

List of Subjects in 40 CFR Part 180

Environmental protection, Administrative practice and procedure, Agricultural commodities, Pesticides and pests, Reporting and recordkeeping requirements.

Dated: February 11, 1999.

James Jones,

Director, Registration Division, Office of Pesticide Programs.

Therefore, 40 CFR chapter I is amended as follows:

PART 180—[AMENDED]

1. The authority citation for part 180 continues to read as follows:

Authority: 21 U.S.C. 346a and 371.

2. Section 180.510 is revised to read as follows:

§ 180.510 Pyriproxyfen; tolerances for residues.

(a) *General.* Tolerances are established for combined residues of the insecticide pyriproxyfen in or on the following agricultural commodities:

Commodity	Parts per million
Cotton, gin byproducts	2.0
Cottonseed	0.05

(b) *Section 18 emergency exemptions.* Time-limited tolerances are established for the residues of the insect growth regulator pyriproxyfen, in connection with the use of the pesticide under section 18 emergency exemptions granted by EPA. The tolerances will expire on the dates specified in the following table.

Commodity	Parts per million	Expiration/revocation date
Almond hulls	2.0	4/30/02
Almond nutmeats	0.02	4/30/02
Citrus fruit	0.3	7/31/99
Citrus juice	1.0	7/31/99
Citrus oil	300	7/31/99
Citrus pulp, dried	1.0	7/31/99
Pears	0.2	7/31/99
Stone fruits (Crop Group 12).	0.1	8/31/00
Tomatoes	0.1	7/31/99

(c) *Tolerances with regional registrations.* [Reserved]

(d) *Indirect or inadvertent residues.* [Reserved]

§ 180.534 [Removed]

3. Section 180.534 is removed.

[FR Doc. 99–4832 Filed 3–2–99; 8:45 am]

BILLING CODE 6560–50–F

ENVIRONMENTAL PROTECTION AGENCY

40 CFR Part 180

[OPP–300767A; FRL–6049–2]

Dicamba (3,6-dichloro-o-anisic acid); Pesticide Tolerance, Technical Correction

AGENCY: Environmental Protection Agency (EPA).

ACTION: Final rule, correction.

SUMMARY: This document makes a technical correction to the dicamba pesticide tolerance regulations that established, revised and revoked tolerances for use of the combined residues of dicamba on various raw agricultural commodities.

DATES: This technical correction is effective on March 3, 1999.

FOR FURTHER INFORMATION CONTACT: By mail: Joanne I. Miller, Registration Division (7505C), Office of Pesticide Programs, Environmental Protection Agency, 401 M St., SW., Washington, DC 20460. Office location, telephone number, and e-mail address: Crystal Mall #2, 1921 Jefferson Davis Hwy., Arlington, VA, (703) 305–6224, e-mail: miller.joanne@epamail.epa.gov.

SUPPLEMENTARY INFORMATION:

I. Background

In the **Federal Register** of November 20, 1998 (63 FR 64481)(FRL–6043–9), EPA issued a notice pursuant to section 408 of the Federal Food, Drug, and Cosmetic Act (FFDCA), 21 U.S.C. 346a(e) announcing the filing of pesticide petitions (PP 6F4604, 4F3041 and FAP 4H5428) for tolerances by BASF Corporation. This notice included a summary of the petitions prepared by BASF. There were no comments received in response to the notice of filing.

In the **Federal Register** of January 6, 1999 (64 FR 759)(FRL–6049–2) EPA issued a rule amending 40 CFR 180.227 by establishing, revising and revoking tolerances for combined residues of the herbicide dicamba (3,6-dichloro-*o*-anisic acid) and its metabolites 3,6-dichloro-5-hydroxy-*o*-anisic acid and 3,6-dichloro-2-hydroxybenzoic acid.

II. Why is this Technical Correction Issued as a Final Rule?

EPA is publishing this action as a final rule without prior notice and comment because the Agency believes that providing notice and comment is unnecessary and would be contrary to the public interest. As explained in Unit II of this preamble, the corrections contained in this action will correct errors in the preamble and the amendatory instructions to a previously published Final rule. EPA finds that there is ''good cause'' under section 553(b)(3)(B) of the Administrative Procedure Act (APA) (5 U.S.C. 553(b)(3)(B) to make this amendment without prior notice and comment.

III. Do Any of the Regulatory Assessment Requirements Apply to this Action?

No. This final rule does not impose any new requirements. It only implements a technical correction to the Code of Federal Regulations (CFR). As such, this action does not require review by the Office of Management and Budget (OMB) under Executive Order 12866, entitled *Regulatory Planning and Review* (58 FR 51735, October 4, 1993), the Paperwork Reduction Act (PRA), 44 U.S.C. 3501 *et seq.*, or Executive Order 13045, entitled *Protection of Children from Environmental Health Risks and Safety Risks* (62 FR 19885, April 23, 1997). This action does not impose any enforceable duty, contain any unfunded mandate, or impose any significant or unique impact on small governments as described in the Unfunded Mandates Reform Act of 1995 (UMRA) (Pub. L. 104–4). Nor does it require prior

consultation with State, local, and tribal government officials as specified by Executive Order 12875, entitled *Enhancing the Intergovernmental Partnership* (58 FR 58093, October 28, 1993) and Executive Order 13084, entitled *Consultation and Coordination with Indian Tribal Governments* (63 FR 27655, May 19,1998), or special consideration of environmental justice related issues under Executive Order 12898, entitled *Federal Actions to Address Environmental Justice in Minority Populations and Low-Income Populations* (59 FR 7629, February 16, 1994). This action does not involve any technical standards that would require Agency consideration of voluntary consensus standards pursuant to section 12(d) of the National Technology Transfer and Advancement Act of 1995 (NTTAA), Pub. L. 104–113, section 12(d) (15 U.S.C. 272 note). In addition, since this action is not subject to notice-and-comment requirements under the Administrative Procedure Act (APA) or any other statute, it is not subject to the regulatory flexibility provisions of the Regulatory Flexibility Act (RFA) (5 U.S.C. 601 *et seq*.).

IV. Will EPA Submit this Final Rule to Congress and the Comptroller General?

Yes. The Congressional Review Act, 5 U.S.C. 801 *et seq*., as added by the Small Business Regulatory Enforcement Fairness Act of 1996, generally provides that before a rule may take effect, the agency promulgating the rule must submit a rule report, which includes a copy of the rule, to each House of the Congress and to the Comptroller General of the United States. Section 808 allows the issuing agency to make a good cause finding that notice and public procedure is impracticable, unnecessary or contrary to the public interest. This determination must be supported by a brief statement. 5 U.S.C. 808(2). EPA has made such a good cause finding for this final rule, and established an effective date of March 3, 1999. Pursuant to 5 U.S.C 808(2), this determination is supported by the brief statement in Unit III of this document. EPA will submit a report containing this rule and other required information to the U.S. Senate, the U.S. House of Representatives, and the Comptroller General of the United States prior to publication of the rule in the **Federal Register**. This is not a ''major rule'' as defined by 5 U.S.C. 804(2).

List of Subjects in 40 CFR Part 180

Environmental protection, Administrative practice and procedure, Agriculatural commodities, Pesticides and pest, Reporting and recordkeeping requirements.

This technical amendment corrects an error in the preamble to the rule, the amendatory language instruction, and reformats one of the entries in the table to § 180.227 in the January 6, 1999 (FR doc. 99–109), decamba tolerance amendments. The corrections are:

1. On page 759, in the third column, the first full paragraph from the top of the page is corrected to read as follows:

''These petitions requested that 40 CFR 180.227 be amended by establishing, revising and revoking tolerances for combined residues of the herbicide dicamba (3,6-dichloro-*o*-anisic acid) and its metabolites 3,6-dichloro-5-hydroxy-*o*-anisic acid and 3,6-dichloro-2-hydroxybenzoic acid in or on the commodities listed in the summary of this Final Rule.''

2. On page 769, in the first column, in instruction 3., amendatory language item ''i.'' is revised to read as follows:

''i. In newly designated paragraph (a)(1), by revising the entries for the following commodities: barley, grain; barley, straw; wheat, grain; and wheat, straw; by adding alphabetically entries for barley, hay; corn, field, forage; corn, field, stover; corn, pop stover; cottonseed; cottonseed, meal; crop group 17 (grass, forage, fodder and hay); grass, forage; grass, hay; oat, forage; oats, hay; wheat, forage; and wheat, hay; and by removing the entries for asparagus; grasses, hay; grasses, pasture; and grasses, rangeland''.

3. In the second column, § 180.227, the table to paragraph (a)(1) is amended to correct the entry for ''Crop group 17 (grass, forage, fodder and hay); grass, forage; and grass, hay''.

Commodity	Parts per million
* * *	* *
Crop Group 17 (grass, forage, fodder and hay):.	
Grass, forage	125.0
Grass, hay	200.0
* * *	* *

Dated: February 19, 1999.

James Jones,

Director, Registration Division, Office of Pesticide Programs.

[FR Doc. 99–5103 Filed 3–2–99; 8:45 am]

BILLING CODE 6560–50–F

DEPARTMENT OF TRANSPORTATION

Surface Transportation Board

49 CFR Parts 1000 to 1199

Title 49 CFR Parts 1000 to 1199; Republication

CFR Correction

Title 49 CFR parts 1000 to 1199, revised as of October 1, 1998, is being republished. The earlier issuance contained incorrect text on page 265. As corrected, page 265 should include the last two lines of § 1180.1(f) and paragraphs (g) and (h). Also omitted was § 1180.2 introductory text and paragraphs (a) through (d)(2).

[FR Doc. 99–55509 Filed 2–2–99; 8:45 am]

BILLING CODE 1505–01–D

Proposed Rules

Federal Register
Vol. 64, No. 41
Wednesday, March 3, 1999

This section of the FEDERAL REGISTER contains notices to the public of the proposed issuance of rules and regulations. The purpose of these notices is to give interested persons an opportunity to participate in the rule making prior to the adoption of the final rules.

DEPARTMENT OF AGRICULTURE

Rural Housing Service

Rural Business-Cooperative Service

Rural Utilities Service

Farm Service Agency

7 CFR Parts 1823 and 1956

RIN 0560–AF43

Debt Forgiveness for Loans to Indian Tribes and Tribal Corporations

AGENCIES: Rural Housing Service, Rural Business-Cooperative Service, Rural Utilities Service, Farm Service Agency, USDA.

ACTION: Advance Notice of Proposed Rulemaking.

SUMMARY: The Farm Service Agency (FSA) is reviewing regulations and is considering revising its debt relief regulations for Indian Tribal Land Acquisition Program (ITLAP) loans. Current Agency regulations only provide limited debt relief authority for ITLAP loans. This review will assure the participation of interested parties to better balance program participants' needs and public concerns. The review will also serve to gather information and solicit comments on potential revisions to the regulations.

DATES: Comments on this advance notice of proposed rulemaking, including comments on alternatives to this proposal must be received on or before April 2, 1999 to be assured of consideration.

ADDRESSES: Interested persons are invited to submit written comments on this advance notice of proposed rulemaking to: Veldon Hall, Director, Farm Loan Programs, Loan Servicing Division, USDA/FSA/LSPMD/STOP 0523, 1400 Independence Avenue, SW, Washington, DC 20250–0523, telephone (202) 720–4572, fax (202) 690–0949 or (202) 720–7686; e-mail comments may be sent to: VHall@wdc.fsa.usda.gov

All written comments received in response to this advance notice will be available for public inspection in Room 5449 South Building, U.S. Department of Agriculture, 1400 Independence Avenue, SW, Washington, DC between 8:15 a.m. and 4:45 p.m., Monday through Friday, except holidays.

FOR FURTHER INFORMATION CONTACT: Gary M. West, telephone (202) 690–4008.

SUPPLEMENTARY INFORMATION:

Executive Order 12866

It has been determined that this advance notice is Significant under Executive Order 12866 and has been reviewed by OMB. Because of the preliminary nature of this notice, information is not yet available with which to prepare a Cost Benefit Assessment or a Civil Rights Analysis. The analyses will be completed and available when the proposed rule, if any, is prepared.

Executive Order 13084

On May 14, 1998, President Clinton issued Executive Order 13084 entitled ''Consultation and Coordination with Indian Tribal Governments.'' This Executive Order, which became effective on August 12, 1998, recognizes the unique legal relationship that exists between the Government of the United States and the Indian tribal governments and states that the ''United States continues to work with Indian tribes on a Government-to-Government basis to address issues concerning Indian tribal self-government, trust resources, and Indian tribal treaty and other rights.'' This Executive Order provides that Federal agencies must be flexible in reviewing requests for waivers of regulatory requirements in connection with programs administered by the agencies ''with a general view toward increasing opportunities for utilizing flexible policy approaches at the Indian tribal level in cases in which the proposed waiver is consistent with the applicable Federal policy objectives and is otherwise appropriate.'' It is the purpose of this Advance Notice of Proposed Rulemaking to consider different policies in connection with the ITLAP, particularly focusing on the possibility of relief from ITLAP debt obligations so that tribes with diminished resources can direct their revenue to other activities.

Background

Pub. L. 91–229 (25 U.S.C. 488–494) authorized the Secretary of Agriculture to establish the Indian Tribal Land Acquisition Program (ITLAP). This program was administered by the former Farmers Home Administration to make loans to Indian tribes to acquire land and fractional interests in land within the tribes' reservations. The program is now administered by the Farm Service Agency (FSA).

Regulations implementing this program for loan making are in 7 CFR part 1823, subpart N; for loan servicing, 7 CFR part 1951, subpart E; and for debt settlement, 7 CFR part 1956, subpart C.

At the present time 28 tribes have ITLAP loans with a total outstanding balance of approximately $71 million for all ITLAP loans. The regulations of the former Farmers Home Administration at § 1823.409, which are still in effect, authorize security for ITLAP loans to be either traditional mortgages or assignments of tribal income. In accordance with § 1823.406, loans under ITLAP may be made for a term not to exceed 40 years. Since the lands being purchased using ITLAP were often small, discontinuous tracts or were fractional undivided interests as a result of Indian heirship proceedings, the security for these loans has generally been an assignment of the tribe's income and a mortgage has not been taken. Normally the tribes rented the land purchased with ITLAP funds, often combined with other tribally owned land, for farming and ranching purposes. Rent from tribal operations is paid to the Bureau of Indian Affairs (BIA) and is held in a tribal account along with other tribal funds. The annual payments on the ITLAP loans were automatically made by the BIA from income held by the BIA in tribal accounts. In many cases, the annual ITLAP loan payments exceed the rental income from the lands purchased with ITLAP funds. The automatic nature of the payments prevents the tribes from defaulting on the ITLAP loans and using these funds for other tribal purposes.

Because of the assignment of income payment mechanism, ITLAP loans have generally remained current, even through the agricultural financial crisis of the 1980's, assistance to the tribes has decreased, making it more difficult for the tribes to meet all of their tribal commitments and simultaneously have

full loan payments automatically made to FSA by BIA from the assignments of reduced tribal income. One increased tribal expense involves the responsibility which the tribes have been given for waste management on reservations. Additionally, welfare reform under the Personal Responsibility and Work Opportunity Reconciliation Act of 1996, Pub. L. 104–193, will decrease welfare assistance to tribal members, causing tribal governments to provide additional resources to individual tribal members to make up for the decrease. In many cases, unemployment on reservations with ITLAP loans is 85 to 90 percent and there are no viable employment opportunities within the reservation or nearby communities; therefore, the tribal government will have to assume more responsibility for subsistence payments for its members. In addition, past reduction in funds appropriated to the BIA for Tribal Priority Allocations, *i.e.*, public safety, fire protection, road maintenance, education, health care, and other infrastructure requirements, are causing further financial difficulties for tribes in meeting their responsibilities to their members.

Legal Background for ITLAP Debt Relief

ITLAP loans are authorized in 25 U.S.C. 488–494. Section 494 of title 25 provides partial authority for servicing these loans by incorporating portions of subtitle D of the Consolidated Farm and Rural Development Act (7 U.S.C. 1981–2008j). Section 331(b)(4) of the Consolidated Farm and Rural Development Act (7 U.S.C. 1981(b)(4)), which is part of subtitle D, gives the Secretary of Agriculture the authority to ''compromise, adjust, reduce, or charge-off debts or claims * * * and adjust, modify, subordinate, or release the terms of security instruments, leases, contracts, and agreements entered into or administered by [FSA]. * * *'' The Secretary has implemented this debt settlement authority for several loan programs formerly administered by the Farmers Home Administration, including ITLAP, in 7 CFR part 1956, subpart C. This regulation has not been rewritten since the former Farmers Home Administration was abolished in October 1994, when its programs were divided between the FSA and the Rural Development mission area.

The ITLAP debt settlement regulation provides that loans can be canceled or modified depending on the circumstances, but requires as a prerequisite to any debt settlement relief that the ITLAP debt must be all due and payable, either under its own terms or because it has been accelerated (§ 1956.109(a)). As noted above, because of the assignment of income provisions, none of the ITLAP loans have been accelerated and very few are even delinquent. Thus, under the debt settlement regulation, the loans do not qualify for debt settlement. (There is ''exception'' authority at § 1956.148 which could allow the ''all due and payable'' requirement to be waived, but only if the failure to waive this requirement would adversely affect the Government's interest.)

In addition to the debt settlement provisions of 331(b)(4) of the Consolidated Farm and Rural Development Act (7 U.S.C. 1981(b)(4)) which are applicable to ITLAP, Pub. L. 91–229 (August 14, 1989) was enacted to provide additional relief for ITLAP borrowers. The 1989 law authorizes the Secretary to ''reduce the unpaid principal balance of [an ITLAP loan] to the current fair market value of the land purchased with the proceeds of the loan or loans if (1) the fair market value of the land has declined by at least 25 percent since such land was purchased by the borrower; (2) the land has been held by the borrower for a period of at least 5 years; and (3) the Secretary of the Interior finds that the borrower has insufficient income to repay the loans or loans and provide normal tribal governmental services.'' There is no ''all due and payable'' requirement for the relief available under this law. Pursuant to this authority, the principal of several ITLAP loans was reduced.

The relief in Pub. L. 91–229 may not address the concerns of current tribal borrowers because in most cases the land has not declined in value by the required 25 percent. In addition, because ITLAP funds were used to purchase undivided interests and small parcels, it is in many cases extremely difficult and time consuming to determine the fair market value of the land purchased with ITLAP funds.

Budgetary Impact

One concern with providing debt relief for ITLAP loans involves the funding mechanism for all Government direct loan programs. Under the Federal Credit Reform Act of 1990 (Title V of the Congressional Budget Act of 1974, as amended by § 13201 of the Omnibus Budget Reconciliation Act of 1990, Pub. L. 101–508 (November 5, 1990)) (Credit Reform Act) and OMB Circular A–129, ''Policies for Federal Credit Programs and Non-Tax Receivables (January 11, 1993), the amount of Federal funding for a credit program is a function of the cost of the program. As the cost of the program increases, the amount of appropriations available for the loan program decreases. Debt relief to individual ITLAP borrowers would cause the costs to increase and, in the absence of increased levels of funding for the ITLAP, the amount of loan funds in future years will be lowered due to these increased costs.

Possible Debt Relief Alternatives

Under current FSA regulations, the tribes are not eligible for debt relief for their ITLAP loans. It is the purpose of this Advance Notice of Proposed Rulemaking to determine if debt relief is appropriate for ITLAP loans and, if so, what form the relief should take and the criteria for determining eligibility for this relief. We are also interested in the practical implications of the suggested alternatives.

While the following is not an exhaustive list and the Agency is interested in all possibilities, the following are ideas for debt relief that may be considered. The Agency is interested in comments on these ideas, as well as any other alternatives that commenters may suggest.

1. Cancel the ITLAP debts in full. What criteria would be used to determine if a debt should be canceled?

2. Reduce the principal amount of the outstanding ITLAP debt to the present value of expected future annual rental value of the land purchased with ITLAP loan funds and set the annual ITLAP loan payment at the annual rent received or that could be received from this land.

3. Restructure the loan by lowering the interest rate and reamortizing the balance of the loan over the remaining loan term.

4. Release the assignments of income and substitute real estate mortgages on the land purchased with ITLAP funds. The regulation could provide that payment terms of the loans would be restructured at such time.

5. Consider the changes in tribal revenues from all sources or other Government sources and grant a corresponding reduction in the loan principal.

6. Grant deferrals of annual payments if the income loss is temporary.

Dated: February 24, 1999.

August Schumacher, Jr.,

Under Secretary for Farm and Foreign Agricultural Services.

Dated: February 25, 1999.

Jill Long Thompson,

Under Secretary for Rural Development.

[FR Doc. 99–5225 Filed 3–2–99; 8:45 am]

BILLING CODE 3410–05–P

DEPARTMENT OF TRANSPORTATION

Federal Aviation Administration

14 CFR Part 39

[Docket No. 98–CE–123–AD]

RIN 2120–AA64

Airworthiness Directives; Raytheon Aircraft Company Model 1900D Airplanes

AGENCY: Federal Aviation Administration, DOT.

ACTION: Notice of proposed rulemaking (NPRM).

SUMMARY: This document proposes to adopt a new airworthiness directive (AD) that would apply to certain Raytheon Aircraft Company (Raytheon) Model 1900D airplanes that are equipped with the electric elevator trim option. The proposed AD would require installing electric elevator trim servo covers. The proposed AD is the result of reports of the affected airplanes leaving the factory without electric elevator trim servo covers installed. If the covers are not installed, moisture could freeze on parts of the electric actuator. The actions specified by the proposed AD are intended to prevent failure of the electric elevator trim and difficulty operating the manual elevator trim caused by moisture freezing on parts of the electric actuator installation, which would result in the pilot having to apply constant pressure to the control wheel during flight.

DATES: Comments must be received on or before April 30, 1999.

ADDRESSES: Submit comments in triplicate to the Federal Aviation Administration (FAA), Central Region, Office of the Regional Counsel, Attention: Rules Docket No. 98–CE–123–AD, Room 1558, 601 E. 12th Street, Kansas City, Missouri 64106. Comments may be inspected at this location between 8 a.m. and 4 p.m., Monday through Friday, holidays excepted.

Service information that applies to the proposed AD may be obtained from the Raytheon Aircraft Company, PO Box 85, Wichita, Kansas 67201–0085; telephone: (800) 625–7043 or (316) 676–4556. This information also may be examined at the Rules Docket at the address above.

FOR FURTHER INFORMATION CONTACT: Mr. Todd Dixon, Aerospace Engineer, Wichita Aircraft Certification Office, FAA, 1801 Airport Road, Mid-Continent Airport, Wichita, Kansas 67209; telephone: (316) 946–4152; facsimile: (316) 946–4407.

SUPPLEMENTARY INFORMATION:

Comments Invited

Interested persons are invited to participate in the making of the proposed rule by submitting such written data, views, or arguments as they may desire. Communications should identify the Rules Docket number and be submitted in triplicate to the address specified above. All communications received on or before the closing date for comments, specified above, will be considered before taking action on the proposed rule. The proposals contained in this notice may be changed in light of the comments received.

Comments are specifically invited on the overall regulatory, economic, environmental, and energy aspects of the proposed rule. All comments submitted will be available, both before and after the closing date for comments, in the Rules Docket for examination by interested persons. A report that summarizes each FAA-public contact concerned with the substance of this proposal will be filed in the Rules Docket.

Commenters wishing the FAA to acknowledge receipt of their comments submitted in response to this notice must submit a self-addressed, stamped postcard on which the following statement is made: ''Comments to Docket No. 98–CE–123–AD.'' The postcard will be date stamped and returned to the commenter.

Availability of NPRMs

Any person may obtain a copy of this NPRM by submitting a request to the FAA, Central Region, Office of the Regional Counsel, Attention: Rules Docket No. 98–CE–123–AD, Room 1558, 601 E. 12th Street, Kansas City, Missouri 64106.

Discussion

The FAA has received reports of certain Raytheon Model 1900D airplanes leaving the factory without electric elevator trim servo covers installed. This condition could be present on those airplanes without the Collins APS–65H Autopilot system that incorporate the optional electric motor-driven actuator installation for elevator trim control.

Without these electric elevator trim servo covers installed, moisture could freeze on parts of the electric actuator installation and cause failure of the electric elevator trim and difficulty operating the manual elevator trim. This would result in the pilot having to apply constant pressure to the control wheel during flight.

Relevant Service Information

Raytheon has issued Mandatory Service Bulletin SB 27–3080, Issued: October, 1998, and Mandatory Service Bulletin SB 27–3080, Revision 1, Issued December, 1998, which specify installing elevator trim servo covers on certain Raytheon Model 1900D airplanes that incorporate the electric elevator trim option. The procedures for accomplishing this installation are included in the instructions to Raytheon Kit No. 129–5035–1.

The FAA's Determination

After examining the circumstances and reviewing all available information related to the incidents described above, the FAA has determined that AD action should be taken to prevent the above-referenced condition from existing or developing on the affected airplanes.

Explanation of the Provisions of the Proposed AD

Since an unsafe condition has been identified that is likely to exist or develop in other Raytheon Model 1900D airplanes of the same type design that are equipped with the electric elevator trim option, the FAA is proposing AD action. The proposed AD would require installing electric elevator trim servo covers. Accomplishment of the proposed installation would be required in accordance with the instructions to Raytheon Kit No. 129–5035–1, as referenced in Raytheon Mandatory Service Bulletin SB 27–3080, Issued: October, 1998, and Raytheon Mandatory Service Bulletin SB 27–3080, Revision 1, Issued: December, 1998.

Cost Impact

The FAA estimates that 205 airplanes in the U.S. registry would be affected by the proposed AD, that it would take approximately 5 workhours per airplane to accomplish the proposed installation, and that the average labor rate is approximately $60 an hour. Raytheon will provide parts free of charge under warranty credit. Based on these figures, the total cost impact of the proposed AD on U.S. operators is estimated to be $61,500.

Raytheon will also give warranty credit for labor until October 31, 1999.

Regulatory Impact

The regulations proposed herein would not have substantial direct effects on the States, on the relationship between the national government and the States, or on the distribution of power and responsibilities among the various levels of government. Therefore, in accordance with Executive Order 12612, it is determined that this

proposal would not have sufficient federalism implications to warrant the preparation of a Federalism Assessment.

For the reasons discussed above, I certify that this action (1) is not a ''significant regulatory action'' under Executive Order 12866; (2) is not a ''significant rule'' under DOT Regulatory Policies and Procedures (44 FR 11034, February 26, 1979); and (3) if promulgated, will not have a significant economic impact, positive or negative, on a substantial number of small entities under the criteria of the Regulatory Flexibility Act. A copy of the draft regulatory evaluation prepared for this action has been placed in the Rules Docket. A copy of it may be obtained by contacting the Rules Docket at the location provided under the caption **ADDRESSES**.

List of Subjects in 14 CFR Part 39

Air transportation, Aircraft, Aviation safety, Safety.

The Proposed Amendment

Accordingly, pursuant to the authority delegated to me by the Administrator, the Federal Aviation Administration proposes to amend part 39 of the Federal Aviation Regulations (14 CFR part 39) as follows:

PART 39—AIRWORTHINESS DIRECTIVES

1. The authority citation for part 39 continues to read as follows:

Authority: 49 U.S.C. 106(g), 40113, 44701.

§ 39.13 [Amended]

2. Section 39.13 is amended by adding a new airworthiness directive (AD) to read as follows:

Raytheon Aircraft Company (Type Certificate No. A24CE formerly held by the Beech Aircraft Corporation): Docket No. 98–CE–123–AD.

Applicability: Model 1900D airplanes, serial numbers UE–1 through UE–246, certificated in any category, that incorporate the electric elevator trim option.

Note 1: This AD applies to each airplane identified in the preceding applicability provision, regardless of whether it has been modified, altered, or repaired in the area subject to the requirements of this AD. For airplanes that have been modified, altered, or repaired so that the performance of the requirements of this AD is affected, the owner/operator must request approval for an alternative method of compliance in accordance with paragraph (c) of this AD. The request should include an assessment of the effect of the modification, alteration, or repair on the unsafe condition addressed by this AD; and, if the unsafe condition has not been eliminated, the request should include specific proposed actions to address it.

Compliance: Required within the next 600 hours time-in-service (TIS) after the effective date of this AD, unless already accomplished.

To prevent failure of the electric elevator trim and difficulty operating the manual elevator trim caused by moisture freezing on parts of the electric actuator installation, which would result in the pilot having to apply constant pressure to the control wheel during flight, accomplish the following:

(a) Install electric elevator trim servo covers in accordance with the instructions in Kit No. 129–5035–1, as referenced in Raytheon Mandatory Service Bulletin SB 27–3080, Issued: October, 1998, and Raytheon Mandatory Service Bulletin SB 27–3080, Revision 1, Issued: December, 1998.

Note 2: The compliance time of this AD takes precedence over the compliance time specified in Raytheon Mandatory Service Bulletin SB 27–3080, Revision 1, Issued: December, 1998.

(b) Special flight permits may be issued in accordance with sections 21.197 and 21.199 of the Federal Aviation Regulations (14 CFR 21.197 and 21.199) to operate the airplane to a location where the requirements of this AD can be accomplished.

(c) An alternative method of compliance or adjustment of the compliance time that provides an equivalent level of safety may be approved by the Manager, Wichita Aircraft Certification Office (ACO), 1801 Airport Road, Room 100, Mid-Continent Airport, Wichita, Kansas 67209. The request shall be forwarded through an appropriate FAA Maintenance Inspector, who may add comments and then send it to the Manager, Wichita ACO.

Note 3: Information concerning the existence of approved alternative methods of compliance with this AD, if any, may be obtained from the Wichita ACO.

(d) All persons affected by this directive may obtain copies of the documents referred to herein upon request to the Raytheon Aircraft Corporation, P.O. Box 85, Wichita, Kansas 67201–0085; or may examine these documents at the FAA, Central Region, Office of the Regional Counsel, Room 1558, 601 E. 12th Street, Kansas City, Missouri 64106.

Issued in Kansas City, Missouri, on February 24, 1999.

Marvin R. Nuss,

Acting Manager, Small Airplane Directorate, Aircraft Certification Service.

[FR Doc. 99–5177 Filed 3–2–99; 8:45 am]

BILLING CODE 4910–13–U

DEPARTMENT OF TRANSPORTATION

Federal Aviation Administration

14 CFR Part 71

[Airspace Docket No. 99–AGL–13]

Proposed Modification of Class D Airspace and Class E Airspace; Rochester, MN

AGENCY: Federal Aviation Administration (FAA), DOT.

ACTION: Notice of proposed rulemaking.

SUMMARY: This notice proposes to modify Class D airspace and Class E airspace at Rochester, MN. This action would correct technical errors in the legal descriptions of the Class D airspace and the Class E airspace extension to the Class D airspace for Rochester International Airport, and amend the Class E surface area for the airport to include the Class E airspace extension. The purpose of these actions is to make technical corrections to the airspace legal descriptions in order to make the Class D airspace and Class E airspace for the airport consistent with each other, and to provide adequate controlled airspace for instrument approach procedures when the airport traffic control tower (ATCT) is closed.

DATES: Comments must be received on or before April 20, 1999.

ADDRESSES: Send comments on the proposal in triplicate to: Federal Aviation Administration, Office of the Assistant Chief Counsel, AGL–7, Rules Docket No. 99–AGL–13, 2300 East Devon Avenue, Des Plaines, Illinois 60018.

The official docket may be examined in the Office of the Assistant Chief Counsel, Federal Aviation Administration, 2300 East Devon Avenue, Des Plaines, Illinois. An informal docket may also be examined during normal business hours at the Air Traffic Division, Airspace Branch, Federal Aviation Administration, 2300 East Devon Avenue, Des Plaines, Illinois.

FOR FURTHER INFORMATION CONTACT: Michelle M. Behm, Air Traffic Division, Airspace Branch, AGL–520, Federal Aviation Administration, 2300 East Devon Avenue, Des Plaines, Illinois 60018, telephone (847) 294–7568.

SUPPLEMENTARY INFORMATION:

Comments Invited

Interested parties are invited to participate in this proposed rulemaking by submitting such written data, views, or arguments as they may desire. Comments that provide the factual basis supporting the views and suggestions presented are particularly helpful in developing reasoned regulatory decisions on the proposal. Comments are specifically invited on the overall regulatory, aeronautical, economic, environmental, and energy-related aspects of the proposal. Communications should identify the airspace docket number and be submitted in triplicate to the address listed above. Commenters wishing the FAA to acknowledge receipt of their

comments on this notice must submit with those comments a self-addressed, stamped postcard on which the following statement is made: ''Comments to Airspace Docket No. 99–AGL–13.'' The postcard will be date/time stamped and returned to the commenter. All communications received on or before the specified closing date for comments will be considered before taking action on the proposed rule. The proposal contained in this notice may be changed in light of comments received. All comments submitted will be available for examination in the Rules Docket, FAA, Great Lakes Region, Office of the Assistant Chief Counsel, 2300 East Devon Avenue, Des Plaines, Illinois, both before and after the closing date for comments. A report summarizing each substantive public contact with FAA personnel concerned with this rulemaking will be filed in the docket.

Availability of NPRM's

Any person may obtain a copy of this Notice of Proposed Rulemaking (NPRM) by submitting a request to the Federal Aviation Administration, Office of Public Affairs, Attention: Public Inquiry Center, APA–230, 800 Independence Avenue, SW., Washington, DC 20591, or by calling (202) 267–3484. Communications must identify the notice number of this NPRM. Persons interested in being placed on a mailing list for future NPRM's should also request a copy of Advisory Circular No. 11–2A, which describes the application procedure.

The Proposal

The FAA is considering an amendment to 14 CFR part 71 to modify Class D and associated Class E airspace at Rochester, MN, by making technical corrections to the legal description of the Class D airspace and the Class E airspace extension to the Class D airspace for Rochester International Airport, and by amending the Class E surface area for the airport to include the Class E extension to the surface area. Controlled airspace extending upward from the surface is needed to contain aircraft executing instrument approach procedures. The area would be depicted on appropriate aeronautical charts. Class D airspace designations are published in paragraph 5000, Class E air space designated as an extension to a Class D surface area are published in paragraph 6004, and Class E airspace areas designated as a surface area for an airport are published in paragraph 6002 of FAA Order 7400.9F dated September 10, 1998, and effective September 16, 1998, which is incorporated by reference in 14 CFR 71.1. The Class D and Class E airspace designations listed in this document would be published subsequently in that Order.

The FAA has determined that this proposed regulation only involves an establishment body of technical regulations for which frequent and routine amendments are necessary to keep them operationally current. Therefore, this proposed regulation—(1) is not a ''significant regulatory action'' under Executive Order 12866; (2) is not a ''significant rule'' under DOT Regulatory Policies and Procedures (44 FR 11034; February 26, 1979); and (3) does not warrant preparation of a Regulatory Evaluation as the anticipated impact is so minimal. Since this is a routine matter that will only affect air traffic procedures and air navigation, it is certified that this proposed rule will not have a significant economic impact on a substantial number of small entities under the criteria of the Regulatory Flexibility Act.

List of Subjects in 14 CFR Part 71

Airspace, Incorporation by reference, Navigation (air).

The Proposed Amendment

Accordingly, pursuant to the authority delegated to me, the Federal Aviation Administration proposes to amend 14 CFR part 71 as follows:

PART 71—DESIGNATION OF CLASS A, CLASS B, CLASS C, CLASS D, AND CLASS E AIRSPACE AREAS; AIRWAYS; ROUTES; AND REPORTING POINTS

1. The authority citation for part 71 continues to read as follows:

Authority: 49 U.S.C. 106(g), 40103, 40113, 40120; E.O. 10854, 24 FR 9565, 3 CFR, 1959–1963 Comp., p. 389.

§ 71.1 [Amended]

2. The incorporation by reference in 14 CFR 71.1 of the Federal Aviation Administration Order 7400.9F, Airspace Designations and Reporting Points, dated September 10, 1998, and effective September 16, 1998, is amended as follows:

Paragraph 5000 Class D Airspace.

* * * * *

AGL MN D Rochester, MN [Revised]

Rochester International Airport, MN
(Lat. 43° 54′ 32″N., long. 92° 29′ 53″W.)

That airspace extending upward from the surface to and including 3,800 feet MSL within a 4.2-mile radius of the Rochester International Airport. This Class D airspace area is effective during the specific dates and times established in advance by a Notice to Airman. The effective date and time will thereafter be continuously published in the Airport/facility Directory.

* * * * *

Paragraph 6004 Class E airspace areas designated as an extension to a Class D surface area.

* * * * *

AGL MN E4 Rochester, MN [Revised]

Rochester International Airport, MN
(Lat. 43° 54′ 32″N., long. 92° 29′ 53″W.)
Rochester VOR/DME
(Lat. 43° 46′ 58″N., long. 92° 35′ 49″W.)

That airspace extending upward from the surface within 3.1 miles each side of the Rochester VOR/DME 028° radial extending from the 4.2-mile radius of the Rochester International Airport to 7.0 miles southwest of the airport. This Class E airspace area is effective during the specific dates and times established in advance by a Notice to Airman. The effective date and time will thereafter be continuously published in the Airport/facility Directory.

* * * * *

Paragraph 6002 Class E airspace areas designated as a surface area for an airport.

* * * * *

AGL MN E2 Rochester, MN [Revised]

Rochester International Airport, MN
(Lat. 43° 54′ 32″N., long. 92° 29′ 53″W.)
Rochester VOR/DME
(Lat. 43° 46′ 58″N., long. 92° 35′ 49″W.)

Within a 4.2-mile radius of the Rochester International Airport and within 3.1 miles each side of the Rochester VOR/DME 028° radial extending from the 4.2-mile radius of the Rochester International Airport to 7.0 miles southwest of the airport. This Class E airspace area is effective during the specific dates and times established in advance by a Notice to Airman. The effective date and time will thereafter be continuously published in the Airport/facility Directory.

* * * * *

Issued in Des Plaines, Illinois on February 16, 1999.

David P. Johnson,

Acting Manager, Air Traffic Division.

[FR Doc. 99–5252 Filed 3–2–99; 8:45 am]

BILLING CODE 4910–13–M

DEPARTMENT OF TRANSPORTATION

Federal Aviation Administration

14 CFR Part 71

[Airspace Docket No. 99–AGL–16]

Proposed Modification of Class E Airspace; Muskegon, MI

AGENCY: Federal Aviation Administration (FAA), DOT.

ACTION: Notice of proposed rulemaking.

SUMMARY: This notice proposes to modify Class E airspace at Muskegon, MI. This action would correct the times

of operation of the Class E airspace extension associated with the Class D airspace for Muskegon County Airport, and amend the Class E surface area for the airport to include an airspace extension. The purpose of these actions is to make the Class D airspace and the associated Class E airspace extension for the airport consistent with each other, and to provide adequate controlled airspace for instrument approach procedures when the airport traffic control tower (ATCT) is closed.

DATES: Comments must be received on or before April 20, 1999.

ADDRESSES: Send comments on the proposal in triplicate to: Federal Aviation Administration, Office of the Assistant Chief Counsel, AGL–7, Rules Docket No. 99–AGL–16, 2300 East Devon Avenue, Des Plaines, Illinois 60018.

The official docket may be examined in the Office of the Assistant Chief Counsel, Federal Aviation Administration, 2300 East Devon Avenue, Des Plaines, Illinois. An informal docket may also be examined during normal business hours at the Air Traffic Division, Airspace Branch, Federal Aviation Administration, 2300 East Devon Avenue, Des Plaines, Illinois.

FOR FURTHER INFORMATION CONTACT: Michelle M. Behm, Air Traffic Division, Airspace Branch, AGL–520, Federal Aviation Administration, 2300 East Devon Avenue, Des Plaines, Illinois 60018, telephone (847) 294–7568.

SUPPLEMENTARY INFORMATION:

Comments Invited

Interested parties are invited to participate in this proposed rulemaking by submitting such written data, views, or arguments as they may desire. Comments that provide the factual basis supporting the views and suggestions presented are particularly helpful in developing reasoned regulatory decisions on the proposal. Comments are specifically invited on the overall regulatory, aeronautical, economic, environmental, and energy-related aspects of the proposal. Communications should identify the airspace docket number and be submitted in triplicate to the address listed above. Commenters wishing the FAA to acknowledge receipt of their comments on this notice must submit with those comments a self-addressed, stamped postcard on which the following statement is made: ''Comments to Airspace Docket No. 99–AGL–16.'' The postcard will be date/time stamped and returned to the commenter. All communications received on or before the specified closing date for comments will be considered before taking action on the proposed rule. The proposal contained in this notice may be changed in light of comments received. All comments submitted will be available for examination in the Rules Docket, FAA, Great Lakes Region, Office of the Assistant Chief Counsel, 2300 East Devon Avenue, Des Plaines, Illinois, both before and after the closing date for comments. A report summarizing each substantive public contact with FAA personnel concerned with this rulemaking will be filed in the docket.

Availability of NPRM's

Any person may obtain a copy of this Notice of Proposed Rulemaking (NPRM) by submitting a request to the Federal Aviation Administration, Office of Public Affairs, Attention: Public Inquiry Center, APA–230, 800 Independence Avenue, S.W., Washington, DC 20591, or by calling (202) 267–3484. Communications must identify the notice number of this NPRM. Persons interested in being placed on a mailing list for future NPRM's should also request a copy of Advisory Circular No. 11–2A, which describes the application procedure.

The Proposal

The FAA is considering an amendment to 14 CFR part 71 to modify Class E airspace at Muskegon, MI, by making the times of operation of the Class D airspace and the Class E airspace extension to the Class D airspace for Muskegon County Airport consistent with each other, and by amending the Class E surface areas for the airport to include an extension. Controlled airspace extending upward from the surface is needed to contain aircraft executing instrument approach procedures. The area would be depicted on appropriate aeronautical charts. Class E airspace areas designated as an extension to a Class D surface area are published in paragraph 6004, and Class E airspace areas designated as a surface area for an airport are published in paragraph 6002 of FAA Order 7400.9F dated September 10, 1998, and effective September 16, 1998, which is incorporated by reference in 14 CFR 71.1. The Class E airspace designations listed in this document would be published subsequently in the Order.

The FAA has determined that this proposed regulation only involves an establishment body of technical regulations for which frequent and routine amendments are necessary to keep them operationally current. Therefore this, proposed regulation—(1) is not a ''significant regulatory action'' under executive Order 12866; (2) is not a ''significant rule'' under DOT Regulatory Policies and Procedures (44 FR 11034; February 26, 1979); and (3) does not warrant preparation of a Regulatory Evaluation as the anticipated impact is so minimal. Since this is a routine matter that will only affect air traffic procedures and air navigation, it is certified that this proposed rule will not have a significant economic impact on a substantial number of small entities under the criteria of the Regulatory Flexibility Act.

List of the subjects in 14 CFR Part 71

Airspace, Incorporation by reference, Navigation (air).

The Proposed Amendment

Accordingly, pursuant to the authority delegated to me, the Federal Aviation Administration proposes to amend 14 CFR part 71 as follows:

PART 71—DESIGNATION OF CLASS A, CLASS B, CLASS C, CLASS E, AND CLASS AIRSPACE AREAS; AIRWAYS; ROUTES; AND REPORTING POINTS

1. The authority citation of part 71 continues to read as follows:

Authority: 49 U.S.C. 106(g), 40103, 40113, 40120; E.O. 10854, 24 FR 9565, 3 CFR, 1959–1963 Comp., p. 398.

§ 71.1 [Amended]

2. The incorporation by reference in 14 CFR 71.1 of the Federal Aviation Administration Order 7400.9F, Airspace Designations and Reporting Points, dated September 10, 1998, and effective September 16, 1998, is amended as follows:

Paragraph 6004 Class E airspace areas designated as an extension to a Class D surface area.

* * * * *

AGL MI E4 MUSKEGON, MI [Revised]

Muskegon County Airport, MI
(Lat. 43°10′10″ N., long. 086°14′18″ W.)
Muskegon VORTAC
(Lat. 43°10′09″ N., long 086°02′22″ W.)

That airspace extending upward from the surface within 1.3 miles each side of the Muskegon VORTAC 271° radial extending from the VORTAC to the 4.2-mile radius of the Muskegon County Airport. This Class E airspace area is effective during the specific dates and times established in advance by a Notice of the Airman. The effective date and time will thereafter be continuously published in the Airport/facility Director.

* * * * *

Paragraph 6002 Class E airspace areas designated as a surface area for an airport.

* * * * *

AGL MI E2 Muskegon, MI [Revised]

Muskegon County Airport, MI
(Lat. 43°10′10″ N., long. 086°14′18″ W.)

Within a 4.2-mile radius of the Muskegon County Airport within 1.3 miles each side of the Muskegon VORTAC 271° radial extending form the VORTAC to the 4.2-mile radius of the Muskegon County Airport. This Class E airspace area is effective during the specific dates and times established in advance by a Notice to Airman. The effective date and time will thereafter be continuously published in the Airport/facility Directory.

* * * * *

Issued in Des Plaines, Illinois on February 16, 1999.

David B. Johnson,

Acting Manager, Air Traffic Division.

[FR Doc. 99–5255 Filed 3–2–99; 8:45 am]

BILLING CODE 4910–13–M

DEPARTMENT OF TRANSPORTATION

Federal Aviation Administration

14 CFR Part 71

[Airspace Docket No. 99–AGL–14]

Proposed Modification of Class D Airspace and Class E Airspace; Wilmington, OH

AGENCY: Federal Aviation Administration (FAA), DOT.

ACTION: Notice of proposed rulemaking.

SUMMARY: This notice proposes to modify Class D airspace and Class E airspace at Wilmington, OH. This action would correct technical errors in the legal descriptions of the Class D airspace and the Class E airspace extension to the Class D airspace for Airborne Airpark, and amend the Class E surface area for the airport to include the Class E airspace extension. The purpose of these actions is to make technical corrections to the airspace legal descriptions in order to make the Class D airspace and Class E airspace for the airport consistent with each other, and to provide adequate controlled airspace for instrument approach procedures when the airport traffic control tower (ATCT) is closed.

DATES: Comments must be received on or before April 20, 1999.

ADDRESSES: Send comments on the proposal in triplicate to: Federal Aviation Administration, Office of the Assistant Chief Counsel, AGL–7, Rules Docket No. 99–AGL–14, 2300 East Devon Avenue, Des Plaines, Illinois 60018.

The official docket may be examined in the Office of the Assistant Chief Counsel, Federal Aviation Administration, 2300 East Devon Avenue, Des Plaines, Illinois. An informal docket may also be examined during normal business hours at the Air Traffic Division, Airspace Branch, Federal Aviation Administration, 2300 East Devon Avenue, Des Plaines, Illinois.

FOR FURTHER INFORMATION CONTACT: Michelle M. Behm, Air Traffic Division, Airspace Branch, AGL–520, Federal Aviation Administration 2300 East Devon Avenue, Des Plaines, Illinois 60018, telephone (847) 294–7568.

SUPPLEMENTARY INFORMATION:

Comments Invited

Interested parties are invited to participate in this proposed rulemaking by submitting such written data, views, or arguments as they may desire. Comments that provide the factual basis supporting the views and suggestions presented are particularly helpful in developing reasoned regulatory decisions on the proposal. Comments are specifically invited on the overall regulatory, aeronautical, economic, environmental, and energy-related aspects of the proposal. Communications should identify the airspace docket number and be submitted in triplicate to the address listed above. Commenters wishing the FAA to acknowledge receipt of their comments on this notice must submit with those comments a self-addressed, stamped postcard on which the following statement is made: ''Comments to Airspace Docket No. 99–AGL–14.'' The postcard will be date/time stamped and returned to the commenter. All communications received on or before the specified closing date for comments will be considered before taking action on the proposed rule. The proposal contained in this notice may be changed in light of comments received. All comments submitted will be available for examination in the Rules Docket, FAA, Great Lakes Region, Office of the Assistant Chief Counsel, 2300 East Devon Avenue, Des Plaines, Illinois, both before and after the closing date for comments. A report summarizing each substantive public contact with FAA personnel concerned with this rulemaking will be filed in the docket.

Availability of NPRM's

Any person may obtain a copy of this Notice of Proposed Rulemaking (NPRM) by submitting a request to the Federal Aviation Administration, Office of Public Affairs, Attention: Public Inquiry Center, APA–230, 800 Independence Avenue, SW., Washington, DC 20591, or by calling (202) 267–3484. Communications must identify the notice number of this NPRM. Persons interested in being placed on a mailing list for future NPRM's should also request a copy of Advisory Circular No. 11–2A, which describes the application procedure.

The Proposal

The FAA is considering an amendment to 14 CFR part 71 to modify Class D and associated Class E airspace at Wilmington, OH, by making technical corrections to the legal descriptions of the Class D airspace and the Class E airspace extension to the Class D airspace for Airborne Airpark, and by amending the Class E surface area for the airport to include the Class E extension to the surface area. Controlled airspace extending upward from the surface is needed to contain aircraft executing instrument approach procedures. The area would be depicted on appropriate aeronautical charts. Class D airspace designations are published in paragraph 5000, Class E airspace areas designated as an extension to a Class D surface area are published in paragraph 6004, and Class E airspace areas designated as a surface area for an airport are published in paragraph 6002 of FAA Order 7400.9F dated September 10, 1998, and effective September 16, 1999, which is incorporated by reference in 14 CFR 71.1. The Class D and Class E airspace designations listed in this document would be published subsequently in the Order.

The FAA has determined that this proposed regulation only involves an establishment body of technical regulations for which frequent and routine amendments are necessary to keep them operationally current. Therefore this, proposed regulation—(1) is not a ''significant regulatory action'' under Executive Order 12866; (2) is not a ''significant rule'' under DOT Regulatory Policies and Procedures (44 FR 11034; February 26, 1979); and (3) does not warrant preparation of a Regulatory Evaluation as the anticipated impact is so minimal. Since this is a routine matter that will only affect air traffic procedures and air navigation, it is certified that this proposed rule will not have a significant economic impact on a substantial number of small entities under the criteria of the Regulatory Flexibility Act.

List of Subjects in 14 CFR Part 71

Airspace, Incorporation by reference, Navigation (air).

The Proposed Amendment

Accordingly, pursuant to the authority delegated to me, the Federal Aviation Administration proposes to amend 14 CFR part 71 as follows:

PART 71—DESIGNATION OF CLASS A, CLASS B, CLASS C, CLASS D, AND CLASS E AIRSPACE AREAS; AIRWAYS; ROUTES; AND REPORTING POINTS

1. The authority citation for part 71 continues to read as follows:

Authority: 49 U.S.C. 106(g), 40103, 40113, 40120; E.O. 10854, 24 FR 9565, 3 CFR, 1959–1963 Comp., p. 389.

§ 71.1 [Amended]

2. The incorporation by reference in 14 CFR 71.1 of the Federal Aviation Administration Order 7400.9F, Airspace Designations and Reporting Points, dated September 10, 1998, and effective September 16, 1998, is amended as follows:

Paragraph 5000 Class D airspace.

* * * * *

AGL OH D Wilmington, OH [Revised]

Wilmington, Airborne Airpark, OH
(Lat. 39°25′41″ N., long. 083°47′32″ W.)
Wilmington, Hollistor Field Airport, OH
(Lat. 39°26′15″ N., long. 083°42′30″ W.)

That airspace extending upward from the surface to and including 3,600 feet MSL within a 4.2-mile radius of the Airborne Airpark, excluding that portion of airspace within a 1-mile radius of Hollister Field Airport. This Class D airspace area is effective during the specific dates and times established in advance by a Notice to Airman. The effective date and time will thereafter be continuously published in the Airport/facility Directory.

* * * * *

Paragraph 6004 Class E airspace areas designated as an extension to a Class D surface area.

* * * * *

AGL OH E4 Wilmington, OH [Revised]

Wilmington, Airborne Airpark, OH
(Lat. 39° 25′ 41″ N., long. 083° 47′ 32″ W.)
Wilmington, Hollister Field Airport, OH
(Lat. 39° 26′ 16″ N., long. 083° 42′ 30″ W.)
Midwest VOR/DME
(Lat. 39° 26′ 47″ N., long. 083° 48′ 94″ W.)

That airspace extending upward from the surface within 3.7 miles each side of the Midwest VOR/DME 215° radial, extending from the 4.1-mile radius of the Airborne Airport to 7.0 miles southwest of the airport, and within 3.7 miles each side of the Midwest VOR/DME 041° radial extending from the 4.2-mile radius of the airport to 7.0 miles northeast of the airport, excluding that portion of airspace within a 1-mile radius of Hollister Field Airport. This Class E airspace area is effective during the specific dates and times established in advance by a Notice to Airman. The effective date and time will thereafter be continuously published in the Airport/facility Directory.

* * * * *

Paragraph 6002 Class E airspace areas designated as a surface area for an airport.

* * * * *

AGL OH E2 Wilmington, OH [Revised]

Wilmington, Airborne Airpark, OH
(Lat. 39° 25′ 41″ N., long. 083° 47′ 32″ W.)
Wilmington, Hollister Field Airport, OH
(Lat. 39° 26′ 15″ N., long. 083° 42′ 30″ W.)

Within a 4.2-mile radius of the Airborne Airpark, and within 3.7 miles each side of the Midwest VOR/DME 215° radial, extending from the 4.2-mile radius of the Airborne Airpark to 7.0 miles southwest of the airport, and within 3.7 miles each side of the Midwest VOR/DME 041° radial extending from the 4.2-mile radius of the airport to 7.0 miles northeast of the airport, excluding that portion of airspace within a 1-mile radius of Hollister Field Airport. This Class E airspace area is effective during the specific dates and times established in advance by a Notice to Airman. The effective date and time will thereafter be continuously published in the Airport/facility Directory.

* * * * *

Issued in Des Plaines, Illinois on February 16, 1999.

David B. Johnson,

Acting Manager, Air Traffic Division.

[FR Doc. 99–5253 Filed 3–2–99; 8:45 am]

BILLING CODE 4910–13–M

DEPARTMENT OF TRANSPORTATION

Federal Aviation Administration

14 CFR Part 71

[Airspace Docket No. 99–AGL–15]

Proposed Modification of Class E Airspace; Jackson, MI

AGENCY: Federal Aviation Administration (FAA), DOT.

ACTION: Notice of proposed rulemaking.

SUMMARY: This notice proposes to modify Class E airspace at Jackson, MI. This action would correct the times of operation of the Class E airspace extension associated with the Class D airspace for Jackson County-Reynolds Field, and amend the Class E Surface area for the airport to include an airspace extension. The purposes of these actions is to make the Class D airspace and the associated Class E airspace extension for the airport consistent with each other, and to provide adequate controlled airspace for instrument approach procedures when the airport traffic control tower (ATCT) is closed.

DATES: Comments must be received on or before April 20, 1999.

ADDRESSES: Send comments on the proposal in triplicate to: Federal Aviation Administration, Office of the Assistant Chief Counsel, AGL–7, Rules Docket No. 99–AGL–15, 2300 East Devon Avenue, Des Plaines, Illinois 60018.

The official docket may be examined in the Office of the Assistant Chief Counsel, Federal Aviation Administration, 2300 East Devon Avenue, Des Plaines, Illinois. An informal docket may also be examined during normal business hours at the Air Traffic Division, Airspace Branch, Federal Aviation, 2300 East Devon Avenue, Des Plaines, Illinois.

FOR FURTHER INFORMATION: Michelle M. Behm, Air Traffic Division, Airspace Branch, AGL–520, Federal Aviation Administration, 2300 East Devon Avenue, Des Plaines, Illinois 60018, telephone (847) 294–7568.

SUPPLEMENTARY INFORMATION:

Comments Invited

Interested parties are invited to participate in this proposed rulemaking by submitting such written data, views, or arguments as they may desire. Comments that provide the factual basis supporting the views and suggestions presented are particularly helpful in developing reasoned regulatory decisions on the proposal. Comments are specifically invited on the overall regulatory, aeronautical, economic , environmental, and energy-related aspects of the proposal. Communications should identify the airspace docket number and be submitted in triplicate to the address listed above. Commenters wishing the FAA to acknowledge receipt of their comments on this notice must submit with those comments a self-addressed, stamped postcard on which the following staff is made: ''Comments to Airspace Docket No. 99–AGL–15.'' The postcard will be date/time stamped and returned to the commenter. All communications received on or before the specific closing date for closing will be considered before taking action in the proposed rule. The proposal contained in this notice may be change in light of comments received. All comments submitted will be available for examination in the Rules Docket, FAA, Great Lakes Region, Office of the Assistant Chief Counsel, 2300 East Devon Avenue, Des Plaines, Illinois, both before and after the closing date for comments. A report summarizing each substantive public contact with FAA personnel concerned with this rulemaking will be filed in the docket.

Availability of NPRM's

Any person may obtain a copy of this Notice of Proposed Rulemaking (NPRM) by submitting a request to the Federal Aviation Administration Office of Public Affairs, Attention: Public Inquiry Center, APA–230, 800 Independence Avenue, S.W., Washington, DC 20591, or by calling (202) 267–3484. Communications must identify the notice number of this NPRM. Persons interested in being placed on a mailing list for future NPRM's should also request a copy of Advisory Circular No. 11–2A, which describes the application procedure.

The Proposal

The FAA is considering an amendment to 14 CFR part 71 to modify Class E airspace at Jackson, MI, by making the times of operation of the Class D airspace and the Class E airspace extension to the Class D airspace for Jackson County-Reynolds Field consistent with each other, and by amending the Class E surface area for the airport to include an extension. Controlled airspace extending upward from the surface is needed to contain aircraft executing instrument approach procedures. The area would be depicted on appropriate aeronautical charts. Class E airspace areas designated as an extension to a Class D surface area are published in paragraph 6004, and Class E airspace areas designated as a surface area for an airport are published in paragraph 6002 of FAA Order 7400.9F dated September 10, 1998, and effective September 16, 1998, which is incorporated by reference in 14 CFR 71.1. The Class E airspace designations listed in this document would be published subsequently in the Order.

The FAA has determined that this proposed regulation only involves an establishment body of technical regulations for which frequent and routine amendments are necessary to keep them operationally current. Therefore this, proposed regulation—(1) is not a ''significant regulatory action'' under Executive Order 12866; (2) is not a ''significant rule'' under DOT Regulatory Policies and Procedures (44 FR 11034; February 26, 1979); and (3) does not warrant preparation of a Regulatory Evaluation as the anticipated impact is so minimal. Since this is a routine matter that will only affect air traffic procedures and air navigation, it is certified that this proposed rule will not have a significant economic impact on a substantial number of small entities under the criteria of the Regulatory Flexibility Act.

List of Subjects in 14 CFR Part 71

Airspace, Incorporation by reference, Navigation (air).

The Proposed Amendment

Accordingly, pursuant to the authority delegated to me, the Federal Aviation Administration proposes to amend 14 CFR part 71 as follows:

PART 71—DESIGNATION OF CLASS A, CLASS B, CLASS C, CLASS D, AND CLASS E AIRSPACE AREAS; AIRWAYS; ROUTES; AND REPORTING POINTS

1. The authority citation for part 71 continues to read as follows:

Authority: 49 U.S.C. 106(g), 40103, 40113, 40120; E.O. 10854, 24 FR 9565, 3 CFR, 1959–1963 Comp., p. 389.

§ 71.1 [Amended]

2. The incorporation by reference in 14 CFR 71.1 of the Federal Aviation Administration Order 7400.9F, Airspace Designations and Reporting Points, dated September 10, 1998, and effective September 16, 1998, is amended as follows:

Paragraph 6004 Class E airspace areas designated as an extension to a Class D surface area.

* * * * *

AGL MI E4 Jackson, MI [Revised]

Jackson County-Reynolds Field, MI
(Lat. 42° 15′ 35″N., long. 084° 27′ 34″W.)
Jackson VOR/DME
(Lat. 42° 15′ 33″N., long. 84° 27′ 31″W.)

That airspace extending upward from the surface within 1.7 miles each side of the Jackson VOR/DME 236° radial extending from the 4.0-mile radius of the Jackson County-Reynolds Field to 7.0 miles southwest of the VOR/DME, and within 1.7 miles each side of the Jackson VOR/DME 307° radial extending from the 4.0-mile radius of the Jackson County-Reynolds Field to 7.0 miles northwest of the VOR/DME. This Class E airspace area is effective during the specific dates and times established in advance by a Notice to Airman. The effective date and time will thereafter be continuously published in the Airport/facility Directory.

* * * * *

Paragraph 6002 Class E airspace areas designated as a surface area for an airport.

* * * * *

AGL MI E2 Jackson, MI [Revised]

Jackson County-Reynolds Field, MI
(Lat. 42° 15′ 35″N., long. 84° 27′ 34″W.)

Within a 4.0-mile radius of the Jackson County-Reynolds Field and within 1.7 miles each side of the Jackson VOR/DME 236° radial extending from the 4.0-mile radius of the Jackson County-Reynolds Field to 7.0 miles southwest of the VOR/DME, and within 1.7 miles each side of the Jackson VOR/DME 307° radial extending from the 4.0-mile radius of the Jackson County-Reynolds Field to 7.0 miles northwest of the VOR/DME. This Class E airspace area is effective during the specific dates and times established in advance by a Notice to Airman. The effective date and time will thereafter be continuously published in the Airport/facility Directory.

* * * * *

Issued in Des Plaines, Illinois on February 16, 1999.

David B. Johnson,

Acting Manager, Air Traffic Division.

[FR Doc. 99–5254 Filed 3–2–99; 8:45 am]

BILLING CODE 4910–13–M

DEPARTMENT OF TRANSPORTATION

Federal Aviation Administration

14 CFR Part 71

[Airspace Docket No. 99–AGL–12]

Proposed Modification of Class D Airspace and Class E Airspace; Minot, ND

AGENCY: Federal Aviation Administration (FAA), DOT.

ACTION: Notice of proposed rulemaking.

SUMMARY: This notice proposes to modify Class D airspace and Class E airspace at Minot, ND. This action would correct technical errors in the legal descriptions of the Class D airspace and the Class E airspace extension to the Class D airspace for Minot International Airport, and amend the Class E surface area for the airport to include the Class E airspace extension. The purpose of these actions is to make technical corrections to the airspace legal descriptions in order to make the Class D airspace and Class E airspace for the airport consistent with each other, and to provide adequate controlled airspace for instrument approach procedures when the airport traffic control tower (ATCT) is closed.

DATES: Comments must be received on or before April 20, 1999.

ADDRESSES: Send comments on the proposal in triplicate to: Federal Aviation Administration, Office of the Assistant Chief Counsel, AGL–7, Rules Docket No. 99–AGL–12, 2300 East Devon Avenue, Des Plaines, Illinois 60018.

The official docket may be examined in the Office of the Assistant Chief Counsel, Federal Aviation Administration, 2300 East Devon Avenue, Des Plaines, Illinois. An informal docket may also be examined during normal business hours at the Air Traffic Division, Airspace Branch, Federal Aviation Administration, 2300

East Devon Avenue, Des Plaines, Illinois.

FOR FURTHER INFORMATION CONTACT: Michelle M. Behm, Air Traffic Division, Airspace Branch, AGL–520, Federal Aviation Administration, 2300 East Devon Avenue, Des Plaines, Illinois 60018, telephone (847) 294–7568.

SUPPLEMENTARY INFORMATION:

Comments Invited

Interested parties are invited to participate in this proposed rulemaking by submitting such written data, views, or arguments as they may desire. Comments that provide the factual basis supporting the views and suggestions presented are particularly helpful in developing reasoned regulatory decisions on the proposal. Comments are specifically invited on the overall regulatory, aeronautical, economic, environmental, and energy-related aspects of the proposal. Communications should identify the airspace docket number and be submitted in triplicate to the address listed above. Commenters wishing the FAA to acknowledge receipt of their comments on this notice must submit with those comments a self-addressed, stamped postcard on which the following statement is made: ''Comments to Airspace Docket No. 99–AGL–12.'' The postcard will be date/time stamped and returned to the commenter. All communications received on or before the specified closing date for comments will be considered before taking action on the proposed rule. The proposal contained in this notice may be changed in light of comments received. All comments submitted will be available for examination in the Rules Docket, FAA, Great Lakes Region, Office of the Assistant Chief Counsel, 2300 East Devon Avenue, Des Plaines, Illinois, both before and after the closing date for comments. A report summarizing each substantive public contact with FAA personnel concerned with this rulemaking will be filed in the docket.

Availability of NPRM's

Any person may obtain a copy of this Notice of Proposed Rulemaking (NPRM) by submitting a request to the Federal Aviation Administration, Office of Public Affairs, Attention: Public Inquiry Center, APA–230, 800 Independence Avenue, SW, Washington, DC 20591, or by calling (202) 267–3484. Communications must identify the notice number of this NPRM. Persons interested in being placed on a mailing list for future NPRM's should also request a copy of Advisory Circular No. 11–2A, which describes the application procedure.

The Proposal

The FAA is considering an amendment to 14 CFR part 71 to modify Class D and associated Class E airspace at Minot, ND, by making technical corrections to the legal descriptions of the Class D airspace and the Class E airspace extension to the Class D airspace for Minot International Airport, and by amending the Class E surface area for the airport to include the Class E extension to the surface area. Controlled airspace extending upward from the surface is needed to contain aircraft executing instrument approach procedures. The area would be depicted on appropriate aeronautical charts. Class D airspace designations are published in paragraph 5000, Class E airspace areas designated as an extension to a Class D surface area are published in paragraph 6004, and Class E airspace areas designated as a surface area for an airport are published in paragraph 6002 of FAA Order 7400.9F dated September 10, 1998, and effective September 16, 1998, which is incorporated by reference in 14 CFR 71.1. The Class D and Class E airspace designations listed in this document would be published subsequently in the Order.

The FAA has determined that this proposed regulation only involves an establishment body of technical regulations for which frequent and routine amendments are necessary to keep them operationally current. Therefore this proposed regulation—(1) is not a ''significant regulatory action'' under Executive Order 12866; (2) is not a ''significant rule'' under DOT Regulatory Policies and Procedures (44 FR 11034; February 26, 1979); and (3) does not warrant preparation of a Regulatory Evaluation as the anticipated impact is so minimal. Since this is a routine matter that will only affect air traffic procedures and air navigation, it is certified that this proposed rule will not have a significant economic impact on a substantial number of small entities under the criteria of the Regulatory Flexibility Act.

List of Subjects in 14 CFR Part 71

Airspace, Incorporation by reference, Navigation (air).

The Proposed Amendment

Accordingly, pursuant to the authority delegated to me, the Federal Aviation Administration proposes to amend 14 CFR part 71 as follows:

PART 71—DESIGNATION OF CLASS A, CLASS B, CLASS C, CLASS D, AND CLASS E AIRSPACE AREAS; AIRWAYS; ROUTES; AND REPORTING POINTS

1. The authority citation for part 71 continues to read as follows:

Authority: 49 U.S.C. 106(g), 40103, 40113, 40120; E.O. 10854, 24 FR 9565, 3 CFR, 1959–1963 Comp., p. 389.

§ 71.1 [Amended]

2. The incorporation by reference in 14 CFR 71.1 of the Federal Aviation Administration Order 7400.9F, Airspace Designations and Reporting Points, dated September 10, 1998, and effective September 16, 1998, is amended as follows:

Paragraph 5000 Class D airspace.

* * * * *

AGL ND D Minot, ND [Revised]

Minot International Airport, ND
(Lat. 48°15′34″N., long. 101°16′52″W.)

That airspace extending upward from the surface to and including 4,200 feet MSL within a 4.2-mile radius of the Minot International Airport. This Class D airspace area is effective during the specific dates and times established in advance by a Notice to Airman. The effective date and time will thereafter be continuously published in the Airport/facility Directory.

* * * * *

Paragraph 6004 Class E airspace areas designated as an extension to a Class D surface area.

* * * * *

AGL ND E4 Minot, ND [Revised]

Minot International Airport, ND
(Lat. 48°15′34″N., long. 101°16′52″W.)
Minot VORTAC
(Lat. 48°15′37″N., long. 101°17′13″W.)

That airspace extending upward from the surface within 3.5 miles each side of the Minot VORTAC 129° radial, extending from the 4.2-mile radius of the airport to 7.0 miles southeast of the VORTAC, and within 3.5 miles each side of the Minot VORTAC 260° radial, extending from the 4.2-mile radius of the airport to 7.0 miles west of the VORTAC, and within 3.5 miles each side of the Minot VORTAC 327° radial, extending from the 4.2-mile radius of the airport to 7.0 miles northwest of the VORTAC, and within 3.5 miles each side of the Minot VORTAC 097° radial, extending from the 4.2-mile radius to 7.0 miles east of the VORTAC, excluding the portion which overlies the Minot AFB, ND, Class D airspace area. This Class E airspace area is effective during the specific dates and times established in advance by a Notice to Airman. The effective date and time will thereafter be continuously published in the Airport/facility Directory.

* * * * *

Paragraph 6002 Class E airspace areas designated as a surface area for an airport.

* * * * *

AGL ND E2 Minot, ND [Revised]

Minot International Airport, ND
(Lat. 48°15′34″N., long. 101°16′52″W.)
Minot VORTAC
(Lat. 48°15′37″N., long. 101°17′13″W.)

Within a 4.2-mile radius of the Minot International Airport and within 3.5 miles each side of the Minot VORTAC 129° radial, extending from the 4.2-mile radius of the airport to 7.0 miles southeast of the VORTAC, and within 3.5 miles each side of the Minot VORTAC 260° radial, extending from the 4.2-mile radius of the airport to 7.0 miles west of the VORTAC, and within 3.5 miles each side of the Minot VORTAC 327° radial, extending from the 4.2-mile radius of the airport to 7.0 miles northwest of the VORTAC, and within 3.5 miles each side of the Minot VORTAC 097° radial, extending from the 4.2-mile radius to 7.0 miles east of the VORTAC, excluding the portion which overlies the Minot AFB, ND, Class D airspace area. This Class E airspace area is effective during the specific dates and times established in advance by a Notice to Airman. The effective date and time will thereafter be continuously published in the Airport/facility Directory.

* * * * *

Issued in Des Plaines, Illinois on February 16, 1999.

David B. Johnson,

Acting Manager, Air Traffic Division.

[FR Doc. 99–5250 Filed 3–2–99; 8:45 am]

BILLING CODE 4910–13–M

CONSUMER PRODUCT SAFETY COMMISSION

16 CFR Parts 1213, 1500, and 1513

Bunk Beds; Notice of Proposed Rulemaking

AGENCY: Consumer Product Safety Commission.

ACTION: Notice of proposed rulemaking.

SUMMARY: The Consumer Product Safety Commission (''CPSC'' or ''Commission'') has reason to believe that unreasonable risks of injury and death are associated with bunk beds that are constructed so that children can become entrapped in the beds' structure or become wedged between the bed and a wall.

This notice proposes a rule mandating bunk bed performance requirements to reduce this hazard. This rule would be issued under both the Federal Hazardous Substances Act (''FHSA''), for bunk beds intended for use by children, and the Consumer Product Safety Act (''CPSA''), for beds not intended for children. The Commission solicits written comments and will provide an opportunity for oral comments from interested persons.

DATE: Written comments in response to this notice must be received by the Commission by May 17, 1999. The Commission will announce an opportunity for oral presentations of comments in a separate **Federal Register** notice to be published later.

ADDRESSES: Written comments, should be mailed, preferably in five copies, to the Office of the Secretary, Consumer Product Safety Commission, Washington, D.C. 20207–0001, or delivered to the Office of the Secretary, Consumer Product Safety Commission, Room 502, 4330 East-West Highway, Bethesda, Maryland; telephone (301) 504–0800. Comments also may be filed by telefacsimile to (301) 504–0127 or by email to cpsc-os@cpsc.gov. Written comments should be captioned ''NPR for Bunk Beds.''

FOR FURTHER INFORMATION CONTACT: Concerning the substance of the proposed rule: John Preston, Directorate for Engineering Sciences, Consumer Product Safety Commission, Washington, D.C. 20207; telephone (301) 504–0494, ext. 1315.

SUPPLEMENTARY INFORMATION:

A. Background; History of Voluntary Standards Activities

Bunk beds have been long recognized as a potential source of serious injury to children. In 1978, an Inter-Industry Bunk Bed Safety Task Group developed a Bunk Bed Safety Guideline for voluntary use by manufacturers and retailers of bunk beds intended for home use. Members of this group included the National Association of Bedding Manufacturers, the National Association of Furniture Manufacturers, the Southern Furniture Manufacturers Association, and the National Home Furnishings Association. The guideline became effective on January 1, 1979.

In February 1981, an American National Standard for Bedding Products and Components (ANSI Z357.1) was published. For the most part, this standard contained dimensional requirements for mattresses and foundations for all beds. However, it also incorporated the requirements of the January 1, 1979, industry safety guideline for bunk beds. In May 1986, the American Furniture Manufacturer's Association (''AFMA'') published Voluntary Bunk Bed Safety Guidelines developed by the Inter-Industry Bunk Bed Committee (''IIBBC'').

On August 26, 1986, the Consumer Federation of America (''CFA'') filed a petition with CPSC requesting the promulgation of a mandatory safety regulation for bunk beds. In its petition, CFA cited three different risks of injury posed by bunk beds: inadequate mattress supports that can allow the mattress to fall to the bunk below or to the floor, entrapment in the space between the guardrails and the mattress, and entrapment between the bed and the wall. CFA alleged that the voluntary industry guidelines did not fully address the hazards posed to consumers.

In July 1988, AFMA published Revised Voluntary Bunk Bed Safety Guidelines, with an effective date of April 1989. A majority of the revisions were made as a result of CPSC staff comments on the May 1986 guidelines, which included comments that the requirements addressing entrapment in openings in guardrails were not adequate and that bunk beds should be required to be sold with two guardrails. To prevent entrapment, the 1989 revised guidelines did require two guardrails to accompany a bunk bed, and required that any opening in the structure of the upper bunk be less than 3½ inches in width.

On July 21, 1988, the Commission voted to deny the petition filed by the CFA, but directed its staff to prepare a letter to AFMA urging that it reconsider the CPSC staff's comments that had not been included in the Revised Voluntary Bunk Bed Safety Guidelines. That letter was sent in August 1988. It also requested (a) that AFMA consider additional staff recommendations, (b) that AFMA submit the revised guidelines to a voluntary standards organization such as ANSI or ASTM for development as a voluntary safety standard, and (c) that AFMA develop, and provide to the Commission, a plan and proposed implementation date for a certification program to ensure that bunk beds comply with the guidelines. AFMA responded that a certification program would be established upon publication of an ASTM bunk bed standard.

In October 1992, ASTM published the Standard Consumer Safety Specification for Bunk Beds, ASTM F1427–92, in response to the Commission's August 1988 request. The performance requirements in that standard primarily addressed falls from the upper bunk, entrapment in the upper bunk structure or between the upper bunk and a wall, and security of the foundation support system. The standard also had a requirement for a warning label and for instructions to accompany the bed. In June 1994, the ASTM bunk bed standard was republished with additional provisions (requested by CPSC staff) to address collapse of tubular metal bunk

beds. The most current version of the ASTM bunk bed standard was published in September 1996 and contains additional revisions suggested by CPSC staff. These address entrapment in lower-bunk end structures; mattress size information on the warning label and carton; and the name and address of the manufacturer, distributor, or seller on the bed. To protect children from entrapment, the ASTM standard requires that:

- There be guardrails on both sides of the upper bunk, except for up to 15 inches at the ends of the bed;
- Openings in the structure surrounding the upper bunk be small enough to prevent passage of a tapered block having a base measuring 3.5 inches by 6.2 inches;
- Openings in the end structures within a height of 9 inches above the sleeping surface of the lower bunk mattress be either small enough to prevent passage of a tapered block having a base measuring 3.5 inches by 6.2 inches or large enough to permit passage of a 9-inch diameter sphere.

Despite these voluntary efforts, the Commission, over the last 4 years, has recalled over one-half million bunk beds that did not conform to the entrapment requirements in the ASTM F1427–96 standard (ASTM standard). Because of continued reports of deaths and other incidents associated with bunk beds, and because of indications there may not be adequate compliance with the voluntary ASTM standard, the CPSC published an advance notice of proposed rulemaking (''ANPR'') to begin a rulemaking proceeding that could result in performance or other standards to address the risk of entrapment associated with bunk beds. 63 FR 3280 (January 22, 1998). The Commission received 418 comments in response to the ANPR.

B. Incident Data

Deaths

From January 1990 through October 23, 1998, CPSC received reports of 89 bunk-bed-related deaths of children under age 15 (see Table 1 below).

TABLE 1—FATAL BUNK BED INCIDENTS REPORTED TO CPSC, BY YEAR AND HAZARD PATTERN

Year	Total	Hazard Pattern		
		En-trap.	Hang-ing	Falls
Total	89	57	24	8
1990	7	5	2	
1991	15	10	2	3
1992	4	3	1	
1993	19	10	7	2
1994	10	6	3	1
1995	12	5	5	2
1996	12	11	1	
1997	8	6	2	
1998	2	1	1	

Source: CPSC data files, January 1990—October 1998.

Of the 89 fatalities, 57 (64%) resulted from entrapment. An additional 24 children died when they inadvertently were hung from the bed by such items as belts, ropes, clothing, and bedding, and eight children died in falls from bunk beds.

As shown in Table 2, over 96% (55 of 57) of those who died in entrapment incidents were age 3 and younger, and all but one were younger than 5. In contrast, almost 80% (19 of 24) of those who died in hanging incidents were age 6 and older. Eight fall-related deaths occurred during this period and involved both pre-school and older victims.

Using statistical methodology, a national estimate of the total annual entrapment deaths was developed. About 10 bunk-bed-related entrapment deaths are estimated to have occurred in the United States each year since 1990.

TABLE 2.—FATAL BUNK BED INCIDENTS REPORTED TO CPSC, BY VICTIM AGE AND HAZARD PATTERN

[January 1990–October 1998]

Age (years)	Total	Hazard pattern		
		En-trap.	Hang-ing	Falls
Total	89	57	24	8
<1	18	16	1	1
1	20	19	1	
2	15	13	1	1
3	8	7		1
4	4	1	1	2
5	1		1	
6	3		3	
7	3	1	2	
8	2		2	

TABLE 2.—FATAL BUNK BED INCIDENTS REPORTED TO CPSC, BY VICTIM AGE AND HAZARD PATTERN—Continued

[January 1990–October 1998]

Age (years)	Total	Hazard pattern		
		En-trap.	Hang-ing	Falls
9	3		2	1
10+	12		10	2

Source: CPSC data files, January 1990–October 1998.

Injuries

From hospital emergency room data reported through the National Electronic Injury Surveillance System (NEISS), the Commission estimates that about 31,400 bunk-bed-related injuries to children under the age of 15 were treated in U.S. hospital emergency rooms during 1997. Almost one-half (43%) of the victims were younger than 5 years. A review of the descriptive comments received for each injury revealed that falls from the bed were involved in almost all cases in which the circumstances were reported. About two percent of the victims were hospitalized. Virtually none of the reported incidents involved entrapment or hanging, which generally results in either death or no injury. With either of these results, the victim is not likely to be taken to an emergency room.

Entrapment Incidents

Entrapment-related incidents, which accounted for the majority of deaths, were reviewed in further detail to provide additional information about the circumstances involved. Both fatal and ''near-miss'' incidents were included. The ''near-miss'' incidents, usually reported through consumer complaints, were those in which a child became entrapped in the bed, often requiring rescue by the parent or caregiver. In these cases, there were generally no injuries or injuries were minor (contusions/abrasions). However, ''near-miss'' incidents were examined because they were judged to have the potential for death or serious injury.

CPSC received reports of at least 13 additional entrapment incidents (3 fatal) since the January 8, 1998 Commission briefing. This results in a total of 116 incidents from January 1990 through October 23, 1998, of which 57 were fatalities and 59 were ''near-misses.'' Table 3 illustrates the location in the bunk bed of the entrapments.

TABLE 3—LOCATION IN BUNK BED OF FATAL AND "NEAR-MISS" ENTRAPMENT INCIDENTS

Location of entrapment	Type of incident		
	Total	Fatal	Near-miss
Total	116	57	59
Top Bunk	74	39	35
Guardrail	48	27	21
Bed/Wall	11	9	2
End Structure	12	1	11
Add-On Rail	1	1	
Other	1		1
Unk.	1	1	
Bottom Bunk	26	12	14
Guardrail	1		1
Bed/Wall	6	6	
End Structure	13	3	10
Add-On Rail	2	2	
Other	4	1	3
Ladder	5	2	3
Unknown Bunk	11	4	7
Guardrail	2		2
Bed/Wall	1	1	
End Structure	4		4
"Safety Rails"	1	1	
Other	1		1
Unk.	2	2	

Source: CPSC data files, January 1990—October 1998.

As shown in Table 3, 74 of the entrapment incidents involved the upper bunk, 26 involved the lower bunk, and 5 involved the ladder. In the incidents where the information was available, it appeared that all but three of the incidents involving fatal entrapment in the structure of bunk beds occurred on beds not meeting the entrapment requirements in the ASTM standard. Of the three incidents involving beds that appeared to conform to the entrapment requirements, two involved entrapment in the upper bunk. In these incidents, an 18-month-old infant and a child who was almost 5 years old slipped through the space between the end of the guardrail and the bed end structure and became wedged between the bed and a wall. In the third incident, a 22-month-old child became entrapped by the head in an opening between the underside of the upper bunk foundation support and a curved structural member in the bunk-bed end structure.

C. Conformance to Entrapment Requirements in ASTM Standard

The CPSC's Compliance staff continues to identify bunk beds that do not comply with the entrapment requirements in the ASTM standard. On every occasion in the past 4 years when the staff has focused on bunk bed conformance, it has located nonconforming beds.

Between November 1994 and September 1997, CPSC's staff worked with 41 manufacturers to recall bunk beds that did not conform to the entrapment requirements in the ASTM standard. The recalls were the result of intensive inspections of bunk bed retailers by the CPSC Field staff and involved over 531,000 bunk beds.

During February and April 1998, CPSC's Field staff visited 55 retail stores in 39 cities and examined 145 bunk bed models from 58 manufacturers. Of these, 23 firms had at least one model of bunk bed that did not conform to the ASTM standard, and 7 of those firms were repeat violators. The staff preliminarily determined that bunk beds made by 7 of the 23 firms presented a substantial product hazard. Two of these firms were out of business, and the other five firms were requested to recall/retrofit their nonconforming bunk beds. A CPSC News Release announcing this recall was issued on November 10, 1998. Sixteen of the 23 firms had nonconforming bunk beds that the staff believed would not present a substantial risk of entrapment. For example, the openings in the structure of the upper bunk bed were only slightly larger than the spacing requirements of the ASTM standard, and a child's torso would not be likely to slip into these openings. However, letters were sent to these firms notifying them of their nonconformance and asking them to correct future production.

Table 4, below, lists the number of beds produced by the five manufacturers whose beds were found to have serious violations of the entrapment requirements in the ASTM standard.

TABLE 4.—NUMBER OF BUNK BEDS SUBJECT TO RECALL

Mfr.	No. of models/ start date	Annual sales	Total sales since start date	Knowledge of ASTM standard
A*	5/1995	8,000	14,477	Yes.[1]
B*	2/1997	2,000	2,463	Yes.[2]

TABLE 4.—NUMBER OF BUNK BEDS SUBJECT TO RECALL—Continued

Mfr.	No. of models/ start date	Annual sales	Total sales since start date	Knowledge of ASTM standard
C	1/1994	150	600	Yes.[3]
D	1/1986	1,500	18,000	No.[4]
E	1/1997	514	1,028	No.[5]
Total		12,164	36,568	

*Repeat Violators
[1] Company recalled several bunk beds in 1995. President of company said he thought the beds conformed.
[2] Company is an importer of beds from Brazil and claimed to have knowledge of the ASTM standard but not with respect to the guardrail issue.
[3] Company was aware of the ASTM standard but claimed to have misinterpreted certain requirements.
[4] Company claimed to have no knowledge of the ASTM standard.
[5] During a 1998 inspection, the plant manager claimed to have no knowledge of the ASTM standard.

Table 4 shows that the 1998 limited retail inspections resulted in the recall of over 36,000 bunk beds. The total annual sales of beds produced by the 58 manufacturers whose beds were examined during the inspections is not known. The table also shows that three of the five manufacturers whose beds were found to have serious entrapment hazards were aware of the existence of the ASTM standard and that two had been previously notified by CPSC that their beds did not conform to the standard.

Since April 1998, the staff has identified 15 more bunk bed makers, and is investigating their products.

At the time the ANPR was issued, the Commission knew of 106 bunk bed manufacturers. As a result of the recent retail inspections of furniture retailers and a search of the Internet, CPSC is now aware of about 160 manufacturers and importers of bunk beds. It is evident from the history of the Commission's efforts to identify nonconforming bunk beds that there are many small firms that enter this market and do not conform to the ASTM standard, either because they are unaware of it or because they do not believe they need to conform because the standard is voluntary.

Based on this extensive experience, the Commission staff believes that it would be able to identify significant numbers of nonconforming beds each year into the foreseeable future. Therefore, the staff believes it is reasonable to conclude that the current degree of conformance with the voluntary standard would begin to fall if CPSC's extraordinary enforcement efforts in this area were cut back and a mandatory standard were not in place.

D. Statutory Authorities for This Proceeding

What Statute is Appropriate for Regulating Bunk Beds?

The Federal Hazardous Substances Act (''FHSA'') authorizes the regulation of unreasonable risks of injury associated with articles intended for use by children that present mechanical (or electrical or thermal) hazards. FHSA § 2(f)(D), 15 U.S.C. 1261(f)(D). The hazards associated with bunk beds that are described above are mechanical. *See* FHSA § 2(s), 15 U.S.C. 1261(s). The Consumer Product Safety Act (''CPSA'') authorizes the regulation of unreasonable risks of injury associated with ''consumer products,'' which include bunk beds—whether intended for the use of children or adults. CPSA § 3(a)(1), 15 U.S.C. § 2052(a)(1).

Thus, bunk beds intended for the use of adults can be regulated only under the CPSA, while bunk beds intended for the use of children potentially could be regulated under either the FHSA or the CPSA. Bunk beds probably would be considered as intended for use by children only if they have smaller than twin-size mattresses or incorporate styling or other features especially intended for use by children. The data available to the Commission's staff do not indicate whether the known deaths and injuries are occurring on beds intended for use by children. Nevertheless, any regulation for bunk beds should include beds intended for children, since there is no reason why such beds, to the extent they exist, do not present the same risks to children as do adults' bunk beds.

Section 30(d) of the CPSA, however, provides that a risk associated with a consumer product that can be reduced to a sufficient extent by action under the FHSA can be regulated under the CPSA only if the Commission, by rule, finds that it is in the public interest to do so. 15 U.S.C. 2079(d). Because the risks of bunk beds can be addressed with the two-pronged approach (*i.e.*, by both statutes), there appears to be no strong reason why it would be in the public interest to regulate bunk beds only under the CPSA. Accordingly, the requirements are proposed as two separate rules, one under the CPSA for ''adult'' bunk beds and the other under the FHSA for beds intended for use by children. The Commission seeks comment on whether there are categories of bunk bed use where the beds will always be used by adults, even after any sale by the original purchaser. If such uses can be identified, the Commission would consider whether bunk beds sold solely for such uses should be exempt from these rules.

What Effect Will the Existence of the Voluntary Standard Have on the Rulemaking?

The Commission may not issue a standard under either the CPSA or the FHSA if an industry has adopted and implemented a voluntary standard to address the risk, unless the Commission finds that ''(i) compliance with such voluntary . . . standard is not likely to result in the elimination or adequate reduction of such risk of injury; or (ii) it is unlikely that there will be substantial compliance with such voluntary . . . standard.'' See 9(f)(3)(D) of the CPSA, 15 U.S.C. 2058(f)(3)(D), and 3(i)2) of the FHSA, 15 U.S.C. 1262(i)(2). The percentage of currently produced bunk beds that conform to the ASTM standard could be as high as 90% or more. This raises the questions of whether the ASTM standard is substantively adequate and, if so, whether it will command ''substantial compliance.''

The proposed rule goes beyond the provisions of the ASTM voluntary standard. First, it eliminates the voluntary standard's option to have an opening of up to 15 inches at each end of the wall-side guardrail. Second, the voluntary standard protects against entrapment only within the 9-inch space immediately above the upper surface of the lower bunk's mattress. The mandatory standard extends this area of protection upward to the level of the underside of the upper bunk foundation. Both of these provisions, which are in the proposed rule but not

in the voluntary standard, address fatalities and, as noted below, have benefits that bear a reasonable relationship to their costs. Furthermore, the absence of any identification of the manufacturer on many beds has resulted in extremely low recall effectiveness rates. The proposed mandatory standard requires that the name and address of the manufacturer, distributor, or retailer be on the beds.

Therefore, the Commission preliminarily finds that compliance with the voluntary standard would not be likely to result in the elimination or adequate reduction of the risk of entrapment injury or death. For this reason, the voluntary standard would not bar the proposed rule. If the ASTM standard were substantively adequate, the Commission would be required to make a finding on substantial compliance.

Neither the CPSA nor the FHSA define ''substantial compliance.'' In dealing with this issue as it applies to bunk beds, the Office of General Counsel reviewed the Commission's past actions and statements dealing with the meaning of ''substantial compliance,'' and reviewed the appropriate legislative history. The Office of General Counsel has proffered the opinion that substantial compliance does not exist where there is a reasonable basis for concluding that a mandatory rule would achieve a higher degree of compliance. The Office of General Counsel maintains that two key, although not necessarily exclusive, considerations in making this determination are (1) whether, as complied with, the voluntary standard would achieve virtually the same degree of injury reduction that a mandatory standard would achieve and (2) that the injury reduction will be achieved in a timely manner.

For the reasons explained in Section E of this notice, the Commission staff believes that a mandatory standard will be more effective in reducing entrapment deaths from bunk beds than will the voluntary standard. Therefore, the staff believes there is not substantial compliance with the voluntary standard, which consequently does not bar issuing the proposed rule.

The Office of General Counsel further states that this finding here does not mean that the Commission would conclude that a mandatory standard will always be more effective than a voluntary standard. Each case must be considered on its own facts. Moreover, even if there is insufficient compliance with a voluntary standard, neither the CPSA nor the FHSA would compel the Commission to regulate.

The Commission takes no position on this interpretation of substantial compliance at this time. The Commission encourages all persons who would be affected by such an interpretation to submit comments for the record.

The Office of Compliance has also enumerated certain other factors which it feels impact the level of conformance with the voluntary standard. These are addressed in Section E below. The Commission reserves judgment on the propriety of considering these factors in measuring substantial compliance and seeks public comments on them. Also note the draft findings with regard to substantial compliance in the text of the proposed rules themselves, which the Commission includes in order to elicit the most effective public comment.

E. The Potential Need for a Mandatory Standard

In deciding to propose this rule, the Commission considered carefully the particular characteristics of the bunk bed industry. This industry is highly diverse and fragmented, with differing levels of sophistication relating to product safety. Firms can easily enter and leave the bunk bed manufacturing business. The Commission has identified about 160 manufacturers of bunk beds—a 50% increase since the Commission considered the ANPR. The Office of Compliance maintains that this fragmentation and diversity contributes to difficulties in achieving more complete compliance with the voluntary standard. Because it is difficult to identify all firms in the industry, Compliance indicates it is difficult for voluntary standards organizations and trade associations to conduct outreach and education efforts regarding the voluntary standard. By contrast, in industries with a small number of firms, it is easier to find the firms and educate them about the existence and importance of voluntary standards. Mandatory standards—codified in the accessible Code of Federal Regulations—are easier to locate, and their significance is more obvious.

These generalizations about the industry found support in the staff's enforcement experience. Some manufacturers contacted by Compliance did not see an urgency to comply with a ''voluntary'' standard, and they did not recognize the hazards associated with noncompliance. Other manufacturers were not even aware of the standard. As a result, entrapment hazards will continue to exist on beds in use and for sale.

Compliance maintains that a mandatory standard would also reduce the staff's workload in ensuring that children are not exposed to bunk beds presenting entrapment hazards. In the past several years, the staff has expended significant resources to obtain the current level of conformance to the ASTM standard. If the Commission issues a mandatory standard, Compliance expects that fewer resources would be required to enforce the standard than are currently being used to identify defective bunk beds.

For the foregoing reasons, Compliance believes that a mandatory bunk bed entrapment standard may be needed and could bring the following benefits:

1. A mandatory standard could increase the awareness and sense of urgency of manufacturers in this industry regarding compliance with the entrapment provisions, thereby increasing the degree of conformance to those provisions.

2. A mandatory standard would allow the Commission to seek penalties for violations. Publicizing fines for noncompliance with a mandatory standard would deter other manufacturers from making noncomplying beds.

3. A mandatory standard would allow state and local officials to assist CPSC staff in identifying noncomplying bunk beds and take action to prevent the sale of these beds.

4. Under a mandatory standard, retailers and distributors would violate the law if they sold noncomplying bunk beds. Retailers and retail associations would then insist that manufacturers and importers provide complying bunk beds.

5. The bunk bed industry is extremely competitive. Manufacturers who now conform to the ASTM standard have expressed concern about those firms that do not. Nonconforming beds can undercut the cost of conforming beds. A mandatory standard would take away any competitive cost advantage for unsafe beds.

6. A mandatory standard would help prevent noncomplying beds made by foreign manufacturers from entering the United States. CPSC could use the resources of the U.S. Customs Service to assist in stopping hazardous beds at the docks.

7. The absence of manufacturer identification on many beds has resulted in extremely low recall effectiveness rates. The proposed standard would require companies to include their identity on the beds.

8. Although the Commission currently believes that the ASTM voluntary standard for bunk beds adequately addresses the most common entrapment hazards associated with these products,

the Commission is aware of three entrapment fatalities that occurred in conforming beds. A mandatory standard could modify the provisions in the voluntary standard so as to address the entrapment deaths that can occur on beds that comply with the voluntary standard.

Therefore, the Commission decided to issue an NPR to seek public comment on the proposed rule.

However, the available information does not support a conclusion that changes to currently produced bunk beds would significantly reduce the number of fatalities due to falls and hangings. Thus, the Commission is not proposing performance requirements to address falls or hangings from bunk beds at this time.

F. Rulemaking Procedure

The Commission intends to issue the requirements they would apply to bunk beds not intended for use by children as a consumer product safety standard under the CPSA. This requires a finding that the requirements are reasonably necessary to eliminate or adequately reduce an unreasonable risk of injury presented by bunk beds. This and other required findings are discussed in the proposed rule.

Bunk beds intended for the use of children will be regulated by a determination under FHSA Section 3(a)(1) that bunk beds that do not comply with the proposed rule present mechanical hazards, as provided in FHSA Section 3(a)(1), and are thus hazardous substances. See FHSA Sections 2(f)(1)(D) and 2(s). Under the FHSA, a product that is a hazardous substance and intended for use by children is banned. FHSA Section 2(q)(1). Other required finding are discussed in the proposed FHSA rule.

Before adopting a CPSA standard or FHSA rule, the Commission first must issue an ANPR as provided in section 3(f) of the FHSA or section 9(a) of the CPSA. 15 U.S.C. 1262(f), 2058(a). For bunk beds, the Commission issued an ANPR on January 22, 1998. 63 FR 3280. If the Commission continues with a proposed rule, the Commission must publish the text of the proposed rule, along with a preliminary regulatory analysis, in accordance with section 3(h) of the FHSA or section 9(c) of the CPSA. 15 U.S.C. 1262(h), 2058(c). If the Commission then issues a final rule, it must publish the text of the final rule and a final regulatory analysis that includes the elements stated in 3(i)(1) of the FHSA or section 9(f)(2) of the CPSA. 15 U.S.C. 1262(i)(1), 2058(f)(2). Before issuing a final regulation, the Commission must make certain statutory findings concerning voluntary standards, the relationship of the costs and benefits of the rule, and the burden imposed by the regulation. FHSA § 3(i)(2), 15 U.S.C. 1262(i)(2); CPSC § 9(f)(3), 15 U.S.C. 2058(f)(3).

G. Response to Comments on the ANPR

The Commission received 418 comments in response to the ANPR for bunk beds. Of these, 396 commenters favored a mandatory rule, 19 opposed such a rule, and three expressed no opinion on whether they favored a mandatory rule.

Of the 396 commenters who favored a mandatory rule, 355 submitted a form letter stating:

> If one child dies due to unsafe bunk bed design and manufacture this questions whether voluntary standards in the industry are sufficient to protect our children. Due to the fact that there were more than 45 fatalities and over 100,000 injuries from 1990 to 1995, I feel that is overwhelming evidence that mandatory standards *must* be passed to insure that this tragedy does not strike another American family.

Forty-four comments were received from students at the University of Tennessee School of Law. Twenty-eight of the students favored a mandatory rule, 15 opposed such a rule, and one expressed no opinion on this issue.

1. Issue: Guardrails. Thirteen commenters suggested eliminating the allowable 15-inch openings in the guardrail on the wall side of an upper bunk, to address the two entrapment deaths that occurred on conforming beds. In those instances, a child age 18 months and another almost 5 years old slipped through openings at the end of the guardrail and became entrapped between the bed and a wall. Six comments from proponents of a mandatory rule suggested that it should address falls from the upper bunk with more stringent requirements than are in the current ASTM standard. Although most commenters expressing this view did not suggest specific provisions to address falls, some felt that eliminating the 15-inch openings between the ends of the upper bunk guardrails and the bed end structures that are permitted by the current ASTM standard may reduce the likelihood of falls.

Response. CPSC agrees with the 13 commenters who suggested eliminating the 15-inch-wide openings between ends of guardrails and bed end structures on the *wall* side of the upper bunk to minimize the likelihood of entrapment between the upper bunk of the bed and a wall. Accordingly, the proposed rule requires a side guardrail on one side of the upper bunk to extend continuously between the end structures.

In most cases, incident data do not reveal the precise cause of falls from the upper bunk. Some reports stated that the fall was associated with the use of the bunk's ladder but did not state whether the ladder could be accessed through an opening in the guardrail or whether it could only be reached by climbing over a continuous guardrail or over the end structure of the upper bunk. It is possible that having to climb over the guardrail or end structure to get on or off the ladder could increase the incidence of falls. Since the CPSC cannot determine whether continuous guardrails on both sides of the upper bunk would significantly affect the likelihood of a fall, such a requirement is not included in the proposed rule.

2. Issue: Lower bunk end structures. Seven commenters suggested that a mandatory rule should include the lower bunk entrapment criteria that are in the ASTM standard but should apply them to the entire end structure below the level of the upper bunk mattress support system. Such a requirement would address a fatal incident that occurred on a bed conforming to the current ASTM standard. That incident involved a 22-month-old child who was entrapped by the head in an opening between the underside of the upper bunk foundation support and a curved structural member in the bed end structure. The current ASTM standard has lower-bunk entrapment requirements that apply only to the portion of the end structure that is between the level of the lower bunk mattress support system and a level that is 9 inches above the sleeping surface of the lower bunk (when it is equipped with a mattress having the maximum thickness recommended by the manufacturer).

Response: The Commission agrees with these commenters, and the proposed rule contains a requirement addressing entrapment in lower bunk bed end structures that is similar to that in the ASTM standard but applies to the entire portion of the bed's end structures that extends between the upper side of the foundation of the lower bunk and the underside of the foundation of the upper bunk. While this may require a change in the design of the end structures of some bunk beds, the Commission believes that the cost would be small.

3. Issue: Young children and public awareness: Sixteen commenters noted that a majority of the entrapment deaths involved very young children, who should not be placed on an upper bunk. These commenters were about equally

divided between proponents and opponents of a mandatory rule. Voicing concern that the parents of the victims were probably unaware of the hazard of placing these young children on the upper bunk, they suggested that the Commission could join with the American Furniture Manufacturers Association (AFMA) in mounting a public awareness campaign. AFMA represents manufacturers of bunk beds.

Response: The first bunk bed safety guideline became effective in 1979 and required a label which, among other warnings, stated ''Prohibit children under 6 years on upper bunk.'' The current (1996) ASTM standard also bears a similar statement. For almost 20 years, bunk beds conforming to the applicable safety guideline or voluntary standard have warned against placing children under 6 years old on the upper bunk, yet consumers continue this practice. The proposed rule also contains a requirement for a warning label. However, the Commission believes that the most effective way to address entrapment is to design the bed so that it does not present this hazard to children under 6 years of age because some parents would continue to place their young children on the upper bunk.

4. Issue: Retailer tests. A furniture retailer submitted comments opposing a mandatory rule on the grounds that:

- The number of injuries associated with bunk bed entrapment are minimal [, and,]
- For [its own] protection, a retailer would be required to engage in [its] own testing, thereby dramatically increasing the price [of a bunk bed] to the customer.

Response: While entrapment generally does not result in an injury requiring medical attention, it is the leading cause of death associated with bunk beds, and the proposed rule is primarily intended to address entrapment fatalities. The Commission does not agree that a mandatory rule would force retailers to incur the cost of having bunk beds tested. If retailers are concerned that manufacturers may claim conformance when in fact their products do not conform, the tests in the proposed rule are simple enough that retailers easily could check for conformance themselves.

5. Issue: Installation and bedding choice. The same furniture retailer argues that a mandatory standard ignores major contributing factors to bunk bed accidents, i.e., consumer installation and consumer bedding choice.

Response: CPSC is not aware of any incidents resulting from improper consumer assembly or from an incorrect choice of bedding.

6. Issue: Degree of voluntary conformance. A trade association and the organization ''Consumer Alert'' question the legality of a rulemaking proceeding in light of the Commission's estimate of the current conformance to the ASTM standard.

Response: See Section D of this notice.

7. Third-party certification as an alternative. An independent testing laboratory that currently operates a third-party certification program stated that they believe that such a certification program indicating conformance to the ASTM standard would be more productive than a mandatory rule. The laboratory suggested that CPSC could recognize the certification program and encourage manufacturers to join it as CPSC presently does for seven juvenile products' certification programs.

Response. The Commission does not believe that recognition of a third-party certification program would have a significant effect on the degree of conformance to the ASTM standard, because the firms that have been found to be in violation of the entrapment provision in the standard are small and are not likely to participate.

H. Preliminary Regulatory Analysis

Introduction

The CPSA and FHSA require the Commission to publish a preliminary regulatory analysis of the proposed rule and reasonable alternatives. This includes a discussion of the likely benefits and costs of the proposed rule and its reasonable alternatives. The Commission's preliminary regulatory analysis is set forth below.

Product and Market Information

Bunk beds are essentially stackable twin beds, with wood or metal frames. Some models now incorporate a lower double bed with a twin upper. The Commission notes that the definition of bunk bed in the proposed rule is based on the definition in the ASTM standard. That definition states that a bunk bed is a bed in which the underside of the foundation is over 30 inches from the floor. This does not require that there be a second stackable mattress and foundation. The Commission requests comments on whether the rule should be limited to beds with more than one foundation.

The retail prices of these products range from $100 to $700; manufacturers estimate the average retail price of a bunk bed at $300. According to AFMA, which represents manufacturers of bunk beds, forty firms, which are either AFMA members or members of the existing ASTM bunk bed subcommittee, account for about 75–80% of total annual sales of bunk beds. At the time the ANPR was issued, the Commission knew of 106 manufacturers of bunk beds, including the 40 AFMA or ASTM members. Staff is now aware of about 160 firms manufacturing bunk beds. The share of the market accounted for by the other non-AFMA/ASTM firms is not known, but is believed to account for a large portion of the remaining 20–25% of the market. Additionally, there are likely other firms unknown to CPSC that are producing bunk beds.

Industry sources estimate that about 500,000 bunk beds are sold annually, and that the expected useful life of bunk beds is 13 to 17 years. Based on the CPSC's Product Population Model (a computer model which estimates how many of a particular product are in use at a given time), there may be some 7–9 million bunk beds available for use; this includes beds to which children are not exposed and beds which are not stacked.

Historically, imports have accounted for only a small part of the U.S. market for bunk beds. This is due in large part to the shipping cost relative to price. Since bunk beds can be shipped unassembled and mated to U.S.-made mattresses, there is a small number of imported bunk beds sold in the United States. AFMA spokesmen report that there are no data on the extent of such imports. However, AFMA indicated that imports of bunk beds by its members appear to be increasing.

Conformance With the Existing Voluntary Standard

The Commission's Compliance staff has reported that all 40 firms that either are members of AFMA or have ASTM standing produce bunk beds that are in conformance with the existing voluntary standard. The staff has examined the products of and/or contacted the remaining firms known to be producing bunk beds. Subsequently, the staff worked with the manufacturers of beds that did not comply with the voluntary standard to implement a number of corrective actions, including recalls. Since then, all of the beds produced by these firms have been in conformance.

The extent of conformance to the voluntary bunk-bed standard since 1979 (the initial year industry guidelines were available) is not known with precision. However, based on its knowledge of industry practices, CPSC's Engineering Sciences staff estimates that roughly 50% of production from 1979 to

1986 conformed to the voluntary standard's upper-bunk entrapment requirements. This rough estimate is based in part on the fact that, although the guidelines were available during this period, even some firms represented on the ASTM standards committee did not follow them.

The industry publicized the availability of guidelines in 1986, and CPSC staff became more heavily involved in the standards process. The CPSC believes that the publication of these guidelines and CPSC staff involvement raised industry awareness of the existence and importance of the voluntary standard. Accordingly, conformance may have increased to perhaps 75% of production from 1986 to 1992. In 1992, ASTM published its bunk bed standard, and CPSC began to monitor products for conformance to that standard. Therefore, for purposes of the cost/benefit analysis, we assume that 90% of production since 1992 may conform to the ASTM standard.

Many of the bunk beds produced in the early to mid-1980's, which may not have been in conformance to the standard, have reached the end of their average expected useful lives and are probably no longer in use. Therefore, although the Commission cannot precisely estimate what proportion of bunk beds in current use conforms to the voluntary standard, the percentage likely falls between 50 and 90%. Assuming a ''conforming'' range between these extremes, on the order of from 70 to 85%, some 15 to 30% of bunk beds in use since the early 1990's do not conform to the ASTM voluntary standard for upper bunk entrapment.

Potential Costs of Proposed Rule

(1) Introduction

The costs associated with the proposed rule would include the cost of compliance for any firms not now conforming to the voluntary standard, and the cost of any Commission-added requirements in the final mandatory rule.

(2) Costs of Mandating ASTM's Requirements

In order to provide some preliminary information regarding these costs, CPSC Economics staff contacted four manufacturers that had modified their production to conform to the standard. Two of these manufacturers stated that the cost of additional materials needed to provide ASTM entrapment protection was nominal compared to the overall materials costs, and that redesign costs would not be significant on a per-unit basis. They estimated that the addition of a second guardrail to the upper bunk added $15–20 to the retail price of a bed. The two other manufacturers, marketing bunk beds in the ''mid to upper'' price range, estimated that the addition of the second guardrail resulted in a $30–40 per bed increase in the retail price. Thus, the overall retail price increase range is estimated to be from $15 to $40 per bed. Only those firms that do not conform to the voluntary standard would be affected.

Potential Benefits of Mandating ASTM's Requirements

The proposed rule is intended to address the risk of entrapment deaths of children from bunk beds. The potential benefits would be the decrease in these entrapment deaths. Avoidance of other incidents (such as near-entrapments) do not contribute significantly to the monetized benefits, because they generally produce no or only minor injuries. All of the known deaths involved children age 7 or younger.

The expected societal costs of bunk bed entrapment deaths represent the potential benefits of preventing them. There were 39 entrapment deaths associated with the upper bunk that were reported to the CPSC from January 1990 through mid-October 1998. Based on a review of the circumstances of the reports by the CPSC's Engineering and Epidemiology staff, the Commission concludes that the voluntary standard would have addressed at least 37 of the 39 upper-bunk entrapment deaths. Additionally, the standard would have addressed two of the three lower-bunk entrapment deaths that occurred in the bed end structures. Nationally, CPSC staff projected that about 10 (95% confidence interval, 6.0 to 14.4) bunk bed entrapment fatalities occurred annually since 1990. Altogether, the Commission believes that the voluntary standard would have addressed 68% of the reported fatalities due to entrapment in all locations (39 ÷ 57). Therefore, the voluntary standard could have addressed an estimated 7 deaths (10 × .68) per year.

In order to determine the expected benefits of the proposed rule, it is necessary to know the risk of death through bunk bed entrapment, defined as ''deaths per nonconforming bunk bed,'' and the expected reduction in risk. The risk level computation requires information on the number of bunk beds that were in use over the period of reported fatalities. The risk reduction factor depends on the effectiveness level of the standard.

The midpoint of the estimated number of bunk beds in use is 8 million units. If 15–30% of bunk beds that were in use did not conform to the standard, as estimated above, then fatalities may be assumed to have been spread over an estimated 1.2 to 2.4 million nonconforming beds (0.15 to 0.30,×8 million). Therefore, the risk of a fatal entrapment that the voluntary standard's provisions could address is from 2.9 to 5.8 deaths per million nonconforming beds (7÷2.4 to 7÷1.2). At an assumed societal cost of $5 million per death, the annual societal value of averting all such fatalities is from about $15 to $30 per bed per year (3 deaths per million nonconforming beds×$5 million, at the lower end of the range, to 6 deaths per million beds×$5 million, at the upper end).

If we assume a useful life of 15 years for a bunk bed and a discount rate of 3%, the estimated present value of averting the entrapment fatalities addressed by the voluntary standard ranges from about $175 to $350 per bed. This is the total potential benefit of averting the risk of death from a nonconforming bed over its useful life.

Comparison of Costs and Benefits of Compliance With ASTM's Requirements

The expected net benefits of a mandatory standard containing only the entrapment provisions of the ASTM standard depend upon the costs of the standard for each otherwise noncomplying bed ($15 to $40), the societal costs of the deaths addressed by the standard for each noncomplying bed ($175 to $350), and the effectiveness of the standard in reducing deaths. If the standard were fully effective (i.e., if it prevents all of the deaths addressed), the benefits would be much higher than the costs of implementing the standard. In fact, the net benefits per otherwise noncomplying bed, over its expected product life, would range from a low of $135 ($175–$40) to a high of $335 ($350–$15). Thus, the benefits of these provisions are about 4–23 times their costs. CPSC's Engineering staff has concluded that all of the entrapment incidents addressed by the requirements of the proposed standard would have been averted had those beds been in conformance. Thus, a mandatory standard is expected to be highly effective.

The number of nonconforming bunk beds produced annually is not known with precision. Industry sources estimated that there may be as many as 50,000 nonconforming units produced each year. If this estimate is used, the net benefits to society of the proposed rule (if fully effective and all non-conforming beds were made to comply) would be about $6.75 to $16.75 million per year (50,000×$135 to 50,000×$335).

If the standard were less than 100% effective, or if all nonconforming beds were not made to comply, the aggregate expected benefits would be proportionately less.

Costs and Benefits of Additional Requirements

As discussed below, the Commission is also aware of entrapment deaths on the upper bunk and lower bunk, in scenarios not addressed by the voluntary standard. To address these deaths, the proposed mandatory standard includes requirements for a continuous guardrail for the entire wall side of the upper bunk, and modifications of the lower bunk structure. CPSC staff concluded that these modifications would have averted these remaining entrapment deaths.

(a) Continuous guardrail. The Commission is proposing a requirement for a continuous guardrail along the entire wall side of the bed; the current voluntary standard allows a 15-inch gap at either end of the wall side guardrail. The continuous guardrail would address two entrapment deaths that occurred between the bed and the wall in the area of a gap in the guardrail during the 105-month study period of January 1990 through mid-October 1998. This should prevent about 0.23 deaths per year (2÷8.75 years).

Trade sources indicated that perhaps 50–75% of all bunk beds in use during the January 1990-May 1998 period contained this gap; if this percentage range is used, then some 4–6 million beds with the gap would have been in use for each of the years in the study period. Consequently, over that period of time, there were from 0.04 deaths per million nonconforming beds per year (0.23÷6) to 0.06 deaths per million nonconforming beds per year (0.23÷4). Assuming a cost of $5 million per death, the staff estimated the present value of eliminating these gaps at $2.40 to $3.50 over the life of each bed that otherwise would have had a gap in the wall-side guardrail.

The precise cost of eliminating the allowance of a 15-inch gap in the guardrail for the wall side of the upper bunk is unknown. However, the Commission estimates that the cost of materials to extend one guardrail an additional 30 inches (for those bunk beds which incorporated up to a 15-inch gap on both ends of the wall-side guardrail) would be less than the estimated benefits ($2.40 to $3.50 per noncomplying bed).

(b) Lower bunk end structures. The Commission is aware of one death over the past 8 years involving entrapment in the end structures of the lower bunk, occurring in a scenario not currently addressed by the voluntary standard. Addressing this death would result in costs associated with redesigning the bed so that the end structures will not allow the free passage of a wedge block (approximating the size of a child's body) unless it also allows the free passage of a 9-inch sphere (approximating the child's head). The precise potential cost of reconfiguring the bunk end structures is unknown, since the Commission does not know how many models would require such rework. Based on some known noncomplying beds, however, the Commission believes that, for some bunk beds, materials costs may decrease since less material may be required to comply with these requirements than are currently being used. Thus, the Commission expects the costs of this requirement to be design-related. Costs to redesign the end structures, where necessary, will be modest and, in any event, can be amortized over the total subsequent production of the beds. If these one-time design costs are amortized over the entire production run for these bunks, the estimated costs are likely to be small. Therefore, the major portion of the costs imposed by the rule will fall only on those firms that do not currently comply with the voluntary standard.

(c) Effect on market. The small additional costs from any required wall guardrail and end structure modifications are not expected to affect the market for bunk beds, either alone or added to the costs of compliance to ASTM's provision.

Alternatives. The Commission considered two alternatives to the proposed rule.

(a) Defer to the voluntary standard. One alternative to a mandatory rule would be to decide that a mandatory regulation is not necessary, because the current standard addresses about 70% of reported entrapment hazards over the past 8 years. If there is no mandatory action, then no costs would be imposed and no deaths would be averted involving future nonconforming bunk beds.

A variation on this alternative was raised by a commenter, who suggested that bunk beds which conform to the voluntary standard should be so labeled. Consumers could then compare conforming and nonconforming beds at the point of purchase and make their purchase decisions with this safety information in mind. This, however, would not necessarily reduce injuries, because consumers likely do not know there is a voluntary standard and thus would not see any risk in purchasing a bed that was not labeled as conforming to the standard.

(b) Third-party certification. The Commission could have decided to defer to the voluntary standard and, in addition, to encourage third-party testing to the ASTM standard.

This alternative also would not likely prevent the deaths from entrapment that could be prevented by a mandatory rule. Firms that are too small and regional to appreciate the importance of complying with the voluntary standard are unlikely to volunteer to obtain third-party certification that their products comply with that standard. In addition, the costs of third-party certification would deter many small firms from using this alternative. Furthermore, small firms especially might be reluctant to pay for third-party certification when compliance with the entrapment provisions of the voluntary standard can easily be determined by the manufacturer.

I. Regulatory Flexibility Act

The Commission is required by the Regulatory Flexibility Act of 1980 (''RFA'') to address and give particular attention to the economic effects of the proposed rule on small businesses.

The precise number of firms manufacturing bunk beds is not now known. The Commission staff has identified about 160 firms that have produced bunk beds: these were identified through the trade association, national and regional trade shows, industry contacts, the Internet, and retail inspections. Small Business Administration (''SBA'') guidelines classify firms in the furniture production industry as small if they have less than 500 employees, are independently owned, and are not dominant in the field. Most of these firms would be classified as small businesses under SBA's criteria. It is likely that there are additional firms which produce relatively small numbers of bunk beds annually. These remaining producers are also likely to be small businesses.

Even though there is a substantial number of small firms, the Commission does not expect that there will be a significant effect on these firms. As noted earlier, all of the 160 firms identified by the Commission already conform to the existing voluntary standard (some only after CPSC recall activity). Moreover, it is unlikely that the effects on any firms that have not been identified and that do not currently conform would be significant. For firms not conforming, the requirements are expected to increase

retail prices by about 5 to 15%, which likely would be passed on to consumers.

The mandatory standard would not require third-party testing. It is anticipated that the firms would self-certify that their products were in compliance with the mandatory standard. There would be no reporting or recordkeeping requirements under the proposed standard. The Commission is unaware of any Federal rules that would duplicate, or overlap or conflict with, the proposed rule.

J. Preliminary Environmental Assessment

The proposed rule is not expected to have a significant effect on the materials used in the production and packaging of bunk beds, or in the number of units discarded after the rule becomes effective. Therefore, no significant environmental effects would result from the proposed mandatory rule for bunk beds.

K. Executive Orders

This proposed rule has been evaluated in accordance with Executive Order No. 13,083, and the rule raises no substantial federalism concerns.

Executive Order No. 12,988 requires agencies to state the preemptive effect, if any, to be given the regulation. The preemptive effects of these rules is established by Section 26 of the CPSA, 15 U.S.C. 2075, and Section 18 of the FHSA. Section 26(a) of the CPSA states:

> (a) Whenever a consumer product safety standard under [the CPSA] applies to a risk of injury associated with a consumer product, no State or political subdivision of a State shall have any authority either to establish or continue in effect any provision of a safety standard or regulation which prescribed any requirements as to the performance, composition, contents, design, finish, construction, packaging, or labeling of such products which are designed to deal with the same risk of injury associated with such consumer product, unless such requirements are identical to the requirements of the Federal standard.

Subsection (b) of 15 U.S.C. 2075 provides a circumstance under which subsection (a) does not prevent the Federal Government or the government of any State or political subdivision of a State from establishing or continuing in effect a safety standard applicable to a consumer product for its own [governmental] use, and which is not identical to the consumer product safety standard applicable to the product under the CPSA. This occurs if the Federal, State, or political subdivision requirement provides a higher degree of protection from such risk of injury than the consumer product safety standard.

Subsection (c) of 15 U.S.C. 2075 authorizes a State or a political subdivision of a State to request an exemption from the preemptive effect of a consumer product safety standard. The Commission may grant such a request, by rule, where the State or political subdivision standard or regulation (1) provides a significantly higher degree of protection from such risk of injury than does the consumer product safety standard and (2) does not unduly burden interstate commerce.

Similar preemption provisions are in the FHSA. See FHSA Section 18(b), 15 U.S.C. 1261 note.

L. Extension of Time To Issue Final Rule Under the CPSA

Section 9(d)(1) of the CPSA, 15 U.S.C. 2058(d)(1), provides that a final consumer product safety rule must be published within 60 days of publication of the proposed rule unless the Commission extends the 60-day period for good cause and publishes its reasons for the extension in the **Federal Register**.

Executive Order No. 12,662, which implements the United States-Canada Free-Trade Implementation Act, provides that publication of standards-related measures shall ordinarily be at least 75 days before the comment due date. Accordingly, the Commission provided a comment period of 75 days for this proposal.

After the comment period ends, the CPSC's staff will need to prepare draft responses to the comments, along with a draft regulatory analysis and either a draft regulatory flexibility analysis or a draft finding of no substantial impact on a significant number of small entities. Then the staff will prepare a briefing package for the Commission. The Commission is likely to then be briefed, and will later vote on whether to issue a final rule. The Commission expects that this additional work will take about 12 months. Accordingly, the Commission extends the time by which it must either issue a final CPSA rule or withdraw the NPR until March 3, 2000. If necessary, this date may be further extended.

List of Subjects in 16 CFR Parts 1213, 1500 and 1513.

Consumer protection, Infants and children.

Effective Date

The Commission proposes that the rule become effective 180 days after publication of the final rule. This period will allow manufacturers to make any changes in their production needed to comply with the standard without unduly delaying the safety benefits expected from the rule.

For the reasons set out in the preamble, the Commission proposes to amend Title 16, Chapter II, Subchapters B and C, of the Code of Federal Regulations as set forth below.

1. A new Part 1213 is added to Subchapter B, to read as follows:

PART 1213—SAFETY STANDARD FOR ENTRAPMENT HAZARDS IN BUNK BEDS

Sec.
1213.1 Scope, application, and effective date.
1213.2 Definitions.
1213.3 Requirements.
1213.4 Test methods.
1213.5 Marking and labeling.
1213.6 Instructions.
1213.7 Findings.

Figure 1 to Part 1213—Wedge Block for Tests

Authority: 15 U.S.C. 2056, 2058.

§ 1213.1 Scope, application, and effective date.

This part 1213, a consumer product safety standard, prescribes requirements for bunk beds to reduce or eliminate the risk that children will die or be injured from being trapped between the upper bunk and the wall, in openings below guardrails, or in other structures in the bed. The standard in this part applies to all bunk beds sold for residential use that are manufactured in the United States, or imported, after [the effective date of the final rule]. Bunk beds intended for use by children are subject to the requirements in 16 CFR 1500.18(a)(18) and 16 CFR part 1513, and not to this part 1213. However, those regulations are substantively identical to the requirements in this part 1213.

§ 1213.2 Definitions.

As used in this part 1213:

(a) *Bed.* See Bunk bed.

(b) *Bed end structure* means an upright unit at the head and foot of the bed to which the side rails attach.

(c) *Bunk bed* means a bed in which the underside of any foundation is over 30 inches (760 mm) from the floor.

(d) *Foundation* means the base or support on which a mattress rests.

(e) *Guardrail* means a rail or guard on a side of the upper bunk to prevent a sleeping occupant from falling or rolling out.

§ 1213.3 Requirements.

(a) *Guardrails.* (1) Any bunk bed shall provide at least two guardrails, at least one on each side of the bed.

(2) One guardrail shall be continuous between each of the bed's end

structures. The other guardrail may terminate before reaching the bed's end structures, providing there is no more than 15 inches (380 mm) between either end of the guardrail and the nearest bed end structures.

(3) For bunk beds designed to have a ladder attached to one side of the bed, the continuous guardrail shall be on the other side of the bed.

(4) Guardrails shall be attached so that they cannot be removed without either intentionally releasing a fastening device or applying forces sequentially in different directions.

(5) The upper edge of the guardrails shall be no less than 5 inches (130 mm) above the top surface of the mattress when a mattress of the maximum thickness specified by the bed manufacturer's instructions is on the bed.

(6) With no mattress on the bed, there shall be no openings in the structure between the lower edge of the uppermost member of the guardrail and the underside of the upper bunk's foundation that would permit passage of the wedge block shown in Fig. 1 when tested in accordance with the procedure at § 1213.4(a).

(b) *Bed end structures.* (1) The upper edge of the upper bunk end structures shall be at least 5 inches (130 mm) above the top surface of the mattress for at least 50 percent of the distance between the two posts at the head and foot of the upper bunk when a mattress and foundation of the maximum thickness specified by the manufacturer's instructions is on the bed.

(2) With no mattress on the bed, there shall be no openings in the end structures above the foundation of the upper bunk that will permit the free passage of the wedge block shown in Fig. 1 when tested in accordance with the procedure at § 1213.4(b).

(3) When tested in accordance with § 1213.4(c), there shall be no openings in the end structures between the underside of the foundation of the upper bunk and upper side of the foundation of the lower bunk that will permit the free passage of the wedge block shown in Fig. 1, unless the openings are also large enough to permit the free passage of a 9-inch (230-mm) diameter rigid sphere.

§ 1213.4 Test methods.

(a) *Guardrails* (see § 1213.3(a)(6)). With no mattress on the bed, place the wedge block shown in Fig. 1, tapered side first, into each opening in the bed structure below the lower edge of the uppermost member of the guardrail and above the underside of the upper bunk's foundation. Orient the block so that it is most likely to pass through the opening (e.g., the major axis of the block parallel to the major axis of the opening) (''most adverse orientation''). Then gradually apply a 33-lbf (147-N) force in a direction perpendicular to the plane of the large end of the block. Sustain the force for 1 minute.

(b) *Upper bunk end structure* (see § 1213.3(b)(2)). Without a mattress or foundation on the upper bunk, place the wedge block shown in Fig. 1 into each opening, tapered side first, and in the most adverse orientation. Determine if the wedge block can pass freely through the opening.

(c) *Lower bunk end structure* (see § 1213.3(b)(3)). (1) Without a mattress or foundation on the lower bunk, place the wedge block shown in Fig. 1, tapered side first, into each opening in the lower bunk end structure in the most adverse orientation. Determine whether the wedge block can pass freely through the opening. If the wedge block passes freely through the opening, determine whether a 9-inch (230-mm) diameter rigid sphere can pass freely through the opening.

(2) With the manufacturer's recommended maximum thickness mattress and foundation in place, repeat the test in paragraph (c)(1) of this section.

§ 1213.5 Marking and labeling.

(a) There shall be a permanent label or marking on each bed stating the name and address (city, state, and zip code) of the manufacturer, distributor, or retailer; the model number; and the month and year of manufacture.

(b) The following warning label shall be permanently attached to the inside of an upper bunk bed end structure in a location that cannot be covered by the bedding but that may be covered by the placement of a pillow.

BILLING CODE 6355–01–P

⚠ WARNING

To help prevent serious or fatal injuries from entrapment or falls:

- Never allow a child under 6 years on upper bunk
- Use only a mattress that is __ inches long and __ inches wide on upper bunk
- Ensure thickness of mattress and foundation combined does not exceed __ inches and that mattress surface is at least 5 inches below upper edge of guardrails

DO NOT REMOVE THIS LABEL

BILLING CODE 6355–01–C

§ 1213.6 Instructions

Instructions shall accompany each bunk bed set, and shall include the following information.

(a) *Size of mattress and foundation.* The length and width of the intended mattress and foundation shall be clearly stated, either numerically or in conventional terms such as twin size, twin extra-long, etc. In addition, the maximum thickness of the mattress and foundation required for compliance with § 1213.3(a)(5) and (b)(1) of this standard shall be stated.

(b) *Safety warnings.* The instructions shall provide the following safety warnings:

(1) Do not allow children under 6 years of age to use the upper bunk.

(2) Use guardrails on both sides of the upper bunk.

(3) Prohibit horseplay on or under beds.

(4) Prohibit more than one person on upper bunk.

(5) Use ladder for entering or leaving upper bunk.

§ 1213.7 Findings.

The Consumer Product Safety Act requires that the Commission, in order to issue a standard, make the following findings and include them in the rule. 15 U.S.C. 2058(f)(3).

(a) The rule in this part (including its effective date of [effective date of final rule]) is reasonably necessary to eliminate or reduce an unreasonable risk of injury associated with the product. (1) For a recent 8.75-year period, the CPSC received reports of 57 deaths of children under age 15 who died when they were trapped between the upper bunk of a bunk bed and the wall or when they were trapped in openings in the bed's end structure. Over 96% of those who died in entrapment incidents were age 3 or younger. On average, averting these deaths is expected to produce a benefit to society with a present value of about $175 to $350 for each bed that otherwise would not have complied with one or more of the rule's requirements.

(2) This increased safety will be achieved in two ways. First, all bunk beds will be required to have a guardrail on both sides of the bed. If the bed is placed against a wall, the guardrail on that side is expected to prevent a child from being entrapped between the bed and the wall. The guardrail on the wall side of the bed must extend continuously from one end to the other. Second, the end structures of the bed must be constructed so that, if an opening in the end structure is large enough so a child can slip his or her body through it, it must be large enough that the child's head also can pass through.

(3) For the reasons discussed in paragraph (d) of this section, the benefits of the changes to bunk beds caused by this rule will have a reasonable relationship to the changes' costs. The rule addresses a risk of death, and applies primarily to a vulnerable population, children under age 3. The life-saving features required by the rule are cost-effective and can be implemented without adversely affecting the performance and availability of the product. The effective date provides enough time so that production of bunk beds that do not already comply with the standard can easily be changed so that the beds comply. Accordingly, the Commission finds that the rule (including its effective date) is reasonably necessary to eliminate or reduce an unreasonable risk of injury associated with the product.

(b) Promulgation of the rule is in the public interest. For the reasons given in paragraph (a) of this section, the Commission finds that promulgation of the rule is in the public interest.

(c) Where a voluntary standard has been adopted and implemented by the affected industry, that compliance with such voluntary standard is not likely to result in the elimination or adequate reduction of the risk of injury; or it is unlikely that there will be substantial compliance with such voluntary standard.

(1) Adequacy of the voluntary standard. (i) In this instance, there is a voluntary standard addressing the risk of entrapment in bunk beds. However, the rule goes beyond the provisions of the voluntary standard. First, it eliminates the voluntary standard's option to have an opening of up to 15 inches at each end of the wall-side guardrail. Second, it requires more of the lower bunk end structures to have entrapment protection. The voluntary standard protects against entrapment only within the 9-inch space immediately above the upper surface of the lower bunk's mattress. The mandatory standard extends this area of protection upward to the level of the underside of the upper bunk foundation. Both of these provisions, which are in the rule but not in the voluntary standard, address fatalities and, as noted in this section, have benefits that bear a reasonable relationship to their costs. Furthermore, the absence of any identification of the manufacturer on many beds has resulted in extremely low recall effectiveness rates. The standard requires that the name and address of the manufacturer, distributor, or retailer be on the beds.

(ii) Therefore, the Commission finds that compliance with the voluntary standard is not likely to result in the elimination or adequate reduction of the risk of entrapment injury or death.

(2) *Substantial compliance.* (i) Neither the CPSA nor the FHSA define ''substantial compliance.'' In dealing with this issue as it applies to bunk beds, the Commission concludes that substantial compliance does not exist where a mandatory rule would achieve a higher degree of compliance. Two key, although not necessarily exclusive, considerations in making this determination are whether, as complied with, the voluntary standard would achieve virtually the same degree of injury reduction that a mandatory standard would achieve and whether the injury reduction will be achieved in a timely manner.

(ii) The Commission has considered carefully the particular characteristics of the bunk bed industry. This industry is highly diverse and fragmented, with differing levels of sophistication relating to product safety. Firms can easily enter and leave the bunk bed manufacturing business. This fragmentation and diversity contributes to difficulties in achieving more complete compliance with the voluntary standard. Because it is difficult to identify all firms in the industry, it is difficult for voluntary standards organizations and trade associations to conduct outreach and education efforts regarding the voluntary standard. By contrast, in industries with a small number of firms, it is easier to find the firms and educate them about the existence and importance of voluntary standards. Mandatory standards—codified in the accessible Code of Federal Regulations—are easier to locate, and their significance is more obvious.

(iii) These generalizations about the industry are supported by the CPSC's staff's enforcement experience. Some manufacturers contacted by CPSC's Compliance staff did not see an urgency to comply with a ''voluntary'' standard, and they did not recognize the hazards associated with noncompliance. Other manufacturers were not even aware of the standard. As a result, entrapment hazards would continue to exist on beds, in use and for sale, in the absence of a mandatory standard.

(iv) A mandatory standard will also reduce the staff's workload in ensuring that children are not exposed to bunk beds presenting entrapment hazards. In the several years before issuance of this rule, the staff expended significant

resources to obtain the then-current level of conformance to the voluntary standard. The Commission believes that fewer resources will be required to enforce the mandatory standard than were previously used to identify defective bunk beds.

(v) For these reasons, the Commission believes that a mandatory bunk bed entrapment standard is needed. This mandatory standard is expected to bring the following benefits:

(A) A mandatory standard should increase the awareness and sense of urgency of manufacturers in this industry regarding compliance with the entrapment provisions, thereby increasing the degree of conformance to those provisions.

(B) A mandatory standard allows the Commission to seek penalties for violations. Publicizing fines for noncompliance with a mandatory standard would deter other manufacturers from making noncomplying beds.

(C) A mandatory standard allows state and local officials to assist CPSC staff in identifying noncomplying bunk beds and to take action to prevent the sale of these beds.

(D) Under a mandatory standard, retailers and distributors violate the law if they sell noncomplying bunk beds. For that reason, retailers and retail associations will insist that manufacturers and importers provide complying bunk beds.

(E) The bunk bed industry is extremely competitive. Manufacturers who now conform to the voluntary standard have expressed concern about those firms that do not. Nonconforming beds can undercut the cost of conforming beds. A mandatory standard will take away any competitive cost advantage for unsafe beds.

(F) A mandatory standard will help prevent noncomplying beds made by foreign manufacturers from entering the United States. CPSC could use the resources of U.S. Customs to assist in stopping hazardous beds at the docks.

(3) Therefore, there is not substantial compliance with the voluntary standard. (This does not mean that the Commission would conclude that a mandatory standard will always be more effective than a voluntary standard. Each case must be considered on its own facts.)

(d) The benefits expected from the rule bear a reasonable relationship to its costs. (1) Compliance with ASTM's requirements. The cost of providing a second guardrail for bunk beds that do not have one is expected to be from $15–40 per otherwise noncomplying bed. If, as expected, the standard prevents virtually all of the deaths it addresses, the present value of the benefits of this modification are estimated to be from $175–350 per otherwise noncomplying bed. Thus, the benefit of this provision is about 4–23 times its cost.

(2) Providing a continuous guardrail. The voluntary standard allows up to a 15-inch gap in the coverage of the guardrail on the wall side of the upper bunk. Additional entrapment deaths are addressed by requiring that the wall-side guardrail be continuous from one end of the bed to the other. The estimated present value of the benefits of this requirement is $2.40 to $3.50 per otherwise noncomplying bed. The Commission estimates that the materials cost to extend one guardrail an additional 30 inches will be less than the present value of the benefits of making the change. Further, the costs of any design changes can be amortized over the number the bunk beds manufactured after the design change is made. Thus, the costs of any design change will be nominal.

(3) Lower bunk end structures. The Commission is aware of a death, involving entrapment in the end structures of the lower bunk, occurring in a scenario not currently addressed by the voluntary standard. This death would be addressed by extending the voluntary standard's lower bunk end structures entrapment provisions from 9 inches above the lower bunk's sleeping surface to the bottom of the upper bunk. The Commission expects the costs of this requirement to be design-related only, and small. Indeed, for some bunk beds, materials costs may decrease since less material may be required to comply with these requirements than is currently being used. Again, the design costs for this modification to the end structures can be amortized over the subsequent production run of the bed.

(4) Effect on market. The small additional costs from any wall guardrail and end structure modifications are not expected to affect the market for bunk beds, either alone or added to the costs of compliance to ASTM's provisions.

(5) Conclusion. The Commission has no reason to conclude that any of the standard's requirements will have costs that exceed the requirement's expected benefits. Further, the total effect of the rule is that the benefits of the rule will exceed its costs by about 4–23 times. Accordingly, the Commission concludes that the benefits expected from the rule will bear a reasonable relationship to its costs.

(e) The rule imposes the least burdensome requirement that prevents or adequately reduces the risk of injury for which the rule is being promulgated. (1) The Commission considered relying on the voluntary standard, either alone or combined with a third-party certification program. However, the Commission concluded that a mandatory program will be more effective in reducing these deaths. Accordingly, these alternatives would not prevent or adequately reduce the risk of injury for which the rule is being promulgated.

(2) The Commission also considered a suggestion that bunk beds that conformed to the voluntary standard be so labeled. Consumers could then compare conforming and nonconforming beds at the point of purchase and make their purchase decisions with this safety information in mind. This, however, would not necessarily reduce injuries, because consumers likely would not know there is a voluntary standard and thus would not see any risk in purchasing a bed that was not labeled as conforming to the standard.

(3) For the reasons stated in this section, no alternatives to a mandatory rule were suggested that would adequately reduce the deaths caused by entrapment of children in bunk beds. Accordingly, the Commission finds that this rule imposes the least burdensome requirement that prevents or adequately reduces the risk of injury for which the rule is being promulgated.

Figure 1 to Part 1213—Wedge Block for Tests in § 1213.4(a), (b) and (c).

BILLING CODE 6355–01–P

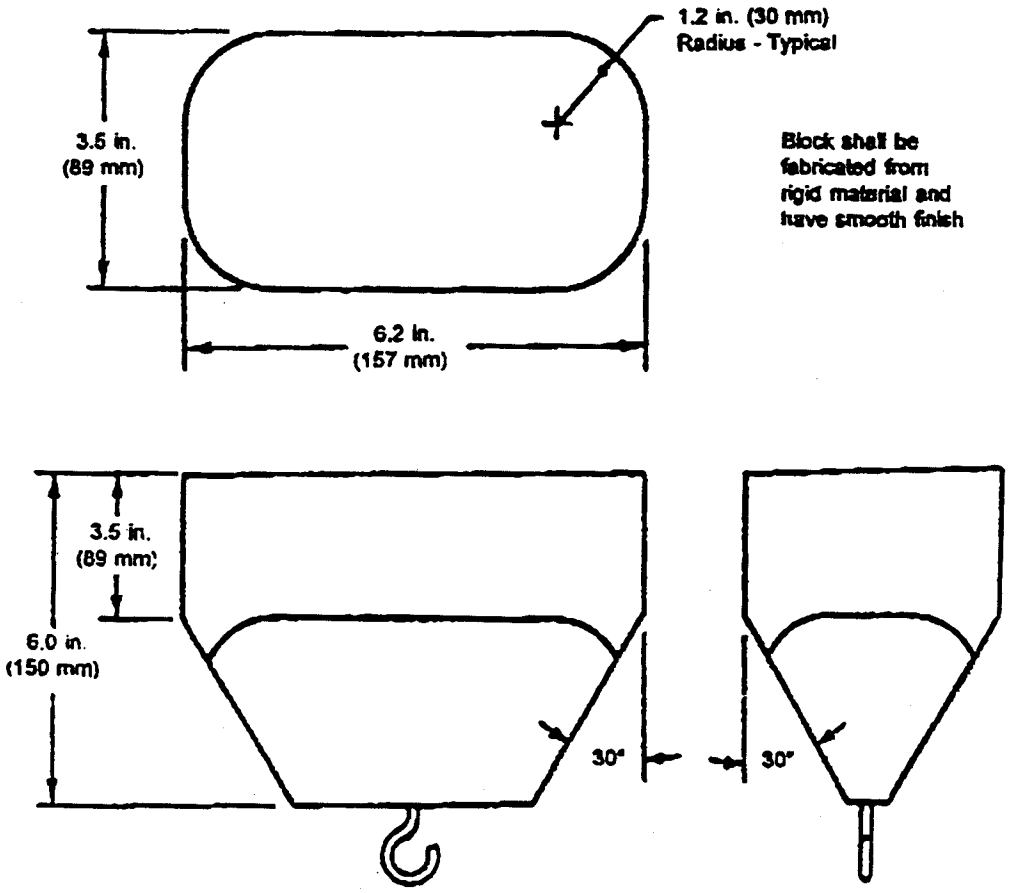

BILLING CODE 6355–01–C

2. The authority citation for part 1500 continues to read as follows:

Authority: 15 U.S.C. 1261–1278.

3. Section 1500.18 is amended by adding paragraph (a)(18) to read as follows:

§ 1500.18 Banned toys and other banned articles intended for use by children.

(a) * * *

(18) (i) Any bunk bed (as defined in § 1513.2(c) of this chapter) that does not comply with the requirements of part 1513 of this chapter.

(ii) Findings—(A) General. In order to issue a rule under Section 3(e) of the Federal Hazardous Substances Act (FHSA), 15 U.S.C. 1262(e), classifying a toy or other article intended for use by children as a hazardous substance on the basis that it presents a mechanical hazard (as defined in Section 2(s) of the FHSA), the FHSA requires the Commission to make certain findings and to include these findings in the regulation. These findings are discussed in paragraphs (a)(18)(B) through (D) of this section.

(B) Where a voluntary standard has been adopted and implemented by the affected industry, that compliance with such voluntary standard is not likely to result in the elimination or adequate reduction of the risk of injury, or it is unlikely that there will be substantial compliance with such voluntary standard.

(*1*) *Adequacy of the voluntary standard.* (*i*) In this instance, there is a voluntary standard addressing the risk of entrapment in bunk beds. However, the rule goes beyond the provisions of the voluntary standard. First, it eliminates the voluntary standard's option to have an opening of up to 15 inches at each end of the wall-side guardrail. Second, it requires more of the lower bunk end structures to have entrapment protection. The voluntary standard protects against entrapment only within the 9-inch space immediately above the upper surface of the lower bunk's mattress. The mandatory standard extends this area of protection upward to the level of the underside of the upper bunk foundation. Both of these provisions, which are in the rule but not in the voluntary standard, address fatalities and, as noted in this paragraph (a)(18), have benefits that bear a reasonable relationship to their costs. Furthermore, the absence of any identification of the manufacturer on many beds has resulted in extremely low recall effectiveness rates. The standard requires that the name and address of the manufacturer, distributor, or retailer be on the beds.

(*ii*) Therefore, the Commission finds that compliance with the voluntary standard is not likely to result in the elimination or adequate reduction of the risk of entrapment injury or death.

(*2*) *Substantial compliance.* (*i*) Neither the CPSA nor the FHSA define ''substantial compliance.'' In dealing with this issue as it applies to bunk beds, the Commission concludes that substantial compliance does not exist where a mandatory rule would achieve a higher degree of compliance. Two key, although not necessarily exclusive, considerations in making this determination are whether, as complied with, the voluntary standard would achieve virtually the same degree of injury reduction that a mandatory standard would achieve and whether the injury reduction will be achieved in a timely manner.

(*ii*) The Commission has considered carefully the particular characteristics of the bunk bed industry. This industry is highly diverse and fragmented, with differing levels of sophistication relating to product safety. Firms can easily enter and leave the bunk bed manufacturing business. This fragmentation and

diversity contributes to difficulties in achieving more complete compliance with the voluntary standard. Because it is difficult to identify all firms in the industry, it is difficult for voluntary standards organizations and trade associations to conduct outreach and education efforts regarding the voluntary standard. By contrast, in industries with a small number of firms, it is easier to find the firms and educate them about the existence and importance of voluntary standards. Mandatory standards—codified in the accessible Code of Federal Regulations—are easier to locate, and their significance is more obvious.

(*iii*) These generalizations about the industry are supported by the CPSC staff's enforcement experience. Some manufacturers contacted by CPSC's Compliance staff did not see an urgency to comply with a ''voluntary'' standard, and they did not recognize the hazards associated with noncompliance. Other manufacturers were not even aware of the standard. As a result, entrapment hazards would continue to exist on beds, in use and for sale, in the absence of a mandatory standard.

(*iv*) A mandatory standard will also reduce the staff's workload in ensuring that children are not exposed to bunk beds presenting entrapment hazards. In the past several years, the staff has expended significant resources to obtain the current level of conformance to the voluntary standard. The Commission expects that fewer resources will be required to enforce the mandatory standard than are currently being used to identify defective bunk beds.

(*v*) For these reasons, the Commission believes that a mandatory bunk bed entrapment standard is needed. This mandatory standard will bring the following benefits: A mandatory standard should increase the awareness and sense of urgency of manufacturers in this industry regarding compliance with the entrapment provisions, thereby increasing the degree of conformance to those provisions. A mandatory standard allows the Commission to seek penalties for violations. Publicizing fines for noncompliance with a mandatory standard would deter other manufacturers from making noncomplying beds. A mandatory standard allows state and local officials to assist CPSC staff in identifying noncomplying bunk beds and to take action to prevent the sale of these beds. Under a mandatory standard, retailers and distributors violate the law if they sell noncomplying bunk beds. For that reason, retailers and retail associations will insist that manufacturers and importers provide complying bunk beds. The bunk bed industry is extremely competitive. Manufacturers who conform to the voluntary standard have expressed concern about those firms that do not. Nonconforming beds can undercut the cost of conforming beds. A mandatory standard will take away any competitive cost advantage for unsafe beds. A mandatory standard will help prevent noncomplying beds made by foreign manufacturers from entering the United States. CPSC could use the resources of U.S. Customs to assist in stopping hazardous beds at the docks.

(*vi*) Therefore, there is not substantial compliance with the voluntary standard. (This does not mean that the Commission would conclude that a mandatory standard will always be more effective than a voluntary standard. Each case must be considered on its own facts.)

(C) The benefits expected from the rule bear a reasonable relationship to its costs. (*1*) Compliance with ASTM's requirements. The cost of providing a second guardrail for bunk beds that do not have one is expected to be from $15–40 per otherwise noncomplying bed. If, as expected, the standard prevents virtually all of the deaths it addresses, the present value of the benefits of this modification are estimated to be from $175–350 per otherwise noncomplying bed. Thus, the benefit of this provision is about 4–23 times its cost.

(*2*) Providing a continuous guardrail. The voluntary standard allows up to a 15-inch gap in the coverage of the guardrail on the wall side of the upper bunk. Additional entrapment deaths are addressed by requiring that the wall-side guardrail be continuous from one end of the bed to the other. The estimated present value of the benefits of this requirement will be $2.40 to $3.50 per otherwise noncomplying bed. The Commission estimates that the materials cost to extend one guardrail an additional 30 inches will be less than the present value of the benefits of making the change. Further, the costs of any design changes can be amortized over the number of bunk beds produced after the design change is made. Thus, any design costs are nominal.

(*3*) Lower bunk end structures. The Commission is aware of a death, involving entrapment in the end structures of the lower bunk, occurring in a scenario not currently addressed by the voluntary standard. This death is addressed by extending the upper limit of the voluntary standard's lower bunk end structures entrapment provisions from 9 inches above the lower bunk's sleeping surface to the bottom of the upper bunk. The Commission expects the costs of this requirement to be design-related only, and small. Indeed, for some bunk beds, material costs may decrease since less material may be required to comply with these requirements than are currently being used. Again, the design costs for this modification to the end structures can be amortized over the subsequent production run of the bed.

(*4*) Effect on market. The small additional costs from any wall guardrail and end structure modifications are not expected to affect the market for bunk beds, either alone or added to the costs of compliance to ASTM's provisions.

(*5*) Conclusion. The Commission has no reason to conclude that any of the standard's requirements have costs that exceed the requirement's expected benefits. Further, the total effect of the rule is that the benefits of the rule will exceed its costs by about 4–23 times. Accordingly, the Commission concludes that the benefits expected from the rule bear a reasonable relationship to its costs.

(D) The rule imposes the least burdensome requirement that prevents or adequately reduces the risk of injury for which the rule is being promulgated. (*1*) The Commission considered relying on the voluntary standard, either alone or combined with a third-party certification program. However, the Commission concludes that a mandatory program will be more effective in reducing these deaths. Accordingly, these alternatives could not prevent or adequately reduce the risk of injury for which the rule is being promulgated.

(*2*) The Commission also considered a suggestion that bunk beds that conformed to the voluntary standard be so labeled. Consumers could then compare conforming and nonconforming beds at the point of purchase and make their purchase decisions with this safety information in mind. This, however, would not necessarily reduce injuries, because consumers likely would not know there is a voluntary standard and thus would not see any risk in purchasing a bed that was not labeled as conforming to the standard.

4. A new part 1513 is added to Subchapter C to read as follows:

PART 1513—REQUIREMENTS FOR BUNK BEDS

Sec.
1513.1 Scope, application, and effective date.
1513.2 Definitions.
1513.3 Requirements.
1513.4 Test methods.
1513.5 Marking and labeling.

1513.6 Instructions.

Figure 1 to Part 1513—Wedge Block for Tests

Authority: 15 U.S.C. 1261(f)(1)(D), 1261(s), 1262(e)(1), 1262(f)–(i).

§ 1513.1 Scope, application, and effective date.

This part 1513 prescribes requirements for bunk beds to reduce or eliminate the risk that children will die or be injured from being trapped between the upper bunk and the wall or in openings below guardrails or in other structures in the bed. Bunk beds meeting these requirements are exempted from 16 CFR 1500.18(a)(18). This part applies to all bunk beds intended for use by children that are sold for residential use and manufactured in the United States, or imported, after [the effective date of the final rule]. Bunk beds as described in this section that are not intended for use by children are subject to the requirements in 16 CFR part 1213, and not to 16 CFR 1500.18(a)(18). However, the provisions of 16 CFR 1213 are substantively identical to the requirements in this part 1513.

§ 1513.2 Definitions.

As used in this part 1513:

(a) *Bed.* See *Bunk bed.*

(b) *Bed end structure* means an upright unit at the head and foot of the bed to which the side rails attach.

(c) *Bunk bed* means a bed in which the underside of any foundation is over 30 inches (760 mm) from the floor.

(d) *Foundation* means the base or support on which a mattress rests.

(e) *Guardrail* means a rail or guard on a side of the upper bunk to prevent a sleeping occupant from falling or rolling out.

§ 1513.3 Requirements.

(a) *Guardrails.* (1) Any bunk bed shall provide at least two guardrails, at least one on each side of the bed.

(2) One guardrail shall be continuous between each of the bed's end structures. The other guardrail may terminate before reaching the bed's end structures, providing there is no more than 15 inches (380 mm) between either end of the guardrail and the nearest bed end structure.

(3) For bunk beds designed to have a ladder attached to one side of the bed, the continuous guardrail shall be on the other side of the bed.

(4) Guardrails shall be attached so that they cannot be removed without either intentionally releasing a fastening device or applying forces sequentially in different directions.

(5) The upper edge of the guardrails shall be no less than 5 inches (130 mm) above the top surface of the mattress when a mattress of the maximum thickness specified by the manufacturer's instructions is on the bed.

(6) With no mattress on the bed, there shall be no openings in the structure between the lower edge of the uppermost member of the guardrail and the underside of the upper bunk's foundation that would permit passage of the wedge block shown in Fig. 1 when tested in accordance with the procedure at § 1513.4(a).

(b) *Bed end structures.* (1) The upper edge of the upper bunk end structures shall be at least 5 inches (130 mm) above the top surface of the mattress for at least 50 percent of the distance between the two posts at the head and foot of the upper bunk when a mattress and foundation of the maximum thickness specified by the manufacturer's instructions is on the bed.

(2) With no mattress on the bed, there shall be no openings in the rigid end structures above the foundation of the upper bunk that will permit the free passage of the wedge block shown in Fig. 1 when tested in accordance with the procedure at § 1513.4(b).

(3) When tested in accordance with § 1513.4(c), there shall be no openings in the end structures between the underside of the foundation of the upper bunk and upper side of the foundation of the lower bunk that will permit the free passage of the wedge block shown in Fig. 1, unless the openings are also large enough to permit the free passage of a 9-inch (230-mm) diameter rigid sphere.

§ 1513.4 Test methods.

(a) *Guardrails* (see § 1513.3(a)(6)). With no mattress on the bed, place the wedge block shown in Fig. 1, tapered side first, into each opening in the rigid bed structure below the lower edge of the uppermost member of the guardrail and above the underside of the upper bunk's foundation. Orient the block so that it is most likely to pass through the opening (e.g., the major axis of the block parallel to the major axis of the opening) (''most adverse orientation''). Then, gradually apply a 33-lbf (147-N) force in a direction perpendicular to the plane of the large end of the block. Sustain the force for 1 minute.

(b) *Upper bunk end structure* (see § 1513.3(b)(2)). Without a mattress or foundation on the upper bunk, place the wedge block shown in Fig. 1 into any opening, tapered side first, and in the most adverse orientation. Determine if the wedge block can pass freely through the opening.

(c) *Lower bunk end structure* (see § 1513.3(b)(3)). (1) Without a mattress or foundation on the lower bunk, place the wedge block shown in Fig. 1, tapered side first, into each opening in the lower bunk end structure in the most adverse orientation. Determine whether the wedge block can pass freely through the opening. If the wedge block passes freely through the opening, determine whether a 9-inch (230-mm) diameter rigid sphere can pass freely through the opening.

(2) With the manufacturer's recommended maximum thickness mattress and foundation in place, repeat the test in paragraph (c)(1) of this section.

§ 1513.5 Marking and labeling.

(a) There shall be a permanent label or marking on each bed stating the name and address (city, state, and zip code) of the manufacturer, distributor, or retailer; the model number; and the month and year of manufacture.

(b) The following warning label shall be permanently attached to the inside of an upper bunk bed end structure in a location that cannot be covered by the bedding but that may be covered by the placement of a pillow.

BILLING CODE 6355–01–P

⚠ WARNING

To help prevent serious or fatal injuries from entrapment or falls:

- Never allow a child under 6 years on upper bunk
- Use only a mattress that is __ inches long and __ inches wide on upper bunk
- Ensure thickness of mattress and foundation combined does not exceed __ inches and that mattress surface is at least 5 inches below upper edge of guardrails

DO NOT REMOVE THIS LABEL

BILLING CODE 6355–01–C

§ 1513.6 Instructions

Instructions shall accompany each bunk bed set, and shall include the following information.

(a) *Size of mattress and foundation.* The length and width of the intended mattress and foundation shall be clearly stated, either numerically or in conventional terms such as twin size, twin extra-long, etc. In addition, the maximum thickness of the mattress and foundation required for compliance with § 1513.3(a)(5) and (b)(1) shall be stated.

(b) *Safety warnings.* The instructions shall provide the following safety warnings:

(1) Do not allow children under 6 years of age to use the upper bunk.

(2) Use guardrails on both sides of the upper bunk.

(3) Prohibit horseplay on or under beds.

(4) Prohibit more than one person on upper bunk.

(5) Use ladder for entering or leaving upper bunk.

Figure 1 to Part 1513—Wedge Block for Tests in § 1531.4(a), (b) and (c).

BILLING CODE 6355–01–P

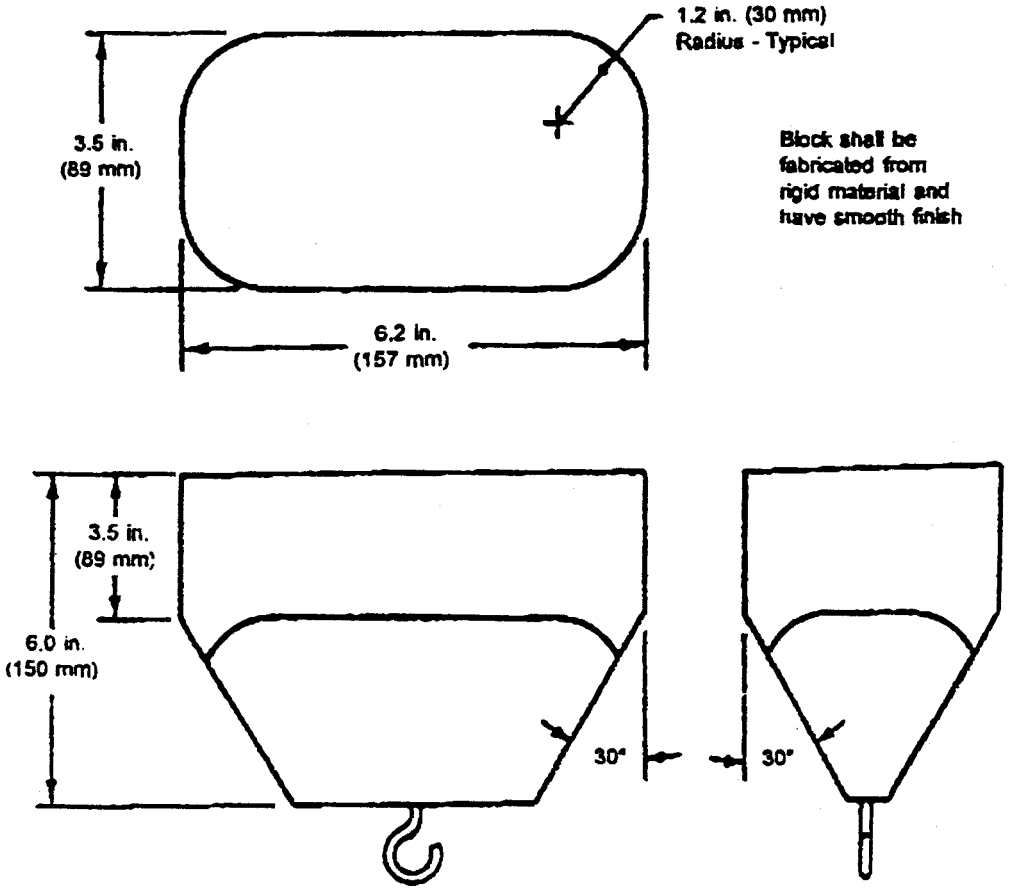

BILLNG CODE 6355–01–C

Dated: February 5, 1999.

Sadye E. Dunn,

Secretary, Consumer Product Safety Commission.

[FR Doc. 99–3304 Filed 3–2–99; 8:45 am]

BILLING CODE 6355–01–P

DEPARTMENT OF THE TREASURY

Internal Revenue Service

26 CFR Part 1

[REG–104072–97]

RIN 1545–AV07

Recharacterizing Financing Arrangements Involving Fast-Pay Stock; Correction

AGENCY: Internal Revenue Service (IRS), Treasury.

ACTION: Correction to notice of proposed rulemaking.

SUMMARY: This document contains a correction to REG–104072–97, which was published in the **Federal Register** on Wednesday, January 6, 1999 (64 FR 805), relating to financing arrangements involving fast-pay stock.

FOR FURTHER INFORMATION CONTACT: Jonathan Zelnik, (202) 622–3940 (not a toll-free number).

SUPPLEMENTARY INFORMATION:

Background

The notice of proposed rulemaking that is the subject of this correction is under section 7701 of the Internal Revenue Code.

Need for Correction

As published, REG–104072–97 contains errors which may prove to be misleading and are in need of clarification.

Correction of Publication

Accordingly, the publication of the notice of proposed rulemaking (REG–104072–97), which is the subject of FR Doc. 99–178, is corrected as follows:

§ 1.1441–7 [Corrected]

1. On page 810, column 1, § 1.1441–7(g)(4) *Example 2,* line 4, the language ''that A entered the arrangement with a'' is corrected to read ''that A entered into the arrangement with a''.

§ 1.7701(l)–3 [Corrected]

2. On page 810, column 3, § 1.7701(l)–3(c)(3)(iv)(A), line 3, the language ''attributable to financing instruments)'' is corrected to read ''attributable to the financing instruments)''.

3. On page 811, column 3, § 1.7701(l)–3(e) *Example 5,* (i), line 3 from the bottom of the paragraph, the language ''Y's 1996 deduction attributable to financing'' is corrected to read ''Y's 1996 deduction attributable to the financing''.

Cynthia E. Grigsby,

Chief, Regulations Unit, Assistant Chief Counsel (Corporate).

[FR Doc. 99–5128 Filed 3–2–99; 8:45 am]

BILLING CODE 4830–01–U

DEPARTMENT OF JUSTICE

28 CFR Part 25

[AG Order No. 2209–99]

RIN 1105–AA51

National Instant Criminal Background Check System Regulation

AGENCY: Federal Bureau of Investigation, Department of Justice.

ACTION: Proposed rule.

SUMMARY: The United States Department of Justice (''DOJ'') proposes to amend the DOJ regulation implementing the

National Instant Criminal Background Check System (''NICS'') pursuant to the Brady Handgun Violence Prevention Act (''Brady Act''), to establish a retention period of 90 days for information relating to allowed firearm transfers in the system transaction log of background check transactions (''NICS Audit Log''). Audits of the use of the NICS are considered essential to safeguard the privacy of the sensitive information checked by the system and to ensure that the system is operating in the manner required by the Brady Act. Audits will help prevent invasions of privacy that result from misuse of the system. For example, audits will enable the detection of felons who assume the identity of a qualified person to buy guns illegally and persons who misuse the system to perform background checks unrelated to gun purchases (such as employment checks). In addition, the proposed rule clarifies that the retention period begins to run on the day after the request for a NICS check is received. The proposed rule also clarifies that only the FBI has *direct* access to the NICS Audit Log and that, in furtherance of the purpose of auditing the use and performance of the NICS, the FBI may extract and provide information from the NICS Audit Log to the Bureau of Alcohol, Tobacco and Firearms (''ATF'') for use in ATF's inspections of Federal Firearms Licensee (''FFL'') records, provided that ATF destroys NICS Audit Log information about allowed firearm transfers within the applicable retention period and maintains a written record certifying the destruction. By using the preexisting ATF inspection system to audit use of the NICS by FFLs, it will be unnecessary to propose a system under which the FBI would perform recurring audits of FFLs. Such a system could lead to duplication of effort and expense resulting from FBI auditors traveling to FFL premises to review the same records that ATF reviews during its routine inspections of FFLs.

DATES: Written comments must be received on or before June 1, 1999.

ADDRESSES: All comments concerning this proposed rule should be sent to: Mr. Emmet A. Rathbun, Unit Chief, Federal Bureau of Investigation, Module C–3, 1000 Custer Hollow Road, Clarksburg, West Virginia 26306–0147.

FOR FURTHER INFORMATION CONTACT: Mr. Emmet A. Rathbun, Unit Chief, Federal Bureau of Investigation, telephone number (304) 625–2000.

SUPPLEMENTARY INFORMATION: This proposal would amend the National Instant Criminal Background Check System Regulation (28 CFR, Part 25, Subpart A), published in the **Federal Register** on October 30, 1998 (63 FR 58303). The proposed amendments are to the portions of the NICS regulation providing for the retention and use of information in the NICS Audit Log pertaining to allowed firearm transfers, 28 CFR 25.9(b)(1) and (2) (63 FR 58311).

Record Retention Period

The Brady Act requires the Attorney General to ensure the privacy and security of information in the NICS and the proper operation of the system. The purpose of maintaining the NICS Audit Log is to help carry out this function by facilitating audits of the use and operation of the NICS. At the same time, to prevent the establishment of a national firearms registry, the Brady Act requires the destruction of NICS records (other than the NICS Transaction Number (''NTN'') and the date the NTN was assigned) relating to allowed firearm transfers. Although an eighteen-month retention period for information about allowed firearm transfers was initially proposed in the notice of proposed rulemaking for the NICS regulation, the final NICS rule took into account the comments on this subject and balanced the competing interests by reducing the retention period to no more than six months.

The preamble to the final NICS regulation described the question of the period of record retention as follows: ''In light of the statutory requirement that records for allowed transfers be destroyed, and the countervailing statutory requirement to provide for system privacy and security, the Department determined that the general retention period for records of allowed transfers in the NICS Audit Log should be the minimum reasonable period for performing audits on the system, but in no event more than six months. Section 25.9(b) in the final rule was revised to reflect this and to provide that such information may be retained for a longer period if necessary to pursue identified cases of misuse of the system. The Department further determined that the FBI shall work toward reducing the retention period to the shortest practicable period of time less than six months that will allow basic security audits of the NICS. By February 28, 1999, the Department will issue a notice of a proposed revision of the regulation setting forth a further reduced period of retention that will be observed by the system.'' (63 FR 58304.) The purpose of this notice is to propose a period of retention less than six months that will be observed by the system.

Audits of the NICS will include (1) quality control audits of NICS examiners and call center operators to ensure the accuracy of the responses given to FFLs; (2) audits of the system's data processing to aid in the resolution of technical system problems; (3) audits of the use of the NICS by state agencies serving as points of contact (''POCs'') for the NICS and/or using the NICS in connection with issuing firearms licenses or permits, to ensure that such agencies are accessing the NICS only for authorized purposes; and (4) audits of the use of the NICS by FFLs to ensure that FFLs are accessing the NICS only for authorized purposes and are not sending the NICS false data to evade the system.

Auditing the users (FFLs and POCs) of the NICS is essential to safeguard the security and privacy of personal information in the system. The NICS will perform background checks that access a tremendous amount of criminal history, mental health, military background, and other information about individuals. Access to such sensitive information for background checks on individuals should only be available for purposes authorized by law. Misuse of that information could lead to significant invasions of privacy. The Brady Act recognized the sensitivity of system information by requiring the Attorney General to issue regulations ''to ensure the security and privacy of the information of the system.'' The Brady Act also provides that disclosures of information from the NICS are subject to the restrictions of the Privacy Act. Without the capacity to audit the use of the system, there will be no way of determining whether FFLs are requesting checks for purposes other than checking on the background of a prospective gun purchaser. Many businesses and individuals would be very interested in having easy access to these government databases through FFLs to do employment or other unauthorized checks on persons. While it is true that a NICS check will not disclose what record was the reason for a denial, the mere fact that the system response is ''denied'' (indicating that at least one disqualifying record exists) may be enough to cause employers or others to take adverse action against the person checked. A ''delayed'' response might also have a detrimental impact on the subject of the check if a person misusing the system does not wait to see if a ''proceed'' follows or concludes, unfairly, that the response means the individual checked has some kind of stigmatizing ''record.'' The FBI must take appropriate steps to identify and guard against such invasions of privacy.

In addition, the Brady Act requires the Attorney General to establish a system that will inform FFLs whether

available information demonstrates that a person seeking to acquire a firearm is disqualified by law from possessing firearms. The background check system established to perform this function is based upon names and other personally identifying information that can be falsified. Therefore, it is equally important to be able to audit NICS transactions to ensure that FFLs are not misusing the NICS by deliberately submitting false information to the system. The ability to audit the background checks requested by FFLs, by comparing the information submitted to the NICS with information retained by the FFL, will deter attempts to evade the system. In other words, audits will help ensure that the system is operating in the manner required by the Brady Act.

There is no formula for determining with precision what retention period is the minimum necessary to allow adequate audits of the NICS, and because the NICS is a new system, there is no historical data regarding the use of the NICS from which any definite conclusion about retention periods can be drawn. What can be said with certainty is that, at six months, the NICS retention period is already less than half of the retention period established for auditing the users of the Interstate Identification Index (''III''), the information system managed by the FBI that makes up the vast majority of the records checked by the NICS. It is also undeniable that, the shorter the period, the less likely it is that even random audits will uncover or deter system misuse.

In determining the period of retention that will allow for a minimal opportunity to detect misuse of the system by FFLs and POCs, the Department recognizes the need for both: (1) a sufficient period of system activity to be audited; and (2) time to administer the audits. A time period for administering the audits is necessary to: identify those system records that will be used in the audit; conduct the audit; and review the results of the audit to determine whether there are any identified cases of misuse of the system. Accordingly, the Department has concluded that the shortest practicable period of time for retaining records of allowed transfers that would permit the performance of basic security audits of the NICS is 90 days.

Under the proposed rule, therefore, section 25.9(b)(1) provides that in cases of allowed transfers, all information in the NICS Audit Log relating to the person or the transfer, other than the NTN assigned to the transfer and the date the number was assigned, will be destroyed not more than 90 days after the date the request for the NICS check was received. The proposed rule also changes section 25.9(b)(1) to provide that the retention period begins to run on the day after ''the date the request for the NICS check was received,'' instead of the date the ''transfer was allowed.'' This change provides a uniform date from which to begin the retention period.

Accomplishing the Audits

Quality control, data processing, and POC audits can all be accomplished by FBI employees or contractors without the need for outside assistance. In order to audit the use of the NICS by FFLs, however, the FBI is developing a plan, in coordination with ATF, under which information from the NICS Audit Log will be provided to ATF for use in conjunction with its compliance inspections of FFL records. FFLs are subject to inspections by ATF pursuant to the provisions of the Gun Control Act (''GCA''), 18 U.S.C. 923(g)(1)(B)(ii). By using the preexisting ATF inspection system to audit use of the NICS by FFLs, it will be unnecessary to propose a system under which the FBI would perform recurring audits of FFLs. Such a system could lead to duplication of effort and expense resulting from FBI auditors traveling to FFL premises to review the same records that ATF reviews during its routine inspections of FFLs. It is least intrusive and most efficient to have regular review of FFL NICS records performed by ATF as part of its inspection program.

The information comparisons by ATF of NICS Audit Log data with FFL records of NICS checks will detect and deter misuse of the NICS by FFLs and ensure FFL compliance with the Brady Act and the GCA. Under this plan, ATF will not have direct access to the information in the NICS Audit Log. The information will be extracted from the NICS Audit Log by the FBI and provided to ATF for the FFLs to be inspected. Irregularities relating to the use of the NICS by an FFL discovered during an ATF inspection will be referred to the FBI. Under this plan, ATF will destroy the NICS Audit Log information about allowed firearm transfers within the applicable retention period and maintain a written record certifying destruction of the records. The information provided to ATF from the NICS Audit Log will be the same information that ATF is already authorized to review when inspecting FFL records under the GCA.

The proposed rule, therefore, amends paragraph 25.9(b)(2) to clarify that while only the FBI has *direct* access to the NICS Audit Log, the FBI, in furtherance of the purpose of conducting audits of the use and performance of the NICS, may extract and provide information from the NICS Audit Log to ATF for use in ATF's inspections of FFL records, provided that ATF destroys information about allowed firearm transfers within the retention period for such information set forth in paragraph 25.9(b)(1) and maintains a written record certifying the destruction.

Applicable Administrative Procedures and Executive Orders

Regulatory Flexibility Analysis

The Attorney General, in accordance with the Regulatory Flexibility Act (5 U.S.C. 605(b)), has reviewed this final regulation and by approving it certifies that this regulation will not have a significant economic impact on a substantial number of small entities. While many FFLs are small businesses, they are not subject to any additional burdens by the proposed plan to audit their use of the NICS.

Executive Order 12866

The proposed rule has been drafted and reviewed in accordance with Executive Order 12866, section 1(b), Principles of Regulation. The Department of Justice has determined that this proposed rule is a ''significant regulatory action'' under section 3(f) of Executive Order 12866, Regulatory Planning and Review, and thus it has been reviewed by the Office of Management and Budget (''OMB'').

Executive Order 12612

This proposed rule will not have a substantial direct effect on the states, on the relationship between the national government and the states, or on the distribution of power and responsibilities among the various levels of government. Therefore, in accordance with Executive Order 12612, it is determined that this proposed rule does not have sufficient federalism implications to warrant the preparation of a Federal Assessment.

Unfunded Mandates Reform Act of 1995

This proposed rule will not result in the expenditure by state, local, and tribal governments, in the aggregate, or by the private sector, of $100,000,000 or more in any one year, and it will not significantly or uniquely affect small governments. Therefore, no actions were deemed necessary under the provisions of the Unfunded Mandates Reform Act of 1995.

Small Business Regulatory Enforcement Fairness Act of 1996

This final rule is not a major rule as defined by the Small Business Regulatory Enforcement Fairness Act of 1996. 5 U.S.C. 804. This rule will not result in an annual effect on the economy of $100,000,000 or more, a major increase in costs or prices, or have significant adverse effects on competition, employment, investment, productivity, innovation, or on the ability of United States-based companies to compete with foreign-based companies in domestic and export markets.

List of Subjects in 28 CFR Part 25

Administrative practice and procedure, Business and industry, Computer technology, Courts, Firearms, Law enforcement officers, Penalties, Privacy, Reporting and recordkeeping requirements, Security measures, Telecommunications.

Accordingly, § 25.9 of part 25 of title 28 of the Code of Federal Regulations is proposed to be amended as follows:

PART 25—DEPARTMENT OF JUSTICE INFORMATION SYSTEMS

Subpart A—The National Instant Criminal Background Check System

1. The authority section for Subpart A continues to read as follows:

Authority: Pub. L. 103–159, 107 Stat. 1536.

§ 25.9 [Amended]

2. In § 25.9, paragraph (b) is revised to read as follows:

* * * * *

(b) The FBI will maintain an automated NICS Audit Log of all incoming and outgoing transactions that pass through the system.

(1) The NICS Audit Log will record the following information: type of transaction (inquiry or response), line number, time, date of inquiry, header, message key, ORI, and inquiry/response data (including the name and other identifying information about the prospective transferee and the NTN). In cases of allowed transfers, all information in the NICS Audit Log related to the person or the transfer, other than the NTN assigned to the transfer and the date the number was assigned, will be destroyed not more than 90 days after the date the request for the NICS check is received. NICS Audit Log records relating to denials will be retained for 10 years, after which time they will be transferred to a Federal Records Center for storage. The NICS will not be used to establish any system for the registration of firearms, firearm owners, or firearm transactions or dispositions, except with respect to persons prohibited from receiving a firearm by 18 U.S.C. 922 (g) or (n) or by state law.

(2) The NICS Audit Log will be used to analyze system performance, assist users in resolving operational problems, support the appeals process, or support audits of the use of the system. Searches may be conducted on the NICS Audit Log by time frame, i.e., by day or month, by FFL, or by a particular state or agency. Information in the NICS Audit Log pertaining to allowed transfers may only be directly accessed by the FBI for the purpose of conducting audits of the use and performance of the NICS. Permissible uses include extracting and providing information from the NICS Audit Log to ATF in connection with ATF's inspections of FFL records, provided that ATF destroys the information about allowed transfers within the retention period for such information set forth in § 25.9(b)(1) and maintains a written record certifying the destruction. Such information, however, may be retained and used as long as needed to pursue cases of identified misuse of the system. The NICS, including the NICS Audit Log, may not be used by any Department, agency, officer, or employee of the United States to establish any system for the registration of firearms, firearm owners, or firearm transactions or dispositions. The NICS Audit Log will be monitored and reviewed on a regular basis to detect any possible misuse of the NICS data.

* * * * *

Dated: February 27, 1999.

Janet Reno,

Attorney General.

[FR Doc. 99–5343 Filed 3–1–99; 2:36 pm]

BILLING CODE 4410–06–P

ENVIRONMENTAL PROTECTION AGENCY

40 CFR Part 52

[FRL–6306–7]

Public Hearing for Findings of Significant Contribution and Rulemaking on Section 126 Petitions for Purposes of Reducing Interstate Ozone Transport, Technical Correction, and Notice of Availability of Additional Technical Documents

AGENCY: Environmental Protection Agency (EPA).

ACTION: Supplemental notice of proposed rulemaking; announcement of public hearing.

SUMMARY: The EPA is announcing that it will hold a public hearing on March 12, 1999, if a hearing is requested, on a supplemental notice of proposed rulemaking (SNPR) on petitions submitted under section 126 of the Clean Air Act. The EPA will not hold a public hearing if one is not requested by March 9, 1999. The SNPR was signed on the same day as this notice, made immediately available to the public on EPA's website at http://www.epa.gov/airlinks, and will be published shortly in the **Federal Register**.

In the SNPR, EPA is proposing action on recent requests from Maine and New Hampshire which ask EPA to now make findings of significant contribution under the 8-hour ozone standard regarding sources named in their August 1997 section 126 petitions. The EPA has previously proposed action on the petitions from these States with respect to the 1-hour ozone standard as part of a proposal on eight petitions that were submitted individually by eight Northeastern States (63 FR 52213, September 30, 1998; and 63 FR 56292, October 21, 1998). The SNPR supplements that proposal.

DATES: A public hearing on the section 126 SNPR will be held on March 12, 1999 in Washington, DC, if requested by March 9. The comment period on the SNPR ends on April 11, 1999. Comments must be postmarked by the last day of the comment period and sent directly to the Docket Office listed in **ADDRESSES** (in duplicate form if possible). Please refer to **SUPPLEMENTARY INFORMATION** for additional information on the comment period and public hearing.

ADDRESSES: The public hearing, if there is one, will be held at the EPA Auditorium at 401 M Street SW, Washington, DC, 20460.

Comments may be submitted to the Air and Radiation Docket and Information Center (6102), Attention: Docket No. A–97–43, U.S. Environmental Protection Agency, 401 M Street SW, room M–1500, Washington, DC 20460, telephone (202) 260–7548. Comments and data may also be submitted electronically by following the instructions under **SUPPLEMENTARY INFORMATION** of this document. No confidential business information (CBI) should be submitted through e-mail.

Documents relevant to this action are available for inspection at the Docket Office, at the above address, between 8:00 a.m. and 5:30 p.m., Monday though Friday, excluding legal holidays. A reasonable copying fee may be charged for copying.

FOR FURTHER INFORMATION CONTACT: Questions concerning the public hearing should be directed to JoAnn Allman at the address given below under **SUPPLEMENTARY INFORMATION.** Questions concerning the SNPR should be addressed to Carla Oldham, Office of Air Quality Planning and Standards, Air Quality Strategies and Standards Division, MD–15, Research Triangle Park, NC, 27711, telephone (919) 541–3347, email at oldham.carla@epa.gov.

SUPPLEMENTARY INFORMATION:

Public Hearing

The EPA will conduct a public hearing on the section 126 SNPR on March 12, 1999 beginning at 10:00 a.m., if requested by March 9, 1999. The EPA will not hold a hearing if one is not requested. Please check EPA's webpage at http://www.epa.gov/airlinks on March 10, 1999 for the announcement of whether the hearing will be held. If there is a hearing, it will be held at the EPA Auditorium at 401 M Street SW, Washington, DC, 20460. The metro stop is Waterfront, which is on the green line. Persons planning to present oral testimony at the hearings should notify JoAnn Allman, Office of Air Quality Planning and Standards, Air Quality Strategies and Standards Division, MD–15, Research Triangle Park, NC 27711, telephone (919) 541–1815, email allman.joann@epa.gov no later than March 9, 1999. Oral testimony will be limited to 5 minutes each. Any member of the public may file a written statement before, during, or by the close of the comment period. Written statements (duplicate copies preferred) should be submitted to Docket No. A–97–43 at the above address. The hearing schedule, including lists of speakers, will also be posted on EPA's webpage at http://www.epa.gov/airlinks prior to the hearing. A verbatim transcript of the hearing, if held, and written statements will be made available for copying during normal working hours at the Air and Radiation Docket and Information Center at the above address.

Availability of Related Information

The official record for this rulemaking, as well as the public version, has been established under docket number A–97–43 (including comments and data submitted electronically as described below). A public version of this record, including printed, paper versions of electronic comments, which does not include any information claimed as CBI, is available for inspection from 8:00 a.m. to 5:30 p.m., Monday through Friday, excluding legal holidays. The official rulemaking record is located at the address in **ADDRESSES** at the beginning of this document. Electronic comments can be sent directly to EPA at: A-and-R-Docket@epamail.epa.gov. Electronic comments must be submitted as an ASCII file avoiding the use of special characters and any form of encryption. Comments and data will also be accepted on disks in WordPerfect in 5.1/6.1 file format or ASCII file format. All comments and data in electronic form must be identified by the docket number A–97–43. Electronic comments on the SNPR may be filed online at many Federal Depository Libraries.

Dated: February 25, 1999.

John Seitz,

Director, Office of Air Quality Planning and Standards.

[FR Doc. 99–5232 Filed 3–2–99; 8:45 am]

BILLING CODE 6560–50–P

ENVIRONMENTAL PROTECTION AGENCY

40 CFR Part 435

[FRL–6237–8]

RIN 2040–AD14

Effluent Limitations Guidelines and New Source Performance Standards for Synthetic-Based and Other Non-Aqueous Drilling Fluids in the Oil and Gas Extraction Point Source Category

AGENCY: Environmental Protection Agency (EPA).

ACTION: Proposed rule; correction, announcement of meeting.

SUMMARY: The synthetic-based drilling fluids proposed rule was published on February 3, 1999, at 64 FR 5487. Today's notice changes the public meeting announced for Dallas, Texas, on March 5, 1999, to Houston, Texas, on March 17, 1999.

DATES: A public meeting will be held during the comment period, on Wednesday, March 17, 1999, from 9:00 a.m. to 12:00 noon. The previously scheduled meeting for March 5, 1999, is canceled.

ADDRESSES: The public meeting will be held at the University of Houston, Central Campus, Entrance 14, Cullen Boulevard, Science and Research Building, Room 116, Houston, Texas 77204. If you wish to present formal comments at the public meeting you should have a written copy for submittal. No meeting materials will be distributed in advance of the public meeting; all materials will be distributed at the meeting.

FOR FURTHER INFORMATION: Questions concerning this notice can be directed to Joseph Daly at (202) 260–7186 or by facsimile at (202) 260–7185.

SUPPLEMENTARY INFORMATION: The public meeting will provide a brief overview of the proposed rule including the scope of the proposed regulation, the technology basis for developing the limitations, and a discussion of the economic and environmental impacts projected as a result of the proposed rule. The public meeting will provide those attending the opportunity to comment on the proposed rule.

Dated: February 25, 1999.

Tudor T. Davies, Director,

Office of Science and Technology.

[FR Doc. 99–5362 Filed 3–2–99; 8:45 am]

BILLING CODE 6560–50–P

FEDERAL COMMUNICATIONS COMMISSION

47 CFR Parts 2 and 95

[WT Docket No. 99–66, RM–9157, FCC 99–23]

Establishment of a Medical Implant Communications Service in the 402–405 MHz Band

AGENCY: Federal Communications Commission.

ACTION: Proposed rule.

SUMMARY: This document proposes to establish a Medical Implant Communications Service (''MICS'') operating in the 402–405 MHz band. MICS operations would consist of high-speed, ultra low power, nonvoice transmissions to and from implanted medical devices such as cardiac pacemakers and defibrillators. This document also proposes to allocate the 402–405 MHz band to the mobile service on a shared basis, designate this allocation for use by the MICS, and to amend the Commission's Rules to codify service rules for the MICS. The proposed rules will allow use of newly-developed, life-saving medical technology without harming other users of the frequency band.

DATES: Comments are due on or before April 9, 1999, and Reply Comments are due on or before April 26, 1999.

FOR FURTHER INFORMATION CONTACT: Gene Thomson, Policy and Rules Branch, Public Safety and Private Wireless Telecommunications Bureau, (202) 418–0680.

SUPPLEMENTARY INFORMATION: This is a summary of the Commission's *Notice of Proposed Rule Making* (''*Notice*''), WT Docket No. 99–66, FCC 99–23, adopted

February 12, 1999, and released February 24, 1999. The full text of this *Notice* is available for inspection and copying during normal business hours in the FCC Reference Center, Room 246, 1919 M Street NW, Washington, DC. The complete text may be purchased from the Commission's copy contractor, ITS, Inc., 1231 20th St. NW, Washington, DC 20036, telephone (202) 857–3800. The complete (but official) text is also available on the Commission's Internet site at <http:\www.fcc.gov/Bureaus/Wireless/Notices/1999/index.html>under the file name ''fcc9923.txt'' in ASCII text and ''fcc9923.wp'' in Word Perfect format.

Summary of Notice of Proposed Rule Making

1. The Commission has released a *Notice of Proposed Rule Making* that proposes to amend the Table of Frequency Allocations in Section 2.106 of the Commission's Rules, to allocate the 402–405 MHz band on a shared basis and designate this share allocation for use by the Medical Implant Communications Service (MICS), and to revise part 95 of the Commission's Rules to permit the operation of ultra low power MICS transmitters in the 402–405 MHz band without an individual license issued by the Commission.

Administrative Matters

Initial Regulatory Flexibility Analysis

2. As required by the Regulatory Flexibility Act (''RFA''), the Commission has prepared this Initial Regulatory Flexibility Analysis (''IRFA'') of the possible significant economic impact on small entities by the policies and rules proposed in this *Notice of Proposed Rule Making* (''*Notice*''). Written public comments are requested on this IRFA. Comments must be identified as responses to IRFA and must be filed by the deadlines for comments on this *Notice*. The Commission will send a copy of the *Notice*, including this IRFA, to the Chief Counsel for Advocacy of the Small Business Administration.

A. Need for, and Objectives of, the Proposed Rules

3. In this proceeding, the Commission proposes to amend parts 2 and 95 of the Commission's Rules to establish the MICS as a shared allocation in the Non-Government 402–405 MHz band, and to codify the service rules for the MICS. The proposed rules would allow use of newly-developed, life-saving medical technology without harming other users of the applicable frequency bands.

B. Legal Basis

4. Authority for issuance of this *Notice of Proposed Rule Making* is contained in Sections 4(i) and 303(r) of the Communications Act of 1934, as amended, 47 U.S.C. 154(i) and 303(r).

C. Description and Estimate of the Number of Small Entities to Which the Proposed Rules Will Apply

5. The proposed rules apply to manufacturers of medical implant devices and users of the proposed MICS equipment, such as hospitals and clinics. The RFA also includes small governmental entities as a part of the regulatory flexibility analysis. The definition of a small governmental entity is one with a population of less than 50,000. There are 85,006 governmental entities in the nation. This number includes such entities as states, counties, cities, utility districts, and school districts. There are no figures available on what portion of this number has populations of fewer than 50,000. However, this number includes 38,978 counties, cities, and towns, and of those 37,566, or 96 percent, have populations of fewer than 50,000. The Census Bureau estimates that this ratio is approximately accurate for all governmental entities. Of the estimated 85,006 governmental entities, many are hospitals and health care facilities. We ask for comments on what percentage of local government health care facilities are small entities that may be affected by the proposed rules.

D. Description of Projected Reporting, Recordkeeping and Other Compliance Requirements

6. No reporting or recordkeeping requirements would be imposed as a result of the actions proposed in this rule making proceeding. Manufacturers of medical implant transmitters would be required to follow the Commission's normal equipment authorization procedures.

E. Steps Taken to Minimize Significant Economic Impact on Small Entities and Significant Alternatives Considered

7. By making frequency spectrum available, the proposed rules could have a beneficial economic impact on those small business entities that would either manufacture, or contribute to the manufacturing of equipment used in the Medical Implant Communications Service. Individuals who are the recipients of implanted MICS devices would be the greatest beneficiaries economically. While a precise determination of the cost savings is difficult to calculate, two examples are useful. First, over $15M dollars per year would be saved by eliminating the need to conduct quarterly interrogation of implanted cardiac defibrillators in the clinical setting. This estimate does not include the interrogation of pacemakers, which are implanted at a much higher rate than defibrillators. Second, over $37B is currently spent annually on hospitalization due to heart failure. When devices currently under development for the management of heart failure incorporate the MICS technology, it is expected that there will be a meaningful reduction in hospitalization costs. Assuming this impact is as small as 5%, the savings would be nearly $2B per year. We seek comment on our tentative conclusions.

F. Federal Rules That May Duplicate, Overlap, or Conflict With the Proposed Rules

8. None.

Ordering Clauses

9. Accordingly, *It is ordered* that, pursuant to Sections 4(i), and 303(r) of the Communications Act of 1934, as amended, 47 U.S.C. 154(i), and 303(r), notice is hereby given of proposed amendments to parts 2 and 95 of the Commission's Rules, 47 CFR Parts 2 and 95.

10. *It is further ordered* that the Commission's Office of Public Affairs, Reference Operations Division, *Shall send* a copy of this *Notice of Proposed Rule Making,* including the Initial Regulatory Flexibility Analysis to the Chief Counsel for Advocacy of the Small Business Administration.

List of Subjects in 47 CFR Parts 2 and 95

Communications equipment, Radio.

Federal Communications Commission.

Magalie Roman Salas,

Secretary.

[FR Doc. 99–5217 Filed 3–2–99; 8:45 am]

BILLING CODE 6712–01–M

Notices

Federal Register
Vol. 64, No. 41
Wednesday, March 3, 1999

This section of the FEDERAL REGISTER contains documents other than rules or proposed rules that are applicable to the public. Notices of hearings and investigations, committee meetings, agency decisions and rulings, delegations of authority, filing of petitions and applications and agency statements of organization and functions are examples of documents appearing in this section.

DEPARTMENT OF AGRICULTURE

Animal and Plant Health Inspection Service

[Docket No. 98–116–1]

Animal Welfare; Farm Animals Used for Nonagricultural Purposes

AGENCY: Animal and Plant Health Inspection Service, USDA.

ACTION: Notice and request for comments.

SUMMARY: Regulations promulgated under the Animal Welfare Act contain standards for the humane handling, care, treatment, and transportation of certain animals by dealers, exhibitors, researchers, and other regulated entities. We believe that additional guidance is needed to assist regulated entities in meeting the standards in the regulations as they apply to the handling, care, treatment, and transportation of farm animals used for nonagricultural purposes (primarily research and exhibition). We are considering adopting two existing guides: the ''Guide for the Care and Use of Agricultural Animals in Agricultural Research and Teaching,'' published by the Federation of American Societies of Food and Animal Science, and the ''Guide for the Care and Use of Laboratory Animals,'' published by the Institute of Laboratory Animal Resources. The recommendations in these guides represent the most current thinking on appropriate practices for the handling, care, treatment, and transportation of farm animals for nonagricultural purposes. We are requesting public comment on whether or not to adopt these two guides.

DATES: We invite you to comment. We will consider all comments that we receive by May 3, 1999.

ADDRESSES: Please send an original and three copies of your comments to Docket No. 98–116–1, Regulatory Analysis and Development, PPD, APHIS, suite 3C03, 4700 River Road Unit 118, Riverdale, MD 20737–1238. Please state that your comments refer to Docket No. 98–116–1. Comments received may be inspected at USDA, room 1141, South Building, 14th Street and Independence Avenue SW., Washington, DC, between 8 a.m. and 4:30 p.m., Monday through Friday, except holidays. Persons wishing to inspect comments are requested to call ahead on (202) 690–2817 to facilitate entry into the comment reading room.

To obtain a copy of the ''Guide for the Care and Use of Laboratory Animals'': Write to National Academy Press, 2101 Constitution Avenue NW., Lock Box 285, Washington, DC 20055, or call toll-free 1–800–624–6242 or 202–334–3313 in the Washington, DC, metropolitan area.

To obtain a copy of the ''Guide for the Care and Use of Agricultural Animals in Agricultural Research and Teaching'': Write to Executive Committee, Federation of American Societies of Food Animal Sciences, 111 North Dunlap Avenue, Savoy, IL 61874.

Both guides are also available for inspection in our comment reading room in the USDA South Building and in any Animal Care Regional Office.

FOR FURTHER INFORMATION CONTACT: Dr. Bettye K. Walters, Staff Veterinarian, Animal Care, APHIS, USDA, 4700 River Road Unit 84, Riverdale, MD 20737–1234, (301) 734–7833; or e-mail: bettye.k.walters@usda.gov.

SUPPLEMENTARY INFORMATION: The Animal Welfare Act (AWA) (7 U.S.C. 2131 *et seq.*) authorizes the Secretary of Agriculture to promulgate standards governing the humane handling, care, treatment, and transportation of certain animals by dealers, exhibitors, and other regulated entities. The Secretary of Agriculture has delegated the responsibility for enforcing the AWA to the Administrator of the Animal and Plant Health Inspection Service (APHIS). Regulations established under the AWA are contained in 9 CFR parts 1, 2, and 3. The APHIS Animal Care program ensures compliance with the AWA regulations by conducting inspections of premises with regulated animals.

APHIS is responsible for regulating the humane handling, care, treatment, and transportation of farm animals when they are used for nonagricultural purposes, such as for research or exhibition. APHIS inspects regulated entities that use farm animals under the regulations in 9 CFR part 3, subpart F.

History

The AWA, enacted in 1966 and amended in 1970, 1976, 1985, and 1990, authorizes APHIS to regulate farm animals, such as cattle, sheep, pigs, and goats, when the animals are used for biomedical or other nonagricultural research or nonagricultural exhibition. (An example of agricultural exhibition would be a livestock show at a State or county fair.) Before 1990, we did not enforce the animal welfare regulations with respect to farm animals, as a matter of policy. In light of increased use of farm animals in biomedical research and nonagricultural exhibition, and in light of comments and inquiries received from the public, we reevaluated this policy. In 1990, we gave public notice in the **Federal Register** (55 FR 12667, Docket No. 89–223, published April 5, 1990) of our intent to regulate farm animals under the AWA in accordance with the standards in 9 CFR part 3, subpart F, ''Specifications for the Humane Handling, Care, Treatment, and Transportation of Warmblooded Animals Other Than Dogs, Cats, Rabbits, Hamsters, Guinea Pigs, Nonhuman Primates, and Marine Mammals'' (referred to below as the regulations). These regulations already existed and are not specific to farm animals.

Since 1990, we have considered adopting standards specific to farm animals. The needs of farm animals can be different from other kinds of animals typically used in research and exhibition. Farm animals used in activities regulated under the AWA are maintained in both agricultural and nonagricultural environments. The research and exhibition communities, as well as other members of the public, have requested that we provide more specific guidance than what the regulations contain for the humane care of farm animals used in regulated activities. We held three public meetings to gather input from Federal and public sources on whether and how to strengthen the regulations pertaining to the care and use of farm animals in activities covered by the AWA. The last public meeting was held in College Park, MD, on July 7, 1994.

The Guides

We have reviewed comments and literature received at those meetings. We have determined at this time to offer guidance on how regulated entities can comply with the standards in the regulations as they apply to farm animals. Regulated entities would benefit in that they would have a better understanding of ways to meet the standards in the regulations. This would help ensure that farm animals used in regulated activities are cared for in a humane manner.

Two guides that comprehensively address the humane care of farm animals already exist. These are the ''Guide for the Care and Use of Agricultural Animals in Agricultural Research and Teaching,'' published by the Federation of American Societies of Food Animal Sciences, and the ''Guide for the Care and Use of Laboratory Animals,'' published by the Institute of Laboratory Animal Resources. These two publications are commonly known as ''the Ag Guide'' and ''the ILAR Guide,'' respectively.

The ILAR Guide is a general guide that recommends practices to ensure the humane care of any vertebrate animal used in biomedical and behavioral research, teaching, or testing. The ILAR guide does not specifically address farm animals, but they are included in the general scope of the guide. We consider the general principles in the ILAR guide to be appropriate for application to the care and use of farm animals, primarily when they are maintained in laboratory settings.

The Ag Guide contains recommendations to ensure the humane care of agricultural animals used in research and teaching that are maintained in a simulated or actual production agricultural setting. The Ag Guide contains general principles that apply to all farm animals, as well as specific recommendations for animals such as cattle, horses, sheep, goats, and swine.

We have reviewed these two guides extensively and have determined that they represent the most current and complete scientific information available on the humane care of farm animals used for nonagricultural purposes. The guides are already in use by most research institutions regulated by APHIS that use farm animals. Specifically, any institution that receives funding from the National Institutes of Health or that is accredited by an organization such as the Association for Assessment and Accreditation of Laboratory Animal Care International (AAALAC International) must use the guides. The recommendations in these guides reflect the most current thinking on appropriate practices for the handling, care, treatment, and transportation of farm animals used for nonagricultural purposes.

Adoption of the Guides

This document notifies the public that we are considering adopting these two guides to help regulated entities understand how to meet the standards in the regulations. We are seeking public comment on whether or not to adopt these two guides.

Adoption of these guides would be intended only as guidance. Adoption of these guides would not create or confer any rights for or on any person and would not operate to bind APHIS or the public.

As an example, the regulations specify general requirements for feeding (see § 3.129(a)) that state ''food shall be wholesome, palatable, and free from contamination and of sufficient quantity and nutritive value to maintain all animals in good health. The diet shall be prepared with consideration for age, species, condition, size, and type of the animal.'' The Ag Guide offers species-specific recommendations on feeding that would be acceptable to APHIS for meeting the feeding standards in the regulations. For example, for horses and cattle, the Ag Guide includes information on nutritional and other considerations when a feeding program includes grazing on pasture or range land and makes recommendations on feed that should be provided to avoid colic and unhealthy behaviors such as wood or tail chewing. The ILAR Guide contains recommendations for feeding that are not species-specific, but that provide guidance on things such as keeping food free of contamination and retaining nutritive value that is applicable to a laboratory setting.

The ILAR Guide and the Ag Guide also contain recommendations concerning animals and areas that are not covered under the regulations. We are considering using the guides only to supplement understanding of how to meet the standards in the regulations. Those portions of the guides that do not relate to the regulations would not be used. The Ag Guide would be used when farm animals are maintained in a traditional agricultural setting, and the ILAR Guide would be used when farm animals are maintained in a laboratory setting.

We recognize that there are numerous other published guides, as well as other sources of information, that provide recommendations on the humane care of farm animals in various settings. We are considering adopting the ILAR Guide and the Ag Guide because, among other reasons, they are already widely used, are the most complete guides available, and are relatively inexpensive and easily obtained. The Ag Guide costs $10.00 per copy and the ILAR Guide costs $9.95 per copy. They also represent the most current thinking on appropriate practices for the handling, care, treatment, and transportation of farm animals used for nonagricultural purposes. However, our adoption of these guides would not prevent regulated entities from using recommendations from other sources, as long as the chosen practice satisfies the standards in the regulations. Other practices could be used, as well, if the practices also satisfy the standards in the regulations.

Because these guides are not published by APHIS, we would not be able to provide copies of these guides to the public. However, the guides are relatively inexpensive and readily available to regulated entities (see directions for obtaining copies of the guides under **ADDRESSES** at the beginning of this document). APHIS would assist regulated entities in obtaining copies, if necessary.

Done in Washington, DC, this 25th day of February 1999.

Joan M. Arnoldi,

Acting Administrator, Animal and Plant Health Inspection Service.

[FR Doc. 99–5244 Filed 3–2–99; 8:45 am]

BILLING CODE 3410–34–P

DEPARTMENT OF AGRICULTURE

Food and Nutrition Service

Nutrition Program for the Elderly; Initial Level of Assistance From October 1, 1998 to September 30, 1999

AGENCY: Food and Nutrition Service, USDA.

ACTION: Notice.

SUMMARY: This notice announces the initial level of per-meal assistance for the Nutrition Program for the Elderly (NPE) for Fiscal Year 1999. The Fiscal Year 1999 initial level of assistance is set at $.5539 for each eligible meal in accordance with section 311(a)(4) of the Older Americans Act of 1965, as amended by section 310 of the Older Americans Act Amendments of 1992 and preempted by the Agriculture, Rural Development, Food and Drug Administration, and Related Agencies Appropriations Act, 1996.

EFFECTIVE DATE: October 1, 1998.

FOR FURTHER INFORMATION CONTACT: Heddy Turpin, Acting Chief, Schools and Institutions Branch, Food Distribution Division, Food and Nutrition Service, U.S. Department of Agriculture, 3101 Park Center Drive, Alexandria, Virginia 22302–1594 or telephone (703) 305–2644.

SUPPLEMENTARY INFORMATION:

Executive Order 12372

This program is listed in the Catalog of Federal Domestic Assistance under Nos. 10.550 and 10.570 and is subject to the provisions of Executive Order 12372, which requires intergovernmental consultation with State and local officials (7 CFR part 3015, subpart V, and final rule-related notices published at 48 FR 29114, June 24, 1983 and 49 FR 22676, May 31, 1984.)

Paperwork Reduction Act of 1995

This notice imposes no new reporting or recordkeeping provisions that are subject to Office of Management and Budget review in accordance with the Paperwork Reduction Act of 1995 (44 U.S.C. 3507).

Regulatory Flexibility Act

This action has been reviewed with regards to the requirements of the Regulatory Flexibility Act of 1980 (5 U.S.C. 601–612). The Administrator of the Food and Nutrition Service (FNS) has certified that this action will not have a significant economic impact and will not affect a substantial number of small entities. The procedures in this notice would primarily affect FNS regional offices, and the State Agencies on aging and local meal providers. While some of these entities constitute small entities, a substantial number will not be affected. Furthermore, any economic impact will not be significant.

Legislative Background

Section 310 of Public Law (Pub. L.) 102–375, the Older Americans Act Amendments of 1992, amended section 311(a)(4) of the Older Americans Act of 1965, 42 U.S.C. 3030a(a)(4), to require the Secretary of Agriculture to maintain an annually programmed level of assistance equal to the greater of: (1) The current appropriation divided by the number of meals served in the preceding fiscal year; or (2) 61 cents per meal adjusted annually beginning with Fiscal Year 1993 to reflect changes in the Consumer Price Index. Section 311(c)(2) of the Older Americans Act (42 U.S.C. 3030a(c)(2)) was amended to provide that the final reimbursement claims must be adjusted so as to utilize the entire program appropriation for the fiscal year for per-meal support. However, the Agriculture, Rural Development, Food and Drug Administration, and Related Agencies Appropriations Act of 1996 (Pub. L. 104–37) imposed, for Fiscal Year 1996 and succeeding years, the same NPE rate management requirements as applied to Fiscal Year 1994. That is, Title IV, Domestic Food Programs, of the Appropriations Act provides that ''* * * hereafter notwithstanding any other provision of law, for meals provided pursuant to the Older Americans Act of 1965, a maximum rate of reimbursement to States will be established by the Secretary, subject to reduction if obligations would exceed the amount of available funds, with any unobligated funds to remain available only for obligation in the fiscal year beginning October 1, 1996.''

Notwithstanding the initial rates established by the Older Americans Act, the Department is required to comply with the spending clause of the U.S. Constitution and 31 U.S.C. 1341(a)(1)(A) (known as the Antideficiency Act), which prohibit the obligation or expenditure of funds in excess of the available appropriation. Thus the Department is required to establish (and if necessary, adjust) rates in such a manner as to not exceed the program appropriation.

Fiscal Year 1998 Level of Assistance

Based on its projection of the number of meals to be claimed during the fiscal year, and in light of constitutional and statutory prohibitions on obligating or spending funds in excess of the available appropriation, the Department announced an initial per-meal reimbursement rate of $.5607 for Fiscal Year 1998, the highest rate which it believed could be sustained throughout the fiscal year. This initial level of per-meal assistance was announced in the April 2,1998 **Federal Register** (62 FR 16242).

The Department's meal service projection for Fiscal Year 1998 assumed a slightly higher rate of growth than occurred in the preceding fiscal year. This initial per-meal support level of $.5607 was sustained throughout Fiscal Year 1998, and thus no adjustment was necessary to keep expenditures within the limit of the $140 million NPE appropriation established by Pub. L. 104–180. Funds in the estimated amount of $500 thousand were not paid out for Fiscal Year 1997 and will, in accordance with the legislative mandate in Pub. L. 104–180, be carried over into Fiscal Year 1998 and expended in per-meal reimbursement for that year.

Fiscal Year 1999 Initial Level of Assistance

It is the Department's goal to establish the highest rate that can be sustained throughout the fiscal year so as to maximize the flow of program funds to States during the fiscal year. However, the Department wants also to minimize the possibility of a rate reduction and the hardship it causes to program operators. In order to guard against the need for a reduction, the Department, once again, has projected a slightly higher rate of growth in meal service than occurred in the preceding fiscal year. Based on its projections, the Department announces an initial per-meal support level of $.5539, which will not be increased, and which will be decreased only if necessary to keep expenditures within the limit of the $140 million NPE Fiscal Year 1999 appropriation established by Pub. L. 105–277. Any of these funds not paid out for Fiscal Year 1999 reimbursement will, in accordance with Pub. L. 105–277, remain available through Fiscal Year 2000. In the unlikely event that the rate needs to be decreased, States will be notified directly.

Dated: February 25, 1999.

Samuel Chambers,

Administrator, Food and Nutrition Service.

[FR Doc. 99–5226 Filed 3–2–99; 8:45 am]

BILLING CODE 3410–30–U

DEPARTMENT OF AGRICULTURE

Grain Inspection, Packers and Stockyards Administration

Designation for the Plainview (TX), Barton (KY), and North Dakota (ND) Areas

AGENCY: Grain Inspection, Packers and Stockyards Administration (GIPSA).

ACTION: Notice.

SUMMARY: GIPSA announces designation of the following organizations to provide official services under the United States Grain Standards Act, as amended (Act):

Plainview Grain Inspection and Weighing Service, Inc. (Plainview);

J.W. Barton Grain Inspection Service, Inc. (Barton); and

North Dakota Grain Inspection Service, Inc. (North Dakota).

EFFECTIVE DATES: June 1, 1999, for Plainview and July 1, 1999, for Barton and North Dakota.

ADDRESSES: USDA, GIPSA, Janet M. Hart, Chief, Review Branch, Compliance Division, STOP 3604, Room 1647–S,

1400 Independence Avenue, S.W., Washington, DC 20250–3604.

FOR FURTHER INFORMATION CONTACT: Janet M. Hart, at 202–720–8525.

SUPPLEMENTARY INFORMATION: This action has been reviewed and determined not to be a rule or regulation as defined in Executive Order 12866 and Departmental Regulation 1512–1; therefore, the Executive Order and Departmental Regulation do not apply to this action.

In the October 1, 1998, **Federal Register** (63 FR 52678), GIPSA asked persons interested in providing official services in the geographic areas assigned to Plainview, Barton, and North Dakota to submit an application for designation. Applications were due by October 30, 1998. Plainview, Barton, and North Dakota, the only applicants, each applied for designation to provide official services in the entire area currently assigned to them.

Since Plainview, Barton, and North Dakota were the only applicants, GIPSA did not ask for comments on them.

GIPSA evaluated all available information regarding the designation criteria in Section 7(f)(1)(A) of the Act and, according to Section 7(f)(1)(B), determined that Plainview, Barton, and North Dakota are able to provide official services in the geographic areas for which they applied.

Effective June 1, 1999, and ending March 31, 2002, Plainview is designated to provide official services in the geographic areas specified in the October 1, 1998, **Federal Register**. Effective July 1, 1999, and ending March 31, 2002, Barton and North Dakota are designated to provide official services in the geographic areas specified in the October 1, 1998, **Federal Register**.

Interested persons may obtain official services by contacting Plainview at 806–293-1364, Barton at 502–683–0616, and North Dakota at 701–293–7420.

Authority: Pub. L. 94–582, 90 Stat. 2867, as amended (7 U.S.C. 71 et seq.).

Dated: February 22, 1998.

Neil E. Porter,

Director, Compliance Division.

[FR Doc. 99–5224 Filed 3–2–99; 8:45 am]

BILLING CODE 3410–EN–P

DEPARTMENT OF AGRICULTURE

National Agricultural Statistics Service

Notice of Intent to Extend and Revise a Currently Approved Information Collection

AGENCY: National Agricultural Statistics Service, USDA.

ACTION: Notice and request for comments.

SUMMARY: In accordance with the Paperwork Reduction Act of 1995 (Pub. L. 104–13) and Office of Management and Budget (OMB) regulations at 5 CFR Part 1320 (60 FR 44978, August 29, 1995), this notice announces the National Agricultural Statistics Service's (NASS) intention to request an extension for and revision to a currently approved information collection, the Agricultural Labor Survey.

DATES: Comments on this notice must be received by May 7, 1999 to be assured of consideration.

FOR FURTHER INFORMATION CONTACT: Contact Rich Allen, Associate Administrator, National Agricultural Statistics Service, U.S. Department of Agriculture, 1400 Independence Avenue SW, Room 4117 South Building, Washington, DC 20250–2000, (202) 720–4333.

SUPPLEMENTARY INFORMATION:

Title: Agricultural Labor Survey.

OMB Number: 0535–0109.

Expiration Date of Approval: September 30, 1999.

Type of Request: Intent to extend and revise a currently approved information collection.

Abstract: The primary objective of the National Agricultural Statistics Service is to prepare and issue State and national estimates of crop and livestock production. The Agricultural Labor Survey provides statistics on the number of agricultural workers, hours worked, and wage rates. Number of workers and hours worked are used to estimate agricultural productivity. Wage rates are used in the administration of the ''H–2A'' Program and for setting Adverse Effect Wage Rates. Agricultural Labor Survey data are also used to carry out provisions of the Agricultural Adjustment Act. The Agricultural Labor Surveys has approval from OMB for a 3-year period. NASS intends to request that the survey be approved for another 3 years. These data will be collected under the authority of 7 U.S.C. 2204(a). Individually identifiable data collected under this authority are governed by Section 1770 of the Food Security Act of 1985, 7 U.S.C. 2276, which requires USDA to afford strict confidentiality to non-aggregated data provided by respondents.

Estimate of Burden: Public reporting burden for this collection of information is estimated to average 15 minutes per response.

Respondents: Farms and businesses.

Estimated Number of Respondents: 12,900.

Estimated Total Annual Burden on Respondents: 11,000 hours.

Copies of this information collection and related instructions can be obtained without charge from Larry Gambrell, the Agency OMB Clearance Officer, at (202) 720–5778.

Comments

Comments are invited on: (a) whether the proposed collection of information is necessary for the proper performance of the functions of the agency, including whether the information will have practical utility; (b) the accuracy of the agency's estimate of the burden of the proposed collection of information including the validity of the methodology and assumptions used; (c) ways to enhance the quality, utility, and clarity of the information to be collected; and (d) ways to minimize the burden of the collection of information on those who are to respond, including through the use of appropriate automated, electronic, mechanical, or other technological collection techniques or other forms of information technology. Comments may be sent to: Larry Gambrell, Agency OMB Clearance Officer, U.S. Department of Agriculture, 1400 Independence Avenue SW, Room 4162 South Building, Washington, DC 20250–2000. All responses to this notice will be summarized and included in the request for OMB approval. All comments will also become a matter of public record.

Signed at Washington, DC, January 27, 1999.

Rich Allen,

Associate Administrator, National Agricultural Statistics Service.

[FR Doc. 99–5227 Filed 3–2–99; 8:45 am]

BILLING CODE 3410–20–M

BARRY GOLDWATER SCHOLARSHIP AND EXCELLENCE IN EDUCATION FOUNDATION

Sunshine Act Meeting

TIME AND DATE: 2 p.m., Wednesday, March 24, 1999.

PLACE: U.S. Cannon House Office Building, Washington, DC 20150.

STATUS: The meeting will be open to the public.

MATTERS TO BE CONSIDERED:

1. Review and approval of the minutes of the March 18th, 1998 Board of Trustees meeting.

2. Report on financial status of the Foundation fund:

A. Review of investment policy and current portfolio.

3. Report on results of Scholarship Review Panel:

A. Discussion and consideration of scholarship candidates.

B. Selection of Goldwater Scholars.

4. Other Business brought before the Board of Trustees.

CONTACT PERSON FOR MORE INFORMATION: Gerald J. Smith, President, Telephone: (703) 756–6012.

Gerald J. Smith,

President.

[FR Doc. 99–5344 Filed 3–1–99; 12:07 pm]

BILLING CODE 4738–91–M

DEPARTMENT OF COMMERCE

Submission For OMB Review; Comment Request

DOC has submitted to the Office of Management and Budget (OMB) for clearance the following proposal for collection of information under the provisions of the Paperwork Reduction Act (44 U.S.C. chapter 35).

Agency: Bureau of the Census.

Title: Informal Caregivers Survey (ICS)—Component of the Long Term Care Survey (LTC).

Form Number(s): LTC–1, LTC–2, LTC–3, LTC–4, LTC–7, LTC–10, BNL–1, LTC–9P(L1), LTC–9(1), LTC–9(L2), LTC–9(3).

Agency Approval Number: 0607–0778.

Type of Request: Revision of a currently approved collection.

Burden: 11,731 hours.

Number of Respondents: 22,985.

Avg Hours Per Response: 30 minutes.

Needs and Uses: The Census Bureau seeks OMB approval to conduct the Informal Caregivers Survey (ICS) as a component of the Long Term Care Survey (LTC) which is already approved by OMB. The LTC collects information on the health and functional status of the elderly population in the United States. The ICS will collect information from the persons who provide help to impaired LTC respondents concerning the type and amount of care given, the caregiver's functional and health status, whether the caregiver is paid, and the caregiver's relation to the impaired person. Results of the ICS will provide planners with information to determine how to meet the future health care needs of people 65 years old and over.

The ICS is sponsored by the Center for Demographic Studies, Duke University, with funding from the Office of the Assistant Secretary for Planning and Evaluation, the U.S. Department of Health and Human Services, and the National Institute on Aging. The Census Bureau will conduct the ICS under contract with Duke University.

Affected Public: Individuals and households.

Frequency: On occasion.

Respondent's Obligation: Voluntary.

Legal Authority: Title 42, USC, Section 285e–1, and Title 15, USC, Section 1525.

OMB Desk Officer: Nancy Kirkendall, (202) 395–7313.

Copies of the above information collection proposal can be obtained by calling or writing Linda Engelmeier, DOC Forms Clearance Officer, (202) 482–3272, Department of Commerce, room 5327, 14th and Constitution Avenue, NW, Washington, DC 20230.

Written comments and recommendations for the proposed information collection should be sent within 30 days of publication of this notice to Nancy Kirkendall, OMB Desk Officer, room 10201, New Executive Office Building, Washington, DC 20503.

Dated: February 26, 1999.

Linda Engelmeier,

Departmental Forms Clearance Officer, Office of the Chief Information Officer.

[FR Doc. 99–5269 Filed 3–2–99; 8:45 am]

BILLING CODE 3510–DS–P

DEPARTMENT OF COMMERCE

Bureau of the Census

Census 2000 Test Program

ACTION: Proposed Collection; Comment Request.

SUMMARY: The Department of Commerce, as part of its continuing effort to reduce paperwork and respondent burden, invites the general public and other Federal agencies to take this opportunity to comment on proposed and/or continuing information collections, as required by the Paperwork Reduction Act of 1995, Pub. L. 104–13 (44 U.S.C. 3506(c)(2)(A)).

DATES: Written comments must be submitted on or before May 3, 1999.

ADDRESSES: Direct all written comments to Linda Engelmeier, Departmental Forms Clearance Officer, Department of Commerce, Room 5327, 14th and Constitution Avenue, NW, Washington, DC 20230.

FOR FURTHER INFORMATION CONTACT: Requests for additional information or copies of the information collection instrument(s) and instructions should be directed to Randall Neugebauer, Bureau of the Census, Room BH104–2, Washington, DC 20233; (301) 457–3952.

SUPPLEMENTARY INFORMATION:

I. Abstract

The Census Bureau plans to test several methodologies, techniques, and strategies in a ''census environment.'' It is important to examine innovative ideas in the environment for which they are intended to accurately measure effectiveness and feasibility. The Census Bureau plans four separate tests—which are referred to as experiments because they must be done in a census environment. They are referred to as the Alternative Questionnaire and Mail Treatment (AQMT) experiment, the Administrative Records Census in 2000 Experiment (AREX2000), the Social Security Number [SSN], Privacy Attitudes, and Notification (SPAN) experiment, and the Response Mode and Incentive Experiment (RMIE).

Alternative Questionnaire and Mail Treatment (AQMT) Experiment

Objectives of the AQMT are to continue efforts to develop a user friendly mailout questionnaire that can be accurately completed by respondents and to continue examination of methods to increase mail response in a census environment. The design of the residency rules, structure of the short form (booklet versus bifold), and navigation instructions (intended to assist the respondent through the questionnaire accurately) are examined in the AQMT. The AQMT comprises nine panels with a mailout size of 5,000 each. The households are selected randomly at the national level. Respondents will receive one of three short experimental forms or one of four long experimental forms instead of the standard census form.

The success of the experimental forms will be determined by the analysis of various statistics calculated from the experimental forms and compared to the similar data from ''control'' forms (i.e., data from census forms that exclude the experimental factors). The statistics include mail response rate, data item nonresponse rates, ''correctness'' of the count of household members question, and the rate at which respondents incorrectly skip questions that they should answer.

Administrative Records Census in 2000 Experiment (AREX2000)

The principle objective of this experiment is to simulate an administrative records census for selected test areas and to compare the results and costs to Census 2000. An administrative records census is defined as a census that uses administrative records as its primary data collection method and that provides content and

geographic detail, which meet reapportionment and redistricting requirements.

AREX2000 will use data from other government agencies to construct a person data base for possibly four test sites; this will impose no respondent burden. This administrative records data base will be used to compare results and cost to Census 2000. Test sites have not been determined. There are three supplementary activities that need to occur in order to ensure measurable results:

1. A card mailout to roughly 70,000 P.O. Box addresses to obtain physical location addresses.
2. A Coverage Improvement Survey (CIS) that will be administered to 18,000 housing units. These interviews will be conducted to estimate coverage error and impute missing persons in the administrative records census.
3. A follow up interview to the CIS to about 10,800 housing units will be conducted to clarify census day residency status of administrative record persons.

Social Security Number (SSN), Privacy Attitudes, and Notification (SPAN) Experiment

The purpose of the SPAN is to obtain behavior and attitudinal data on several topics related to the use of administrative records. This includes how the public responds to requests for Social Security numbers (*SSN*s) on census questionnaires, how the public responds to differently worded notifications about the Census Bureau's use of administrative records, and what are the public's attitudes on privacy and confidentiality pertaining to the notion of an ''administrative records census.''

The SPAN will determine: (a) what effect a request for the SSN for every household member has on mail response and item response; (b) what effect a request for an SSN for only the person filling-out the questionnaire has on mail response and item response; (c) the accuracy of the respondent-provided SSNs; and (d) what effect different notifications about the Census Bureau's possible use of administrative records has on mail and item response rates. The methodology for achieving these objectives involves the mailout of six short form and two long form panels for a total of 40,000 forms during Census 2000.

There are two notifications—referred to as ''general'' and ''specific.'' Each notification is included in the cover letter and describes how or why the Census Bureau may use administrative records data from other Federal agencies. A ''general'' notification mentions the Census Bureau's possible use of statistical data from other Federal agencies, while the ''specific'' notification goes further to mention actual Federal agencies, such as, the Internal Revenue Service, Social Security Administration, and ''social service agencies.''

The SPAN also includes a telephone Survey of Privacy Attitudes (SPA) that measures the public's attitudes on privacy and confidentiality issues pertaining to the notion of an ''administrative records census.'' The survey is conducted in two stages; a pre-measurement will be conducted before any Census 2000 promotion, outreach, and paid advertising occurs. The post-measurement will occur shortly after Census Day, April 1, 2000. The reason for the pre- and post-measurements is to enable examination of the ''census environment's'' effect on privacy attitudes. Specific objectives are to: (a) determine the public's opinion of the Federal government and the Census Bureau in general; (b) assess change in the public's attitudes on privacy-related issues using results from studies done in 1995 and 1996; and (c) determine the public's opinion of the Census Bureau's use of administrative records, possible interest in collecting SSNs in the future, and the notion of an ''administrative records census.'' Each measurement group is a national random sample of 2,000 households.

Response Mode and Incentive Experiment (RMIE)

Goals of this test are: (a) to see if the use of prepaid calling cards as an incentive to respond to the census (using the telephone or the Internet) will significantly increase response and (b) to measure what extent respondents choose to use these response options. A sample of households will receive a prepaid telephone card with their Census 2000 questionnaire and a letter encouraging respondents to provide their response via one of three modes: telephone option 1 where respondents are prompted through the short form by machine and pre-recorded voice (referred to as ''automated spoken questionnaire''), telephone option 2 where the respondents are prompted through the short form by human operator using a computer assisted telephone questionnaire, or by accessing the short form using the Census Bureau's Internet site. In addition, a sample of households will be offered the same response options but without the calling card incentive to do so. A sample of non-responding households to Census 2000 also will be given the option to respond using one of the different modes with the incentive. After completing an interview, the calling card would be activated for use by the respondent. Effects on census costs (i.e., printing and mailing, nonresponse field follow up, outreach, data processing, and capture) and response to the census will be examined. The calling cards will have the Census logo to generate publicity for Census 2000, as well as the logo for the telephone card provider.

For households in the above experiments (excluding all of AREX2000), the experimental form is the sole Census 2000 form; i.e., households randomly selected for involvement will not additionally receive an official Census 2000 form. Households not completing and returning the experimental form will be included in the nonresponse follow up efforts of Census 2000.

Because the experimental forms are official census responses and replace the standard short- and long-forms that would otherwise be sent to the households involved in the experiments, respondent burden is already accounted for in the OMB approval for Census 2000 (OMB number 0607–0856). The burden hour estimate under item III., below, only accounts for burden that is additional to Census 2000. The exceptions that involve additional burden hours are all of AREX2000, the SPA, and the short form panels of the SPAN that include a request for SSN of all household members.

II. Method of Collection

The collection methodology varies between the experiments; please see below.

AQMT—Mail out of experimental short and long forms.

AREX2000—Card mail out eliciting physical location address.
- —CIS by personal interview (this may employ a ''computer-assisted personal interviewing'' device).
- —CIS Follow up by personal interview using a paper form.

SPAN—Mail out of experimental short and long forms.
- —SPA by list-assisted random digit dialing (RDD) telephone interview.

RMIE—Mail out of short forms with phone card and letter insert encouraging response either by automated spoken questionnaire (telephone option 1), telephone and a human operator, or accessing the short form over the Census Bureau's Internet site.

III. Data

OMB Number: Not available.

Form Numbers: Please note that most AQMT, SPAN, and RMIE questionnaires are identical to the Census 2000 short and long forms but have unique form numbers. Exceptions where differences exist are noted in *italics*, below.

AQMT S–800A.1 through S–800A.3 [short forms]
S–800A.2 = [Subject matter awaiting final approval of the Census Bureau.]
S–800A.3 = Residence rules designed as booklet
S–800A.4 = Revised set of residence rules
S–801A.1(L) through S–801A.3(L) [short form cover letters]
S–802A.1 through S–802A.3 [outgoing envelopes-short form]
S–803A.1 through S–803A.3 [return envelopes-short form]
S–800B.1 through S–800B.5 [long forms]
S–800B.2 = 'Go to' Instruction
S–800B.3 = Reverse Print Instruction
S–800B.4 = Arrow Format
S–800B.5 = Right Box Format
S–801B.1(L) through S–801B.5(L) [long form cover letters]
S–802B.1 through S–802B.5 [outgoing envelopes-long form]
S–803B.1 through S–803B.5 [return envelopes-long form]
S–804 [reminder post card]
AREX2000 Forthcoming. Form designations will be in the S–9###.# series.
SPAN S–700A.1 through S–700A.7 [short forms]
S–700A.2 = Request for SSN added for all persons
S–700A.3 = Request for SSN added for one person
S–700A.4 = Request for SSN added for all persons
S–700A.5 = Request for SSN added for all persons
S–701A.1(L) through S–701A.7(L) [short form cover letters]
S–702A.1 through S–702A.7 [outgoing envelopes-short form]
S–703A.1 through S–703A.7 [return envelopes-short form]
S–704 [reminder postcard]
S–700B.1 through S–700B.3 [long forms]
S–701B.1(L) through S–701B.3(L) [long form cover letters]
S–702B.1 through S–702B.4 [outgoing envelopes-long form]
S–703B.1 through S–703B.4 [return envelopes-long form]
RMIE—Forthcoming.

Type of Review: Regular submission.

Affected Public: Individuals or households.

Estimated Number of Respondents:

AQMT = 35,000 (15,000 short form recipients; 20,000 long form recipients)
AREX2000 = 98,800 (70,000 post card recipients; 18,000 CIS personal interview respondents; 10,800 CIS follow up interview respondents)
SPAN = 44,000 (30,000 short form recipients; 10,000 long form recipients; 4,000 SPA respondents)
RMIE = 22,500
TOTAL = 200,300 respondents

Estimated Time Per Response:

AQMT—10 minutes for the experimental short form
—38 minutes for the experimental long form
AREX2000—1.5 minutes for the post card
—12.5 minutes for the CIS
—7 minutes for the CIS follow up interview
SPAN—10 minutes for the experimental short form
—11 minutes for experimental short form with the SSN request
—38 minutes for the experimental long form
—15 minutes for the SPA
RMIE—less than 10 minutes for the short form automated spoken questionnaire
—less than 10 minutes for the telephone interview with a human operator (telephone option)
—10 minutes for the short form on the Census Bureau's Internet home page
—10 minutes for recipients opting to return hard-copy short form questionnaires

Estimated Total Annual Burden Hours: PLEASE note that only burden hours that are in addition to what is already accounted for by Census 2000 are shown below.

AQMT = Zero (15,165 hours already accounted for)
AREX2000 = 6,758 hours
SPAN = 1,255 hours, for the SPA and the addition of the SSN request to the SSN experimental panels (11,340 hours already accounted for)
RMIE = Zero (3,757.5 hours already accounted for—note that estimated time for response among the three modes is equal or less than 10 minutes)
TOTAL = 8,013 hours

Estimated Total Annual Cost: There is no cost to the respondent other than the time to complete the information request.

Respondent's Obligation:

AQMT—Mandatory
AREX2000—Voluntary
SPAN—Mandatory and Voluntary. Response to short and long form questions is mandatory. However, response to the SSN request (which is only on the short form), is voluntary. Response to the SPA is voluntary.
RMIE—Mandatory

Legal Authority: Title 13 United States Code, Sections 141 and 193.

IV. Request for Comments

Comments are invited on: (a) Whether the proposed collection of information is necessary for the proper performance of the functions of the agency, including whether the information shall have practical utility; (b) the accuracy of the agency's estimate of the burden (including hours and cost) of the proposed collection of information; (c) ways to enhance the quality, utility, and clarity of the information to be collected; and (d) ways to minimize the burden of the collection of information on respondents, including through the use of automated collection techniques or other forms of information technology.

Comments submitted in response to this notice will be summarized and/or included in the request for OMB approval of this information collection; they also will become a matter of public record.

Dated: February 26, 1999.

Linda Engelmeier,

Departmental Forms Clearance Officer, Office of the Chief Information Officer.

[FR Doc. 99–5268 Filed 3–2–99; 8:45 am]

BILLING CODE 3510–07–P

DEPARTMENT OF COMMERCE

Bureau of Export Administration

Survey of U.S. Chemical Industry Regarding Activities Involving Chemicals Identified in Schedule 2 of the Chemical Weapons Convention's Annex on Chemicals

ACTION: Proposed collection; comment request.

SUMMARY: The Department of Commerce, as part of its continuing effort to reduce paperwork and respondent burden, invites the general public and other Federal agencies to take this opportunity to comment on proposed and/or continuing information collections, as required by the Paperwork Reduction Act of 1995, Public Law 104–13 (44 U.S.C. 3506(c)(2)(A)).

DATES: Written comments must be submitted on or before May 3, 1999.

ADDRESSES: Direct all written comments to Linda Engelmeier, Departmental Clearance Officer, Department of Commerce, Room 5327, 14th and Constitution Avenue, NW, Washington DC 20230.

FOR FURTHER INFORMATION CONTACT: Requests for additional information or copies of the information collection instrument(s) and instructions should be directed to Dawnielle Battle, Department of Commerce, Room 6881, 14th and Constitution Avenue, NW, Washington, DC 20230.

SUPPLEMENTAL INFORMATION:

I. Abstract

The Chemical Weapons Convention (CWC) is a multilateral arms control treaty that seeks to achieve an international ban on chemical weapons (CW). The CWC was signed by the United States on January 13, 1993, and ratified by the U.S. Senate on April 24, 1997. The CWC prohibits, *inter alia,* the use, development, production, acquisition, stockpiling, retention, and direct or indirect transfer of chemical weapons.

The proposed new information collection by BXA will attempt to survey, by telephone, private companies either known to be or are suspected to be engaged in activities involving Schedule 2 chemicals. The survey will help BXA identify and determine which U.S. commercial facilities have a Schedule 2 reporting requirement and will thereby assist the U.S. Government in its efforts to be fully compliant with CWC reporting obligations.

II. Method of Collection

Telephone survey.

III. Data

OMB Number: 0694-new.

Form Number: N/A.

Type of Review: Submission for new collection.

Affected Public: Individuals, businesses or other for-profit and not-for-profit institutions.

Estimated Number of Respondents: 100.

Estimated Time Per Response: 1 hour per response.

Estimated Total Annual Burden Hours: 100.

Estimated Total Annual Cost: $0 (no capital expenditures are required).

IV. Request for Comments

Comments are invited on: (a) Whether the proposed collection of information is necessary for the proper performance of the functions of the agency, including whether the information shall have practical utility; (b) the accuracy of the agency's estimate of the burden (including hours and cost) of the proposed collection of information; (c) ways to enhance the quality, utility, and clarity of the information to be collected; and (d) ways to minimize the burden of the collection of information on respondents, including through the use of automated collection techniques or other forms of information technology. Comments submitted in response to this notice will be summarized and/or included in the request for OMB approval of this information collection; they will also become a matter of public record.

Dated: February 22, 1999.

Linda Engelmeier,

Departmental Forms Clearance Officer, Office of Chief Information Officer.

[FR Doc. 99–5267 Filed 3–2–99; 8:45 am]

BILLING CODE 3510–33–P

DEPARTMENT OF COMMERCE

International Trade Administration

North American Free-Trade Agreement, Article 1904 NAFTA Panel Reviews; Request for Panel Review

AGENCY: NAFTA Secretariat, United States Section, International Trade Administration, Department of Commerce.

ACTION: Notice of First Request for Panel Review

SUMMARY: On February 9, 1999, Stelco, Inc. filed two First Requests for Panel Review with the U.S. Section of the NAFTA Secretariat pursuant to Article 1904 of the North American Free Trade Agreement. Panel reviews were requested of the final determination involving Certain Corrosion-Resistant Carbon Steel Flat Products from Canada and Certain Cut-to-Length Carbon Steel Plate from Canada. The determination affecting both products was published in the **Federal Register** on January 13, 1999 (64 Fed. Reg. 2173). The NAFTA Secretariat has assigned Case Number USA–CDA–99–1904–01 to the panel request involving Certain Corrosion-Resistant Carbon Steel Flat Products from Canada and USA–CDA–99–1904–02 to the panel request involving Certain Cut-to-Length Carbon Steel Plate from Canada.

FOR FURTHER INFORMATION CONTACT: James R. Holbein, United States Secretary, NAFTA Secretariat, Suite 2061, 14th and Constitution Avenue, Washington, D.C. 20230, (202) 482–5438.

SUPPLEMENTARY INFORMATION: Chapter 19 of the North American Free-Trade Agreement (''Agreement'') establishes a mechanism to replace domestic judicial review of final determinations in antidumping and countervailing duty cases involving imports from a NAFTA country with review by independent binational panels. When a Request for Panel Review is filed, a panel is established to act in place of national courts to review expeditiously the final determination to determine whether it conforms with the antidumping or countervailing duty law of the country that made the determination.

Under Article 1904 of the Agreement, which came into force on January 1, 1994, the Government of the United States, the Government of Canada and the Government of Mexico established *Rules of Procedure for Article 1904 Binational Panel Reviews* (''Rules''). These Rules were published in the **Federal Register** on February 23, 1994 (59 FR 8686).

Two first Requests for Panel Review were filed with the Canadian Section of the NAFTA Secretariat, pursuant to Article 1904 of the Agreement, on February 9, 1999, requesting panel review of the final determination described above.

The Rules provide that:

(a) a Party or interested person may challenge the final determination in whole or in part by filing a Complaint in accordance with Rule 39 within 30 days after the filing of the first Request for Panel Review (the deadline for filing a Complaint is March 11, 1999);

(b) a Party, investigating authority or interested person that does not file a Complaint but that intends to appear in support of any reviewable portion of the final determination may participate in the panel review by filing a Notice of Appearance in accordance with Rule 40 within 45 days after the filing of the first Request for Panel Review (the deadline for filing a Notice of Appearance is March 26, 1999); and

(c) the panel review shall be limited to the allegations of error of fact or law, including the jurisdiction of the investigating authority, that are set out in the Complaints filed in the panel review and the procedural and substantive defenses raised in the panel review.

Dated: February 16, 1999.

James R. Holbein,

United States Secretary, NAFTA Secretariat.

[FR Doc. 99–5143 Filed 3–2–99; 8:45 am]

BILLING CODE 3510–GT–P

DEPARTMENT OF COMMERCE

National Institute of Standards and Technology

Manufacturing Extension Partnership Program Evaluation Survey

ACTION: Proposed collection; comment request.

SUMMARY: The Department of Commerce, as part of its continuing effort to reduce paperwork and respondent burden, invites the general public and other Federal agencies to take this opportunity to comment on proposed and/or existing information collections, as required by the Paperwork Reduction Act of 1996, Public Law 104–13 (44 U.S. C. 3506(c)(2)(A).

DATES: Written comments must be submitted on or before May 3, 1999.

ADDRESSES: Direct all written comments to Linda Engelmeier, Departmental Clearance Officer, Department of Commerce, Room 5327, 14th and Constitution Avenue, NW, Washington, D.C. 20230. The Internet address is LEngel@doc.gov.

FOR FURTHER INFORMATION CONTACT: Requests for additional information or copies of the information collection instrument and instructions should be directed to: Elizabeth Bury, Manufacturing Extension Partnership, Building 301, Room C–100, National Institute of Standards and Technology, Stop 4800, Gaithersburg, Maryland 20899; phone: (301) 975–3944, and fax: (301) 926–3787.

SUPPLEMENTARY INFORMATION:

Abstract

This submission under the Paperwork Reduction Act represents a request for a revision to an existing collection by the Department of Commerce's National Institute of Standards and Technology. The revision being proposed is a pilot test of modifications to an existing, ongoing collection effort, the National Institute of Standards & Technology, Manufacturing Extension Partnership Program Evaluation Survey, OMB number 0693–0021.

The Manufacturing Extension Partnership is a nationwide system of services and support for smaller manufacturers giving them unprecedented access to new technologies, resources, and expertise. Sponsored by the National Institute of Standards and Technology, the MEP is comprised of a network of locally based manufacturing extension centers working with small manufacturers to help them improve their manufacturing competitiveness.

Obtaining specific information from clients about the impact of MEP services is essential for National Institute of Standards and Technology officials to evaluate program strengths and weaknesses and plan improvements in program effectiveness and efficiency. Recently, program managers completed a new strategic plan focusing greater attention on a more focused set of program goals and objectives. The new strategic plan has resulted in program managers desire to revisit the current data collection effort. The purpose of the revised collection will be to make it more compatible with the new strategic plan goals and to further examine areas for overall improvement in methodology.

The program wishes to pilot a new, revised data collection effort.

Method of Collection

The Survey will be administered using Computer Assisted Telephone Interviewing (CATI) technology.

Data

OMB Number: 0693–0021.

Form Number: N/A.

Type of Review: Regular submission.

Affected Public: Businesses or other for-profit organizations.

Estimated Number of Respondents: 600.

Estimated Total Annual Burden Hours: 100 hours.

Estimated Time Per Response: 10 minutes.

Estimated Annual Cost: There is no cost to respondents other than their time to respond to the survey.

IV. Requests for Comments

Comments are invited on: (a) Whether the proposed collection of information is necessary for the proper performance of the functions of the agency, including whether the information shall have practical utility; (b) the accuracy of the agency's estimate of the burden (including hours and cost) of the proposed collection of information; (c) ways to enhance the quality, utility, and clarity of the information to be collected; and (d) ways to minimize the burden of the collection of information on respondents, including through the use of automated collection techniques or other forms of information technology.

Comments submitted in response to this notice will be summarized and/or included in the request for OMB approval of this information collection; they will also be come a matter of public record.

Dated: February 22, 1999.

Linda Engelmeier,

Departmental Forms Clearance Officer, Office of Chief Information Officer.

[FR Doc. 99–5266 Filed 3–2–99; 8:45 am]

BILLING CODE: 3510–13–P

DEPARTMENT OF COMMERCE

National Oceanic and Atmospheric Administration

[I.D. 012099D]

Marine Mammals; File No. 259–1481–00 and File No. 633–1483–00

AGENCY: National Marine Fisheries Service (NMFS), National Oceanic and Atmospheric Administration (NOAA), Commerce.

ACTION: Issuance of permits.

SUMMARY: Notice is hereby given that Dr. Ronald J. Schusterman, Long Marine Laboratory, University of California Santa Cruz, 100 Shaffer Road, Santa Cruz, CA 95060, has been issued a permit to take two California sea lions (*Zalophus californianus*), one Pacific harbor seal (*Phoca vitulina*), and one northern elephant seal (*Mirounga angustirostris*) for purposes of scientific research.

Notice is also hereby given that the Center for Coastal Studies, P.O. Box 1036, Provincetown, MA 02657, has been issued a permit to take right whales (*Eubalaena glacialis*) for purposes of scientific research.

ADDRESSES: The permits and related documents are available for review upon written request or by appointment in the following office(s) for both 259–1481–00 and 633–1483–00:

Permits and Documentation Division, Office of Protected Resources, NMFS, 1315 East-West Highway, Room 13705, Silver Spring, MD 20910 (301/713–2289);

For 259–1481–00 only: Regional Administrator, Southwest Region, National Marine Fisheries Service, NOAA, 501 West Ocean Boulevard, Suite 4200, Long Beach, CA 90802–4213 (562/980–4001); and

For 633–1483–00 only: Regional Administrator, Northeast Region, National Marine Fisheries Service, NOAA, One Blackburn Drive, Gloucester, MA 01930–2298 (978/281–9250).

FOR FURTHER INFORMATION CONTACT: Sara Shapiro or Ruth Johnson, 301/713–2289.

SUPPLEMENTARY INFORMATION: On December 17, 1998, notice was published in the **Federal Register** (63 FR 69615) that a request for a scientific research permit to take two California sea lions (*Zalophus californianus*), one Pacific harbor seal (*Phoca vitulina*), and one northern elephant seal (*Mirounga angustirostris*) had been submitted by Dr. Schusterman. On December 21, 1998, notice was published in the Federal Register (63 FR 70395) that a

request for a scientific research permit to take Northern right whales (*Eubalaena glacialis*) had been submitted by the Center for Coastal Studies. The requested permits have been issued under the authority of the Marine Mammal Protection Act of 1972, as amended (16 U.S.C. 1361 *et seq.*), the Regulations Governing the Taking and Importing of Marine Mammals (50 CFR part 216), the Endangered Species Act of 1973, as amended (ESA; 16 U.S.C. 1531 *et seq.*), and the regulations governing the taking, importing, and exporting of endangered fish and wildlife (50 CFR parts 217–227).

Dated: February 24, 1999.

Ann D. Terbush,

Chief, Permits and Documentation Division, Office of Protected Resources, National Marine Fisheries Service.

[FR Doc. 99–5247 Filed 3–2–99; 8:45 am]

BILLING CODE 3510–22–F

DEPARTMENT OF COMMERCE

Patent and Trademark Office

Customer Input—Patent and Trademark Customer Surveys

ACTION: Proposed collection; comment request.

SUMMARY: The Department of Commerce (DOC), as part of its continuing effort to reduce paperwork and respondent burden, invites the general public and other Federal agencies to comment on the continuing and proposed information collection, as required by the Paperwork Reduction Act of 1995, Public Law 104–13 (44 U.S.C. 3506(c)(2)(A)).

DATES: Written comments must be submitted on or before May 3, 1999.

ADDRESSES: Direct all written comments to Linda Engelmeier, Departmental Forms Clearance Officer, Department of Commerce, Room 5327, 14th and Constitution Avenue, NW, Washington, DC 20230. Her Internet address is LEngel@doc.gov.

FOR FURTHER INFORMATION CONTACT: Requests for additional information should be directed to the attention of Greg Mullen, Senior Program Analyst, Center for Quality Services, Crystal Park 1—Suite 812, 2011 Crystal Drive, Arlington, VA 22202, by telephone at (703) 305–4207, by facsimile transmission to (703) 308–8002, or by e-mail to greg.mullen@uspto.gov.

SUPPLEMENTARY INFORMATION:

I. Abstract

This is a generic clearance for an undefined number of surveys that the Patent and Trademark Office (PTO) may conduct over the next three years. These surveys may be conducted in a variety of forms, such as telephone surveys, face-to-face interviews, mail surveys, questionnaires and customer surveys, comment cards, and focus groups. The PTO is currently investigating the feasibility of electronic surveys, in which case the PTO may quite possibly use the electronic medium to conduct customer surveys. A brief description of the expected methodology for the various survey vehicles is provided below.

For telephone surveys, the PTO calls the respondent and either surveys the respondent or schedules an appointment and faxes the survey questions to the respondent. In addition, a script is prepared for the actual telephone interview so that each telephone survey is conducted in the same manner. At this time, the PTO is unable to predict the number of telephone surveys that may be conducted. The PTO estimates that 400 responses will be received from telephone surveys, for an estimated burden of 100 hours.

For possible face-to-face interviews, the PTO uses a variety of delivery mechanisms to try to meet our customers needs. There are two public search rooms which members of the public use on a regular basis. A script is prepared so each respondent is asked the same questions. There may also be other occasional uses of face to face interviews to assess customer satisfaction. The PTO estimates that 200 responses will be received from face to face interviews, for an estimated burden of 50 hours.

The PTO also mails surveys to respondents with instructions to mail the completed surveys back to the PTO in the self-addressed and stamped envelope provided with the survey. In general, the PTO follows-up non-responses by mailing reminders and through phone contacts. At this time, the PTO is unable to predict the number of survey mailings that may be conducted. The PTO estimates that 3,500 responses will be received from survey mailings, for an estimated burden of 1,750 hours.

The PTO uses customer surveys and questionnaires to survey users of PTO's various services or to survey attendees at various conferences, among other items. The PTO provides survey forms which are either handed to the respondents by the staff or left for attendees to pick up as they enter or exit from various functions. If the completed surveys are not handed directly back to a staff member, the respondents are instructed to drop off their surveys or mail them back to the PTO. At this time, the PTO is unable to predict the number of customer surveys and questionnaires that may be conducted. The PTO estimates that 1,000 responses will be received from customer surveys and questionnaires, for an estimated burden of 83 hours.

Another survey instrument which the PTO frequently uses are customer comment cards. These comment cards are pre-paid and return addressed postage cards which the respondent can mail back to the PTO. At this time, the PTO is unable to predict the number of customer surveys and questionnaires that may be conducted. The PTO estimates that 2,000 responses will be received from customer surveys and questionnaires, for an estimated burden of 166 hours.

The PTO frequently uses focus groups as a survey instrument. The PTO asks groups of its customers to get together and discuss issues of mutual interest. Many times the results of these sessions are used to help make improvements to PTO operations or to recommend that certain issues be studied further. The PTO estimates that 100 responses will be received from focus groups, for an estimated burden of 200 hours.

These surveys are designed to obtain customer feedback regarding products, services, and related service standards of the PTO. At this time, the PTO is unable to state precisely which survey vehicles will be used during the renewal period. As the PTO's survey needs are determined, the PTO will submit the specific survey instrument for approval.

Electronic surveys are currently being researched for feasibility.

II. Method of collection

These surveys will be conducted by telephone and face-to-face interviews, mailings, customer surveys and questionnaires, comment cards, and focus groups. The PTO is also exploring the possibility of using the PTO Web site to conduct customer surveys. A random sample is used to collect the data. Statistical methods will be followed.

III. Data

OMB Number: 0651–0038.

Form Number: Depending on the individual situation, the PTO may have survey and questionnaire forms and comment cards. The PTO is exploring the feasibility of using electronic surveys, so this information collection may also include electronic forms in the future.

Type of Review: Revision of a currently approved collection.

Affected Public: Individuals or households, businesses or other for-profit, not-for-profit institutions, farms, state, local or tribal governments, and the Federal Government.

Estimated Number of Respondents: 7,200 responses per year.

Estimated Time Per Response: It is estimated to take approximately 15 minutes to complete telephone surveys, 15 minutes to complete face-to-face interviews, 30 minutes to complete mail surveys, five minutes to complete questionnaires and customer surveys, five minutes to complete comment cards, and 120 minutes to conduct a focus group.

Estimated Total Annual Respondent Burden Hours: 2,349 hours per year.

Estimated Total Annual Respondent Cost Burden: $0 (no expenditures are required). $325,923.75 per year is estimated for salary costs associated with respondents.

Title of form	Estimated time for response mins	Estimated annual burden hours	Estimated annual responses
Telephone Surveys	15	100	400
Face-to-face Interviews	15	50	200
Mail Surveys	30	1,750	3,500
Questionnaires and Customer Surveys	5	83	1,000
Comment Cards	5	166	2,000
Focus Groups	120	200	100
Totals		2,349	7,200

Note: The burden figures shown in the table above are estimates based on the types of surveys that the PTO may be using during the next three years. At this time, the PTO cannot predict which and how many surveys will be conducted. Depending on the number of surveys that the PTO actually conducts, it is possible that the burden hours could decrease from the totals shown in the table.

IV. Request for Comments

Comments are invited on: (a) whether the proposed collection of information is necessary for the proper performance of the functions of the agency, including whether the information shall have practical utility; (b) the accuracy of the agency's estimate of the burden (including hours and cost) of the proposed collection of information; (c) ways to enhance the quality, utility, and clarity of the information to be collected; and (d) ways to minimize the burden of the collection of information on respondents, e.g., the use of automated collection techniques or other forms of information technology.

Comments submitted in response to this notice will be summarized or included in the request for OMB approval of this information collection; they will also become a matter of public record.

Dated: February 22, 1999.

Linda Engelmeier,

Departmental Forms Clearance Officer, Office of the Chief Information Officer.

[FR Doc. 99–5265, Filed 3–2–99; 8:45 am]

BILLING CODE 3510–16–P

COMMITTEE FOR THE IMPLEMENTATION OF TEXTILE AGREEMENTS

Adjustment of Import Limits for Certain Cotton, Wool, Man-Made Fiber, Silk Blend and Other Vegetable Fiber Textiles and Textile Products Produced or Manufactured in Taiwan

February 25, 1999.

AGENCY: Committee for the Implementation of Textile Agreements (CITA).

ACTION: Issuing a directive to the Commissioner of Customs adjusting limits.

EFFECTIVE DATE: March 3, 1999.

FOR FURTHER INFORMATION CONTACT: Janet Heinzen, International Trade Specialist, Office of Textiles and Apparel, U.S. Department of Commerce, (202) 482–4212. For information on the quota status of these limits, refer to the Quota Status Reports posted on the bulletin boards of each Customs port, call (202) 927–5850, or refer to the U.S. Customs website at http://www.customs.ustreas.gov. For information on embargoes and quota re-openings, call (202) 482–3715.

SUPPLEMENTARY INFORMATION:

Authority: Section 204 of the Agricultural Act of 1956, as amended (7 U.S.C. 1854); Executive Order 11651 of March 3, 1972, as amended.

The current limits for Groups I and II are being adjusted for special shift.

A description of the textile and apparel categories in terms of HTS numbers is available in the CORRELATION: Textile and Apparel Categories with the Harmonized Tariff Schedule of the United States (see **Federal Register** notice 63 FR 71096, published on December 23, 1998). Also see 63 FR 69057, published on December 15, 1998.

Troy H. Cribb,

Chairman, Committee for the Implementation of Textile Agreements.

Committee for the Implementation of Textile Agreements

February 25, 1999.

Commissioner of Customs,

Department of the Treasury, Washington, DC 20229.

Dear Commissioner: This directive amends, but does not cancel, the directive issued to you on December 8, 1998, by the Chairman, Committee for the Implementation of Textile Agreements. That directive concerns imports of certain cotton, wool, man-made fiber, silk blend and other vegetable fiber textiles and textile products, produced or manufactured in Taiwan and exported during the twelve-month period beginning on January 1, 1999 and extending through December 31, 1999.

Effective on March 3, 1999, you are directed to adjust the current limits for the following categories, as provided for under the terms of the current bilateral textile agreement:

Category	Adjusted twelve-month limit [1]
Group I 200–224, 225/317/326, 226, 227, 229, 300/301/607, 313–315, 360–363, 369–L/670–L/870 [2], 369–S [3], 369–O [4], 400–414, 464–469, 600–606, 611, 613/614/615/617, 618, 619/620, 621–624, 625/626/627/628/629, 665, 666, 669–P [5], 669–T [6], 669–O [7], 670–H [8] and 670–O [9], as a group.	588,780,670 square meters equivalent.
Group II 237, 239, 330–332, 333/334/335, 336, 338/339, 340–345, 347/348, 349, 350/650, 351, 352/652, 353, 354, 359–C/659–C [10], 359–H/659–H [11], 359–O [12], 431–444, 445/446, 447/448, 459, 630–632, 633/634/635, 636, 638/639, 640, 641–644, 645/646, 647/648, 649, 651, 653, 654, 659–S [13], 659–O [14], 831–844, and 846–859, as a group.	745,000,000 square meters equivalent.

[1] The limits have not been adjusted to account for any imports exported after December 31, 1998.

[2] Category 870; Category 369–L: only HTS numbers 4202.12.4000, 4202.12.8020, 4202.12.8060, 4202.92.1500, 4202.92.3016, 4202.92.6091 and 6307.90.9905; Category 670–L: only HTS numbers 4202.12.8030, 4202.12.8070, 4202.92.3020, 4202.92.3031, 4202.92.9026 and 6307.90.9907.

[3] Category 369–S: only HTS number 6307.10.2005.

[4] Category 369–O: all HTS numbers except 4202.12.4000, 4202.12.8020, 4202.12.8060, 4202.92.1500, 4202.92.3016, 4202.92.6091, 6307.90.9905 (Category 369–L); and 6307.10.2005 (Category 369–S).

[5] Category 669–P: only HTS numbers 6305.32.0010, 6305.32.0020, 6305.33.0010, 6305.33.0020 and 6305.39.0000.

[6] Category 669–T: only HTS numbers 6306.12.0000, 6306.19.0010 and 6306.22.9030.

[7] Category 669–O: all HTS numbers except 6305.32.0010, 6305.32.0020, 6305.33.0010, 6305.33.0020, 6305.39.0000 (Category 669–P); 6306.12.0000, 6306.19.0010 and 6306.22.9030 (Category 669–T).

[8] Category 670–H: only HTS numbers 4202.22.4030 and 4202.22.8050.

[9] Category 670–O: all HTS numbers except 4202.22.4030, 4202.22.8050 (Category 670–H); 4202.12.8030, 4202.12.8070, 4202.92.3020, 4202.92.3031, 4202.92.9026 and 6307.90.9907 (Category 670–L).

[10] Category 359–C: only HTS numbers 6103.42.2025, 6103.49.8034, 6104.62.1020, 6104.69.8010, 6114.20.0048, 6114.20.0052, 6203.42.2010, 6203.42.2090, 6204.62.2010, 6211.32.0010, 6211.32.0025 and 6211.42.0010 ; Category 659–C: only HTS numbers 6103.23.0055, 6103.43.2020, 6103.43.2025, 6103.49.2000, 6103.49.8038, 6104.63.1020, 6104.63.1030, 6104.69.1000, 6104.69.8014, 6114.30.3044, 6114.30.3054, 6203.43.2010, 6203.43.2090, 6203.49.1010, 6203.49.1090, 6204.63.1510, 6204.69.1010, 6210.10.9010, 6211.33.0010, 6211.33.0017 and 6211.43.0010.

[11] Category 359–H: only HTS numbers 6505.90.1540 and 6505.90.2060; Category 659–H: only HTS numbers 6502.00.9030, 6504.00.9015, 6504.00.9060, 6505.90.5090, 6505.90.6090, 6505.90.7090 and 6505.90.8090.

[12] Category 359–O: all HTS numbers except 6103.42.2025, 6103.49.8034, 6104.62.1020, 6104.69.8010, 6114.20.0048, 6114.20.0052, 6203.42.2010, 6203.42.2090, 6204.62.2010, 6211.32.0010, 6211.32.0025, 6211.42.0010 (Category 359–C); 6505.90.1540 and 6505.90.2060 (Category 359–H).

[13] Category 659–S: only HTS numbers 6112.31.0010, 6112.31.0020, 6112.41.0010, 6112.41.0020, 6112.41.0030, 6112.41.0040, 6211.11.1010, 6211.11.1020, 6211.12.1010 and 6211.12.1020.

[14] Category 659–O: all HTS numbers except 6103.23.0055, 6103.43.2020, 6103.43.2025, 6103.49.2000, 6103.49.8038, 6104.63.1020, 6104.63.1030, 6104.69.1000, 6104.69.8014, 6114.30.3044, 6114.30.3054, 6203.43.2010, 6203.43.2090, 6203.49.1010, 6203.49.1090, 6204.63.1510, 6204.69.1010, 6210.10.9010, 6211.33.0010, 6211.33.0017, 6211.43.0010 (Category 659–C); 6502.00.9030, 6504.00.9015, 6504.00.9060, 6505.90.5090, 6505.90.6090, 6505.90.7090, 6505.90.8090 (Category 659–H); 6112.31.0010, 6112.31.0020, 6112.41.0010, 6112.41.0020, 6112.41.0030, 6112.41.0040, 6211.11.1010, 6211.11.1020, 6211.12.1010 and 6211.12.1020 (Category 659–S).

The Committee for the Implementation of Textile Agreements has determined that these actions fall within the foreign affairs exception of the rulemaking provisions of 5 U.S.C. 553(a)(1).

Sincerely,

Troy H. Cribb,

Chairman, Committee for the Implementation of Textile Agreements.

[FR Doc. 99–5270 Filed 3–2–99; 8:45 am]

BILLING CODE 3510–DR–F

DEPARTMENT OF DEFENSE

Department of the Air Force

HQ USAF Scientific Advisory Board Meeting

The Deployment and Sustainment Panel will meet at ANSER Conference Center in Arlington, VA on March 10–11, 1999 from 8:00 a.m. to 5:00 p.m.

The purpose of the meeting is to gather information and receive briefings in support of the USAF Scientific Advisory Board's 1999 Summer Study.

The meeting will be closed to the public in accordance with Section 552b (c) of Title 5, United States Code, specifically subparagraphs (1) and (4) thereof.

For further information, contact the HQ USAF Scientific Advisory Board Secretariat at (703) 697–8404.

Carolyn A. Lunsford,

Air Force Federal Register Liaison Officer.

[FR Doc. 99–5145 Filed 3–2–99; 8:45 am]

BILLING CODE 5001–05–U

DEPARTMENT OF DEFENSE

Department of the Air Force

HQ USAF Scientific Advisory Board Meeting

The 1999 Ad Hoc Study on COTS will meet at Colorado Springs, CO on March 23, 1999 from 8:00 a.m. to 5:00 p.m.

The purpose of the meeting is to kick off the 1999 Ad Hoc Study COTS. The meeting will be closed to the public in accordance with Section 552b (c) of Title 5, United States Code, specifically subparagraphs (1) and (4) thereof.

For further information, contact the HQ USAF Scientific Advisory Board Secretariat at (703) 697–8404.

Carolyn A. Lunsford,

Air Force Federal Register Liaison Officer.

[FR Doc. 99–5146 Filed 3–2–99; 8:45 am]

BILLING CODE 5001–05–U

DEPARTMENT OF DEFENSE

Department of the Air Force

HQ USAF Scientific Advisory Board Meeting

The Non-Lethal/Lethal Panel will meet at ANSER Conference Center in Arlington, VA on March 16–17, 1999 from 8:00 a.m. to 5:00 p.m.

The purpose of the meeting is to gather information and receive briefings in support of the USAF Scientific Advisory Board's 1999 Summer Study.

The meeting will be closed to the public in accordance with Section 552b (c) of Title 5, United States Code, specifically subparagraphs (1) and (4) thereof.

For further information, contact the HQ USAF Scientific Advisory Board Secretariat at (703) 697–8404.

Carolyn A. Lunsford,

Air Force Federal Register Liaison Officer.

[FR Doc. 99–5147 Filed 3–2–99; 8:45 am]

BILLING CODE 5001–05–U

DEPARTMENT OF DEFENSE

Department of the Navy

Notice of Availability of Invention for Licensing; Government-Owned Invention

AGENCY: Department of the Navy, DoD.

ACTION: Notice.

SUMMARY: The invention listed below is assigned to the United States Government as represented by the Secretary of the Navy and is available for licensing by the Department of the Navy.

Provisional Application No. 60/107,038 entitled ''Hyperspectral Visualization Extensible workbench'' Navy Case No. 79,087.

Requests for copies of the patent application cited should be directed to the Naval Research Laboratory, code 3008.2, 4555 Overlook Avenue, SW, Washington, DC 20375–5320, and must include the Navy Case number.

FOR FURTHER INFORMATION CONTACT: Dr. Richard H. Rein, Head, Technology Transfer Office, NRL Code 1004, 4555 Overlook Avenue, SW, Washington, DC 20375–5320, telephone (202) 767–7230.

(Authority: 35 U.S.C. 207, 37 CFR Part 404)

Dated: February 19, 1999.

Pamela A. Holden,

Lieutenant Commander, Judge Advocate General's Corps, U.S. Navy, Federal Register Liaison Officer.

[FR Doc. 99–5230 Filed 3–2–99; 8:45 am]

BILLING CODE 3810–FF–P

DEPARTMENT OF DEFENSE

Department of the Navy

Notice of Availability of Invention for Licensing; Government-Owned Invention

AGENCY: Department of the Navy, DoD.

ACTION: Notice.

SUMMARY: The invention listed below is assigned to the United States Government as represented by the Secretary of the Navy and is available for licensing by the Department of the Navy.

U.S. Patent Application Serial No. 08/655,788 entitled ''Collagen Thin Films and Method of Producing Same'' Navy Case No. 77,227.

Requests for copies of the patent application cited should be directed to the Naval Research Laboratory, code 3008.2, 4555 Overlook Avenue, SW, Washington, DC 20375–5320, and must include the Navy Case number.

FOR FURTHER INFORMATION CONTACT: Dr. Richard H. Rein, Head, Technology Transfer Office, NRL Code 1004, 4555 Overlook Avenue, SW, Washington, DC 20375–5320, telephone (202) 767–7230.

(Authority: 35 U.S.C. 207, 37 CFR Part 404)

Dated: February 19, 1999.

Pamela A. Holden,

Lieutenant Commander, Judge Advocate General's Corps, U.S. Navy, Federal Register Liaison Officer.

[FR Doc. 99–5229 Filed 3–2–99; 8:45 am]

BILLING CODE 3810–FF–P

DEPARTMENT OF DEFENSE

Department of the Navy

Meeting of the Naval Research Advisory Committee

AGENCY: Department of the Navy, DoD.

ACTION: Notice.

SUMMARY: The Naval Research Advisory Committee (NRAC) Panel on Global Positioning System (GPS) Vulnerability and Alternatives will meet to examine the vulnerabilities of the GPS on Navy and Marine Corps platforms and weapons systems.

All sessions of the meeting will be devoted to executive sessions that will include discussions and technical examination of information related to GPS vulnerabilities; the Department of the Navy's mitigation plans for platforms, weapons, communications, and intelligence systems as related to the projected threat; GPS modernization; and research, development, test, acquisition, and training activities to improve GPS-related military readiness and precision navigation capabilities. All sessions of the meeting will be closed to the public.

DATES: The meeting will be held on Tuesday, March 9, 1999, from 8 a.m. to 5 p.m.; and Wednesday, March 10, 1999, from 8 a.m. to 12 p.m.

ADDRESSES: The meeting will be held at the Office of Naval Research, 800 North Quincy Street, Arlington, Virginia.

FOR FURTHER INFORMATION CONTACT: Diane Mason-Muir, Program Director, Naval Research Advisory Committee, 800 North Quincy Street, Arlington, VA 22217–5660, telephone number: (703) 696–6769.

SUPPLEMENTARY INFORMATION: This notice of meeting is provided in accordance with the provisions of the Federal Advisory Committee Act (5 U.S.C. App. 2). All sessions of the meeting will be devoted to discussions involving technical examination of information related to vulnerabilities and deficiencies of the GPS on Navy and Marine Corps platforms and weapons systems. These discussions will contain classified information that is specifically authorized under criteria established by Executive Order to be kept secret in the interest of national defense and are in fact properly classified pursuant to such Executive Order. The classified and non-classified matters to be discussed are so inextricably intertwined as to preclude opening any portion of the meeting. In accordance with 5 U.S.C. App. 2, section 10(d), the Under Secretary of the Navy has determined in writing that the public interest requires that all sessions of the meeting be closed to the public because they will be concerned with matters listed in 5 U.S.C. section 552b(c)(1).

Dated: February 19, 1999.

Pamela A. Holden,

Lieutenant Commander, Judge Advocate General's Corps, U.S. Navy, Federal Register Liaison Officer.

[FR Doc. 99–5228 Filed 3–2–99; 8:45 am]

BILLING CODE 3810–FF–P

DELAWARE RIVER BASIN COMMISSION

Notice of Commission Meetings and Public Hearings

Notice is hereby given that the Delaware River Basin Commission will hold a series of meetings and public hearings on March 8 and 9, 1999. Each will be open to the public and held in the Hearing Room of the Pennsylvania Department of Environmental Protection's Southeastern Regional Office at 555 E. North Lane, Lee Park Suite 6010, Conshohocken, Pennsylvania.

On March 8, 1999, the Commission will hold a panel discussion focusing on perspectives on integrated resources planning. The panel, scheduled from 1:30 p.m. to 4 p.m., will address the relationships among watershed management, land use planning and ground water resources.

On March 9, 1999, an informal conference among the Commissioners and staff will be held at 9:30 a.m. and will include discussions of a proposed Commission-Corps of Engineers drought storage agreement; a proposed fisheries protection bank drought operations plan; and the Commission's Directions planning process workshops.

At 11 a.m., the Commission will hold a public hearing as part of its regular business meeting. In addition to the subjects summarized below which are scheduled for public hearing at the

business meeting, the Commission will also address the following: Minutes of the January 27, 1999 Commission business meeting; announcements; report on Basin hydrologic conditions; reports by the Executive Director and General Counsel; status of compliance of Somerton Springs Golf Development; consideration of a resolution to authorize funding of the remainder of Task 1, Phase I of the Flow Needs Study of the Delaware Estuary; and public dialogue.

The subjects of the hearing will be as follows:

Applications for Approval of the Following Projects Pursuant to Article 10.3, Article 11 and/or Section 3.8 of the Compact:

1. *Department of the Army-Tobyhanna Army Depot D–87–57 CP RENEWAL.* An application for the renewal of a ground water withdrawal project to supply up to 20 million gallons (mg)/30 days of water to the applicant's distribution system from Well Nos. 1, 2, 3, 4, 5 and 6. Commission approval on January 25, 1989 was extended to 10 years. The total withdrawal from all wells will remain limited to 20 mg/30 days. The project is located in Coolbaugh Township, Monroe County, Pennsylvania.

2. *Nesquehoning Borough Authority D–94–47 CP.* An application for approval of a ground water withdrawal project to supply up to 21.6 mg/30 days of water to the applicant's distribution system from new Well Nos. 1, 4 and 5, existing Well Nos. 2 and 3, and to limit the withdrawal from all wells to 21.6 mg/30 days. The project is located in Nesquehoning Borough, Carbon County, Pennsylvania.

3. *Pennsylvania-American Water Company D–98–16 CP.* An application for approval of a ground water withdrawal project to supply up to 21.6 mg/30 days of water from new Coolbaugh Well No. 1 to the applicant's Pocono System, a regional water system being formed by the acquisition of a number of water utilities, and to limit the withdrawal from all wells to 30 mg/30 days. The project is located in Coolbaugh Township, Monroe County, Pennsylvania.

Documents relating to these items may be examined at the Commission's offices. Preliminary dockets are available in single copies upon request. Please contact Thomas L. Brand at (609) 883–9500 ext. 221 concerning docket-related questions. Persons wishing to testify at this hearing are requested to register with the Secretary at (609) 883–9500 ext. 203 prior to the hearing.

Other Scheduled Hearings

By earlier notice, the Commission announced its schedule of public hearings on proposed amendments to its Ground Water Protected Area Regulations for Southeastern Pennsylvania concerning the establishment of numerical ground water withdrawal limits for 62 subbasins which are entirely or partially within the Ground Water Protected Area. Limits, based upon baseflow frequency analyses, were initially specified for the 14 subbasins in the Neshaminy Creek Basin. Limits for the remaining 62 subbasins are based upon additional baseflow frequency analyses provided by the United States Geological Survey in 1998.

The public hearings are scheduled as follows:

March 9, 1999 beginning at 1 p.m. and continuing until 5 p.m., as long as there are people present wishing to testify. The hearing will resume at 7 p.m. and continue until 9 p.m., as long as there are people present wishing to testify.

Copies of the full text of the proposed amendments as well as the Commission's Ground Water Protected Area Regulations for Southeastern Pennsylvania may be obtained by contacting Susan M. Weisman, Commission Secretary, at (609) 883–9500 ext. 203.

Persons wishing to testify are requested to notify the Secretary in advance. Written comments on the proposed amendments should be submitted to the Secretary at the Delaware River Basin Commission, P.O. Box 7360, West Trenton, New Jersey 08628.

Dated: February 23, 1999.

Susan M. Weisman,

Secretary.

[FR Doc. 99–5222 Filed 3–2–99; 8:45 am]

BILLING CODE 6360–01–P

DEPARTMENT OF EDUCATION

Submission for OMB Review; Comment Request

AGENCY: Department of Education.

SUMMARY: The Acting Leader, Information Management Group, Office of the Chief Information Officer invites comments on the submission for OMB review as required by the Paperwork Reduction Act of 1995.

DATES: Interested persons are invited to submit comments on or before April 2, 1999.

ADDRESSES: Written comments should be addressed to the Office of Information and Regulatory Affairs, Attention: Danny Werfel, Desk Officer, Department of Education, Office of Management and Budget, 725 17th Street, N.W., Room 10235, New Executive Office Building, Washington, D.C. 20503 or should be electronically mailed to the internet address DWERFEL@OMB.EOP.GOV. Requests for copies of the proposed information collection requests should be addressed to Patrick J. Sherrill, Department of Education, 400 Maryland Avenue, S.W., Room 5624, Regional Office Building 3, Washington, D.C. 20202–4651, or should be electronically mailed to the internet address *Pat Sherrill@ed.gov*, or should be faxed to 202–708–9346.

FOR FURTHER INFORMATION CONTACT: Patrick J. Sherrill (202) 708–8196. Individuals who use a telecommunications device for the deaf (TDD) may call the Federal Information Relay Service (FIRS) at 1–800–877–8339 between 8 a.m. and 8 p.m., Eastern time, Monday through Friday.

SUPPLEMENTARY INFORMATION: Section 3506 of the Paperwork Reduction Act of 1995 (44 U.S.C. Chapter 35) requires that the Office of Management and Budget (OMB) provide interested Federal agencies and the public an early opportunity to comment on information collection requests. OMB may amend or waive the requirement for public consultation to the extent that public participation in the approval process would defeat the purpose of the information collection, violate State or Federal law, or substantially interfere with any agency's ability to perform its statutory obligations. The Acting Leader, Information Management Group, Office of the Chief Information Officer, publishes that notice containing proposed information collection requests prior to submission of these requests to OMB. Each proposed information collection, grouped by office, contains the following: (1) Type of review requested, e.g. new, revision, extension, existing or reinstatement; (2) Title; (3) Summary of the collection; (4) Description of the need for, and proposed use of, the information; (5) Respondents and frequency of collection; and (6) Reporting and/or Recordkeeping burden. OMB invites public comment at the address specified above. Copies of the requests are available from Patrick J. Sherrill at the address specified above.

Dated: February 25, 1999.

William E. Burrow,

Acting Leader, Information Management Group, Office of the Chief Information Officer.

Office of the Under Secretary

Type of Review: New.

Title: Evaluation of the Eisenhower Professional Development Program: State and Local Activities.

Frequency: One time.

Affected Public: State, local or Tribal Gov't, SEAs or LEAs.

Reporting and Recordkeeping Hour Burden:

Responses: 575.

Burden Hours: 793.

Abstract: The Planning and Evaluation Service is conducting a three-year study to evaluate the Eisenhower Professional Development Program and to report on the progress of the program with respect to a set of Performance Indicators established by the Department of Education. The evaluation will provide information on the types of professional development activities supported by the program, the effects of the program participation on classroom teaching, and the quality of program planning and coordination. Clearance is sought for the Longitudinal Study of Teacher Changes, to be conducted in the Spring of the 1998–1999 school year. Respondents will be teachers.

[FR Doc. 99–5163 Filed 3–2–99; 8:45 am]

BILLING CODE 4000–01–P

DEPARTMENT OF EDUCATION

National Advisory Council on Indian Education, Meeting

AGENCY: National Advisory Council on Indian Education, ED.

ACTION: Notice of open meeting.

SUMMARY: This notice sets forth the schedule and proposed agenda of a forthcoming meeting of the National Advisory Council on Indian Education. The purposes of this meeting are to discuss the Presidential Executive Order 13096 on American Indian and Alaska Native Education, and to discuss the reauthorization of programs under the Elementary and Secondary Education Act of 1965 (ESEA), of which the Title IX Indian Education Program is included. Notice of this meeting is required under section 10(a)(2) of the Federal Advisory Committee Act and is intended to notify the public of their opportunity to attend.

DATES AND TIMES: March 28, 1999, 9 a.m.–12 p.m. and March 29, 1999, 9 a.m.–4:30 p.m.

ADDRESSES: Holiday Inn on The Hill, New Jersey Avenue, Washington, DC (202) 638–1616.

FOR FURTHER INFORMATION CONTACT: Dr. David Beaulieu, Director, Office of Indian Education, 400 Maryland Avenue, SW, Washington, DC 20202. Telephone: (202) 260–3774; Fax: (202) 260–7779.

SUPPLEMENTARY INFORMATION: The National Advisory Council on Indian Education is a presidential appointed advisory council on Indian education established under section 9151 of Title IX of the Elementary and Secondary Education Act of 1965, as amended, (20 U.S.C. 7871). The Council advises the Secretary of Education and the Congress on funding and administration of programs with respect to which the Secretary has jurisdiction and that includes Indian children and adults as participants from which they benefit. The Council also makes recommendations to the Secretary for filling the position of Director of Indian Education whenever a vacancy occurs. The meeting of the Council is open to the public without advanced registration. Public attendance may be limited to the space available. Members of the public may make statements during the meeting, to the extent time permits, and file written statements with the Council for its consideration. Written statements should be submitted to the address listed above.

A summary of the proceedings and related matters which are informative to the public consistent with the policy of Title 5 U.S.C. 552b will be available to the public within fourteen days of the meeting, and are available for public inspection at the Office of Elementary and Secondary Education, U.S. Department of Education, 400 Maryland Avenue, SW, Washington, DC 20202 from the hours of 8:30 a.m. to 5 p.m.

Dated: February 23, 1998.

Judith Johnson,

Acting Assistant Secretary, Office of Elementary and Secondary Education.

The National Advisor Council on Indian Education, March 28–28, 1999

Holiday Inn on The Hill, New Jersey Avenue, Washington, DC, 202–638–1616.

Sunday, March 28, 1999

9:00 a.m.
- Roll Call
- Review Agenda and Purpose of Meeting

9:30–12:00
- Presidential Executive Order 13096 on American Indian and Alaska Native Education
- ESEA Reauthorization
- Draft NACIE Charter and Work Plan
- Annual Report Review
- OIE Updates

Monday, March 29, 1999

9:00 a.m.
- Call to Order
- Review of Meeting

10:00–12:00
- Open Meeting on: Reauthorization Executive Order 13906

12:00–1:00
- Lunch

1:00–3:00
- Open Meeting on: Reauthorization Executive Order 13906

3:00–4:30
- Reviw of Meeting

4:30 p.m.
- Adjourn NACIE Meeting

[FR Doc. 99–5213 Filed 3–2–99; 8:45 am]

BILLING CODE 4000–01–M

DEPARTMENT OF ENERGY

Office of Science Financial Assistance Program Notice 99–15; Natural and Accelerated Bioremediation Research Program (NABIR)

AGENCY: U.S. Department of Energy (DOE).

ACTION: Notice inviting grant applications.

SUMMARY: The Office of Biological and Environmental Research (OBER) of the Office of Science (SC), U.S. Department of Energy (DOE), hereby announces its interest in receiving applications for research grants in the Natural and Accelerated Bioremediation Research (NABIR) Program. Grant applications are being solicited for the Biomolecular Science and Engineering research element.

DATES: Applicants are strongly encouraged to submit a brief preapplication, containing a title, a list of investigators, and a summary (not to exceed one typed page) of proposed research. All preapplications, referencing Program Notice 99–15, must be received by DOE by 4:30 P.M., E.S.T., March 26, 1999. A response encouraging or discouraging a formal application generally will be communicated within 7 days of receipt.

The deadline for receipt of formal applications is 4:30 P.M., E.D.T., May 4, 1999, to be accepted for merit review and to permit timely consideration for award in Fiscal Year 1999.

ADDRESSES: Preapplications referencing Program Notice 99–15, should be sent by E-mail to daniel.drell@science.doe.gov.

Preapplications will also be accepted if mailed to the following address: Ms. Joanne Corcoran, Office of Biological and Environmental Research, SC–72, U.S. Department of Energy, 19901 Germantown Road, Germantown, MD 20874–1290.

Formal applications, referencing Program Notice 99–15, must be sent to: U.S. Department of Energy, Office of Science, Grants and Contracts Division, SC–64, 19901 Germantown Road, Germantown, MD 20874–1290, ATTN: Program Notice 99–15. This address must also be used when submitting applications by U.S. Postal Service Express Mail or any other commercial overnight delivery service, or when hand-carried by the applicant.

FOR FURTHER INFORMATION CONTACT: Dr. Daniel Drell, Life Sciences Division, SC-72, Office of Biological and Environmental Research, Office of Science, U.S. Department of Energy, 19901 Germantown Road, Germantown, MD 20874–1290, telephone: (301) 903–6488, E-mail: daniel.drell@science.doe.gov, fax: (301) 903–8521. The full text of Program Notice 99-15 is available via the Internet using the following web site address: http://www.er.doe.gov/production/grants/grants.html.

SUPPLEMENTARY INFORMATION: The mission of the NABIR Program is to provide the scientific understanding needed to use natural in situ processes and to develop new methods to accelerate those processes for bioremediation at DOE facilities. The NABIR program is initially emphasizing the bioremediation of metals and radionuclides in the subsurface below the root zone, including both thick vadose and saturated zones. The program is implemented through seven interrelated scientific research elements (Acceleration; Assessment; Biogeochemical Dynamics; Biomolecular Sciences and Engineering; Biotransformation and Biodegradation; Community Dynamics and Microbial Ecology; and System Engineering, Integration, Prediction, and Optimization); and a social and legal element called Bioremediation and its Social Implications and Concerns (BASIC). Additional information about NABIR, such as references to infrastructure that are available to the research community, can be accessed from the NABIR Homepage: http://www.lbl.gov/NABIR/. Abstracts of currently funded projects are available via the Internet using the following web site address: http://www.lbl.gov/NABIR/awardees.html.

Each scientific research element is directed by a program manager from OBER, who is responsible for providing support and overall direction for the element, including determining the relevance of the proposed research to the goals and objectives of the program element to the NABIR and other DOE programs. The NABIR program also has Science Team Leaders, selected through an earlier peer review process, who provide scientific leadership and coordination to the community of NABIR investigators. Information on the current Science Team Leaders and DOE program staff is available via the Internet using the following web site address: http://www.lbl.gov/NABIR/research__5.html.

Program Focus

The NABIR Program supports fundamental, hypothesis-driven research directed at specific topics that will provide the understanding necessary to develop effective new bioremediation technologies for DOE site cleanup. This research will help determine the future viability of bioremediation technologies at the DOE sites. The NABIR Program will not support research to evaluate risks to humans associated with the implementation or deployment of specific bioremediation technologies. Although the program is directed at specific goals, it supports research that is more fundamental in nature than demonstration projects.

The initial emphasis of the NABIR Program is on field-related research and metal and radionuclide contamination, specifically on the metals and radionuclides associated with past weapons production activities. However, the research program will support laboratory, theoretical, modeling, and other non-field research projects, if they fill important gaps that would be necessary to complete understanding for field-scale studies. The study of real problems might iterate between, for example, the laboratory and the field. Investigators without access to laboratories licensed to work with radionuclides may propose research with non-radioactive surrogates of radionuclides, or collaborate with a licensed laboratory. Typically, the bioremediation of metals and radionuclides involves, but is not limited to, mobilization and immobilization scenarios. Consideration of organic contaminants, such as solvents and complexing agents that would be important substrates, facilitators, inhibitors, or sources of carbon or electron donors or acceptors, can be included in the proposed research to the extent that they influence the primary goal of understanding the remediation of metals and radionuclides. Applicants are encouraged to review Chemical Contaminants on DOE Lands, DOE/ER–0547T, available at the OBER Homepage: http://www.er.doe.gov/production/ober/EPR/contam.pdf, for a compilation of wastes and waste mixtures at the DOE sites.

NABIR is a research program designed to serve as a foundation for microbial in situ bioremediation techniques. Although ''spillover'' benefits of the research to other cleanup needs such as the use of bioreactors to process waste streams are anticipated, NABIR emphasizes investigations into bioremediation of subsurface waste sites and their by-products released to the environment. This emphasis includes research that will assist the application of in situ bioremediation in conjunction with other cleanup methods, for example, using bioremediation to mobilize radionuclides so that pump-and-treat techniques could be more effective. Problems characterized by large areas with low-concentration contamination are emphasized over problems of localized, high concentration contamination. Research on phytoremediation will not be supported during this funding period.

In research plans that involve the potential release of chemicals, enzymes, and/or microorganisms to the field (both at contaminated and non-contaminated control sites), applicants must discuss how they will involve the public or stakeholders in their research, beginning with experimental design through completion of the project. All applicants should discuss other relevant societal issues, where appropriate, which may include intellectual property protection, and communication with and outreach to affected communities (including members of affected minority communities where appropriate) to explain the proposed research.

NABIR Infrastructure

The NABIR program proposes to select at least one Field Research Center (FRC) located at a DOE site. The FRC would serve as a central facility for researchers to use at their option. However, FRCs would not be identified for at least 6 months from the date of this solicitation and until National Environmental Policy Act (NEPA) review of the NABIR Program is complete. Applicants may use any available contaminated or uncontaminated field site that is presently available to them, including but not limited to DOE sites. However,

investigators are encouraged to consult the listing of current FRC-related field research sites and facilities available to NABIR investigators on the NABIR Homepage, at http://www.lbl.gov/NABIR/research__6.html. Investigators should describe how their research will interface with or transfer to field-scale research at the site they are using, to FRC-related sites, or to the FRC site that might be available in the future. A centrally maintained database will be developed to provide limited information, such as site characterization and kinetics data that will be needed by a broad segment of investigators. When appropriate, applications must include a short discussion of the Quality Assurance and Quality Control (QA/QC) measures that will be applied in data gathering and analysis activities. Successful applicants will be expected to coordinate their QA/QC protocols with NABIR program personnel. A draft of guidelines to be used by Natural and Accelerated Bioremediation Research (NABIR) program investigators in managing their information and data can be found on the NABIR Homepage: http://www.lbl.gov/NABIR/data-guide.html.

Scientific Research Elements

The following section describes the NABIR scientific research element that is emphasized in this Notice, the Biomolecular Science and Engineering element. Applicants may propose research that transcends this research element, but proposed research should be firmly rooted in Biomolecular Science and Engineering. For example, applicants may propose research on metals that may be of interest to the mining and chemical industries. Ongoing (previously funded) activities in this element can be viewed at: http://www.lbl.gov/NABIR/elem3.html and prospective applicants are strongly encouraged to review already funded research in this element to avoid duplication.

The overall goal of studies within this element is to further understanding of bioremediation using molecular and structural biology, particularly knowledge and approaches emerging from both human and especially microbial genome sequencing projects. The long-term goal is to develop improved cellular pathways and organisms capable of exploiting microbial capacities to further bioremediate metals and radionuclides found at DOE waste sites. To this end, and using where appropriate data and information from other program elements, studies under the Biomolecular Science and Engineering element should identify the genes, genetic systems, molecules, and pathways most effective for biotransforming metals and radionuclides. These studies can include (but are not limited to): (1) identifying, cloning, and sequencing novel genes and promoters important to the bioremediation of metals and radionuclides; and (2) the construction or enhancement of bioremedial enzymatic pathways by identifying active genes from different microbial organisms and inserting those genes into one or more organisms that are able to survive and compete effectively in environments contaminated with metals and/or radionuclides.

Research is encouraged in this notice that includes:

(1) Environmental regulation of the expression of genes, genetic systems, and key proteins involved in the sequestration, biotransformation, or mobilization, or immobilization of metals and radionuclides;

(2) The occurrence, the rates, the regulation, and the significance of natural exchanges of genetic material between microorganisms comprising consortia that are involved in bioremediation of metals and radionuclides;

(3) New methods for genetic analysis of naturally occurring microbes and microbial communities that are involved in bioremediation, including methods for diversity sampling and characterizing subtle genetic differences between consortial species.

Program Funding

It is anticipated that up to $750,000 will be available for multiple awards to be made in FY 1999 in the category described above. Applications may request project support up to three years, with out-year support contingent on the availability of funds, progress of the research, and programmatic needs. Annual budgets for research projects are expected to range from $150,000 to $300,000 total costs. Researchers are encouraged to team with investigators already funded in this element, or in other disciplines where appropriate. DOE may encourage collaboration among prospective investigators, to promote joint applications or joint research projects, by using information obtained through other forms of communication.

Collaboration

Applicants are encouraged to collaborate with researchers in other institutions, such as universities, industry, non-profit organizations, federal laboratories and Federally Funded Research and Development Centers (FFRDCs), including the DOE National Laboratories, where appropriate, and to incorporate cost sharing and/or consortia wherever feasible.

Applications will be subjected to scientific merit review (peer review) and will be evaluated against the following evaluation criteria listed in descending order of importance as codified at 10 CFR 605.10(d):

1. Scientific and/or Technical Merit of the Project.
2. Appropriateness of the Proposed Method or Approach.
3. Competency of Applicant's Personnel and Adequacy of Proposed Resources.
4. Reasonableness and Appropriateness of the Proposed Budget.

The evaluation will include program policy factors such as the relevance of the proposed research to the terms of the announcement and an agency's programmatic needs. Note, external peer reviewers are selected with regard to both their scientific expertise and the absence of conflict-of-interest issues. Non-federal reviewers may be used, and submission of an application constitutes agreement that this is acceptable to the investigator(s) and the submitting institution.

To provide a consistent format for the submission, review and solicitation of grant applications submitted under this notice, the preparation and submission of grant applications must follow the guidelines given in the Application Guide for the Office of Science Financial Assistance Program 10 CFR Part 605.

Information about the development, submission of applications, eligibility, limitations, evaluation, the selection process, and other policies and procedures may be found in 10 CFR Part 605, and in the Application Guide for the Office of Science Financial Assistance Program. Electronic access to the Guide and required forms is made available via the World Wide Web at: http://www.er.doe.gov/production/grants/grants.html. On the SC grant face page, form DOE F 4650.2, in block 15, also provide the PI's phone number, fax number and E-mail address. The research description must be 20 pages or less, exclusive of attachments, and must contain an abstract or summary of the proposed research (to include the hypotheses being tested, the proposed experimental design, and the names of all investigators and their affiliations). Attachments include curriculum vitae, QA/QC plan, a listing of all current and pending federal support, and letters of

intent when collaborations are part of the proposed research.

Although the required original and seven copies of the application must be submitted, researchers are asked to submit an electronic version of the abstract of the proposed research in ASCII format along with a valid E-mail address to Ms. Karen Carlson by E-mail at karen.carlson@science.doe.gov. Curriculum vitae should be submitted in a form similar to that of the National Institutes of Health (NIH) or the National Science Foundation (NSF) (two to three pages), for example see: http://www.nsf.gov/bfa/cpo/gpg/fkit.htm#forms-9.

The Office of Science as part of its grant regulations requires at 10 CFR 605.11(b) that a recipient receiving a grant and performing research involving recombinant DNA molecules and/or organisms and viruses containing recombinant DNA molecules shall comply with NIH ''Guidelines for Research Involving Recombinant DNA Molecules'', which is available via the world wide web at: http://www.niehs.nih.gov/odhsb/biosafe/nih/rdna-apr98.pdf, (59 FR 34496, July 5, 1994), or such later revision of those guidelines as may be published in the **Federal Register**. Grantees and contractors must also comply with other federal and state laws and regulations as appropriate, for example, the Toxic Substances Control Act (TSCA) as it applies to genetically modified organisms. If, during the course of the research, a need for regulatory approval arises, these costs are expected to be borne by the investigator and should be included in the proposed budget. Although compliance with NEPA is the responsibility of DOE, grantees proposing to conduct field research are expected to provide information necessary for the DOE to complete the NEPA review and documentation.

Related Funding Opportunities: Investigators may wish to obtain information about the following related funding opportunities:

Department of Energy, Office of Environmental Management: The Environmental Management Science Program (EMSP). Contact: Mr. Mark Gilbertson, Director, Office of Science and Risk Policy, Office of Science and Technology, EM–52, U.S. Department of Energy, 1000 Independence Avenue, S.W., Washington, DC 20585, E-mail mark.gilbertson@em.doe.gov. phone (202) 586–7150. The EMSP home page is available at web site: http://www.em.doe.gov/science/.

(The Catalog of Federal Domestic Assistance Number for this program is 81.049, and the solicitation control number is ERFAP 10 CFR Part 605)

Issued in Washington, D.C. on February 24, 1999.

Ralph H. De Lorenzo,

Acting Associate Director of Science for Resource Management.

[FR Doc. 99–5262 Filed 3–2–99; 8:45 am]

BILLING CODE 6450–01–P

DEPARTMENT OF ENERGY

Federal Energy Regulatory Commission

[Docket No. CP99–218–000]

ANR Pipeline Company; Notice of Application To Amend Certificates

February 25, 1999.

Take notice that on February 17, 1999, ANR Pipeline Company (ANR) filed an abbreviated application in Docket No. CP–99–218–000 pursuant to section 7(c) of the Natural Gas Act and Part 157 of the Commission's regulations for amendment of its certificate of public convenience and necessity authorizing a revised storage field boundary, including fringe protective acreage, for three of its existing storage fields. ANR's proposal is more fully described in its application which is on file with the Commission and open to public inspection. This filing may be viewed on the web at http://www.ferc.fed.us/online/rims.htm (call 202–208–2222 for assistance).

Specifically, ANR request that the information amend the certificates for the Goodwell, Lincoln-Freeman and Reed City Storage Fields located in Newaygo, Clare and Lake and Oceola Counties, Michigan, to allow ANR to acquire storage and mineral rights within the revised boundary of each of the storage fields in order to protect the integrity of its certificated facilities and the interstate gas storage therein. The approximate acreage which ANR is seeking to acquire within the proposed boundary of the Goodwell field includes storage rights to 80 acres and mineral rights to 160 acres. For the Lincoln-Freeman field, ANR is seeking to acquire storage rights to 620 acres and mineral rights to 1,103 acres. Lastly, at the Reed City field, ANR is seeking to acquire storage rights to 700 acres, and mineral rights to 400 acres. ANR states that approval of the de facto boundary of each of the storage fields will not increase the storage capacity or the deliverability of the fields.

Any person desiring to be heard or to make any protest with reference to said application should on or before March 18, 1999, file with the Federal Energy Regulatory Commission, 888 Fist Street, NE., Washington, DC 20426, a motion to intervene or a protest in accordance with the requirements of the Commission's Rules of Practice and Procedure (18 CFR 385.211 and 385.214) and the Regulations under the Natural Gas Act (18 CFR 157.10). All protests filed with the Commission will be considered by it in determining the appropriate action to be taken but will not serve to make the protestants parties to the proceeding. The Commission's rules require that protestors provide copies of their protests to the party or parties against whom the protests are directed. Any person wishing to become a party to a proceeding or to participate as a party in any hearing therein must file a motion to intervene in accordance with the Commission's Rules.

A person obtaining intervenor status will be placed on the service list maintained by the Secretary of the Commission and will receive copies of all documents filed by the applicant and by every one of the intervenors. An intervenor can file for rehearing of any Commission order and can petition for court review of any such order. However, an intervenor must submit copies of comments or any other filings it makes with the Commission to every other intervenor in the proceeding, as well as an original and 14 copies with the Commission.

A person does not have to intervene, however, in order to have environmental comments considered. A person, instead, may submit two copies of comments to the Secretary of the Commission. Commenters will be placed on the Commission's environmental mailing list, will receive copies of environmental documents and will be able to participate in meetings associated with the Commission's environmental review process. Commenters will not be required to serve copies of filed documents on all other parties. However, commenters will not receive copies of all documents filed by the parties or issued by the Commission and will not have the right to seek rehearing or appeal the Commission's final order to a federal court.

The Commission will consider all comments and concerns equally, whether filed by commenters of those requesting intervenor status.

Take further notice that, pursuant to the authority contained in and subject to jurisdiction conferred upon the Federal Energy Regulatory Commission buy Sections 7 and 15 of the Natural Gas Act and the Commissions' Rules of Practice and Procedures, a hearing will be held without further notice before the

Commission or its designee on this application if no motion to intervene is filed within the time required herein, if the Commission on its own review of the matter finds that a grant of the certificate is required by the public convenience and necessity. If a motion for leave to intervene is timely filed or if the Commission on its motion believes that a formal hearing is required, further notice of such hearing will be duly given.

Under the procedure herein provided for, unless otherwise advised, it will be unnecessary for ANR to appear or be represented at the hearing.

Linwood A Watson, Jr.,

Acting Secretary.

[FR Doc. 99–5151 Filed 3–2–99; 8:45 am]

BILLING CODE 6712–01–M

DEPARTMENT OF ENERGY

Federal Energy Regulatory Commission

[Docket No. TM99–1–53–001]

KN Interstate Gas Transmission Co.; Notice of Tariff Filing

February 25, 1999.

Take notice that on February 22, 1999, KN Interstate Gas Transmission Co. (KNI) tendered for filing as part of its FERC Gas Tariff, First Revised Volume No. 1–C, Substitute Eleventh Revised Sheet No. 4, with an effective date of January 1, 1999.

KNI states that this filing is made to correct an inadvertent error that occurred while submitting revised GRI Rates for the year 1999 in Docket No. TM99–1–53–000.

KNI states that copies of this filing has been served upon all affected firm customers of KNI and applicable state agencies.

Any person desiring to protest this filing should file a protest with the Federal Energy Regulatory Commission, 888 First Street, NE, Washington, DC 20426, in accordance with Section 385.211 of the Commission's Rules and Regulations. All such protests must be filed as provided in Section 154.210 of the Commission's Regulations. Protests will be considered by the Commission in determining the appropriate action to be taken, but will not serve to make protestants parties to the proceedings. Copies of this filing are on file with the commission and are available for public inspection in the Public Reference Room. This filing may be viewed on the web at http://www.ferc.fed.us/online/rims.htm (call 202–208–2222 for assistance).

Linwood A. Watson, Jr.,

Acting Secretary.

[FR Doc. 99–5157 Filed 3–2–99; 8:45 am]

BILLING CODE 6717–01–M

DEPARTMENT OF ENERGY

Federal Energy Regulatory Commission

[Docket No. RP99–176–004]

Natural Gas Pipeline Company of America; Notice of Compliance Filing

February 25, 1999.

Take notice that on February 22, 1999, Natural Gas Pipeline Company of America (Natural) tendered for filing as part of its FERC Gas Tariff, Sixth Revised Volume No. 1, Substitute Original Sheet No. 224J.02, to be effective January 1, 1999.

Natural states that the filing is submitted pursuant to the Commission's letter order issued on February 10, 1999 in Docket No. RP99–176–001, which directed Natural to file a revised tariff sheet to delete the requirement that negotiated rate formula bids must use the same formula as the pre-arranged agreement.

Natural requested any waivers which may be required to permit Substitute Original Sheet No. 224J.02 to become effective January 1, 1999, consistent with the Commission's order issued December 30, 1998 in Docket No. RP99–176.000.

Natural states that copies of the filing have been mailed to its customers, interested state regulatory agencies and all parties set out on the Commission's official service list in Docket No. RP99–176.

Any person desiring to protest this filing should file a protest with the Federal Energy Regulatory Commission, 888 First Street, NE., Washington, DC 20426, in accordance with Section 385.211 of the Commission's Rules and Regulations. All such protests must be filed as provided in Section 154.210 of the Commission's Regulations. Protests will be considered by the Commission in determining the appropriate action to be taken, but will not serve to make protestants parties to the proceedings. Copies of this filing are on file with the Commission and are available for public inspection in the Public Reference Room. This filing may be viewed on the web at http://www.ferc.fed.us/online/rims.htm (call 202–208–2222 for assistance).

Linwood A. Watson, Jr.,

Acting Secretary.

[FR Doc. 99–5155 Filed 3–2–99; 8:45 am]

BILLING CODE 6717–01–M

DEPARTMENT OF ENERGY

Federal Energy Regulatory Commission

[Docket No. RP98–75–001]

Panhandle Eastern Pipe Line Company; Notice of Filing

February 25, 1999.

Take notice that on February 22, 1999, Panhandle Eastern Pipe Line Company (Panhandle) tendered for filing its reconciliation report in accordance with Section 18.14 of the General Terms and Conditions of its FERC Gas Tariff, First Revised Volume No. 1 and the Commission's December 24, 1997 letter order in Docket No. RP98–75–000. The Commission's letter order required the filing of a reconciliation report as soon as practicable following the termination of the Miscellaneous Stranded Cost Volumetric Surcharge.

Panhandle states that in Docket No. RP98–75–000 the Miscellaneous Stranded Cost Volumetric Surcharge applicable to Rates Schedules IT and EIT was established for the twelve month reconciliation recovery period commencing January 1, 1998. On December 1, 1998, Panhandle filed in Docket No. RP99–175–000 to remove the Miscellaneous Stranded Cost Volumetric Surcharge from its rates effective January 1, 1999. Panhandle's filing was approved by a Commission letter order issued December 30, 1998.

Panhandle states that copies of this filing are being served on all parties to the proceeding in Docket No. RP98–75–000.

Any person desiring to protest said filing should file a protest with the Federal Energy Regulatory Commission, 888 First Street, NE., Washington, DC 20246, in accordance with Section 385.211 of the Commission's Rules and Regulations. All such protests must be filed on or before March 4, 1999. Protests will be considered by the Commission in determining the appropriate action to be taken, but will not serve to make protestants parties to the proceedings. Copies of this filing are on file with the Commission and are available for public inspection in the Public Reference Room. This filing may be viewed on the web at http://

www.ferc.fed.us/online/rims.htm (call 202–208–2222 for assistance).

Linwood A. Watson, Jr.,

Acting Secretary.

[FR Doc. 99–5154 Filed 3–2–99; 8:45 am]

BILLING CODE 6717–01–M

DEPARTMENT OF ENERGY

Federal Energy Regulatory Commission

[Docket No. RP99–199–001]

Panhandle Eastern Pipe Line Company; Notice of Compliance Filing

February 25, 1999.

Take notice that on February 22, 1999, Panhandle Eastern Pipe Line Company (Panhandle) tendered for filing as part of its FERC Gas Tariff, First Revised Volume No. 1, the revised tariff sheets listed on Appendix A attached to the filing to be effective February 6, 1999.

Panhandle states that the purpose of this filing is to comply with the Commission's Letter Order issued on February 5, 1999 in Docket No. RP99–199–000. The revised tariff sheets included herewith modify certain of Panhandle's pro forma service agreements by removing language from the specific details regarding types of discounts Panhandle may agree to, which the Commission directed Panhandle to remove. Specifically, the clarifications on rate components and overall rate have been removed from the pro forma service agreements for Rate Schedules FT, EFT, SCT, IT, EIT, IOS, IIOS, WS, IWS, PS, FS and LFT.

Panhandle states that copies of this filing are being served on all affected customers, applicable state regulatory agencies and all parties to this proceeding.

Any person desiring to protest this filing should file a protest with the Federal Energy Regulatory Commission, 888 First Street, NE., Washington, DC 20426, in accordance with Section 385.211 of the Commission's Rules and Regulations. All such protests must be filed as provided in Section 154.210 of the Commission's Regulations. Protests will be considered by the Commission in determining the appropriate action to be taken, but will not serve to make protestants parties to the proceedings. Copies of this filing are on file with the Commission and are available for public inspection in the Public Reference Room. This filing may be viewed on the web at http://www.ferc.fed.us/online/rims.htm (call 202–208–2222 for assistance).

Linwood A. Watson, Jr.,

Acting Secretary.

[FR Doc. 99–5156 Filed 3–2–99; 8:45 am]

BILLING CODE 6717–01–M

DEPARTMENT OF ENERGY

Federal Energy Regulatory Commission

[Docket No. CP99–220–000]

Reliant Energy Gas Transmission Company; Notice of Request Under Blanket Authorization

February 25, 1999.

Take notice that on February 18, 1999, Reliant Energy Gas Transmission Company (REGT), 1111 Louisiana Street, Houston, Texas 77002, filed in Docket No. CP99–220–000 a request pursuant to Sections 157.205 and 157.212 of the Commission's Regulations (18 CFR 157.205, 157.212) under the Natural Gas Act (NGA) for authorization to operate meter station facilities in Union County, Arkansas, under REGT's blanket certificate issued in Docket Nos. CP82–384–000 and CP82–384–001, pursuant to Section 7 of the NGA, all as more fully set forth in the request that is on file with the Commission and open to public inspection. This filing may be viewed on the web at http:///www.ferc.fed.us/online/rims.htm. (call 202–208–2222 for assistance.

REGT proposes to operate a 2-inch I-shape meter station which is being installed under Natural Gas Policy Act Section 311 authorization for the delivery of gas to Reliant Energy Arkla (Arkla), a distribution division of Reliant Energy, Incorporated, which is the parent company of REGT. It is stated that the meter station will be used to deliver gas being transported under Section 311 as well as Part 284 of the Commission's regulations. It is asserted that the facilities will accommodate deliveries of up to 50 Dt equivalent of gas on a peak day and approximately 18,250 Dt equivalent on an annual basis. REGT estimates the construction cost at $1,583, and states that it will be reimbursed by Arkla for the Cost.

It is stated that REGT's FERC Gas Tariff does not prohibit additional delivery points. It is explained that the volume of gas delivered to Arkla will be within Arkla's existing contract quantity and that REGT has sufficient capacity to accomplish the deliveries without detriment or disadvantage to its other customers.

Any person or the Commission's staff may, within 45 days after issuance of the instant notice by the Commission, file pursuant to Rule 214 of the Commission's Procedural Rules (18 CFR 385.214) a motion to intervene or notice of intervention and pursuant to Section 157.205 of the Regulations under the Natural Gas Act (18 CFR 157.205) a protest to the request. If no protest is filed within the time allowed therefor, the proposed activity shall be deemed to be authorized effective the day after the time allowed for filing a protest. If a protest is filed and not withdrawn within 30 days after the time allowed for filing a protest, the instant request shall be treated as an application for authorization pursuant to Section 7 of the Natural Gas Act.

Linwood A. Watson, Jr.

Acting Secretary.

[FR Doc. 99–5152 Filed 3–2–99; 8:45 am]

BILLING CODE 6717–01–M

DEPARTMENT OF ENERGY

Federal Energy Regulatory Commission

[Docket No. CP99–221–000]

Reliant Energy Gas Transmission Company; Notice of Request Under Blanket Authorization

February 25, 1999.

Take notice that on February 18, 1999, Reliant Energy Gas Transmission Company (REGT), 1111 Louisiana, Houston, Texas 77002–5231, filed in Docket No. CP99–221–000 a request pursuant to Sections 157.205 and 157.211 of the Commission's Regulations under the Natural Gas Act (18 CFR 157.205 and 157.211) for authorization to construct and operate certain facilities in Oklahoma under REGT's blanket certificate issued in Docket No. CP82–384–000 and CP82–384–001 pursuant to Section 7 of the Natural Gas Act, all as more fully set forth in the request that is on file with the Commission and open to public inspection. This filing may be viewed on the web at http://www.ferc.fed.us/online/rims.htm (call 202–208–2222 for assistance).

REGT specifically proposes to construct and operate two 2-inch delivery taps, first-cut regulators and one 4-inch meter station to serve Reliant Energy ARKLA, a division of Reliant Energy, Incorporated (ARKLA). The proposed facilities will be located on REGT's lines 10 and 10–1 in Stephens County, Oklahoma. The total estimated volume to be delivered to this meter station is 400,000 Dth annually and

4,000 Dth on a peak day. The facilities will be constructed at an estimated cost of $75,369 and ARKLA will reimburse REGT the construction costs.

Any person or the Commission's staff may, within 45 days after issuance of the instant notice by the Commission, file pursuant to Rule 214 of the Commission's Procedural Rules (18 CFR 385.214) a motion to intervene or notice of intervention and pursuant to Section 157.205 of the Regulations under the Natural Gas Act (18 CFR 157.205) a protest to the request. If no protest is filed within the time allowed therefor, the proposed activity shall be deemed to be authorized effective the day after the time allowed for filing a protest. If a protest is filed and not withdrawn within 30 days after the time allowed for filing a protest, the instant request shall be treated as an application for authorization pursuant to Section 7 of the Natural Gas Act.

Linwood A. Watson, Jr.,

Acting Secretary.

[FR Doc. 99–5159 Filed 3–2–99; 8:45 am]

BILLING CODE 6717–01–M

DEPARTMENT OF ENERGY

Federal Energy Regulatory Commission

[Docket No. RP99–200–001]

Trunkline Gas Company; Notice of Compliance Filing

February 25, 1999.

Take notice that on February 22, 1999, Trunkline Gas Company (Trunkline) tendered for filing as part of its FERC Gas Tariff, First Revised Volume No. 1, the revised tariff sheets listed on Appendix A attached to the filing to be effective February 6, 1999.

Trunkline states that the purpose of this filing is to comply with the Commission's Letter Order issued on February 5, 1999 in Docket No. RP99–200–000. The revised tariff sheets included herewith modify certain of Trunkline's pro forma service agreements by removing language from the specific details regarding types of discounts Trunkline may agree to, which the Commission directed Trunkline to remove from the pro forma service agreements.

Trunkline states that copies of this filing are being served on all affected customers, applicable state regulatory agencies and parties to this proceeding.

Any person desiring to protest this filing should file a protest with the Federal Energy Regulatory Commission, 888 First Street, N.E., Washington, D.C. 20426, in accordance with Section 385.211 of the Commission's Rules and Regulations. All such protests must be filed as provided in Section 154.210 of the Commission's Regulations. Protests will be considered by the Commission in determining the appropriate action to be taken, but will not serve to make protestants parties to the proceedings. Copies of this filing are on file with the Commission and are available for public inspection in the Public Reference Room. This filing may be viewed on the web at http://www.ferc.fed.us/online/rims.htm (call 202–208–2222 for assistance).

Linwood A. Watson, Jr.,

Acting Secretary.

[FR Doc. 99–5158 Filed 3–2–99; 8:45 am]

BILLING CODE 6717–01–M

DEPARTMENT OF ENERGY

Federal Energy Regulatory Commission

[Docket No. PR99–9–000]

The Union Light, Heat and Power Company; Notice of Petition for Rate Approval

February 25, 1999.

Take notice that on February 12, 1999, The Union Light, Heat and Power Company (Union) filed a petition for rate approval, pursuant to Section 284.123(b)(2) of the Commission's Regulations, requesting that the Commission approve as fair and equitable a reservation fee of $0.3441 per MMBtu for firm-no-notice Section 311 transportation services performed on its system. Union states that this rate was developed using the Straight Fixed Variable method of rate design and is a 100 percent reservation charge rate.

Union states that it is an intrastate pipeline within the meaning of Section 2(16) of the NGPA and it owns and operates pipeline facilities in Kentucky. The proposed cost of service and resulting unit rate are based on actual costs incurred for the 12 month period ended November 30, 1998 on Union's system. Union states that it will commence service on the date on which the petition was filed.

Pursuant to Section 284.123(b)(2)(ii), if the Commission does not act within 150 days of the filing date, the rate will be deemed to be fair and equitable and not in excess of an amount which interstate pipelines would be permitted to charge for similar transportation service. The Commission may, prior to the expiration of the 150-day period, extend the time for action or institute a proceeding to afford parties an opportunity for written comments and for the oral presentation of views, data, and arguments.

Any person desiring to participate in this rate proceeding must file a motion to intervene in accordance with Sections 385.211 and 835.214 of the Commission's Rules of Practice and Procedures. All motions must be filed with the Secretary of the Commission on or before March 9, 1999. The petition for rate approval is on file with the Commission and is available for public inspection. This filing may be viewed on the web at http://www.ferc.fed.us/online/rims.htm (Call 202–208–2222 for assistance).

Linwood A. Watson, Jr.,

Acting Secretary.

[FR Doc. 99–5153 Filed 3–2–99; 8:45 am]

BILLING CODE 6717–01–M

DEPARTMENT OF ENERGY

Federal Energy Regulatory Commission

[Docket No. EC99–39–000, et al.]

Storm Lake Power Partners II LLC, et al.; Electric Rate and Corporate Regulation Filings

February 24, 1999.

Take notice that the following filings have been made with the Commission:

1. Storm Lake Power Partners II LLC

[Docket No. EC99–39–000]

Take notice that on February 18, 1999, Storm Lake Power Partners II LLC (Storm Lake II) filed an application under Section 203 of the Federal Power Act for approval to transfer a member interest in Storm Lake II to an affiliate of General Electric Capital Corporation. Storm Lake II is constructing a wind power generation facility in Buena Vista and Cherokeye Counties, Iowa. Following construction of the facility, Storm Lake II will make sales of capacity and energy at market-based rates to IES Utilities, Inc.

Comment date: March 22, 1999, in accordance with Standard Paragraph E at the end of this notice.

2. Central Illinois Light Company, and The AES Corporation

[Docket No. EC99–40–000]

Take notice that on February 19, 1999, Central Illinois Light Company (CILCO) and The AES Corporation (AES) submitted for filing, pursuant to section 203 of the Federal Power Act and Part 33 of the Commission's regulations, an application for the approval of the merger of CILCO's parent, CILCORP Inc. (CILCORP), into and with Midwest

Energy, Inc. (Midwest), a wholly-owned subsidiary of AES, with CILCORP being the surviving entity, and thereafter, at the option of AES, the merger of CILCORP into AES.

A copy of the filing has been served upon the regulatory agency of the affected state, the Illinois Commerce Commission.

Comment date: April 22, 1999, in accordance with Standard Paragraph E at the end of this notice.

3. Polaris Electric Power Company

[Docket Nos. ER98–1421–001, ER98–1421–002, ER98–1421–003, ER98–1421–004, and ER98–1421–005]

Take notice that on February 18, 1999, the above-mentioned power marketer filed quarterly reports with the Commission in the above-mentioned proceedings for information only. These filings are available for public inspection and copying in the Public Reference Room or on the Internet at http://www.ferc.fed.us/online/rims.htm for viewing and downloading (call 202–208–2222 for assistance).

4. Alfalfa Electric Cooperative, Inc.

[Docket Nos. ER99–922–000, ER99–923–000, and ER99–924–000]

Take notice that on February 19, 1999, Alfalfa Electric Cooperative, Inc. (Alfalfa Electric), tendered for filing information in response to the Commission's letter order issued on January 13, 1999, in the above-referenced dockets.

Comment date: March 11, 1999, in accordance with Standard Paragraph E at the end of this notice.

5. Wisconsin Public Service Corporation

[Docket No. ER99–994–000]

Take notice that on February 19, 1999, Wisconsin Public Service Corporation (WPSC), tendered for filing an amendment to its December 24, 1998, filing of two short-term transaction specification sheets for wholesale power sales to its affiliate, Upper Peninsula Power Company under its Market-Based Rate Tariff. The amendment documents WPSC's compliance with posting, pricing and reporting requirements for these transactions.

Comment date: March 11, 1999, in accordance with Standard Paragraph E at the end of this notice.

6. Energy Atlantic, LLC

[Docket No. ER99–1499–000]

Take notice that on February 18, 1999, Energy Atlantic, LLC tendered for filing notice withdrawing its January 27, 1999, filing of service agreements for the sale of power at market-based rates and service agreements for the reassignment of transmission capacity with Griffin Energy Marketing, LLC, Holyoke Gas and Electric Department, Bangor Hydro-Electric Company, and Rainbow Energy Marketing Corporation.

Comment date: March 10, 1999, in accordance with Standard Paragraph E at the end of this notice.

7. PJM Interconnection, L.L.C.

[Docket No. ER99–1550–000]

Take notice that on February 18, 1999, PJM Interconnection, L.L.C. (PJM), tendered for filing an amendment to its January 27, 1999, filing and also tenders for filing additional changes to the PJM Open Access Transmission Tariff (PJM Tariff) regarding the reservation of monthly short-term firm transmission service.

Copies of this filing were served upon all members of PJM, each state electric utility regulatory commission in the PJM control area, and each person on the official service list compiled by the Commission in the above-referenced docket.

Comment date: March 10, 1999, in accordance with Standard Paragraph E at the end of this notice.

8. Legacy Group, Inc.

[Docket No. ER99–1719–000]

Take notice that on February 19, 1999, Legacy Group, Inc., (Legacy), tendered for filing an amendment to its February 4, 1999, petition filed with the Commission.

Comment date: March 11, 1999, in accordance with Standard Paragraph E at the end of this notice.

9. PacifiCorp

[Docket No. ER99–1870–000]

Take notice that on February 19, 1999, PacifiCorp tendered for filing in accordance with 18 CFR Part 35 of the Commission's Rules and Regulations, a replacement of the fourth page of the ''Scope of Work'' contained in Annex C to the Generation Interconnection Agreement (Agreement) between PacifiCorp and Klamath Falls dated February 17, 1999.

Copies of this filing were supplied to the Washington Utilities and Transportation Commission and the Public Utility Commission of Oregon.

Comment date: March 11, 1999, in accordance with Standard Paragraph E at the end of this notice.

10. NIPSCO Energy Services, Inc.

[Docket No. ER99–1874–000]

Take notice that on February 19, 1999, NIPSCO Energy Services, Inc. (NIPSCO Energy), tendered for filing its Notice of Cancellation of FERC Electric Rate Schedule No. 1, effective April 22, 1999. NIPSCO Energy's FERC Electric Rate Schedule No. 1, was allowed to become effective on June 1, 1996 (75 FERC ¶ 61,213 (1996)).

Comment date: March 11, 1999, in accordance with Standard Paragraph E at the end of this notice.

11. Canadian Niagara Power Company, Limited

[Docket No. ER99–1875–000]

Take notice that on February 19, 1999, Canadian Niagara Power Company, Limited (Canadian Niagara), tendered for filing pursuant to Section 205 of the Federal Power Act, and Part 35 of the Commission's Regulations, a Petition for authorization to make sales of electric capacity and energy, including certain ancillary services, at market-based rates and for related waivers and blanket authorizations.

Comment date: March 11, 1999, in accordance with Standard Paragraph E at the end of this notice.

12. PS Energy Group, Inc.

[Docket No. ER99–1876–000]

Take notice that on February 18, 1999, PS Energy Group, Inc., P.O. Box 29399, Atlanta, GA 30359, tendered for filing its notice that effective April 20, 1999, PS Energy Group, Inc. (formerly Petroleum Source & Systems Group, Inc.), adopts, ratifies and makes its own in every respect all applicable rate schedules and supplements thereto, to Rate Schedule FERC No. 1, hereto filed with the Federal Energy Regulatory Commission by Petroleum Source & Systems Group, Inc.

Comment date: March 10, 1999, in accordance with Standard Paragraph E at the end of this notice.

13. Great Bay Power Corporation

[Docket No. ER99–1877–000]

Take notice that on February 19, 1999, Great Bay Power Corporation (Great Bay), tendered for filing a service agreement between Southern Company Energy Marketing, L.P., and Great Bay for service under Great Bay's Tariff for Short Term Sales (Tariff). The Tariff was accepted for filing by the Commission on May 17, 1996, effective as of December 30, 1995, in Docket No. ER96–726–000. The Commission accepted amendments to the Tariff, effective July 24, 1998, by letter order issued July 22, 1998 in Docket No. ER98–3470–000.

The service agreement is proposed to be effective January 12, 1999.

Comment date: March 11, 1999, in accordance with Standard Paragraph E at the end of this notice.

14. PECO Energy Company

[Docket No. ER99–1878–000]

Take notice that on February 19, 1999, PECO Energy Company (PECO), tendered for filing a Service Agreement dated February 16, 1999 with Entergy Services, Inc. (ESI), under PECO's FERC Electric Tariff Original Volume No. 1 (Tariff). The Service Agreement adds ESI as a customer under the Tariff.

PECO requests an effective date of February 16, 1999, for the Service Agreement.

PECO states that copies of this filing have been supplied to ESI and to the Pennsylvania Public Utility Commission.

Comment date: March 22, 1999, in accordance with Standard Paragraph E at the end of this notice.

15. California Independent System Operator Corporation

[Docket No. ER99–1879–000]

Take notice that on February 19, 1999, the California Independent System Operator Corporation (ISO), tendered for filing a Meter Service Agreement for ISO Metered Entities (Meter Service Agreement) between the ISO and Harbor Cogeneration Company (Harbor Cogeneration), for acceptance by the Commission.

The ISO states that this filing has been served on Harbor Cogeneration and the California Public Utilities Commission.

The ISO is requesting waiver of the 60-day notice requirement to allow the Meter Service Agreement to be made effective as of February 5, 1999.

Comment date: March 11, 1999, in accordance with Standard Paragraph E at the end of this notice.

16. California Independent System Operator Corporation

[Docket No. ER99–1880–000]

Take notice that on February 19, 1999, the California Independent System Operator Corporation (ISO), tendered for filing a Participating Generator Agreement between Harbor Cogeneration Company (Harbor Cogeneration) and the ISO for acceptance by the Commission.

The ISO states that this filing has been served on Harbor Cogeneration and the California Public Utilities Commission.

The ISO is requesting waiver of the 60-day notice requirement to allow the Participating Generator Agreement to be made effective as of February 5, 1999.

Comment date: March 11, 1999, in accordance with Standard Paragraph E at the end of this notice.

17. Citizens Utilities Company

[Docket No. ER99–1881–000]

Take notice that on February 19, 1999, Citizens Utilities Company tendered for filing a revised Attachment E, (Index of Point-to-Point Transmission Service Customers) to update the Open Access Transmission Tariff of the Vermont Electric Division of Citizens Utilities Company.

Comment date: March 11, 1999, in accordance with Standard Paragraph E at the end of this notice.

18. Citizens Utilities Company

[Docket No. ER99–1882–000]

Take notice that on February 19, 1999, Citizens Utilities Company tendered for filing on behalf of itself and H.Q. Energy Services (U.S.) Inc., a Service Agreement for Non-Firm Point-to-Point Transmission Service under Citizens' Open Access Transmission Tariff.

Comment date: March 11, 1999, in accordance with Standard Paragraph E at the end of this notice.

19. California Power Exchange Corporation

[Docket No. ER99–1883–000]

Take notice that on February 19, 1999, the California Power Exchange Corporation (PX), tendered for filing Amendment No. 9, to the PX Tariff, which establishes a PX ''Bookout'' option under which offsetting transactions at common delivery points located outside of the California Independent System Operator (ISO) grid will be matched and reported as net schedules of imports into or exports from the ISO grid. The PX proposes to make Amendment No. 9 effective on the later of April 25, 1999, which is more than 60 days after the date of filing, or when all necessary software enhancements are operational.

The PX states that it has served copies of its filing on the PX Participants and on the California Public Utilities Commission. The filing also has been posted on the PX website at http://www.calpx.com.

Comment date: March 11, 1999, in accordance with Standard Paragraph E at the end of this notice.

20. Southern California Edison Company

[Docket No. ER99–1889–000]

Take notice that on February 19, 1999, Southern California Edison Company (SCE), tendered for filing its notice of cancellation of the First Revised Sheet No. 75A to its Transmission Owners Tariff.

SCE requests that the Commission deem this Notice of Cancellation of Sheet 75A, effective on April 1, 1999. Accordingly SCE respectfully requests waiver of the Commission's prior notice requirements.

Comment date: March 11, 1999, in accordance with Standard Paragraph E at the end of this notice.

Standard Paragraphs

E. Any person desiring to be heard or to protest such filing should file a motion to intervene or protest with the Federal Energy Regulatory Commission, 888 First Street, N.E., Washington, D.C. 20426, in accordance with Rules 211 and 214 of the Commission's Rules of Practice and Procedure (18 CFR 385.211 and 385.214). All such motions or protests should be filed on or before the comment date. Protests will be considered by the Commission in determining the appropriate action to be taken, but will not serve to make protestants parties to the proceeding. Any person wishing to become a party must file a motion to intervene. Copies of these filings are on file with the Commission and are available for public inspection. This filing may also be viewed on the Internet at http://www.ferc.fed.us/online/rims.htm (call 202–208–222 for assistance).

David P. Boergers,

Secretary.

[FR Doc. 99–5150 Filed 3–2–99; 8:45 am]

BILLING CODE 6717–01–P

ENVIRONMENTAL PROTECTION AGENCY

[OPP–00582; FRL–6059–1]

Federal Insecticide, Fungicide, and Rodenticide Act Section 29 Annual Report on Conditional Registrations; Renewal of Pesticide Information Collection Activities and Request for Comments

AGENCY: Environmental Protection Agency (EPA).

ACTION: Notice.

SUMMARY: In compliance with the Paperwork Reduction Act (PRA) (44 U.S.C. 3501 *et seq.*), this notice announces that EPA is seeking public comment on the following Information Collection Request (ICR): ''Federal Insecticide, Fungicide, and Rodenticide Act Section 29 Annual Report on Conditional Registrations'' (EPA ICR No. 0601.06, OMB No. 2070–0026). This ICR involves a collection activity that is currently approved. The ICR describes the nature of the information collection activity and its expected burden and costs. Before submitting this ICR to the

Office of Management and Budget (OMB) for review and approval under the PRA, EPA is soliciting comments on specific aspects of the collection.

DATES: Written comments must be received on or before May 3, 1999.

ADDRESSES: Comments may be submitted by mail, electronically, or in person. Please follow the detailed instructions for each method as provided in Unit III. of this document.

FOR FURTHER INFORMATION CONTACT: Cameo Smoot, Office of Pesticide Programs, Mail Code 7506C, Environmental Protection Agency, 401 M St., SW., Washington, DC 20460, Telephone: 703–305–5454, Fax: 703–305–5884, e-mail: smoot.cameo@epa.gov.

SUPPLEMENTARY INFORMATION:

I. Does This Notice Apply to Me?

You may be potentially affected by this notice if you are a pesticide registrant with a conditional pesticide registration or you have submitted an application for a conditional registration of your product. EPA may issue conditional registrations for pesticides containing an active ingredient not contained in any currently registered pesticide for a period reasonably sufficient for the generation and submission of data. By law, on an annual basis, EPA must report to Congress by February 16 of each year the total number of conditional registrations and applications for conditional registration the Agency has considered pursuant to section 3(c)(7)(B) and 3(c)(7)(C) of the Federal Insecticide, Fungicide, and Rodenticide Act (FIFRA). While most of the data for the reporting requirement is obtained from Agency files, information related to the production volume of a pesticide product must be collected from the registrants. Potentially affected categories and entities may include, but are not limited to the following:

Category	NAICS Code	SIC Codes	Examples of Potentially Affected Entities
Pesticide and other agricultural chemical manufacturing	325320	286—Industrial organic chemicals 287—Agricultural chemicals	Pesticide registrants holding a conditional registration or applicants for a conditional pesticide registration

This table is not intended to be exhaustive, but rather provides a guide for readers regarding entities likely to be affected by this action. Other types of entities not listed in this table could also be affected. You or your business are affected by this action if you have a conditional pesticide registration with the Agency. If you have any questions regarding the applicability of this action to a particular entity, consult the technical person listed in the ''FOR FURTHER INFORMATION CONTACT'' section.

II. How Can I Get Additional Information or Copies of This Document or Other Support Documents?

A. Electronic Availability

Electronic copies of this document and the ICR are available from the EPA Home Page at the **Federal Register** - Environmental Documents entry for this document under ''Laws and Regulations'' (http://www.epa.gov/fedrgstr/). You can easily follow the menu to find this **Federal Register** notice using the publication date or the **Federal Register** citation for this notice. Although a copy of the ICR is posted with the **Federal Register** notice, you can also access a copy of the ICR by going directly to http://www.epa.gov/icr/. You can then easily follow the menu to locate this ICR by the EPA ICR number, the OMB control number, or the title of the ICR.

B. Fax-on-Demand

Using a faxphone call 202–401–0527 and select item 6059 for a copy of the ICR.

C. In Person or By Phone

If you have any questions or need additional information about this notice or the ICR referenced, please contact the person identified in the ''FOR FURTHER INFORMATION CONTACT'' section.

In addition, the official record for this notice, including the public version, has been established for this notice under docket control number OPP–00582 (including comments and data submitted electronically as described below). A public version of this record, including printed, paper versions of electronic comments, which does not include any information claimed as Confidential Business Information (CBI), is available for inspection in the Office of Pesticide Programs (OPP) Public Docket, Rm. 119, CM #2, 1921 Jefferson Davis Highway, Arlington, VA, from 8:30 a.m. to 4 p.m., Monday through Friday, excluding legal holidays. The OPP Public Docket telephone number is 703–305–5805.

III. How Can I Respond to This Notice?

A. How and to Whom Do I Submit the Comments?

You may submit comments through the mail, in person, or electronically. Be sure to identify the appropriate docket control number, OPP–00582, in your correspondence.

1. *By mail.* Submit written comments to: OPP Public Docket, Public Information and Records Integrity Branch, Information Resources and Services Division (7502C), Office of Pesticide Programs, Environmental Protection Agency, 401 M St., SW., Washington, DC 20460.

2. *In person or by courier.* Deliver written comments to: OPP Public Docket, Public Information and Records Integrity Branch, Rm. 119, CM #2, 1921 Jefferson Davis Highway, Arlington, VA, Telephone: 703–305–5805.

3. *Electronically.* Submit your comments and/or data electronically by e-mail to: opp-docket@epa.gov. Please note that you should not submit any information electronically that you consider to be CBI. Electronic comments must be submitted as an ASCII file avoiding the use of special characters and any form of encryption. Comment and data will also be accepted on disks in WordPerfect 5.1/6.1 or ASCII file format. All comments and data in electronic form must be identified by the docket control number OPP–00582. Electronic comments on this notice may also be filed online at many Federal Depository Libraries.

B. How Should I Handle CBI Information that I Want to Submit to the Agency?

You may claim information that you submit in response to this notice as CBI by marking any part or all of that information as CBI. Information so marked will not be disclosed except in accordance with procedures set forth in 40 CFR part 2. A copy of the comment

that does not contain CBI must also be submitted for inclusion in the public record. Information not marked confidential will be included in the public docket by EPA without prior notice. If you have any questions about CBI or the procedures for claiming CBI, please consult with the technical person listed in the ''FOR FURTHER INFORMATION CONTACT'' section.

C. What Information is EPA Particularly Interested in?

Pursuant to section 3506(c)(2)(A) of the PRA, EPA specifically solicits comments and information to enable it to:

1. Evaluate whether the proposed collections of information are necessary for the proper performance of the functions of the Agency, including whether the information will have practical utility.
2. Evaluate the accuracy of the Agency's estimates of the burdens of the proposed collections of information.
3. Enhance the quality, utility, and clarity of the information to be collected.
4. Minimize the burden of the collections of information on those who are to respond, including through the use of appropriate automated or electronic collection technologies or other forms of information technology, e.g., permitting electronic submission of responses.

D. What Should I Consider When I Prepare My Comments for EPA?

We invite you to provide your views on the various options we propose, new approaches we haven't considered, the potential impacts of the various options (including possible unintended consequences), and any data or information that you would like the Agency to consider during the development of the final action. You may find the following suggestions helpful for preparing your comments:

- Explain your views as clearly as possible.
- Describe any assumptions that you used.
- Provide solid technical information and/or data to support your views.
- If you estimate potential burden or costs, explain how you arrived at the estimate.
- Tell us what you support, as well as what you disagree with.
- Provide specific examples to illustrate your concerns.
- Offer alternative ways to improve the rule or collection activity.
- Make sure to submit your comments by the deadline in this notice.
- At the beginning of your comments (e.g., as part of the ''Subject'' heading), be sure to properly identify the document you are commenting on. You can do this by providing the docket control number assigned to the notice, along with the name, date, and **Federal Register** citation, or by using the appropriate EPA or OMB ICR number.

IV. What Information Collection Activity or ICR Does This Notice Apply to?

EPA is seeking comments on the following ICR:

Title: Federal Insecticide, Fungicide, and Rodenticide Act Section 29 Annual Report on Conditional Registrations.

ICR numbers: EPA ICR No. 0601.06, OMB No. 2070–0026.

ICR status: This ICR is currently scheduled to expire on June 30, 1999. An agency may not conduct or sponsor, and a person is not required to respond to a collection of information, unless it displays a currently valid OMB control number. The OMB control numbers for EPA's information collections appear on the collection instruments or instructions, in the **Federal Register** notices for related rulemakings and ICR notices, and, if the collection is contained in a regulation, in a table of OMB approval numbers in 40 CFR part 9.

Abstract: EPA is responsible for the regulation of pesticides as mandated by FIFRA. FIFRA section 29 requires the EPA Administrator to submit an annual report to Congress before February 16 of each year. The section 29 report is to include the total number of applications for conditional registration under section 3(c)(7)(B) and 3(c)(7)(C) of the FIFRA Act that were filed during the previous fiscal year, and, with respect to those applications approved, the Administrator's findings in each case, the conditions imposed and any modification of such conditions in each case, and the quantities produced of such pesticides. The information collected under this ICR is the annual pesticide product production volume data. While there are no forms associated with this information collection activity, as one of the requirements of conditional registration, registrants are required to submit an annual report to the EPA on the amount (gallons or pounds) of the pesticide product produced during the preceding fiscal year for each registered use.

Each October, EPA assembles all available information on conditional registrations filed with the Agency during the previous fiscal year. Registrants with conditional registrations generally submit the required information automatically. However, if the production volume data has not been received within 30 days of the due date, then EPA contacts registrants by fax or phone to request this information. When all the data is collected, EPA prepares a section 29 report that includes: The number of conditional registrations, their conditions of registration, any changes in conditional registration status or conditions, and the conditionally registered pesticide production volume data. The report also identifies those conditional registrations that have been canceled or that have attained full registration and other administrative changes.

V. What are EPA's Burden and Cost Estimates for This ICR?

Under the PRA, ''burden'' means the total time, effort, or financial resources expended by persons to generate, maintain, retain, or disclose or provide information to or for a Federal Agency. For this collection it includes the time needed to review instructions; develop, acquire, install, and utilize technology and systems for the purposes of collecting, validating, and verifying information, processing and maintaining information, and disclosing and providing information; adjust the existing ways to comply with any previously applicable instructions and requirements; train personnel to be able to respond to a collection of information; search data sources; complete and review the collection of information; and transmit or otherwise disclose the information.

The ICR provides a detailed explanation of this estimate, which is only briefly summarized in this notice. The annual public burden for the section 29 reporting information collection is estimated to average 1.4 hours per response. The following is a summary of the estimates taken from the ICR:

Respondents/affected entities: Pesticide registrants with conditional registrations.

Estimated total number of potential respondents: 30.

Frequency of response: Annually.

Estimated total/average number of responses for each respondent: 2.

Estimated total annual burden hours: 84.

Estimated total annual burden costs: $6,612.

VI. Are There Changes in the Estimates from the Last Approval?

The registrant burden estimate for this information collection has remained at 84 hours per year with the number of respondents reporting and number of conditional registrations each remaining

the same. The individual burden per product for reporting has remained constant at 1.4 hours, while the burden per registrant has remained constant at 2.8 hours with two products per registrant.

VII. What is the Next Step in the Process for This ICR?

EPA will consider the comments received and amend the ICR as appropriate. The final ICR package will then be submitted to OMB for review and approval pursuant to 5 CFR 1320.12. EPA will issue another **Federal Register** notice pursuant to 5 CFR 1320.5(a)(1)(iv) to announce the submission of the ICR to OMB and the opportunity to submit additional comments to OMB. If you have any questions about this ICR or the approval process, please contact the person listed in the ''FOR FURTHER INFORMATION CONTACT'' section.

List of Subjects

Environmental protection, Information collection requests.

Dated: February 18, 1999.

Susan H. Wayland,

Acting Assistant Administrator for Prevention, Pesticides and Toxic Substances.

[FR Doc. 99–5243 Filed 3–2–99; 8:45 am]

BILLING CODE 6560–50–F

ENVIRONMENTAL PROTECTION AGENCY

[FRL–6306–6]

Agency Information Collection Activities: Proposed Collection; Comment Request; Risk Management Program Requirements and Petitions To Modify the List of Regulated Substances under section 112(r) of the Clean Air Act (CAA).

AGENCY: Environmental Protection Agency (EPA).

ACTION: Notice.

SUMMARY: In compliance with the Paperwork Reduction Act (44 U.S.C. 3501 *et seq.*), this notice announces that EPA is planning to submit the following proposed Information Collection Request (ICR) to the Office of Management and Budget (OMB). This ICR combines and renews two previously approved ICRs, Registration and Documentation of Risk Management Plans under section 112(r) of the CAA, ICR No. 1656.03 (expires 7/31/99, OMB Control No. 2050–0144) and Petitions to modify the list of regulated substances under section 112(r) of the CAA, ICR No. 1606.02 (expires 4/30/99, OMB Control No. 2050–0127). On February 22, 1999, OMB approved an ICR submitted for amendments to RMP regulations, ICR No. 1656.05, (expires 7/31/99, OMB Control No. 2050–0144). This combined ICR is now titled: Risk Management Program Requirements and Petitions to modify the list of regulated substances under section 112(r) of the Clean Air Act, ICR No. 1656.06. Before submitting the ICR to OMB for review and approval, EPA is soliciting comments on specific aspects of the proposed information collection as described below.

DATES: Comments must be submitted on or before May 3, 1999.

ADDRESSES: Chemical Emergency Preparedness and Prevention Office, Mailcode 5104, U.S. EPA, 401 M Street SW, Washington DC 20460. Interested persons may obtain a copy of the ICR without charge by contacting the person in **FOR FURTHER INFORMATION CONTACT** section.

FOR FURTHER INFORMATION CONTACT: Sicy Jacob, 202–260–7249, fax no. 202–260–0927, or e-mail: Jacob.Sicy@epamail.epa.gov.

SUPPLEMENTARY INFORMATION:

Affected entities: Entities potentially affected by this action are those stationary sources that have more than a threshold quantity of a regulated substance in a process. Entities more likely to be affected by this action may include chemical and non-chemical manufacturers, petroleum refineries, utilities, federal sources, etc.

Title: Registration and Documentation of Risk Management Plans under section 112(r) of the CAA, ICR No. 1656.03 (expires 7/31/99, OMB Control No. 2050–0144) and Petitions to modify the list of regulated substances under section 112(r) of the CAA, ICR No. 1606.02 (expires 4/30/99, OMB Control No. 2050–0127)

Abstract: The 1990 CAA Amendments added section 112(r) to provide for the prevention and mitigation of accidental releases. Section 112(r) mandates that EPA promulgate a list of ''regulated substances,'' with threshold quantities and establish procedures for the addition and deletion of substances from the list of ''regulated substances''. Processes at stationary sources that contain a threshold quantity of a regulated substance are subject to accidental release prevention regulations promulgated under CAA section 112(r)(7). These two rules are codified as 40 CFR part 68. Part 68 requires that sources with more than a threshold quantity of a regulated substance in a process develop and implement a risk management program and submit a risk management plan by June 21, 1999 to a location specified by EPA. This information collection request (ICR) combines and renews two previously approved ICRs, OMB No. 2050–0144 approved through July 31, 1999 (EPA ICR No. 1656.03) and OMB No. 2050–0127 approved through April 30, 1999 (EPA ICR No. 1606.02).

An agency may not conduct or sponsor, and a person is not required to respond to, a collection of information unless it displays a currently valid OMB control number. The OMB control numbers for EPA's regulations are listed in 40 CFR Part 9 and 48 CFR Chapter 15.

The EPA would like to solicit comments to:

(i) Evaluate whether the proposed collection of information is necessary for the proper performance of the functions of the agency, including whether the information will have practical utility;

(ii) Evaluate the accuracy of the agency's estimate of the burden of the proposed collection of information, including the validity of the methodology and assumptions used;

(iii) Enhance the quality, utility, and clarity of the information to be collected; and

(iv) Minimize the burden of the collection of information on those who are to respond, including through the use of appropriate automated electronic, mechanical, or other technological collection techniques or other forms of information technology, e.g., permitting electronic submission of responses.

Burden Statement: The public reporting burden will depend on the regulatory program tier into which sources are categorized. In this ICR, EPA estimates that only certain entities will be newly subject to the RMP during the three years covered by this ICR. For these newly affected sources, the public reporting burden for rule familiarization is estimated to range between 12 to 35 hours per source. The public reporting burden to prepare and submit a new RMP is estimated to take 6.0 hours for retailers to 10.0 hours for non-chemical manufacturers. For those sources that are already covered by RMP and have submitted their RMP will only have burden for on-site documentation and/or revisions to their RMP. For these sources, the public reporting burden for RMP revisions are estimated to require 3 hours for wholesalers to 8.6 hours for chemical manufacturers. The public record keeping burden to maintain on-site documentation is estimated to range from 2.8 hours for retailers to 279 hours for chemical manufacturers. The public

reporting burden for CBI claims is estimated to be 9.5 hours for certain chemical manufacturing sources. The public reporting burden for individuals filing petitions to amend the list of regulated substances is estimated to be 138 hours. The total annual public reporting burden to become familiar with the rule, complete and submit (or revise) the risk management plan, maintain on-site documentation, substantiate claims for confidential business information, and prepare and submit petitions to amend the list of regulated substances is estimated to be about 460,000 hours over three years, or an annual burden of 150,000 hours.

Burden means the total time, effort, or financial resources expended by persons to generate, maintain, retain, or disclose or provide information to or for a Federal agency. This includes the time needed to review instructions; develop, acquire, install, and utilize technology and systems for the purposes of collecting, validating, and verifying information, processing and maintaining information, and disclosing and providing information; adjust the existing ways to comply with any previously applicable instructions and requirements; train personnel to be able to respond to a collection of information; search data sources; complete and review the collection of information; and transmit or otherwise disclose the information.

Dated: February 25, 1999.

James L. Makris,

Director, Chemical Emergency Preparedness and Prevention Office.

[FR Doc. 99–5239 Filed 3–2–99; 8:45 am]

BILLING CODE 6560–50–P

ENVIRONMENTAL PROTECTION AGENCY

[FRL–6306–5]

Science Advisory Board, RADIATION ADVISORY COMMITTEE (RAC); Notification of Public Advisory Committee Meeting; Open Meeting

Pursuant to the Federal Advisory Committee Act, Public Law 92–463, notice is hereby given that the Science Advisory Board's (SAB's) Radiation Advisory Committee (RAC) will meet on Wednesday, March 24 through Friday, March 26, 1999. The meeting will convene at 10:00 a.m. on the first day in the Science Advisory Board Conference Room 3709 Waterside Mall, and at 9:00 a.m. on the second and third days in the Administrator's Conference Room 1103 West Tower at U.S. EPA Headquarters, 401 M Street, SW, Washington, DC 20460 and adjourn no later than 5:30 pm each day.

All times noted are Eastern Time. The meeting is open to the public, however, due to limited space, seating at the meeting will be on a first-come basis. Important Notice: Documents that are the subject of SAB reviews are normally available from the originating EPA office and are not available from the SAB Office—information concerning availability of documents from the relevant Program Office is included below.

At this meeting, the RAC will: (a) conduct an advisory of a white paper on a methodology for assessing risks from indoor radon based on Biological Effects of Ionizing Radiation (BEIR VI); (b) conduct a consultation on Technologically Enhanced Naturally Occurring Radioactive Materials (TENORM); and (c) briefly discuss projects planned for review in the balance of calendar year 1999 and other projects as time permits.

During this meeting, the RAC intends to draft its advisory on the Office of Radiation and Indoor Air (ORIA) white paper, focusing on the technical aspects of the Agency's methodology for estimating cancer risks from exposure to indoor radon in light of the National Academy of Sciences (NAS) BEIR VI committee report entitled ''Proposed EPA Methodology for Assessing Risks from Indoor Radon Based on BEIR VI,'' dated February, 1999. The charge questions to be answered include, but are not limited to the following:

(a) Is the overall approach of using the BEIR VI age-concentration model acceptable? (BEIR VI gives several model options);

(b) What advice does the RAC have on refinements and extensions we (the Agency) are considering?; and

(c) Have we (the Agency) adequately accounted for the sources of uncertainty?

Regarding the consultation on the NAS report on Technologically Enhanced Naturally Occurring Radioactive Materials (TENORM), the NAS has issued a report reviewing the technical basis for EPA's guidelines on TENORM. EPA's ORIA is requesting a consultation with the SAB's RAC to identify scientific and technical issues of importance derived from the NAS report that will be helpful to ORIA for specific program activities. Among these activities are development of sections of ORIA's draft scoping document on TENORM.

For Further Information—Members of the public wishing further information concerning the meeting, such as copies of the proposed meeting agenda, or who wish to submit written comments should contact Mrs. Diana L. Pozun at (202) 260–8432; fax (202) 260–7118, or via E-Mail at: pozun.diana@epa.gov. Members of the public who wish to make a brief oral presentation to the Committee must contact Dr. K. Jack Kooyoomjian *in writing* (by letter or by fax—see contact information below) no later than 12 noon Eastern Time, Wednesday, March 17, 1999 in order to be included on the Agenda. In general, public comments will be normally limited to ten minutes per speaker or organization. The request should identify the name of the individual making the presentation, the organization (if any) they will represent, any requirements for audio visual equipment (e.g., overhead projector, 35mm projector, chalkboard, easel, etc), and at least 35 copies of an outline of the issues to be addressed or of the presentation itself. The Science Advisory Board expects that public statements presented at its meetings will not be repetitive of previously submitted oral or written statements. Written comments (at least 35 copies) received in the SAB Staff Office sufficiently prior to a meeting date, may be mailed to the relevant SAB committee or subcommittee prior to its meeting; comments received too close to the meeting date will normally be provided to the committee at its meeting. Written comments may be provided to the relevant committee or subcommittee up until the time of the meeting. For further information, contact Dr. K. Jack Kooyoomjian, Designated Federal Officer for the Radiation Advisory Committee, Science Advisory Board (1400), U.S. EPA, Washington, DC 20460, phone (202)–260–2560; fax (202)–260–7118; or via E-Mail at: kooyoomjian.jack@epa.gov.

For questions pertaining to the white paper, or on any other topics discussed between the SAB's RAC and the ORIA staff, please contact Dr. Mary E. Clark, (6601J), ORIA, U.S. Environmental Protection Agency, 401 M Street, SW, Washington, DC 20460, tel. (202) 564–9348; fax (202)–565–2043; or E-mail: clark.marye@epa.gov. For questions pertaining to the consultation on TENORM, please contact Mr. Loren W. Setlow, ORIA, U.S. Environmental Protection Agency, 401 M Street, SW, Washington, DC 20460, tel. (202) 564–9445; fax (202)–565–2065; or E-mail: setlow.loren@epa.gov. Documents pertaining to BEIR VI, or TENORM may also be obtained on the world wide web at the following address: http://www.nap.edu/reading room/ and search

on ''radon'' or ''naturally occurring radioactive materials,'' respectively.

Additional information concerning the Science Advisory Board, its structure, function, and composition, may be found on the SAB Website (http://www.epa.gov/sab) and in The Annual Report of the Staff Director which is available from the SAB Publications Staff at (202) 260–4126 or via fax at (202) 260–1889. Individuals requiring special accommodation at SAB meetings, including wheelchair access, should contact Dr. Kooyoomjian or Mrs. Pozun at least five business days prior to the meeting so that appropriate arrangements can be made.

Dated: February 24, 1999.

Donald G. Barnes,

Staff Director, Science Advisory Board.

[FR Doc. 99–5235 Filed 3–2–99; 8:45 am]

BILLING CODE 6560–50–U

ENVIRONMENTAL PROTECTION AGENCY

[OPP–30469; FRL–6062–2]

BASF Corporation; Approval of Pesticide Product Registrations

AGENCY: Environmental Protection Agency (EPA).

ACTION: Notice.

SUMMARY: This notice announces Agency approval of applications to register the pesticide products Cygnus Fungicide and Kresoxim-Methyl Manufacturing Use Product containing new active ingredients not included in any previously registered products pursuant to the provisions of section 3(c)(5) of the Federal Insecticide, Fungicide, and Rodenticide Act (FIFRA), as amended.

FOR FURTHER INFORMATION CONTACT: By mail: Mary Waller, Product Manager (PM) 21, Registration Division (7505C), Office of Pesticide Programs, 401 M St., SW., Washington, DC 20460. Office location and telephone number: Rm. 249, CM #2, Environmental Protection Agency, 1921 Jefferson Davis Hwy, Arlington, VA 22202, 703–305–9354; e-mail: waller.mary@epamail.epa.gov.

SUPPLEMENTARY INFORMATION:

Electronic Availability: Electronic copies of this document and the Fact Sheet are available from the EPA home page at the **Federal Register**-Environmental Documents entry for this document under ''Laws and Regulations'' (http://www.epa.gov/fedrgstr/).

EPA received applications from BASF Corporation 26 Davis Drive, P.O. Box 13528, Research Triangle Park, NC 27709–3528, to register the pesticide products Cygnus Fungicide and Kresoxim-Methyl Manufacturing Use Product (EPA File Symbol 7969–REU and 7969–RLG), containing the active ingredient kresoxim-methyl (methyl (*E*)-methoxyimino-2-[2-(o-tolyloxymethyl) phenyl] acetate) at 50.0 and 94.0% respectively, an active ingredient not included in any previously registered products. However, since the notice of receipt of these applications to register the products as required by section 3(c)(4) of FIFRA, as amended did not publish in the **Federal Register**, interested parties may submit written comments within 30 days from the date of publication of this notice for this product only. Comments and data may also be submitted electronically to: opp-docket@epamail.epa.gov.

These applications were approved on September 30, 1998, for the two products listed below:

1. Cygnus Fungicide for use on greenhouse ornamentals (EPA Registration Number 7969–124).

2. Kresoxim-Methyl Manufacturing Use Product for formulating fungicide products; for use on greenhouse ornamentals (EPA Registration Number 7969–153).

The Agency has considered all required data on risks associated with the proposed use of kresoxim-methyl (methyl (*E*)-methoxyimino-2-[2-(o-tolyloxymethyl) phenyl] acetate), and information on social, economic, and environmental benefits to be derived from use. Specifically, the Agency has considered the nature of the chemical and its pattern of use, application methods and rates, and level and extent of potential exposure. Based on these reviews, the Agency was able to make basic health and safety determinations which show that use of kresoxim-methyl(methyl (*E*)-methoxyimino-2-[2-(o-tolyloxymethyl) phenyl] acetate) when used in accordance with widespread and commonly recognized practice, will not generally cause unreasonable adverse effects to the environment.

More detailed information on these registrations are contained in the EPA Pesticide Fact Sheet on kresoxim-methyl (methyl (*E*)-methoxyimino-2-[2-(o-tolyloxymethyl) phenyl] acetate).

A copy of the fact sheet, which provides a summary description of these pesticides, use patterns and formulations, science findings, and the Agency's regulatory position and rationale, may be obtained from the National Technical Information Service (NTIS), 5285 Port Royal Road, Springfield, VA 22161.

In accordance with section 3(c)(2) of FIFRA, a copy of the approved label, the list of data references, the data and other scientific information used to support registration, except for material specifically protected by section 10 of FIFRA, are available for public inspection in the Public Information and Records Integrity Branch, Information Resources and Services Division (7502C), Office of Pesticide Programs, Environmental Protection Agency, Rm. 119, CM #2, Arlington, VA 22202 (703–305–5805). Requests for data must be made in accordance with the provisions of the Freedom of Information Act and must be addressed to the Freedom of Information Office (A-101), 401 M St., SW., Washington, DC 20460. Such requests should: (1) Identify the product name and registration number and (2) specify the data or information desired.

Authority: 7 U.S.C. 136.

List of Subjects

Environmental protection, Pesticides and pests, Product registration.

Dated: February 17, 1999.

James Jones,

Director, Registration Division, Office of Pesticide Programs.

[FR Doc. 99–4831 Filed 3–2–99; 8:45 am]

BILLING CODE 6560–50–F

ENVIRONMENTAL PROTECTION AGENCY

[OPP–30460A; FRL–6064–3]

BASF Corporation; Approval of Pesticide Product Registrations

AGENCY: Environmental Protection Agency (EPA).

ACTION: Notice.

SUMMARY: This notice announces Agency approval of applications submitted by BASF Corporation to conditionally register the pesticide products Diflufenzopyr Technical Herbicide, Sodium Diflufenzopyr Technical Herbicide, and Distinct Herbicide containing new active ingredients not included in any previously registered products pursuant to the provisions of section 3(c)(7)(C) of the Federal Insecticide, Fungicide, and Rodenticide Act (FIFRA), as amended.

FOR FURTHER INFORMATION CONTACT: By mail: Joanne I. Miller, Product Manager (PM) 23, Registration Division (7505C), Office of Pesticide Programs, 401 M St., SW., Washington, DC 20460. Office location and telephone number: Rm. 237, CM #2, Environmental Protection

Agency, 1921 Jefferson Davis Hwy, Arlington, VA 22202, 703–305–6224; e-mail: miller.joanne@epamail.epa.gov.

SUPPLEMENTARY INFORMATION:

Electronic Availability: Electronic copies of this document and the Fact Sheet are available from the EPA home page at the **Federal Register** Environmental Sub-Set entry for this document under ''Laws and Regulations'' (http://www.epa.gov/fedrgstr/).

EPA issued a notice, published the **Federal Register** of September 25, 1998 (63 FR 51351)(FRL–6031–6), which announced that BASF Corp., P.O. Box 13528, Research Triangle Park, NC 27709, had submitted applications to conditionally register the herbicide products Diflufenzopyr Technical Herbicide, Sodium Diflufenzopyr Technical Herbicide, and BAS 662H 70WG (now known as Distinct Herbicide) (EPA File Symbols 7969–RLT, 7969–RLR, and 7969–RLN) respectively, containing active ingredients not included in any previously registered products.

The applications were approved on January 28, 1999, for the products listed below:

1. EPA Registration Number: 7969–157. Product name: Diflufenzopyr Technical Herbicide. Active ingredient: Diflufenzopyr: 2-(1-[([3,5-difluorophenylamino]carbonyl)-hydrazono]ethyl)-3-pyridinecarboxylic acid at 99.1%. For formulation of herbicides for use on field corn.

2. EPA Registration Number: 7969–151. Product name: Sodium Diflufenzopyr Technical Herbicide. Active ingredient: Sodium diflufenzopyr: 2-(1-[([3,5-difluorophenylamino]carbonyl)-hydrazono]ethyl)-3-pyridinecarboxylic acid, sodium salt at 93.0%. For formulation of herbicides for use on field corn.

3. EPA Registration Number: 7969–150. Product name: Distinct Herbicide (formerly BAS 662H 70WG). Active ingredients: Sodium salt of diflufenzopyr: 2-(1-[([3,5-difluorophenylamino]carbonyl]-hydrazono]ethyl)-3-pyridinecarboxylic acid, sodium salt at 21.4% and Sodium salt of 3,6-dichloro-*o*-anisic acid at 55%. For control of annual broadleaf weeds and grasses on corn.

A conditional registration may be granted under section 3(c)(7)(C) of FIFRA for a new active ingredient where certain data are lacking, on condition that such data are received by the end of the conditional registration period and do not meet or exceed the risk criteria set forth in 40 CFR 154.7; that use of the pesticide during the conditional registration period will not cause unreasonable adverse effects; and that use of the pesticide is in the public interest. The Agency has considered the available data on the risks associated with the proposed use of diflufenzopyr or its sodium salt, and information on social, economic, and environmental benefits to be derived from such use. Specifically, the Agency has considered the nature and its pattern of use, application methods and rates, and level and extent of potential exposure. Based on these reviews, the Agency was able to make basic health and safety determinations which show that use of diflufenzopyr or its sodium salt during the period of conditional registration will not cause any unreasonable adverse effect on the environment, and that use of the pesticide is, in the public interest.

Consistent with section 3(c)(7)(C), the Agency has determined that these conditional registrations are in the public interest. Use of the pesticides are of significance to the user community, and appropriate labeling, use directions, and other measures have been taken to ensure that use of the pesticides will not result in unreasonable adverse effects to man and the environment.

Diflufenzopyr is a reduced-risk pesticide that was jointly reviewed by EPA and Canada's Pest Management Regulatory Agency (PMRA).

More detailed information on these conditional registrations is contained in an EPA Pesticide Fact Sheet on diflufenzopyr: 2-(1-[([3,5-difluorophenylamino]carbonyl]-hydrazono]ethyl)-3-pyridinecarboxylic acid, or its sodium salt.

A paper copy of this fact sheet, which provides a summary description of the chemical, use patterns and formulations, science findings, and the Agency's regulatory position and rationale, may be obtained from the National Technical Information Service (NTIS), 5285 Port Royal Road, Springfield, VA 22161.

In accordance with section 3(c)(2) of FIFRA, a copy of the approved label, the list of data references, the data and other scientific information used to support registration, except for material specifically protected by section 10 of FIFRA, are available for public inspection in the Public Information and Records Intregrity Branch, Information Resources and Services Division (7502C), Office of Pesticide Programs, Environmental Protection Agency, Rm. 119, CM #2, Arlington, VA 22202 (703–305–5805). Requests for data must be made in accordance with the provisions of the Freedom of Information Act and must be addressed to the Freedom of Information Office (A-101), 401 M St., SW., Washington, DC 20460. Such requests should: (1) Identify the product name and registration number and (2) specify the data or information desired.

Authority: 7 U.S.C. 136.

List of Subjects

Environmental protection, Pesticides and pests, Product registration.

Dated: February 22, 1999.

James Jones,

Director, Registration Division, Office of Pesticide Programs.

[FR Doc. 99–5241 Filed 3–2–99; 8:45 am]

BILLING CODE 6560–50–F

ENVIRONMENTAL PROTECTION AGENCY

[OPP–64040; FRL–6061–9]

Voluntary Cancellation of Certain Pesticide Registrations

AGENCY: Environmental Protection Agency (EPA)

ACTION: Notice of receipt of requests to terminate uses.

SUMMARY: In accordance with section 6(f)(1) of the Federal Insecticide, Fungicide and Rodenticide Act (FIFRA), as amended, EPA is issuing a notice of receipt of requests from several registrants to amend their registrations to terminate some or all uses for certain products. These requests for voluntary cancellation have been received by the EPA in response to the reregistration eligibility evaluation of these individual pesticide registrations.

DATES: Comments must be submitted on or before April 2, 1999.

ADDRESSES: By mail, submit comments to: Public Information and Records Integrity Branch, Information Resources and Services Division (7502C), Office of Pesticide Programs, 401 M St., SW., Washington, DC 20460. In person deliver comments to Rm. 119, Crystal Mall #2, 1921 Jefferson Davis Highway, Arlington VA.

Comments may also be submitted electronically by sending electronic mail (e-mail) to: opp-docket@epamail.epa.gov.

Electronic comments must be submitted as an ASCII file avoiding the use of special characters and any form of encryption. Comments and data will also be accepted on disks in Wordperfect 5.1/6.1 or ASCII file format. All comments and data must be identified by docket number [OPP–64040]. No Confidential Business

Information (CBI) should be submitted through e-mail. Electronic comments on this notice may be filed online at many Federal Depository Libraries. Additional information on submissions can be found below in this document.

FOR FURTHER INFORMATION CONTACT: By mail:

Product Manager	Pesticide	Office location for mail and Special Courier	Telephone number	e-mail address
Jill Bloom	Chlorothalonil	Special Review and Reregistration Division, (7508C), Office of Pesticide Programs, U.S. Environmental Protection Agency, 401 M St., SW., Washington, DC 20460..	(703) 308–8019	bloom.jill@epamail.epa.gov
		Special Review and Reregistration Division, 6th floor, 1921 Jefferson Davis Hwy, Arlington, VA,.		
Phil Budig	Dicofol	Do.	(703) 308–8029	budig.phil@epamail.epa.gov
Dennis Deziel	Iprodione	Do.	(703) 308–8173	deziel.dennis@epamail.epa.gov
Anne Overstreet	Propachlor	Do.	(703) 308–8068	overstreet.anne@epamail.epa.gov
Kathleen Meier	Vernolate	Do.	(703) 308–8017	meier.kathleen@epamail.epa.gov

SUPPLEMENTARY INFORMATION:

I. Background Information

The EPA is publishing a single notice in response to registrants requests to cancel some or all product registrations for: chlorothalonil, dicofol, iprodione, propachlor, and vernolate. See table below for specific information regarding the cancellation requests.

The EPA has completed the Reregistration Eligibility Decisions (REDs) for dicofol, iprodione, propachlor, and chlorothalonil. The EPA examined potential risk concerns and identified additional data requirements and/or mitigation measures where applicable. The registrants of these chemicals preferred to cancel certain products or uses rather than generating additional data or implementing certain mitigation measures. The Agency is announcing its intent to cancel certain products or uses as requested by the technical registrants. The EPA will consider any comments received as a result of this notice along with comments received during the public comment period on the individual REDs. In the case of vernolate, a Reregistration Eligibility Decision was not issued, however, the registrants have requested voluntary cancellation of the technical and all end use registrations.

II. Requests Made to Amend Registrations

As discussed above, this notice seeks public comment of requests to voluntarily cancel certain or all uses for five pesticides. The table below provides specific information regarding the dates requested for registration amendments, details, terms and conditions under which existing stocks may continue to be used.

6F NOTICE FOR VOLUNTARY CANCELLATION OF THE FOLLOWING CHEMICALS

Chemical	PC Code	Company Name & Address	Nature of action	Products affected	Products cancelled (if any)	Existing stocks provisions for registrants	Comments
Chlorothalonil	081901	GB Biosciences Corp., 1800 Concord Place, P.O. Box 15458, Wilmington, DE 19858	Home Lawn Use deletion	50524–24 50524–07 50524–09 50524–04 50524–195 50524–202 50524–207 50524–209 50524–211 50524–216 50524–221 50524–222	None	February 1, 2000	The registrants are voluntarily cancelling the home lawn use of this fungicide to address the Agency's concern about potential post-application exposure to toddlers around the home.
	Do.	Sostram Corporation, 70 Mansell Court, Suite 230, Roswell, GA	Do.	60063–01 60063–03 60063–05 60063–07 60063–09 60063–10	Do.	Do.	

6F NOTICE FOR VOLUNTARY CANCELLATION OF THE FOLLOWING CHEMICALS—Continued

Chemical	PC Code	Company Name & Address	Nature of action	Products affected	Products cancelled (if any)	Existing stocks provisions for registrants	Comments
Dicofol	010501	Rohm and Haas Company, 100 Independence Mall West, Philadelphia, PA 19106	Residential Turf and Ornamentals use deletion	707–201 707–202 707–203 707–204 707–205 707–229	None	February 1, 2000	Residential turf was deleted from the label in August, 1997. On August 13, 1998, the registrant requested a label amendment which would prohibit the use of the dicofol technical (EPA Reg. No. 707–203 for formulation into a product intended for use on residential lawns or ornamentals thus cancelling all residential uses. This label amendment was submitted in November, 1998.
Iprodione	109801	Rhone-Poulenc Ag, Co., Box 12014, Research Triangle Park, NC 27709.	All Residential Uses; deletion Herbaceous Ornamental Seed Treatment use deletion.	264–453 264–480 264–481 264–482 264–483 264–524 264–527 264–532 264–562 264–563 264–571 538–159 538–182 538–183 538–194 538–217 9779–350 9779–351	None	February 1, 2000.	Cancel all residential uses. These include: residential ornamental usesresidential turf uses, and residential uses on vegetable/small fruit gardens. FR Notice of Availability for Iprodione RED was published December 4, 1998 (63 FR 67066).
Propachlor	019101	Monsanto Company, 700 14th Street, NW., Washington, D.C. 20005.	Dry Flowable product deletion.	524–423	Ramrod/ Atrazine formulation.	June 30, 2000	Cancel the dry flowable formulation. Propachlor is a pre-emergent herbicide applied once per year. Registrant discontinued production in August, 1998.
Vernolate	041404	Zeneca Ag Products, P.O. Box 15458, Wilmington, DE 19850 Drexel Chemical Co., 1700 Channel Avenue, P.O. Box 13327 Memphis, TN 38113.	Technical and all End Use Products deleted.	10182–257 (tech) 10182–169 10182–221	Vernam 7–E Selective Herbicide Vernam®.	February 1, 2000.	Cancel technical and all end use products containing the active ingredient vernolate.
.....	Do.	Drexel Chemical	Do.	19713–255 19713–259	10–G Selective Herbicide Vernam Technical Herbicide.	Do.	Do.

III. Terminations Pursuant to Voluntary Requests

Under section 6(f)(1) of FIFRA, registrants may request at any time that ''a pesticide registration of the registrant be canceled or amended to terminate one or more pesticide uses.'' (7 U.S.C. 136d(f)(1)). Consistent with 6(f)(1) of FIFRA, EPA is publishing this notice of receipt of these requests for voluntary cancellation and allowing 30 days for public comment on the proposed cancellations including the existing stocks provisions. For chemicals with product cancellations affecting minor uses, (i.e., iprodione), the registrant has requested that the Agency complete the voluntary cancellation on a schedule consistent with the RED. Absent adverse public comment, the Agency intends to proceed with the voluntary cancellation in parallel with the final issuance of the RED.

IV. Notification of Intent to Revoke Tolerances (applies to Vernolate only)

This Notice also serves as an advance notification that the Agency will revoke the related tolerances following the cancellation of the uses listed in this Notice, unless there is a request from the public to support the tolerance for

import purposes. It is EPA's general practice to propose revocation of tolerances for residues of pesticide active ingredients for which FIFRA registrations no longer exist, to protect the food supply of the U.S. and to discourage the misuse of pesticides within the United States. In many cases the cancellation of a food use in the U.S. indicates that there are insufficient domestic residue data or other information to support the continuation of the tolerance and an uncertain amount of relevant data concerning residues on imported food. In the absence of relevant data, EPA is unable to make a safety finding regarding the treated food entering the U.S. Interested parties should notify the Agency as soon as possible of the implications on imported food resulting from revocation of the vernolate tolerance, and of their intent to support the tolerance for the canceled use by responding to this Notice. Upon receipt of such notification, EPA will provide interested parties with its import tolerance policy and data requirements, explaining how an interested party should go about retaining a tolerance for import purposes.

V. Procedures for Withdrawal of Request

To withdraw a request for use cancellation, registrants must submit such withdrawal in writing to the appropriate Chemical Review Manager, at the address given above. Any request to withdraw a use cancellation must be postmarked no later than April 2, 1999.

VI. Proposed Acceptance of Use Termination and Existing Stocks Provision

EPA proposes to accept the registrants' request for amendment to terminate some or all registered uses listed in the Table. It is EPA's general practice to accept registrant's requests for cancellation of registrations or specific registered uses.

Notice of the request for cancellation is published primarily for the purpose of alerting affected parties so that they may either attempt to convince the registrant to maintain the registration or apply to register the product themselves. EPA proposes to approve these cancellations expeditiously after the close of the comment period unless the registrant withdraws its request or a compelling reason opposing termination is presented in public comments. If the requests are granted, any use of the above mentioned chemicals would be permitted only if the products are used in accordance with the terms and conditions specified on the label.

EPA also proposes to accept the registrants' requests for existing stocks provisions. Under FIFRA section 6(a)(1), EPA may permit the continued sale and use of a canceled pesticide if such sale or use ''is not inconsistent with the purposes of this Act.'' For each of the chemicals listed in this notice: chlorothalonil, dicofol, iprodione, propachlor, and vernolate, the Agency has concluded that the limited short–term continued use of these pesticides, when used in accordance with the label, will not result in unreasonable risk or adverse effects to human health or the environment.

If the EPA grants any or all of the requested cancellations, it is likely that the Agency will establish an existing stocks provision consistent with the following schedule. The distributors of products containing the active ingredients, as listed in the Table, will be permitted to sell or distribute all remaining inventory for a period of 1 year past the existing stocks provision dates as requested by the registrants (refer to the Table in Unit II of this document). The end–users will then be allowed an additional year (for a total of 2 years beyond the registrant requested date) for the use of existing stocks for each of these chemicals.

VII. Public Comment Procedures

EPA invites interested parties to submit written comments on all facets of this notice. Comments must be submitted by April 2, 1999. Comments must bear a document control number. Three copies of the comments should be submitted to either location listed under ''ADDRESSES'' at the beginning of this notice.

Information submitted as a comment may be claimed confidential by marking any or all information as CBI. EPA will not disclose information so marked, except in accordance with procedures set forth in 40 CFR part 2. A second copy of such comments, with the CBI deleted, also must be submitted for inclusion in the public record. EPA may publicly disclose comments not marked confidential without prior notification.

A record has been established for this notice under docket number [OPP–64040]. A public version of this record, including printed, paper versions of electronic comments, which does not include any information claimed as CBI, is available for inspection 8:30 a.m. to 4 p.m., Monday through Friday, excluding legal holidays. The public record is available for inspection in Rm. 119 of the Public Information and Records Integrity Branch, Information Resources and Services Division (7502C), Office of Pesticide Programs, Environmental Protection Agency, Crystal Mall #2, 1921 Jefferson Davis Highway, Arlington VA. Electronic comments can be sent directly to EPA at:

opp–docket@epamail.epa.gov.

Electronic comments must be submitted as an ASCII file avoiding the use of special characters and any form of encryption. The official version, as described above, will be kept in paper form. Accordingly, EPA will transfer all comments received electronically into printed, paper form as they are received electronically and will place paper copies in the official record, which will also include all comments submitted directly in writing. The official record is the paper record maintained at the address in the ''ADDRESSES'' at the beginning of this notice.

List of Subjects

Environmental protection, Agricultural commodities, Pesticides and pests.

Dated: February 16, 1999.

Jack E. Housenger,

Acting Director, Special Review and Reregistration Division, Office of Pesticide Programs.

[FR Doc. 99–5240 Filed 3–2–99; 8:45 am]

BILLING CODE 6560–50–F

ENVIRONMENTAL PROTECTION AGENCY

[OPP–50853; FRL–6064–8]

Issuance of an Experimental Use Permit

AGENCY: Environmental Protection Agency (EPA).

ACTION: Notice.

SUMMARY: EPA has granted an experimental use permit to the following applicant. The permit is in accordance with, and subject to, the provisions of 40 CFR part l72, which defines EPA procedures with respect to the use of pesticides for experimental use purposes.

FOR FURTHER INFORMATION CONTACT: By mail: Ann Sibold, Registration Division (7505C), Office of Pesticide Programs, Environmental Protection Agency, 401 M St., SW., Washington, DC 20460. Office location, telephone number, and e-mail address: 1921 Jefferson Davis Highway, Rm. 212, CM #2, Arlington, VA, 703–305–6502, e-mail: sibold.ann@epa.gov.

SUPPLEMENTARY INFORMATION: EPA has issued the following experimental use permit:

352–EUP–165. Issuance. E.I. du Pont de Nemours and Company, Dupont Agricultural Products, Walker's Mill, Barley Mill Plaza, P.O. Box 80038, Wilmington, DE 19880–0038. This experimental use permit allows the use of 40.88 pounds of the insecticide Avaunt™ WG on 100 acres of apples, cole crops, lettuce, and tomatoes on a crop destruct basis to evaluate the control of various insect pests. The program is authorized only in the States of Arizona, California, Florida, Maryland, Michigan, New York, North Carolina, Ohio, Pennsylvania, South Carolina, Texas, Virginia, Washington, West Virginia, and Wisconsin. The experimental use permit is effective from February 9, 1999 to February 9, 2000. This permit is issued with the limitation that all treated crops will be destroyed or used for research purposes only.

Persons wishing to review this experimental use permit are referred to the designated contact person. Inquires concerning this permit should be directed to the person cited above. It is suggested that interested persons call before visiting the EPA office, so that the appropriate file may be made available for inspection purposes from 8 a.m. to 4 p.m., Monday through Friday, excluding legal holidays.

Authority: 7 U.S.C. 136.

List of Subjects

Environmental protection, Experimental use permits.

Dated: February 19, 1999.

James Jones,

Director, Registration Division, Office of Pesticide Programs.

[FR Doc. 99–4972 Filed 3–2–99; 8:45 am]

BILLING CODE 6560–50–F

ENVIRONMENTAL PROTECTION AGENCY

[OPP–50854; FRL–6065–7]

Extension of an Experimental Use Permit

AGENCY: Environmental Protection Agency (EPA).

ACTION: Notice.

SUMMARY: EPA has granted an experimental use permit to the following applicant. The permit is in accordance with, and subject to, the provisions of 40 CFR part l72, which defines EPA procedures with respect to the use of pesticides for experimental use purposes.

FOR FURTHER INFORMATION CONTACT: By mail: Ann Sibold, Registration Division (7505C), Office of Pesticide Programs, Environmental Protection Agency, 401 M St., SW., Washington, DC 20460. Office location, telephone number, and e-mail address: 1921 Jefferson Davis Highway, Rm. 212, CM #2, Arlington, VA, 703–305–6502, e-mail: sibold.ann@epa.gov.

SUPPLEMENTARY INFORMATION: EPA has issued the following experimental use permit:

264–EUP–117. Extension. Rhone-Poulenc AG Company, P.O. Box 12014, 2 T.W. Alexander Drive, Research Triangle Park, NC 27709. This experimental use permit allows the use of 75 pounds of the insecticide Regent 2.5 EC Insecticide on 250 acres of cotton on a crop destruct basis to evaluate the control of key pests of cotton. The program is authorized only in the States of Alabama, Arizona, Arkansas, California, Louisiana, Mississippi, Tennessee, and Texas. The experimental use permit was previously effective from April 24, 1998 to April 24, 1999; the experimental use permit is now effective from April 24, 1999 to April 24, 2000. This permit is issued with the limitation that all treated crops will be destroyed or used for research purposes only.

Persons wishing to review this experimental use permit are referred to the designated contact person. Inquires concerning this permit should be directed to the person cited above. It is suggested that interested persons call before visiting the EPA office, so that the appropriate file may be made available for inspection purposes from 8 a.m. to 4 p.m., Monday through Friday, excluding legal holidays.

Authority: 7 U.S.C. 136.

List of Subjects

Environmental protection, Experimental use permits.

Dated: February 22, 1999.

James Jones,

Director, Registration Division, Office of Pesticide Programs.

[FR Doc. 99–5242 Filed 3–2–99; 8:45 am]

BILLING CODE 6560–50–F

FEDERAL COMMUNICATIONS COMMISSION

[CC Docket No. 92–237; DA 99–415]

Next Meeting of the North American Numbering Council

AGENCY: Federal Communications Commission.

ACTION: Notice.

SUMMARY: On February 26, 1999, the Commission released a public notice announcing the March 16–17, 1999, meeting and agenda of the North American Numbering Council (NANC).

FOR FURTHER INFORMATION CONTACT: Linda Simms at (202) 418–2330 or via the Internet at lsimms@fcc.gov or Jeannie Grimes at (202) 418–2313 or via the Internet at jgrimes@fcc.gov. The address is: Network Services Division, Common Carrier Bureau, Federal Communications Commission, 2000 M Street, NW, Suite 235, Washington, DC 20554. The fax number is: (202) 418–7314. The TTY number is: (202) 418–0484.

SUPPLEMENTARY INFORMATION: Released: February 26, 1999.

The next meeting of the North American Numbering Council (NANC) will be held on Tuesday, March 16, from 8:30 a.m., until 5:00 p.m., and on Wednesday, March 17, from 8:30 a.m., until 12 noon. This meeting will be held at the Federal Communications Commission, 445 Twelfth Street, SW, Room TW-C305, Washington, DC 20554. This meeting is open to the members of the general public. The FCC will attempt to accommodate as many participants as possible. Participation on the conference call is limited. The public may submit written statements to the NANC, which must be received two business days before the meeting. In addition, oral statements at the meeting by parties or entities not represented on the NANC will be permitted to the extent time permits. Such statements will be limited to five minutes in length by any one party or entity, and requests to make an oral statement must be received two business days before the meeting. Requests to make an oral statement or provide written comments to the NANC should be sent to Jeannie Grimes at the address under **FOR FURTHER INFORMATION CONTACT,** stated above.

Proposed Agenda

Tuesday, March 16, 1999

1. Approval of meeting minutes.
2. Local Number Portability Administration (LNPA) Working Group Report. Response to question '' * * * if

thousand block pooling was ordered by the Commission, when is the earliest date that CRMS carriers could participate?'' Revisit Y2K quiet period recommendation regarding NPAC/SMS software changes.

3. Industry Numbering Committee (INC) Report. Progress update on 500/900 portability issue.

4. Numbering Resource Optimization (NRO) Working Group Report.

5. Cost Recovery Working Group Report: NBANC Board Report, NANPA Billing and Collection Agent activities.

6. Issue Management Group Report: NANC will reach resolution on NPA relief planning issue regarding California's requirement for court reporters at public meetings. Position statements regarding the court reporter issue will be considered. This item has been scheduled for discussion at 1:30 p.m.

7. Lockheed Martin CIS Petition Issue Management Group (IMG) Report: NANC will review IMG draft recommendation pursuant to directive in public notice DA 99–347 for final recommendation to be forwarded to the FCC by COB March 17, 1999.

Wednesday, March 17, 1999

8. North American Numbering Plan Administration (NANPA) Oversight Working Group Report: Progress update on NANPA performance evaluation.

9. Lockheed Martin update on NANP exhaust model: Ad hoc group and Lockheed Martin will provide progress report.

10. Steering Group Report: Progress report on Ad Hoc NANPA 1K administration review of Lockheed Martin response to the thousand block pooling administration requirements document.

11. Other business.

Federal Communications Commission.

Blaise A. Scinto,

Deputy Chief, Network Services Division, Common Carrier Bureau.

[FR Doc. 99–5345 Filed 3–2–99; 8:45 am]

BILLING CODE 6712–01–P

FEDERAL ELECTION COMMISSION

Sunshine Act Meeting

AGENCY: Federal Election Commission.

DATE & TIME: Wednesday, March 10, 1999 at 10:00 a.m.

PLACE: 999 E Street, N.W., Washington, D.C.

STATUS: This meeting will be closed to the public.

ITEMS TO BE DISCUSSED:

Compliance matters pursuant to 2 U.S.C. § 437g.

Audits conducted pursuant to 2 U.S.C. § 437g., § 438(b), and Title 26, U.S.C.

Matters concerning participation in civil actions or proceedings or arbitration.

Internal personnel rules and procedures or matters affecting a particular employee.

DATE & TIME: Thursday, March 11, 1999 at 10:00 a.m.

PLACE: 999 E Street, N.W., Washington, D.C. (Ninth Floor).

STATUS: This meeting will be open to the public.

ITEMS TO BE DISCUSSED:

Correction and Approval of Minutes.

Report of the Audit Division on Clinton/Gore Primary Committee, Inc.

Report of the Audit Division on Clinton/Gore '96 General Committee, Inc. and Clinton/Gore '96 General Election Legal and Accounting Compliance Fund.

Report of the Audit Division on the Dole for President Committee, Inc. (Primary).

Report of the Audit Division on the Dole/Kemp '96 and Dole/Kemp Compliance Committee, Inc. (General).

Legislative Recommendations, 1999.

Administrative Matters.

PERSON TO CONTACT FOR INFORMATION: Mr. Ron Harris, Press Officer, Telephone: (202) 694–1220.

Marjorie W. Emmons,

Secretary of the Commission.

[FR Doc. 99–5399 Filed 3–1–99; 2:48 pm]

BILLING CODE 6715–01–M

FEDERAL RESERVE SYSTEM

Change in Bank Control Notices; Acquisitions of Shares of Banks or Bank Holding Companies

The notificants listed below have applied under the Change in Bank Control Act (12 U.S.C. 1817(j)) and § 225.41 of the Board's Regulation Y (12 CFR 225.41) to acquire a bank or bank holding company. The factors that are considered in acting on the notices are set forth in paragraph 7 of the Act (12 U.S.C. 1817(j)(7)).

The notices are available for immediate inspection at the Federal Reserve Bank indicated. The notices also will be available for inspection at the offices of the Board of Governors. Interested persons may express their views in writing to the Reserve Bank indicated for that notice or to the offices of the Board of Governors. Comments must be received not later than March 17, 1999.

A. Federal Reserve Bank of Kansas City (D. Michael Manies, Assistant Vice President) 925 Grand Avenue, Kansas City, Missouri 64198-0001:

1. Byron K. and Sandra A. Moffett, both of Larned, Kansas; to acquire voting shares of Pawnee Bancshares, Inc., Larned, Kansas, and thereby indirectly acquire voting shares of First National Bank & Trust Company in Larned, Larned, Kansas.

Board of Governors of the Federal Reserve System, February 25, 1999.

Robert deV. Frierson,

Associate Secretary of the Board.

[FR Doc. 99–5194 Filed 3–2–99; 8:45 am]

BILLING CODE 6210–01–F

FEDERAL RESERVE SYSTEM

Formations of, Acquisitions by, and Mergers of Bank Holding Companies

The companies listed in this notice have applied to the Board for approval, pursuant to the Bank Holding Company Act of 1956 (12 U.S.C. 1841 *et seq.*) (BHC Act), Regulation Y (12 CFR Part 225), and all other applicable statutes and regulations to become a bank holding company and/or to acquire the assets or the ownership of, control of, or the power to vote shares of a bank or bank holding company and all of the banks and nonbanking companies owned by the bank holding company, including the companies listed below.

The applications listed below, as well as other related filings required by the Board, are available for immediate inspection at the Federal Reserve Bank indicated. The application also will be available for inspection at the offices of the Board of Governors. Interested persons may express their views in writing on the standards enumerated in the BHC Act (12 U.S.C. 1842(c)). If the proposal also involves the acquisition of a nonbanking company, the review also includes whether the acquisition of the nonbanking company complies with the standards in section 4 of the BHC Act. Unless otherwise noted, nonbanking activities will be conducted throughout the United States.

Unless otherwise noted, comments regarding each of these applications must be received at the Reserve Bank indicated or the offices of the Board of Governors not later than March 26, 1999.

A. Federal Reserve Bank of New York (Betsy Buttrill White, Senior Vice President) 33 Liberty Street, New York, New York 10045-0001:

1. Letchworth Independent Bancshares Corporation, Castile, New York; to acquire 61 percent of the voting shares of The Mahopac National Bank, Mahopac, New York.

B. Federal Reserve Bank of St. Louis (Randall C. Sumner, Vice President) 411 Locust Street, St. Louis, Missouri 63102-2034:

1. Union Financial Group, Ltd., Swansea, Illinois; to acquire 100 percent of the voting shares of Union Bank of Illinois, Swansea, Illinois (in organization).

C. Federal Reserve Bank of Minneapolis (JoAnne F. Lewellen, Assistant Vice President) 90 Hennepin Avenue, P.O. Box 291, Minneapolis, Minnesota 55480-0291:

1. Piesco, Inc., Springfield, Minnesota; to become a bank holding company by acquiring 100 percent of the voting shares of Norwood Bancshares, Inc., Norwood Young America, Minnesota, and thereby indirectly acquire Citizens State Bank of Norwood, Norwood Young America, Minnesota; Springfield Investment Company, Springfield, Minnesota, and Farmers and Merchants State Bank of Springfield, Springfield, Minnesota.

Board of Governors of the Federal Reserve System, February 25, 1999.

Robert deV. Frierson,

Associate Secretary of the Board.

[FR Doc. 99–5195 Filed 3–2–99; 8:45 am]

BILLING CODE 6210–01–F

FEDERAL RESERVE SYSTEM

Notice of Proposals to Engage in Permissible Nonbanking Activities or to Acquire Companies that are Engaged in Permissible Nonbanking Activities

The companies listed in this notice have given notice under section 4 of the Bank Holding Company Act (12 U.S.C. 1843) (BHC Act) and Regulation Y, (12 CFR Part 225) to engage *de novo*, or to acquire or control voting securities or assets of a company, including the companies listed below, that engages either directly or through a subsidiary or other company, in a nonbanking activity that is listed in § 225.28 of Regulation Y (12 CFR 225.28) or that the Board has determined by Order to be closely related to banking and permissible for bank holding companies. Unless otherwise noted, these activities will be conducted throughout the United States.

Each notice is available for inspection at the Federal Reserve Bank indicated. The notice also will be available for inspection at the offices of the Board of Governors. Interested persons may express their views in writing on the question whether the proposal complies with the standards of section 4 of the BHC Act.

Unless otherwise noted, comments regarding the applications must be received at the Reserve Bank indicated or the offices of the Board of Governors not later than March 26, 1999.

A. Federal Reserve Bank of San Francisco (Maria Villanueva, Manager of Analytical Support, Consumer Regulation Group) 101 Market Street, San Francisco, California 94105-1579:

1. Pedcor Bancorp, Indianapolis, Indiana; to acquire 49.9 percent of the voting shares of Fidelity Federal Bancorp, Evansville, Indiana, and thereby indirectly acquire United Fidelity Bank, F.S.B., Evansville, Indiana, and thereby engage in owning and operating a savings association, pursuant to § 225.28(b)(4)(ii) of Regulation Y.

Board of Governors of the Federal Reserve System, February 25, 1999.

Robert deV. Frierson,

Associate Secretary of the Board.

[FR Doc. 99–5196 Filed 3–2–99; 8:45 am]

BILLING CODE 6210–01–F

FEDERAL RESERVE SYSTEM

Sunshine Act Meeting

AGENCY HOLDING THE MEETING: Board of Governors of the Federal Reserve System.

TIME AND DATE: 11:00 a.m., Monday, March 8, 1999.

PLACE: Marriner S. Eccles Federal Reserve Board Building, 20th and C Streets, N.W., Washington, D.C. 20551.

STATUS: Closed:

MATTERS TO BE CONSIDERED:

1. Personnel actions (appointments, promotions, assignments, reassignments, and salary actions) involving individual Reserve System employees.

2. Any items carried forward from a previously announced meeting.

CONTACT PERSON FOR MORE INFORMATION: Lynn S. Fox, Assistant to the Board; 202–452–3204.

SUPPLEMENTARY INFORMATION: You may call 202–452–3206 beginning at approximately 5 p.m. two business days before the meting for a recorded announcement of bank and bank holding company applications scheduled for the meeting; or you may contact the Board's Web site at http://www.federalreserve.gov for an electronic announcement that not only lists applications, but also indicates procedural and other information about the meeting.

Dated: February 25, 1999.

Robert deV. Frierson,

Associate Secretary of the Board.

[FR Doc. 99–5279 Filed 2–26–99; 4:19 pm]

BILLING CODE 6210–01–P

DEPARTMENT OF HEALTH AND HUMAN SERVICES

Food and Drug Administration

[Docket No. 99F–0299]

Alcide Corp. Inc.; Filing of Food Additive Petition

AGENCY: Food and Drug Administration, HHS.

ACTION: Notice.

SUMMARY: The Food and Drug Administration (FDA) is announcing that Alcide Corp. has filed a petition proposing that the food additive regulations be amended to provide for the safe use of aqueous solutions of acidified sodium chlorite as an antimicrobial agent on raw agricultural commodities.

DATES: Written comments on the petitioner's environmental assessment by April 2, 1999.

ADDRESSES: Submit written comments to the Dockets Management Branch (HFA–305), Food and Drug Administration, 5630 Fishers Lane, rm. 1061, Rockville, MD 20852.

FOR FURTHER INFORMATION CONTACT: Robert L. Martin, Center for Food Safety and Applied Nutrition (HFS–215), Food and Drug Administration, 200 C St. SW., Washington, DC 20204–0001, 202–418–3074.

SUPPLEMENTARY INFORMATION: Under the Federal Food, Drug, and Cosmetic Act (sec. 409(b)(5) (21 U.S.C. 348(b)(5))), notice is given that a petition (FAP 9A4648) has been filed by Alcide Corp., 8561 154th Ave. NE., Redmond, WA 98052. The petition proposes to amend the food additive regulations in 21 CFR 173.325 to provide for the safe use of aqueous solutions of acidified sodium chlorite as an antimicrobial agent on raw agricultural commodities.

The potential environmental impact of this action is being reviewed. To encourage public participation consistent with regulations issued under the National Environmental Policy Act (40 CFR 1501.4(b)), the agency is placing the environmental assessment submitted with the petition that is the subject of this notice on public display at the Dockets Management Branch (address above) for public review and comment. Interested persons may, on or before April 2, 1999, submit to the

Dockets Management Branch (address above) written comments. Two copies of any comments are to be submitted, except that individuals may submit one copy. Comments are to be identified with the docket number found in brackets in the heading of this document. Received comments may be seen in the office above between 9 a.m. and 4 p.m., Monday through Friday. FDA will also place on public display any amendments to, or comments on, the petitioner's environmental assessment without further announcement in the **Federal Register**. If, based on its review, the agency finds that an environmental impact statement is not required and this petition results in a regulation, the notice of availability of the agency's finding of no significant impact and the evidence supporting that finding will be published with the regulation in the **Federal Register** in accordance with 21 CFR 25.40(c).

Dated: February 19, 1999.

Laura M. Tarantino,

Acting Director, Office of Premarket Approval, Center for Food Safety and Applied Nutrition.

[FR Doc. 99–5131 Filed 3–2–99; 8:45 am]

BILLING CODE 4160–01–F

DEPARTMENT OF HEALTH AND HUMAN SERVICES

Food and Drug Administration

[Docket No. 98E–0796]

Determination of Regulatory Review Period for Purposes of Patent Extension; LumenHance®

AGENCY: Food and Drug Administration, HHS.

ACTION: Notice.

SUMMARY: The Food and Drug Administration (FDA) has determined the regulatory review period for LumenHance® and is publishing this notice of that determination as required by law. FDA has made the determination because of the submission of an application to the Commissioner of Patents and Trademarks, Department of Commerce, for the extension of a patent which claims that human drug product.

ADDRESSES: Written comments and petitions should be directed to the Dockets Management Branch (HFA–305), Food and Drug Administration, 5630 Fishers Lane, rm. 1061, Rockville, MD 20852.

FOR FURTHER INFORMATION CONTACT: Brian J. Malkin, Office of Health Affairs (HFY–20), Food and Drug Administration, 5600 Fishers Lane, Rockville, MD 20857, 301–827–6620.

SUPPLEMENTARY INFORMATION: The Drug Price Competition and Patent Term Restoration Act of 1984 (Pub. L. 98–417) and the Generic Animal Drug and Patent Term Restoration Act (Pub. L. 100670) generally provide that a patent may be extended for a period of up to 5 years so long as the patented item (human drug product, animal drug product, medical device, food additive, or color additive) was subject to regulatory review by FDA before the item was marketed. Under these acts, a product's regulatory review period forms the basis for determining the amount of extension an applicant may receive.

A regulatory review period consists of two periods of time: A testing phase and an approval phase. For human drug products, the testing phase begins when the exemption to permit the clinical investigations of the drug becomes effective and runs until the approval phase begins. The approval phase starts with the initial submission of an application to market the human drug product and continues until FDA grants permission to market the drug product. Although only a portion of a regulatory review period may count toward the actual amount of extension that the Commissioner of Patents and Trademarks may award (for example, half the testing phase must be subtracted as well as any time that may have occurred before the patent was issued), FDA's determination of the length of a regulatory review period for a human drug product will include all of the testing phase and approval phase as specified in 35 U.S.C. 156(g)(1)(B).

FDA recently approved for marketing the human drug product LumenHance® (manganese chloride USP). LumenHance® is indicated for use as a magnetic resonance imaging (MRI) contrast media, to enhance the delineation of the upper gastrointestinal tract to distinguish it from organs and tissues that are adjacent to the upper regions of the gastrointestinal tract. Subsequent to this approval, the Patent and Trademark Office received a patent term restoration application for LumenHance® (U.S. Patent No. 5,368,840) from Bracco Diagnostics Inc., and the Patent and Trademark Office requested FDA's assistance in determining this patent's eligibility for patent term restoration. In a letter dated December 14, 1998, FDA advised the Patent and Trademark Office that this human drug product had undergone a regulatory review period and that the approval of LumenHance® represented the first permitted commercial marketing or use of the product. Shortly thereafter, the Patent and Trademark Office requested that FDA determine the product's regulatory review period.

FDA has determined that the applicable regulatory review period for LumenHance® is 1,796 days. Of this time, 1,067 days occurred during the testing phase of the regulatory review period, while 729 days occurred during the approval phase. These periods of time were derived from the following dates:

1. *The date an exemption under section 505 of the Federal Food, Drug, and Cosmetic Act (the act) (21 U.S.C. 355) became effective*: The applicant claims January 18, 1993, as the date the investigational new drug application (IND) became effective. However, FDA records indicate that the IND effective date was January 20, 1993, which was 30 days after FDA receipt of the IND.

2. *The date the application was initially submitted with respect to the human drug product under section 505 of the act*: December 22, 1995. The applicant claims December 20, 1995, as the date the new drug application (NDA) for LumenHance® (NDA 20–686) was initially submitted. However, FDA records indicate that NDA 20–686 was submitted on December 22, 1995.

3. *The date the application was approved*: December 19, 1997. FDA has verified the applicant's claim that NDA 20–686 was approved on December 19, 1997.

This determination of the regulatory review period establishes the maximum potential length of a patent extension. However, the U.S. Patent and Trademark Office applies several statutory limitations in its calculations of the actual period for patent extension. In its application for patent extension, this applicant seeks 20 days of patent term extension.

Anyone with knowledge that any of the dates as published is incorrect may, on or before May 3, 1999, submit to the Dockets Management Branch (address above) written comments and ask for a redetermination. Furthermore, any interested person may petition FDA, on or before August 30, 1999, for a determination regarding whether the applicant for extension acted with due diligence during the regulatory review period. To meet its burden, the petition must contain sufficient facts to merit an FDA investigation. (See H. Rept. 857, part 1, 98th Cong., 2d sess., pp. 41–42, 1984.) Petitions should be in the format specified in 21 CFR 10.30.

Comments and petitions should be submitted to the Dockets Management Branch (address above) in three copies (except that individuals may submit

single copies) and identified with the docket number found in brackets in the heading of this document. Comments and petitions may be seen in the Dockets Management Branch between 9 a.m. and 4 p.m., Monday through Friday.

Dated: February 16, 1999.

Thomas J. McGinnis,

Deputy Associate Commissioner for Health Affairs.

[FR Doc. 99–5130 Filed 3–2–99; 8:45 am]

BILLING CODE 4160–01–F

DEPARTMENT OF HEALTH AND HUMAN SERVICES

Food and Drug Administration

[Docket No. 99F–0298]

Asahi Denka Kogyo K.K.; Filing of Food Additive Petition

AGENCY: Food and Drug Administration, HHS.

ACTION: Notice.

SUMMARY: The Food and Drug Administration (FDA) is announcing that Asahi Denka Kogyo K.K. has filed a petition proposing that the food additive regulations be amended to provide for the safe use of aluminum, hydroxybis[2,4,8,10-tetrakis(1,1-dimethylethyl)-6-hydroxy-12H-dibenzo[d,g][1,3,2]dioxaphosphocin 6-oxidato]- as a clarifying agent for polypropylene and polypropylene copolymers intended for use in contact with food.

FOR FURTHER INFORMATION CONTACT: Hortense S. Macon, Center for Food Safety and Applied Nutrition (HFS–206), Food and Drug Administration, 200 C St. SW., Washington, DC 20204, 202–418–3086.

SUPPLEMENTARY INFORMATION: Under the Federal Food, Drug, and Cosmetic Act (sec. 409(b)(5) (21 U.S.C. 348(b)(5)), notice is given that a food additive petition (FAP 9B4638) has been filed by Asahi Denka Kogyo K.K., 2–13, Shirahata 5-chome, Urawa City Saitama 336, Japan. The petition proposes to amend the food additive regulations in § 178.3295 *Clarifying agents for polymers* (21 CFR 178.3295) to provide for the safe use of aluminum, hydroxybis[2,4,8,10-tetrakis(1,1-dimethylethyl)-6-hydroxy-12H-dibenzo[d,g][1,3,2]dioxaphosphocin 6-oxidato]- as a clarifying agent for polypropylene and polypropylene copolymers intended for use in contact with food.

The agency has determined under 21 CFR 25.32(i) that this action is of a type that does not individually or cumulatively have a significant effect on the human environment. Therefore, neither an environmental assessment nor an environmental impact statement is required.

Dated: February 19, 1999.

Laura M. Tarantino,

Acting Director, Office of Premarket Approval, Center for Food Safety and Applied Nutrition.

[FR Doc. 99–5218 Filed 3–2–99; 8:45 am]

BILLING CODE 4160–01–F

DEPARTMENT OF HEALTH AND HUMAN SERVICES

Food and Drug Administration

[Docket No. 98E–0843]

Determination of Regulatory Review Period for Purposes of Patent Extension; Singulair®

AGENCY: Food and Drug Administration, HHS.

ACTION: Notice.

SUMMARY: The Food and Drug Administration (FDA) has determined the regulatory review period for Singulair® and is publishing this notice of that determination as required by law. FDA has made the determination because of the submission of an application to the Commissioner of Patents and Trademarks, Department of Commerce, for the extension of a patent which claims that human drug product.

ADDRESSES: Written comments and petitions should be directed to the Dockets Management Branch (HFA–305), Food and Drug Administration, 5630 Fishers Lane, rm. 1061, Rockville, MD 20852.

FOR FURTHER INFORMATION CONTACT: Brian J. Malkin, Office of Health Affairs (HFY–20), Food and Drug Administration, 5600 Fishers Lane, Rockville, MD 20857, 301–827–6620.

SUPPLEMENTARY INFORMATION: The Drug Price Competition and Patent Term Restoration Act of 1984 (Pub. L. 98–417) and the Generic Animal Drug and Patent Term Restoration Act (Pub. L. 100–670) generally provide that a patent may be extended for a period of up to 5 years so long as the patented item (human drug product, animal drug product, medical device, food additive, or color additive) was subject to regulatory review by FDA before the item was marketed. Under these acts, a product's regulatory review period forms the basis for determining the amount of extension an applicant may receive.

A regulatory review period consists of two periods of time: A testing phase and an approval phase. For human drug products, the testing phase begins when the exemption to permit the clinical investigations of the drug becomes effective and runs until the approval phase begins. The approval phase starts with the initial submission of an application to market the human drug product and continues until FDA grants permission to market the drug product. Although only a portion of a regulatory review period may count toward the actual amount of extension that the Commissioner of Patents and Trademarks may award (for example, half the testing phase must be subtracted as well as any time that may have occurred before the patent was issued), FDA's determination of the length of a regulatory review period for a human drug product will include all of the testing phase and approval phase as specified in 35 U.S.C. 156(g)(1)(B).

FDA recently approved for marketing the human drug product Singulair® (montelukast sodium). Singulair® is indicated for the prophylaxis and chronic treatment of asthma in adults and pediatric patients 6 years of age and older. Subsequent to this approval, the Patent and Trademark Office received a patent term restoration application for Singulair® (U.S. Patent No. 5,565,473) from Merck & Co., and the Patent and Trademark Office requested FDA's assistance in determining this patent's eligibility for patent term restoration. In a letter dated December 16, 1998, FDA advised the Patent and Trademark Office that this human drug product had undergone a regulatory review period and that the approval of Singulair® represented the first permitted commercial marketing or use of the product. Shortly thereafter, the Patent and Trademark Office requested that FDA determine the product's regulatory review period.

FDA has determined that the applicable regulatory review period for Singulair is 2,090 days. Of this time, 1,725 days occurred during the testing phase of the regulatory review period, while 365 days occurred during the approval phase. These periods of time were derived from the following dates:

1. *The date an exemption under section 505 of the Federal Food, Drug, and Cosmetic Act (the act) (21 U.S.C. 355) became effective*: June 3, 1992. FDA has verified the applicant's claim that the date the investigational new drug application became effective was on June 3, 1992.

2. *The date the application was initially submitted with respect to the human drug product under section 505*

of the act: February 21, 1997. FDA has verified the applicant's claim that the new drug application (NDA) for Singulair® (NDA 20–829) was initially submitted on February 21, 1997.

3. *The date the application was approved*: February 20, 1998. FDA has verified the applicant's claim that NDA 20–829 was approved on February 20, 1998.

This determination of the regulatory review period establishes the maximum potential length of a patent extension. However, the U.S. Patent and Trademark Office applies several statutory limitations in its calculations of the actual period for patent extension. In its application for patent extension, this applicant seeks 428 days of patent term extension.

Anyone with knowledge that any of the dates as published is incorrect may, on or before May 3, 1999, submit to the Dockets Management Branch (address above) written comments and ask for a redetermination. Furthermore, any interested person may petition FDA, on or before August 30, 1999 for a determination regarding whether the applicant for extension acted with due diligence during the regulatory review period. To meet its burden, the petition must contain sufficient facts to merit an FDA investigation. (See H. Rept. 857, part 1, 98th Cong., 2d sess., pp. 41–42, 1984.) Petitions should be in the format specified in 21 CFR 10.30.

Comments and petitions should be submitted to the Dockets Management Branch (address above) in three copies (except that individuals may submit single copies) and identified with the docket number found in brackets in the heading of this document. Comments and petitions may be seen in the Dockets Management Branch between 9 a.m. and 4 p.m., Monday through Friday.

Dated: February 16, 1999.

Thomas J. McGinnis,

Deputy Associate Commissioner for Health Affairs.

[FR Doc. 99–5132 Filed 3–2–99; 8:45 am]

BILLING CODE 4160–01–F

DEPARTMENT OF HEALTH AND HUMAN SERVICES

Health Care Financing Administration

[Document Identifier: HCFA–484]

Agency Information Collection Activities: Proposed Collection; Comment Request

AGENCY: Health Care Financing Administration.

In compliance with the requirement of section 3506(c)(2)(A) of the Paperwork Reduction Act of 1995, the Health Care Financing Administration (HCFA), Department of Health and Human Services, is publishing the following summary of proposed collections for public comment. Interested persons are invited to send comments regarding this burden estimate or any other aspect of this collection of information, including any of the following subjects: (1) The necessity and utility of the proposed information collection for the proper performance of the agency's functions; (2) the accuracy of the estimated burden; (3) ways to enhance the quality, utility, and clarity of the information to be collected; and (4) the use of automated collection techniques or other forms of information technology to minimize the information collection burden.

Type of Information Collection Request: Extension of a currently approved collection;

Title of Information Collection: Attending Physician's Certification of Medical Necessity for Home Oxygen Therapy and Supporting Regulations in 42 CFR 410.38 and 424.5;

Form No.: HCFA–484 (OMB# 0938–0534);

Use: To determine if oxygen is reasonable and necessary pursuant to Medicare Statute, Medicare claims for home oxygen therapy must be supported by the treating physician's statement and other information including estimate length of need (# of months), diagnosis codes (ICD–9) and:

1. Results and date of the most recent arterial blood gas PO^2 and/or oxygen saturation tests.

2. The most recent arterial blood gas PO^2 and/or oxygen saturation test performed EITHER with the patient in a chronic stable state as an outpatient, OR within two days prior to discharge from an inpatient facility to home.

3. The most recent arterial blood gas PO^2 and/or oxygen saturation test performed at rest, during exercise, or during sleep.

4. Name and address of the physician/provider performing the most recent arterial blood gas PO^2 and/or oxygen saturation test.

5. If ordering portable oxygen, information regarding the patient's mobility within the home.

6. Identification of the highest oxygen flow rate (in liters per minute) prescribed.

7. If the prescribed liters per minute (LPM), as identified in item 6, are greater than 4 LPM, provide the results and date of the most recent arterial blood gas PO^2 and/or oxygen saturation test taken on 4 LPM.

If the $PO^2 = 56–59$, or the oxygen saturation = 89%, then evidence of the beneficiary meeting at least one of the following criteria must be provided.

8. The patient having dependent edema due to congestive heart failure.

9. The patient having cor pulmonale or pulmonary hypertension, as documented by pulmonale on an EKG or by an echocardiogram, gated blood pool scan or direct pulmonary artery pressure measurement.

10. The patient having a hematocrit greater than 56%.

Form HCFA–484 obtains all pertinent information and promotes national consistency in coverage determinations;

Frequency: Other (as needed);

Affected Public: Business or other for-profit, and Federal Government;

Number of Respondents: 500,000;

Total Annual Responses: 500,000;

Total Annual Hours: 50,000.

To obtain copies of the supporting statement and any related forms for the proposed paperwork collections referenced above, access HCFA's Web Site address at http://www.hcfa.gov/regs/prdact95.htm, or E-mail your request, including your address, phone number, OMB number, and HCFA document identifier, to Paperwork@hcfa.gov, or call the Reports Clearance Office on (410) 786–1326. Written comments and recommendations for the proposed information collections must be mailed within 60 days of this notice directly to the HCFA Paperwork Clearance Officer designated at the following address: HCFA, Office of Information Services, Security and Standards Group, Division of HCFA Enterprise Standards, Attention: Dawn Willinghan, Room N2–14–26, 7500 Security Boulevard, Baltimore, Maryland 21244–1850.

Dated: February 23, 1999.

John P. Burke III,

HCFA Reports Clearance Officer, HCFA Office of Information Services, Security and Standards Group, Division of HCFA Enterprise Standards.

[FR Doc. 99–5220 Filed 3–2–99; 8:45 am]

BILLING CODE 4120–03–P

DEPARTMENT OF HEALTH AND HUMAN SERVICES

Health Care Financing Administration

[Document Identifier: HCFA–0301, HCFA–2567, and HCFA–R–0275]

Agency Information Collection Activities: Proposed Collection; Comment Request

AGENCY: Health Care Financing Administration, HHS.

In compliance with the requirement of section 3506(c)(2)(A) of the Paperwork Reduction Act of 1995, the Health Care Financing Administration (HCFA), Department of Health and Human Services, is publishing the following summary of proposed collections for public comment. Interested persons are invited to send comments regarding this burden estimate or any other aspect of this collection of information, including any of the following subjects: (1) The necessity and utility of the proposed information collection for the proper performance of the agency's functions; (2) the accuracy of the estimated burden; (3) ways to enhance the quality, utility, and clarity of the information to be collected; and (4) the use of automated collection techniques or other forms of information technology to minimize the information collection burden.

1. *Type of Information Collection Request:* Extension of a currently approved collection; *Title of Information Collection:* Certification of Medicaid Eligibility Quality Control (MEQC) Payment Error Rates and Supporting Regulations in 42 CFR 431.800 through 431.865; *Form No.:* HCFA–0301 (OMB# 0938–0246); *Use:* MEQC is operated by the State title XIX agency to monitor and improve the administration of its Medicaid system. The MEQC system is based on State reviews of Medicaid beneficiaries from the eligibility files. The reviews are used to assess beneficiary liability, if any, and to determine the amounts paid to provide Medicaid services for these cases.; *Frequency:* Semi-annually; *Affected Public:* State, Local or Tribal Government; *Number of Respondents:* 51; *Total Annual Responses:* 102; *Total Annual Hours:* 22,515.

2. *Type of Information Collection Request:* Extension of a currently approved collection; *Title of Information Collection:* Statement of Deficiencies and Plan of Correction and Supporting Regulations in 42 CFR 488.18, 488.26, and 488.28; *Form No.:* HCFA–2567 (OMB# 0938–0391); Use: This Paperwork package provides information regarding the form used by the Medicare, Medicaid, and the Clinical Laboratory Improvement Amendments (CLIA) programs to document a health care facility's compliance or noncompliance (deficiencies) with regard to the Medicare/Medicaid Conditions of Participation and Coverage, the requirements for participation for Skilled Nursing Facilities and Nursing Facilities, and for certification under CLIA. This form becomes the basis for both public disclosure of information and HCFA certification decisions (including termination or denial of participation).; *Frequency:* Biennially and Annually; *Affected Public:* Business or other for-profit, Not-for-profit institutions, Federal Government, and State, Local or Tribal Government; *Number of Respondents:* 60,000; *Total Annual Responses:* 60,000; *Total Annual Hours:* 120,000.

3. *Type of Information Collection Request:* New collection; *Title of Information Collection:* Peer Review Evaluation of Access to and Quality of Home Oxygen Equipment; *Form No.:* HCFA–R–0275 (OMB# 0938-new); *Use:* The Balanced Budget Act (BBA) of 1997 reduced payment allowances for home oxygen by 25 percent effective January 1, 1998 and an additional five percent effective January 1, 1999. As a result of these fee schedule reductions, the BBA requires a study be made of issues relating to home oxygen equipment. The study's primary objectives are: to evaluate any changes in access to, and quality of, home oxygen equipment provided to Medicare beneficiaries as a result of the fee schedule reduction; and describe current physician practices in ordering and prescribing home oxygen services.; *Frequency:* One time only; *Affected Public:* Individuals or households, Business or other for-profit, and Not-for-profit institutions; *Number of Respondents:* 2,500; *Total Annual Responses:* 2,500; *Total Annual Hours:* 787.

To obtain copies of the supporting statement and any related forms for the proposed paperwork collections referenced above, access HCFA's Web Site address at http://www.hcfa.gov/regs/prdact95.htm, or E-mail your request, including your address, phone number, OMB number, and HCFA document identifier, to Paperwork@hcfa.gov, or call the Reports Clearance Office on (410) 786–1326. Written comments and recommendations for the proposed information collections must be mailed within 60 days of this notice directly to the HCFA Paperwork Clearance Officer designated at the following address:

HCFA, Office of Information Services, Security and Standards Group, Division of HCFA Enterprise Standards, Attention: Louis Blank, Room N2–14–26, 7500 Security Boulevard, Baltimore, Maryland 21244–1850.

Dated: February 23, 1999.

John P. Burke III,

HCFA Reports Clearance Officer, HCFA Office of Information Services, Security and Standards Group, Division of HCFA Enterprise Standards.

[FR Doc. 99–5221 Filed 3–2–99; 8:45 am]

BILLING CODE 4120–03–P

DEPARTMENT OF HEALTH AND HUMAN SERVICES

National Institutes of Health

Center for Scientific Review; Notice of Closed Meetings

Pursuant to section 10(d) of the Federal Advisory Committee Act, as amended (5 U.S.C. Appendix 2, notice is hereby given of the following meetings.

The meetings will be closed to the public in accordance with the provisions set forth in sections 552b(c)(4) and 552(c)(6), Title 5 U.S.C., as amended. The grant applications and the discussions could disclose confidential trade secrets or commercial property such as patentable material, and personal information concerning individuals associated with the grant applications, the disclosure of which would constitute a clearly unwarranted invasion of personal privacy.

Name of Committee: Center for Scientific Review Special Emphasis Panel.

Date: March 2, 1999.

Time: 2:00 PM to 4:00 PM.

Agenda: To review and evaluate grant applications.

Place: NIH, Rockledge 2, Bethesda, MD 20892, (Telephone Conference Call).

Contact Person: Camilla E. Day, PHD, Scientific Review Administrator, Center for Scientific Review, National Institutes of Health, 6701 Rockledge Drive, Room 6152, MSC 7840, Bethesda, MD 20892, (301) 435–1037.

This notice is being published less than 15 days prior to the meeting due to the timing limitations imposed by the review and funding cycle.

Name of Committee: Infectious Diseases and Microbiology Initial Review Group Virology Study Section.

Date: March 4–5, 1999.

Time: 8:00 AM to 5:00 PM.

Agenda: To review and evaluate grant applications.

Place: Holiday Inn Georgetown, 2101 Wisconsin Avenue, NW., Washington, DC 20007.

Contact Person: Rita Anand, PHD, Scientific Review Administrator, Center for

Scientific Review, National Institutes of Health, 6701 Rockledge Drive, Room 4188, MSC 7808, Bethesda, MD 20892, (301) 435–1151.

This notice is being published less than 15 days prior to the meeting due to the timing limitations imposed by the review and funding cycle.

Name of Committee: Cell Development and Function Initial Review Group; Cell Development and Function 6.

Date: March 4–5, 1999.

Time: 8:00 AM to 6:00 PM.

Agenda: To review and evaluate grant applications.

Place: Latham Hotel Georgetown, 3000 M Street, NW., Washington, DC 20007.

Contact Person: Anthony Carter, PHD, Scientific Review Administrator, Center for Scientific Review, National Institutes of Health, 6701 Rockledge Drive, Room 5142, MSC 7840, Bethesda, MD 20892, (301) 435–1024.

This notice is being published less than 15 days prior to the meeting due to the timing limitations imposed by the review and funding cycle.

Name of Committee: Center for Scientific Review Special Emphasis Panel ZRG1–TMP–1.

Date: March 4–5, 1999.

Time: 8:00 AM to 4:00 PM.

Agenda: To review and evaluate grant applications.

Place: Bethesda Holiday Inn, 8120 Wisconsin Avenue, Bethesda, MD 20852.

Contact Person: Jean Hickman, PHD, Scientific Review Administrator, Center for Scientific Review, National Institutes of Health, 6701 Rockledge Drive, Room 4194, MSC 7808, Bethesda, MD 20892, (301) 435–1146.

This notice is being published less than 15 days prior to the meeting due to the timing limitations imposed by the review and funding cycle.

Name of Committee: Center for Scientific Review Special Emphasis Panel ZRG1–02–(01).

Date: March 4–5, 1999.

Time: 8:00 AM to 5:30 PM.

Agenda: To review and evaluate grant applications.

Place: Hyatt Regency Hotel, One Bethesda Metro Center, Bethesda, MD 20814.

Contact Person: Sami A. Mayyasi, PHD, Scientific Review Administrator, Center for Scientific Review, National Institutes of Health, 6701 Rockledge Drive, Room 5112, MSC 7852, Bethesda, MD 20892, (301) 435–1169.

This notice is being published less than 15 days prior to the meeting due to the timing limitations imposed by the review and funding cycle.

Name of Committee: Center for Scientific Review Special Emphasis Panel.

Date: March 4–5, 1999.

Time: 8:30 AM to 5:00 PM.

Agenda: To review and evaluate grant applications.

Place: Holiday Inn Chevy Chase, 5520 Wisconsin Avenue, Chevy Chase, MD 20815.

Contact Person: Cheri Wiggs, PHD, Scientific Review Administrator, Center for Scientific Review, National Institutes of Health, 6701 Rockledge Drive, Room 3180, MSC 7848, Bethesda, MD 20892, (301) 435–8367.

This notice is being published less than 15 days prior to the meeting due to the timing limitations imposed by the review and funding cycle.

Name of Committee: Center for Scientific Review Special Emphasis Panel.

Date: March 4–5, 1999.

Time: 8:30 AM to 5:00 PM.

Agenda: To review and evaluate grant applications.

Place: River Inn, 924 25th Street, NW, Washington, DC 20037.

Contact Person: Gloria B. Levin, PHD, Scientific Review Administrator, Center for Scientific Review, National Institutes of Health, 6701 Rockledge Drive, Room 3166, MSC 7848, Bethesda, MD 20892. (301) 435–0692.

This notice is being published less than 15 days prior to the meeting due to the timing limitations imposed by the review and funding cycle.

Name of Committee: Center for Scientific Review Special Emphasis Panel.

Date: March 5, 1999.

Time: 8:00 AM to 8:00 PM.

Agenda: To review and evaluate grant applications.

Place: Holiday Inn Chevy Chase, 5520 Wisconsin Avenue, Chevy Chase, MD 20815.

Contact Person: Marjam G. Behar, PHD, Scientific Review Administrator, Center for Scientific Review, National Institutes of Health, 6701 Rockledge Drive, Room 4178, MSC 7806, Bethesda, MD 20892, (301) 435–1180.

This notice is being published less than 15 days prior to the meeting due to the timing limitations imposed by the review and funding cycle.

Name of Committee: Center for Scientific Review Special Emphasis Panel.

Date: March 5, 1999.

Time: 4:00 PM to 5:00 PM.

Agenda: To review and evaluate grant applications.

Place: Bethesda Holiday Inn, 8120 Wisconsin Avenue, Bethesda, MD 20852.

Contact Person: Jean Hickman, PHD, Scientific Review Administrator, Center for Scientific Review, National Institutes of Health, 6701 Rockledge Drive, Room 4194, MSC 7808, Bethesda, MD 20892, (301) 435–1146.

This notice is being published less than 15 days prior to the meeting due to the timing limitations imposed by the review and funding cycle.

Name of Committee: Center for Scientific Review Special Emphasis Panel ZRG1–SSS–8 (54).

Date: March 8–9, 1999.

Time: 8:00 AM to 5:00 PM.

Agenda: To review and evaluate grant applications.

Place: Bethesda Holiday Inn, 8120 Wisconsin Avenue, Bethesda, MD 20852.

Contact Person: Nadarajen Vydelingum, PhD, Scientific Review Administrator, Special Study Section-8, Center for Scientific Review, National Institutes of Health, 6701 Rockledge Drive, MSC 7854, Rm 5122, Bethesda, MD 20892, vydelinn@csr.nih.gov.

This notice is being published less than 15 days prior to the meeting due to the timing limitations imposed by the review and funding cycle.

Name of Committee: Center for Scientific Review Special Emphasis Panel.

Date: March 8, 1999.

Time: 8:00 AM to 4:00 PM.

Agenda: To review and evaluate grant applications.

Place: Ritz-Carlton Hotels, 1250 S. Hayes Street, Arlington, VA 22202.

Contact Person: Eileen W. Bradley, DSC, Scientific Review Administrator, Center for Scientific Review, National Institutes of Health, 6701 Rockledge Drive, Room 5120, MSC 7854, Bethesda, MD 20892, (301) 435–1179.

This notice is being published less than 15 days prior to the meeting due to the timing limitations imposed by the review and funding cycle.

Name of Committee: Center for Scientific Review Special Emphasis Panel.

Date: March 8–9, 1999.

Time: 8:00 AM to 5:00 PM.

Agenda: To review and evaluate grant applications.

Place: Georgetown Holiday Inn, 2101 Wisconsin Avenue, NW., Washington, DC 20007.

Contact Person: Martin L. Padarathsingh, PhD, Scientific Review Administrator, Center for Scientific Review, National Institutes of Health, 6701 Rockledge Drive, Room 4146, MSC 7804, Bethesda, MD 20892, (301) 435–1717.

This notice is being published less than 15 days prior to the meeting due to the timing limitations imposed by the review and funding cycle.

Name of Committee: Pathophysiological Sciences Initial Review Group, Respiratory and Applied Physiology Study Section.

Date: March 8–9, 1999.

Time: 8:30 AM to 5:00 PM.

Agenda: To review and evaluate grant applications.

Place: Wyndham Bristol Hotel, 2430 Pennsylvania Ave., NW., Washington, DC 20037.

Contact Person: Everett E. Sinnett, PhD, Scientific Review Administrator, Center for Scientific Review, National Institutes of Health, 6701 Rockledge Drive, Room 4120, MSC 7818, Bethesda, MD 20892, (301) 435–1016, ev__sinnett@nih.gov.

This notice is being published less than 15 days prior to the meeting due to the timing limitations imposed by the review and funding cycle.

(Catalogue of Federal Domestic Assistance Program Nos. 93.306, Comparative Medicine, 93.306; 93.333, Clinical Research, 93.333, 93.337, 93.393–93.396, 93.837–93.844, 93.846–93.878, 93.892, 93.893, National Institutes of Health, HHS)

Dated: February 23, 1999.

LaVerne Y. Stringfield,

Committee Management Officer, NIH.

[FR Doc. 99–5176 Filed 3–2–99; 8:45 am]

BILLING CODE 4140–01–M

DEPARTMENT OF HEALTH AND HUMAN SERVICES

National Institutes of Health

National Human Genome Research Institute; Notice of Closed Meeting

Pursuant to section 10(d) of the Federal Advisory Committee Act, as amended (5 U.S.C. Appendix 2), notice is hereby given of the following meeting.

The meeting will be closed to the public in accordance with the provisions set forth in sections 552b(c)(4) and 552b(c)(6), Title 5 U.S.C., as amended. The grant applications and the discussions could disclose confidential trade secrets or commercial property such as patentable material, and personal information concerning individuals associated with the grant applications, the disclosure of which would constitute a clearly unwarranted invasion of personal privacy.

Name of Committee: National Human Genome Research Institute Initial Review Group, Ethical, Legal, Social Implications Review Committee.

Date: March 10, 1999.

Time: 2:00 PM to 4:00 PM.

Agenda: To review and evaluate grant applications.

Place: National Human Genome Research Institute, National Institutes of Health, Building 38A, Conference Room 605, Bethesda, MD 20892, (telephone Conference Call).

Contact Person: Rudy O. Pozzatti, Scientific Review Administrator, Office of Scientific Review; National Human Genome Research Institute, National Institutes of Health, Bethesda, MD 20892, 301 402–0838.

This notice is being published less than 15 days prior to the meeting due to the timing limitations imposed by the review and funding cycle.

(Catalogue of Federal Domestic Assistance Program Nos. 93.172, Human Genome Research, National Institutes of Health, HHS)

Dated: February 25, 1999.

LaVerne Y. Stringfield,

Committee Management Officer, NIH.

[FR Doc. 99–5172 Filed 3–2–99; 8:45 am]

BILLING CODE 4140–01–M

DEPARTMENT OF HEALTH AND HUMAN SERVICES

National Institutes of Health

National Cancer Institute; Notice of Closed Meeting

Pursuant to section 10(d) of the Federal Advisory Committee Act as amended (5 U.S.C. Appendix 2), notice is hereby given of the following meeting.

The meeting will be closed to the public in accordance with the provisions set forth in sections 552b(c)(4) and 552b(c)(6), Title 5 U.S.C. as amended. The grant applications and the discussions could disclose confidential trade secrets of commercial property such as patentable material, and personal information concerning individuals associated with the grant applications, the disclosure of which would constitute a clearly unwarranted invasion of personal privacy.

Name of Committee: National Cancer Institute Special Emphasis Panel, Interdisciplinary Studies in the Genetic Epidemiology of Cancer.

Date: March 26, 1999.

Time: 8:30 AM to 5:00 PM

Agenda: To review and evaluate grant applications.

Place: DoubleTree Hotel, 1750 Rockville Pike, Rockville, MD 20852.

Contact Person: C.M. Kerwin, Phd, Scientific Review Administrator, Special Review Referral and Resources Branch, Division of Extramural Activities, National Cancer Institute, National Institutes of Health, 6130 Executive Boulevard/EPN—609, Rockville, MD 20892–7405, 301/496–7421.

(Catalog of Federal Domestic Assistance Program Nos 93.392, Cancer Construction 93.393, Cancer Cause and Prevention Research 93.354, Cancer Detection and Diagnosis Research 93.395. Cancer Treatment Research, 93.396, Cancer Biology Reserach; 93.397, Cancer Centers Support 93.398, Cancer Research Manpower, 93.399, Cancer Control National Institutes of Health, HHS)

Dated: February 24, 1999.

LaVerne Y. Stringfield,

Committee Management Officer, NIH.

[FR Doc. 99–5174 Filed 3–2–99; 8:45 am]

BILLING CODE 4140–01–M

DEPARTMENT OF HEALTH AND HUMAN SERVICES

National Institutes of Health

National Heart, Lung, and Blood Institute; Notice of Closed Meeting

Pursuant to section 10(d) of the Federal Advisory Committee Act, as amended (5 U.S.C. Appendix 2), notice is hereby given of the following meeting.

The meeting will be closed to the public in accordance with the provisions set forth in sections 552b(c)(4) and 552b(c)(6), Title 5 U.S.C., as amended. The grant applications and the discussions could disclose confidential trade secrets or commercial property such as patentable material, and personal information concerning individuals associated with the grant applications, the disclosure of which would constitute a clearly unwarranted invasion of personal privacy.

Name of Committee: National Heart, Lung, and Blood Institute Special Emphasis Panel, Genesis of Cardiomyopathy with HIV Infection and Alcohol Abuse.

Date: March 25, 1999.

Time: 8:00 AM to 4:00 PM.

Agenda: To review and evaluate grant applications.

Place: Holiday Inn—Silver Spring, 8777 Georgia Avenue, Silver Spring, MD 20910.

Contact Person: Eric H. Brown, PHD, Scientific Review Administrator, NIH, NHLBI, DEA, Rockledge Building II, 6701 Rockledge Drive, Suite 7204, Bethesda, MD C 7956, (301) 435–0299.

(Catalogue of Federal Domestic Assistance Program Nos. 93.233, National Center for Sleep Disorders Research, 93.837, Heart and Vascular Diseases Research; 93.838, Lung Diseases Research; 93.839, Blood Diseases and Resources Research, National Institutes of Health, HHS)

Dated: February 24, 1999.

LaVerne Y. Stringfield,

Committee Management Officer, NIH.

[FR Doc. 99–5175 Filed 3–2–99; 8:45 am]

BILLING CODE 4140–01–M

DEPARTMENT OF HEALTH AND HUMAN SERVICES

National Institutes of Health

National Institute of Mental Health; Notice of Closed Meetings

Pursuant to section 10(d) of the Federal Advisory Committee Act, as amended (5 U.S.C. Appendix 2), notice is hereby given of the following meetings.

The meetings will be closed to the public in accordance with the provisions set forth in section 552b(c)(4) and 552b(c)(6), Title 5 U.S.C., as amended. The grant applications and the discussions could disclose confidential trade secrets or commercial property such as patentable material, and personal information concerning individuals associated with the grant applications, the disclosure of which would constitute a clearly unwarranted invasion of personal privacy.

Name of Committee: National Institute of Mental Health Special Emphasis Panel.

Date: March 26, 1999.

Time: 11:15 am to 12:15 pm.

Agenda: To review and evaluate grant applications.

Place: Parklawn Building—Room 9C–26, 5600 Fishers Lane, Rockville, MD 20857, (Telephone Conference Call).

Contact Person: Lawrence E. Chaitkin, PhD, Scientific Review Administrator, Division of Extramural Activities, National Institute of Mental Health, NIH Parklawn Building, 5600 Fishers Lane, Room 9C–26, Rockville, MD 20857, 301–443–6470.

Name of Committee: National Institute of Mental Health Special Emphasis Panel.
Date: March 31, 1999.
Time: 11:00 am to 12:00 pm.
Agenda: To review and evaluate grant applications.
Place: Parklawn Building—Room 9C–26, 5600 Fishers Lane, Rockville, MD 20857, (Telephone Conference Call).
Contact Person: Monica F. Woodfork, Grants Technical Assistant, Division of Extramural Activities, National Institute of Mental Health, NIH Parklawn Building, 5600 Fishers Lane, Room 9C–26, Rockville, MD 20857, 301–443–6470.

Name of Committee: National Institute of Mental Health Special Emphasis Panel.
Date: April 6, 1999.
Time: 4:00 pm to 5:00 pm.
Agenda: To review and evaluate grant applications.
Place: Parklawn Building—Room 9C–26, 5600 Fishers Lane, Rockville, MD 20857, (Telephone Conference Call).
Contact Person: Monica F. Woodfork, Grants Technical Assistant, Division of Extramural Activities, National Institute of Mental Health, NIH Parklawn Building, 5600 Fishers Lane, Room 9C–26, Rockville, MD 20857, 301–443–6470.

(Catalogue of Federal Domestic Assistance Program Nos. 93.242, Mental Health Research Grants; 93.281, Scientist Development Award, Scientist Development Award for Clinicians, and Research Scientist Award; 93.282, Mental Health National Research Service Awards for Research Training, National Institutes of Health, HHS)

Dated: February 25, 1999.

LaVerne Y. Stringfield,

Committee Management Officer, NIH.

[FR Doc. 99–5166 Filed 3–2–99; 8:45 am]

BILLING CODE 4140–01–M

DEPARTMENT OF HEALTH AND HUMAN SERVICES

National Institutes of Health

National Institute of Mental Health; Notice of Closed Meeting

Pursuant to section 10(d) of the Federal Advisory Committee Act, as amended (5 U.S.C. Appendix 2), notice is hereby given of the following meeting.

The meeting will be closed to the public in accordance with the provisions set forth in sections 552b(c)(4) and 552b(c)(6), Title 5 U.S.C., as amended. The grant applications and the discussions could disclose confidential trade secrets or commercial property such as patentable material, and personal information concerning individuals associated with the grant applications, the disclosure of which would constitute a clearly unwarranted invasion of personal privacy.

Name of Committee: National Institute of Mental Health Special Emphasis Panel.
Date: March 3, 1999.
Time: 11:00 AM to 12:30 PM.
Agenda: To review and evaluate grant applications.
Place: Parkland Building—Room 9C–26, 5600 Fishers Lane, Rockville, MD 20857, (Telephone Conference Call).
Contact Person: Mary Sue Krause, MEDS, Scientific Review Administrator, Division of Extramural Activities, National Institute of Mental Health, NIH, Parklawn Building, 5600 Fishers Lane, Room 9C–26, Rockville, MD 20857, 301–443–6470.

This notice is being published less than 15 days prior to the meeting due to the timing limitations imposed by the review and funding cycle.

(Catalogue of Federal Domestic Assistance Program Nos. 93.242, Mental Health Research Grants; 93.281, Scientist Development Award, Scientist Development Award for Clinicians, and Research Scientist Award; 93.282, Mental Health National Research Service Awards for Research Training, national Institutes of Health, HHS)

Dated: February 25, 1999.

LaVerne Y. Stringfield,

Committee Management Officer, NIH.

[FR Doc. 99–5167 Filed 3–2–99; 8:45 am]

BILLING CODE 4140–01–M

DEPARTMENT OF HEALTH AND HUMAN SERVICES

National Institutes of Health

National Institute of Mental Health; Notice of Closed Meeting

Pursuant to section 10(d) of the Federal Advisory Committee Act, as amended (5 U.S.C. Appendix 2), notice is hereby given of the following meeting.

The meeting will be closed to the public in accordance with the provisions set forth in sections 552b(c)(4) and 552b(c)(6), Title 5 U.S.C., as amended. The contract proposals and the discussions could disclose confidential trade secrets or commercial property such as patentable material, and personal information concerning individuals associated with the contract proposals, the disclosure of which would constitute a clearly unwarranted invasion of personal privacy.

Name of Committee: National Institute of Mental Health Special Emphasis Panel.
Date: March 9–10, 1999.
Time: 9:30 am to 5:00 pm.
Agenda: To review and evaluate contract proposals.
Place: Parklawn Building, 3rd Floor Conference Room, 5600 Fishers Lane, Rockville, MD 20857.
Contact Person: Michael J. Moody, Scientific Review Administrator, Division of Extramural Activities, National Institute of Mental Health, NIH Parklawn Building, 5600 Fishers Lane, Room 9–105, Rockville, MD 20857, 301–443–3367.

This notice is being published less than 15 days prior to the meeting due to the timing limitations imposed by the review and funding cycle.

(Catalogue of Federal Domestic Assistance Program Nos. 93.242, Mental Research Grants; 93.281, Scientific Development Award, Scientist Development Award for Clinicians, and Research Scientist Award; 93.282, Mental Health National Research Service Awards for Research Training, National Institutes of Health, HHS)

Dated: February 25, 1999.

LaVerne Y. Stringfield,

Committee Management Officer, NIH.

[FR Doc. 99–5168 Filed 3–2–99; 8:45 am]

BILLING CODE 4140–01–M

DEPARTMENT OF HEALTH AND HUMAN SERVICES

National Institutes of Health

National Institute on Alcohol Abuse and Alcoholism; Notice of Closed Meetings

Pursuant to section 10(d) of the Federal Advisory Committee Act, as amended (5 U.S.C. Appendix 2), notice is hereby given of the following meetings.

The meeting will be closed to the public in accordance with the provisions set forth in sections 552b(c)(4) and 552b(c)(6), Title 5 U.S.C., as amended. The grant applications and the discussions could disclose confidential trade secrets or commercial property such as patentable material, and personal information concerning individuals associated with the grant applications, the disclosure of which would constitute a clearly unwarranted invasion of personal privacy.

Name of Committee: National Institutes on Alcohol Abuse and Alcoholism Special Emphasis Panel.
Date: March 3, 1999.
Time: 2:00 pm to 5:00 pm.
Agenda: To review and evaluate grant applications.
Place: 6000 Executive Blvd., Suite 409, Rockville, MD 20852, (Telephone Conference Call).
Contact Person: Antonio Noronha, PhD, Scientific Review Administrator, Extramural Project Review Branch, National Institute on Alcohol Abuse and Alcoholism, Suite 409, 6000 Executive Boulevard, Bethesda, MD 20892–7003, 301–443–7722, anoronha@willco.niaaa.nih.gov

This notice is being published less than 15 days prior to the meeting due to the timing limitations imposed by the review and funding cycle.

Name of Committee: National Institute on Alcohol Abuse and Alcoholism Special Emphasis Panel.
Date: March 4, 1999.
Time: 2:00 pm to 5:00 pm.

Agenda: To review and evaluate grant applications.

Place: 6000 Executive Blvd., Suite 409, Rockville, MD 20852, (Telephone Conference Call).

Contact Person: Antonio Noronha, PHD, Scientific Review Administrator, Extramural Project Review Branch, National Institute on Alcohol Abuse and Alcoholism, Suite 409, 6000 Executive Boulevard, Bethesda, MD 20892–7003, 301–443–7722, anoronha@willco.niaaa.nih.gov

This notice is being published less than 15 days prior to the meeting due to the timing limitations imposed by the review and funding cycle.

(Catalogue of Federal Domestic Assistance Program Nos. 93.271, Alcohol Research Career Development Awards for Scientists and Clinicians; 93.272, Alcohol National Research Service Awards for Research Training; 93.273, Alcohol Research Programs; 93.891, Alcohol Research Center Grants, National Institutes of Health, HHS)

Dated: February 25, 1999.

LaVerne Y. Stringfield,

Committee Management Officer, NIH.

[FR Doc. 99–5169 Filed 3–2–99; 8:45 am]

BILLING CODE 4140–01–M

DEPARTMENT OF HEALTH AND HUMAN SERVICES

National Institutes of Health

National Institute on Alcohol Abuse and Alcoholism; Notice of Closed Meeting

Pursuant to section 10(d) of the Federal Advisory Committee Act, as amended (5 U.S.C. Appendix 2), notice is hereby given of the following meeting.

The meeting will be closed to the public in accordance with the provisions set forth in sections 552b(c)(4) and 552b(c)(6), Title 5 U.S.C., as amended. The grant applications and the discussions could disclose confidential trade secrets or commercial property such as patentable material, and personal information concerning individuals associated with the grant applications, the disclosure of which would constitute a clearly unwarranted invasion of personal privacy.

Name of Committee: National Institute on Alcohol Abuse and Alcoholism Initial Review Group, Biomedical Research Review Subcommittee.

Date: March 1–2, 1999.

Time: March 1, 1999, 4:00 pm to 6:00 pm.

Agenda: To review and evaluate grant applications.

Place: Bethesda Hyatt Regency, One Bethesda Metro, Bethesda, MD 20814.

Contact Person: Ronald Suddendorf, PHD, Scientific Review Administrator, Extramural Project Review Branch, National Institute on Alcohol Abuse and Alcoholism, National Institutes of Health, Suite 409, 6000 Executive Blvd., Bethesda, MD 90872–7003, 301–443–6106, rsuddend@willco.niaaa.nih.gov

This notice is being published less than 15 days prior to the meeting due to the timing limitations imposed by the review and funding cycle.

(Catalogue of Federal Domestic Assistance Program Nos. 93.271, Alcohol Research Career Development Awards for Scientists and Clinicians; 93.272, Alcohol National Research Service Awards for Research Training; 93.273, Alcohol Research Programs; 93.891, Alcohol Research Center Grants, National Institutes of Health, HHS)

Dated: February 25, 1999.

LaVerne Y. Stringfield,

Committee Management Officer, NIH.

[FR Doc. 99–5170 Filed 3–2–99; 8:45 am]

BILLING CODE 4140–01–M

DEPARTMENT OF HEALTH AND HUMAN SERVICES

National Institutes of Health

National Institute of Allergy and Infectious Diseases; Notice of Meetings

Pursuant to section 10(d) of the Federal Advisory Committee Act, as amended (5 U.S.C. Appendix 2), notice is hereby given of meetings of the National Advisory Allergy and Infectious Diseases Council.

The meetings will be open to the public as indicated below, with attendance limited to space available. Individuals who plan to attend and need special assistance, such as sign language interpretation or other reasonable accommodations, should notify the Contact Person listed below in advance of the meeting.

The meetings will be closed to the public in accordance with the provisions set forth in sections 552b(c)(4) and 552b(c)(6), Title 5 U.S.C., as amended. The grant applications and/or contract proposals and the discussions could disclose confidential trade secrets or commercial property such as patentable material, and personal information concerning individuals associated with the grant applications and/or contract proposals, the disclosure of which would constitute a clearly unwarranted invasion of personal privacy.

Name of Committee: National Advisory Allergy and Infectious Diseases Council.

Date: May 24–25, 1999.

Open: May 24, 1999, 1:00 pm to 3:30 pm.

Agenda: The meeting of the full Council will be open to the public for general discussion and program presentations.

Place: National Institutes of Health, 9000 Rockville Pike, Building 31C, Conference Room 6, Bethesda, MD 20892.

Closed: May 24, 1999, 3:30 pm to 4:30 pm.

Agenda: To review and evaluate grant applications.

Place: National Institutes of Health, 9000 Rockville Pike, Building 31C, Conference Room 6, Bethesda, MD 20892.

Contact Person: John J. McGowan, Director, Division of Extramural Activities, NIAID, Solar Building, Room 3C20, 6003 Executive Boulevard, Rockville, MD 20892, 301–496–7291.

Name of Committee: National Advisory Allergy and Infectious Diseases Council, Microbiology and Infectious Diseases Subcommittee.

Date: May 24–25, 1999.

Closed: May 24, 1999, 8:30 am to 1:00 pm.

Agenda: To review and evaluate grant applications.

Place: National Institutes of Health, 9000 Rockville Pike, Building 31C, Conference Room 6, Bethesda, MD 20892.

Open: May 25, 1999, 8:30 am to adjournment.

Agenda: Open program advisory discussions and presentations.

Place: National Institutes of Health, 9000 Rockville Pike, Building 31C, Conference Room 6, Bethesda, MD 20892.

Contact Person: John J. McGowan, Director, Division of Extramural Activities, NIAID, Solar Building, Room 3C20, 6003 Executive Boulevard, Rockville, MD 20892, 301–496–7291.

Name of Committee: National Advisory Allergy and Infectious Diseases Council, Allergy, Immunology and Transplantation Subcommittee.

Date: May 24–25, 1999.

Closed: May 24, 1999, 8:30 am to 1:00 pm.

Agenda: To review and evaluate grant applications.

Place: Natcher Building, Conference Room F1/F2, 45 Center Drive, Bethesda, MD 20892.

Open: May 25, 1999, 8:30 am to adjournment.

Agenda: Open program advisory discussions and presentations.

Place: Natcher Building, Conference Room F1/F2, 45 Center Drive, Bethesda, MD 20892.

Contact Person: John J. McGowan, Director, Division of Extramural Activities, NIAID, Solar Building, Room 3C20, 6003 Executive Boulevard, Rockville, MD 20892, 301–496–7291.

Name of Committee: National Advisory Allergy and Infectious Diseases Council, Acquired Immunodeficiency Syndrome Subcommittee.

Date: May 24–25, 1999.

Closed: May 24, 1999, 8:30 am to 1:00 pm.

Agenda: To review and evaluate grant applications.

Place: Natcher Building, Conference Room E1/E2, 45 Center Drive, Bethesda, MD 20892.

Open: May 25, 1999, 8:30 am to adjournment.

Agenda: Open program advisory discussions and presentations.

Place: Natcher Building, Conference Room E1/E2, 45 Center Drive, Bethesda, MD 20892.

Contact Person: John J. McGowan, Director, Division of Extramural Activities, NIAID,

Solar Building, Room 3C20, 6003 Executive Boulevard, Rockville, MD 20892, 301–496–7291.

(Catalogue of Federal Domestic Assistance Program Nos. 93.855, Allergy, Immunology, and Transplantation Research; 93.856, Microbiology and Infectious Diseases Research, National Institutes of Health, HHS)

Dated: February 25, 1999.

LaVerne Y. Stringfield,

Committee Management Officer, NIH.

[FR Doc. 99–5171 Filed 3–2–99; 8:45 am]

BILLING CODE 4140–01–M

DEPARTMENT OF HEALTH AND HUMAN SERVICES

National Institutes of Health

National Institute of General Medical Sciences; Notice of Closed Meeting

Pursuant to section 10(d) of the Federal Advisory Committee, Act, as amended (5 U.S.C. Appendix 2), notice is hereby given of the following meeting.

The meeting will be closed to the public in accordance with the provisions set forth in sections 552b(c)(4) and 552b(c)(6), Title 5 U.S.C., as amended. The grant applications and the discussions could disclose confidential trade secrets or commercial property such as patentable material, and personal information concerning individuals associated with the grant applications, the disclosure of which would constitute a clearly unwarranted invasion of personal privacy.

Name of Committee: National Institute of General Medical Sciences Special Emphasis Panel, Communications Technology Supplement to MARC and MBRS.

Date: March 22–23, 1999.

Time: 8:30 am to 5:00 pm.

Agenda: To review and evaluate grant applications.

Place: Gaithersburg Hilton Hotel, Damestown Conference Room, 620 Perry Parkway, Gaithersburg, MD 20877.

Contact Person: Richard I Martinez, PhD, Office of Review Activities, Office of Scientific Review, National Institute of General Medical Sciences, National Institutes of Health, Natcher Building, Room 1AS–19G, Bethesda, MD 20892–6200 (301) 594–2849.

(Catalogue of Federal Domestic Assistance Program Nos. 93.375, Minority Biomedical Research Support; 93.821, Cell Biology and Biophysics Research; 93.859, Pharmacology, Physiology and Biological Chemistry Research; 93.862, Genetics and Developmental Biology Research; 93.88, Minority Access to Research Careers; 93.96, Special Minority Initiatives, National Institutes of Health, HHS)

Dated: February 24, 1999.

LaVerne Y. Stringfield,

Committee Management Officer, NIH.

[FR Doc. 99–5173 Filed 3–2–99; 8:45 am]

BILLING CODE 4140–01–M

DEPARTMENT OF HEALTH AND HUMAN SERVICES

Substance Abuse and Mental Health Services Administration Fiscal Year (FY) 1999 Funding Opportunities

AGENCY: Substance Abuse and Mental Health Services Administration, HHS.

ACTION: Notice of funding availability.

SUMMARY: The Substance Abuse and Mental Health Services Administration (SAMHSA) Center for Substance Abuse Prevention (CSAP), announces the availability of FY 1999 funds for grants for the following activity. This activity is discussed in more detail under Section 4 of this notice. This notice is not a complete description of the activity; potential applicants *must* obtain a copy of the Guidance for Applicants (GFA) before preparing an application.

Activity	Application deadline	Estimated funds available	Estimated number of awards	Project period
Community-Initiated Interventions	5/18/99	$8 million	20–26	Up to 3 yrs.

Note: SAMHSA will publish additional notices of available funding opportunities for FY 1999 in subsequent issues of the **Federal Register**.

The actual amount available for awards and their allocation may vary, depending on unanticipated program requirements and the number and quality of applications received. FY 1999 funds for the activity discussed in this announcement were appropriated by the Congress under Public Law No. 105–277. SAMHSA's policies and procedures for peer review and Advisory Council review of grant and cooperative agreement applications were published in the **Federal Register** (Vol. 58, No. 126) on July 2, 1993.

The Public Health Service (PHS) is committed to achieving the health promotion and disease prevention objectives of Healthy People 2000, a PHS-led national activity for setting priority areas. The SAMHSA Centers' substance abuse and mental health services activities address issues related to Healthy People 2000 objectives of Mental Health and Mental Disorders; Alcohol and Other Drugs; Clinical Preventive Services; HIV Infection; and Surveillance and Data Systems. Potential applicants may obtain a copy of Healthy People 2000 (*Full Report*: Stock No. 017–001-00474–0) or *Summary Report*: Stock No. 017–001–00473–1) through the Superintendent of Documents, Government Printing Office, Washington, DC 20402–9325 (*Telephone*: 202–512–1800).

GENERAL INSTRUCTIONS: Applicants must use application form PHS 5161–1 (Rev. 5/96; OMB No. 0937–0189). The application kit contains the GFA (complete programmatic guidance and instructions for preparing and submitting applications), the PHS 5161–1 which includes Standard Form 424 (Face Page), and other documentation and forms. Application kits may be obtained from the organization specified for the activity covered by this notice (see Section 4).

When requesting an application kit, the applicant must specify the particular activity for which detailed information is desired. This is to ensure receipt of all necessary forms and information, including any specific program review and award criteria.

The PHS 5161–1 application form and the full text of the activity (i.e., the GFA) described in Section 4 are available electronically via SAMHSA's World Wide Web Home Page (address: http://www.samhsa.gov).

APPLICATION SUBMISSION: Applications must be submitted to: SAMHSA Programs, Center for Scientific Review, National Institutes of Health, Suite 1040, 6701 Rockledge Drive MSC–7710, Bethesda, Maryland 20892–7710*.

(*Applicants who wish to use express mail or courier service should change the zip code to 20817.)

APPLICATION DEADLINES: The deadline for receipt of applications is listed in the table above.

Competing applications must be received by the indicated receipt date to be accepted for review. An application received after the deadline may only be accepted if it carries a legible proof-of-mailing date assigned by the carrier and that date is not later than one week prior

to the deadline date. Private metered postmarks are not acceptable as proof of timely mailing.

Applications received after the deadline date and those sent to an address other than the address specified above will be returned to the applicant without review.

FOR FURTHER INFORMATION CONTACT: Requests for activity-specific technical information should be directed to the program contact person identified for the activity covered by this notice (see Section 4).

Requests for information concerning business management issues should be directed to the grants management contact person identified for the activity covered by this notice (see Section 4).

Table of Contents

1. Program Background and Objectives
2. Special Concerns
3. Criteria for Review and Funding
3.1 General Review Criteria
3.2 Funding Criteria for Scored Applications
4. Special FY 1999 Substance Abuse and Mental Health Services Activities
4.1 Grants
4.1.1 Community-Initiated Prevention Interventions (Community-Initiated Interventions)
5. Public Health System Reporting Requirements
6. PHS Non-use of Tobacco Policy Statement
7. Executive Order 12372

1. Program Background and Objectives

SAMHSA's mission within the Nation's health system is to improve the quality and availability of prevention, early intervention, treatment, and rehabilitation services for substance abuse and mental illnesses, including co-occurring disorders, in order to improve health and reduce illness, death, disability, and cost to society.

Reinventing government, with its emphases on redefining the role of Federal agencies and on improving customer service, has provided SAMHSA with a welcome opportunity to examine carefully its programs and activities. As a result of that process, SAMHSA moved assertively to create a renewed and strategic emphasis on using its resources to generate knowledge about ways to improve the prevention and treatment of substance abuse and mental illness and to work with State and local governments as well as providers, families, and consumers to effectively use that knowledge in everyday practice.

SAMHSA's FY 1999 Knowledge Development and Application (KD&A) agenda is the outcome of a process whereby providers, services researchers, consumers, National Advisory Council members and other interested persons participated in special meetings or responded to calls for suggestions and reactions. From this input, each SAMHSA Center developed a ''menu'' of suggested topics. The topics were discussed jointly and an agency agenda of critical topics was agreed to. The selection of topics depended heavily on policy importance and on the existence of adequate research and practitioner experience on which to base studies. While SAMHSA's FY 1999 KD&A programs will sometimes involve the evaluation of some delivery of services, they are services studies and application activities, not merely evaluation, since they are aimed at answering policy-relevant questions and putting that knowledge to use.

SAMHSA differs from other agencies in focusing on needed information at the services delivery level, and in its question-focus. Dissemination and application are integral, major features of the programs. SAMHSA believes that it is important to get the information into the hands of the public, providers, and systems administrators as effectively as possible. Technical assistance, training, preparation of special materials will be used, in addition to normal communications means.

SAMHSA also continues to fund legislatively-mandated services programs for which funds are appropriated.

2. Special Concerns

SAMHSA's legislatively-mandated services programs do provide funds for mental health and/or substance abuse treatment and prevention services. However, SAMHSA's KD&A activities do not provide funds for mental health and/or substance abuse treatment and prevention services except sometimes for costs required by the particular activity's study design. Applicants are required to propose true knowledge application or knowledge development and application projects. Applications seeking funding for services projects under a KD&A activity will be considered nonresponsive.

Applications that are incomplete or nonresponsive to the GFA will be returned to the applicant without further consideration.

3. Criteria for Review and Funding

Consistent with the statutory mandate for SAMHSA to support activities that will improve the provision of treatment, prevention and related services, including the development of national mental health and substance abuse goals and model programs, competing applications requesting funding under the specific project activity in section 4 will be reviewed for technical merit in accordance with established PHS/SAMHSA peer review procedures.

3.1 General Review Criteria

As published in the **Federal Register** on July 2, 1993 (Vol. 58, No. 126), SAMHSA's ''Peer Review and Advisory Council Review of Grant and Cooperative Agreement Applications and Contract Proposals,'' peer review groups will take into account, among other factors as may be specified in the application guidance materials, the following general criteria:

- Potential significance of the proposed project;
- Appropriateness of the applicant's proposed objectives to the goals of the specific program;
- Adequacy and appropriateness of the proposed approach and activities;
- Adequacy of available resources, such as facilities and equipment;
- Qualifications and experience of the applicant organization, the project director, and other key personnel; and
- Reasonableness of the proposed budget.

3.2 Funding Criteria for Scored Applications

Applications will be considered for funding on the basis of their overall technical merit as determined through the peer review group and the appropriate National Advisory Council review process.

Other funding criteria will include:

- Availability of funds.

Additional funding criteria specific to the programmatic activity may be included in the application guidance materials.

4. Special FY 1999 SAMHSA Activities

4.1 Grants

4.1.1 Community-Initiated Prevention Interventions (Community-Initiated Interventions)

- *Application Deadline:* May 18, 1999.
- *Purpose:* The Substance Abuse and Mental Health Services Administration (SAMHSA), Center for Substance Abuse Prevention (CSAP) announces the availability of community-initiated intervention grants to support Knowledge Development with At-Risk Populations.

This program, ''Community-Initiated Prevention Interventions,'' solicits applications for studies that field test effective substance abuse prevention interventions that have been shown to prevent or reduce alcohol, tobacco, or

other illegal drug use as well as associated social, emotional, behavioral, cognitive and physical problems among at-risk populations in their local community(ies). Through this initiative, grants will be made for projects that test these interventions in local community settings and/or with diverse populations, or replicate those proven to be effective in other populations and/or communities, or assess how well they can be sustained as subjects progress through normal developmental stages.

• *Eligible Applicants:* Applications may be submitted by units of State or local governments and by domestic private non-profit and for-profit organizations such as community-based organizations, as well as universities, colleges, faith-based organizations, and hospitals.

• *Amount:* Approximately $8 million will be available to support 20–26 awards under this GFA in FY 1999. Awards are expected to range from $300,000 to $400,000 in total costs including direct and indirect costs. These funds can pay for the local adaptive intervention services, data collection and analysis, preparation of the program reports, submission of final reports and curricula, and intervention implementation manuals for others to use for replications. Grant funds can be used to pay for the intervention services if other funds are not available.

Special Note: As specified in Congressional report language, at least one application from Iowa that is found to be technically acceptable through the peer review and CSAP National Advisory Council review processes will be funded to implement a demonstration program targeting prevention of methamphetamine abuse, if such an application is submitted.

• *Catalog of Federal Domestic Assistance Number:* 93.230.

• Program Contact. For programmatic or technical assistance, contact: Soledad Sambrano, Ph.D., Division of Knowledge Development and Evaluation, Center for Substance Abuse Prevention, Substance Abuse and Mental Health Services Administration, Rockwall II, Room 1075, 5600 Fishers Lane, Rockville, MD 20857, (301) 443–9110.

For grants management issues, contact: Peggy Jones, Division of Grants Management, OPS, Substance Abuse and Mental Health Services Administration, Rockwall II, Room 630, 5600 Fishers Lane, Rockville, Maryland 20857, (301) 443–3958.

For application kits, contact: National Clearinghouse for Alcohol and Drug Information (NCADI), P.O. Box 2345, Rockville, MD 20847–2345, Voice: (800) 729–6686, TDD: (800) 487–4889.

• SAMHSA is sponsoring three technical assistance workshops for potential applicants. The workshops will be held at the following locations: March 11, 1999—Washington, DC; March 17, 1999—Chicago, IL; and March 19—Los Angeles, CA. For more information, please call Ms. Lisa Wilder, Workshop Coordinator, at 301–984–1471, extension 333.

5. Public Health System Reporting Requirements

This program is not subject to the Public Health System Reporting Requirements.

6. PHS Non-use of Tobacco Policy Statement

The PHS strongly encourages all grant and contract recipients to provide a smoke-free workplace and promote the non-use of all tobacco products. In addition, Public Law 103–227, the Pro-Children Act of 1994, prohibits smoking in certain facilities (or in some cases, any portion of a facility) in which regular or routine education, library, day care, health care, or early childhood development services are provided to children. This is consistent with the PHS mission to protect and advance the physical and mental health of the American people.

7. Executive Order 12372

Applications submitted in response to the FY 1999 activity listed above are subject to the intergovernmental review requirements of Executive Order 12372, as implemented through DHHS regulations at 45 CFR Part 100. E.O. 12372 sets up a system for State and local government review of applications for Federal financial assistance. Applicants (other than Federally recognized Indian tribal governments) should contact the State's Single Point of Contact (SPOC) as early as possible to alert them to the prospective application(s) and to receive any necessary instructions on the State's review process. For proposed projects serving more than one State, the applicant is advised to contact the SPOC of each affected State. A current listing of SPOCs is included in the application guidance materials. The SPOC should send any State review process recommendations directly to: Office of Extramural Activities, Policy and Review, Substance Abuse and Mental Health Services Administration, Parklawn Building, Room 17–89, 5600 Fishers Lane, Rockville, Maryland 20857.

The due date for State review process recommendations is no later than 60 days after the specified deadline date for the receipt of applications. SAMHSA does not guarantee to accommodate or explain SPOC comments that are received after the 60-day cut-off.

Dated: February 19, 1999.

Richard Kopanda,

Executive Officer, SAMHSA.

[FR Doc. 99–5133 Filed 3–2–99; 8:45 am]

BILLING CODE 4162–20–P

DEPARTMENT OF HOUSING AND URBAN DEVELOPMENT

[Docket No. FR–4445–N–04]

Notice of Proposed Information Collection: Comment Request

AGENCY: Office of the Assistant Secretary for Housing, HUD.

ACTION: Notice.

SUMMARY: The proposed information collection requirement described below will be submitted to the Office of Management and Budget (OMB) for review, as required by the Paperwork Reduction Act. The Department is soliciting public comments on the subject proposal.

DATES: *Comments due date:* May 3, 1999.

ADDRESSES: Interested persons are invited to submit comments regarding this proposal. Comments should refer to the proposal by name and/or OMB Control Number and should be sent to: Wayne Eddins, Reports Management Officer, Department of Housing and Urban Development, 451 7th Street, SW., Room 4176, Washington, DC 20410.

FOR FURTHER INFORMATION CONTACT: Leslie Bromer, Office of Insured Single Family Housing, telephone number (202) 708–1672 (this is not a toll-free number) for copies of the proposed forms and other available documents.

SUPPLEMENTARY INFORMATION: The Department is submitting the proposed information collection to OMB for review, as required by the Paperwork Reduction Act of 1995 (44 U.S.C. Chapter 35, as amended).

This Notice is soliciting comments from members of the public and affected agencies concerning the proposed collection of information to: (1) Evaluate whether the proposed collection of information is necessary for the proper performance of the functions of the agency, including whether the information will have practical utility; (2) Evaluate the accuracy of the agency's estimate of the burden of the proposed collection of information; (3) Enhance the quality, utility, and clarity of the

information to be collected; and (4) Minimize the burden of the collection of information on those who are to respond; including the use of appropriate automated collection techniques or other forms of information technology, e.g., permitting electronic submission of responses.

This Notice also lists the following information.

Title of Proposal: Single Family Application for Insurance Benefits.

OMB Control Number, if applicable: 2502–0429.

Description of the need for the information and proposed use: This notice requests OMB information collection authorization for HUD–27011, Parts A, B, C, D and E, to allow mortgagees to claim insurance benefits on single family mortgages. These forms are essential to continue processing and paying on approximately 90,000 claims that are submitted annually.

Agency Form Numbers, if applicable: 27011A, B, C, D & E.

Estimation of the total numbers of hours needed to prepare the information collection including number of respondents, frequency of response, and hours of response: The estimated number of respondents is 4,000, the total annual responses are 90,000, and the total annual hours of response are estimated at 119,700 based on 1.33 hours per response.

Status of the proposed information collection: New collection.

Authority: The Paperwork Reduction Act of 1995, 44 U.S.C., Chapter 35, as amended.

Dated: February 20, 1999.

William C. Apgar,

Assistant Secretary for Housing-Federal Housing Commissioner.

[FR Doc. 99–5161 Filed 3–2–99; 8:45 am]

BILLING CODE 4210–27–M

DEPARTMENT OF HOUSING AND URBAN DEVELOPMENT

[Docket No. FR–4446–N–01]

Notice of Submission of Proposed Information Collection to OMB; Emergency Comment Request

AGENCY: Office of the Assistant Secretary for Community Planning and Development, HUD.

ACTION: Notice.

SUMMARY: The proposed information collection requirement described below has been submitted to the Office of Management and Budget (OMB) for emergency review and approval, as required by the Paperwork Reduction Act. The Department is soliciting public comments on the subject proposal.

DATES: Comments Due date: March 10, 1999.

ADDRESSES: Interested persons are invited to submit comments regarding this proposal. Comments must be received within seven (7) days from the date of this Notice. Comments should refer to the proposal by name and should be sent to: Joseph F. Lackey, Jr., HUD Desk Officer, Office of Management and Budget, New Executive Office Building, Washington, DC 20503.

FOR FURTHER INFORMATION CONTACT: Wayne Eddins, Reports Management Officer, Department of Housing and Urban Development, 451 Seventh Street, SW, Washington, DC 20410, telephone (202) 708–0050. This is not a toll-free number. Copies of available documents submitted to OMB may be obtained from Mr. Eddins.

SUPPLEMENTARY INFORMATION: This Notice informs the public that the Department of Housing and Urban Development (HUD) has submitted to OMB, for emergency processing, an information collection package with respect to a Notice of Funding Availability (NOFA) for the HUD Rural Housing and Economic Development program (RHEP). This emergency processing is essential in order to meet the Congressionally mandated date of June 1, 1999 by which to award the funds.

The Department of Veterans Affairs and Urban Development and Independent Agencies Appropriations Act, 1999 (Pub. L. 105–276, approved October 21, 1998; 112 Stat. 2461) (FY 1999 HUD Appropriations Act) authorized and appropriated $25,000,000 to develop capacity at the state and local level to develop rural housing and economic development and to support innovative housing and economic development activities in rural areas. In addition $3 million is available in carryover from FY 1998 funds. The funds will be available as follows:

HUD will award up to $4 million to develop capacity at the state and local level for developing rural housing and economic development which will go directly to Indian Tribes, local rural nonprofits, and community development corporations and $5 million in seed support for the same entities that are located in areas that have limited capacity for the development of rural housing and economic development.

HUD will award up to $17 million to Indian Tribes, State Housing finance agencies, state community and/or economic development agencies, local rural non-profits and CDCs to support innovative housing and economic development activities in rural areas.

HUD will award up to $6 million in seed support for Indian tribes, local rural nonprofits and CDCs that are located in areas that have limited capacity for the development of rural housing and economic development.

In addition to these funds which will be awarded in responses to the NOFA, the remaining $1 million appropriated by the FY 1999 HUD Appropriations Act will be used to create a clearing house of ideas for innovative strategies for rural housing and economic development and revitalization.

This Notice is soliciting comments from members of the public and affecting agencies concerning the proposed collection of information to: (1) Evaluate whether the proposed collection of information is necessary for the proper performance of the functions of the agency, including whether the information will have practical utility; (2) Evaluate the accuracy of the agency estimate of the burden of the proposed collection of information; (3) Enhance the quality, utility, and clarity of the information to be collected; and (4) Minimize the burden of the collection of information on those who are to respond; including through the use of appropriate automated collection techniques or other forms of information technology, e.g., permitting electronic submission of responses.

The Department has submitted the proposal for the collection of information, as described below, to OMB for review, as required by the Paperwork Reduction Act (44 U.S.C. Chapter 35):

Title of Proposal: NOFA: Rural Housing and Economic Development Program.

OMB Control Number, if application:

Description of the need for the information and proposed use: The information collection is essential so that HUD staff may determine the eligibility, qualifications and capacity of applicants to carry out activities under the Rural Housing and Economic Development program. HUD will review the information provided by the applicants against the selection criteria contained in the NOFA in order to rate and rank the applications and select the best and most qualified applications for funding. The selection criteria are: (1) Capacity of the applicant and relevant organizational staff; (2) Need/Extent of the Problem; (3) Soundness of Approach; (4) Leveraging of Resources; and (5) Comprehensiveness and coordination.

Agency form numbers, if applicable: SF 424 (including a maximum 25 page application in response to the Factors for Award).

Members of affected public: Eligible applicants are rural non-profits and Community Development Corporations, Indian Tribes, State Housing Finance Agencies and State Community or Economic Development Agencies.

Estimation of the total number of hours needed to prepare the information collection, including number of respondents, frequency of response and hours of response: The estimated number of applicants is 200, with approximately 75 recipients. The proposed frequency of the response to the collection of information is one-time; the application needs to be submitted only one time.

Status of the proposed information collection: New collection.

Authority: The Paperwork Reduction Act of 1995, 44 U.S.C. Chapter 35, as amended.

Dated: February 24, 1999.

David S. Cristy,

Director, IRM Policy and Management Division.

[FR Doc. 99–5162 Filed 3–2–99; 8:45 am]

BILLING CODE 4210–13–M

DEPARTMENT OF THE INTERIOR

Bureau of Land Management

[AZ–040–99–1020–02]

Gila Box Riparian National Conservation Area; Notice of Meeting

AGENCY: Bureau of Land Management, Interior.

ACTION: Gila Box Riparian National Conservation Area Advisory Committee Meeting.

SUMMARY: The purpose of this notice is to announce the next meeting of the Gila Box Riparian National Conservation Area Advisory Committee Meeting. The purpose of the advisory committee is to provide informed advice to the Safford Field Office Manager on management of public lands in the Gila Box Riparian National Conservation Area. The committee meets as needed, generally between two and four times a year.

The meeting will take place from 1 p.m. to 4:15 p.m. on April 9, 1999 at the Bureau of Land Management, Safford Field Office located at 711 14th Avenue, Safford, Arizona. The topics that will be discussed include review of the final plan, implementation of the plan and status of appeals and lawsuits. A public comment period will be provided from 3:45 to 4:15 p.m.

DATES: Meeting will be held on April 9, 1999 starting at 1 p.m.

SUPPLEMENTARY INFORMATION: For further information, contact Tim Goodman, Range Management Specialist, Safford Field Office, 711 14th Avenue, Safford, Arizona 85546; telephone number (520) 348–4400.

Dated: February 19, 1999.

William T. Civish,

Field Office Manager.

[FR Doc. 99–5223 Filed 3–2–99; 8:45 am]

BILLING CODE 4310–32–M

INTERNATIONAL TRADE COMMISSION

[Investigation No. 731-TA–25 (Review)]

Anhydrous Sodium Metasilicate From France

AGENCY: United States International Trade Commission.

ACTION: Scheduling of a full five-year review concerning the antidumping duty order on anhydrous sodium metasilicate from France.

SUMMARY: The Commission hereby gives notice of the scheduling of a full review pursuant to section 751(c)(5) of the Tariff Act of 1930 (19 U.S.C. § 1675(c)(5)) (the Act) to determine whether revocation of the antidumping duty order on anhydrous sodium metasilicate from France would be likely to lead to continuation or recurrence of material injury. For further information concerning the conduct of this review and rules of general application, consult the Commission's Rules of Practice and Procedure, part 201, subparts A through E (19 CFR part 201), and part 207, subparts A, D, E, and F (19 CFR part 207). Recent amendments to the Rules of Practice and Procedure pertinent to five-year reviews, including the text of subpart F of part 207, are published at 63 F.R. 30599, June 5, 1998, and may be downloaded from the Commission's World Wide Web site at http://www.usitc.gov/rules.htm.

EFFECTIVE DATE: February 25, 1999.

FOR FURTHER INFORMATION CONTACT: Jozlyn Kalchthaler (202–205–3457), Office of Investigations, U.S. International Trade Commission, 500 E Street SW, Washington, DC 20436. Hearing-impaired persons can obtain information on this matter by contacting the Commission's TDD terminal on 202–205–1810. Persons with mobility impairments who will need special assistance in gaining access to the Commission should contact the Office of the Secretary at 202–205–2000. General information concerning the Commission may also be obtained by accessing its internet server (http://www.usitc.gov).

SUPPLEMENTARY INFORMATION:

Background.—On January 7, 1999, the Commission determined that responses to its notice of institution of the subject five-year review were such that a full review pursuant to section 751(c)(5) of the Act should proceed (64 FR 4892, February 1, 1999). A record of the Commissioners' votes, the Commission's statement on adequacy, and any individual Commissioner's statements will be available from the Office of the Secretary and at the Commission's web site.

Participation in the review and public service list.—Persons, including industrial users of the subject merchandise and, if the merchandise is sold at the retail level, representative consumer organizations, wishing to participate in this review as parties must file an entry of appearance with the Secretary to the Commission, as provided in section 201.11 of the Commission's rules, by 45 days after publication of this notice. A party that filed a notice of appearance following publication of the Commission's notice of institution of the review need not file an additional notice of appearance. The Secretary will maintain a public service list containing the names and addresses of all persons, or their representatives, who are parties to the review.

Limited disclosure of business proprietary information (BPI) under an administrative protective order (APO) and BPI service list.—Pursuant to section 207.7(a) of the Commission's rules, the Secretary will make BPI gathered in this review available to authorized applicants under the APO issued in the review, provided that the application is made by 45 days after publication of this notice. Authorized applicants must represent interested parties, as defined by 19 U.S.C. § 1677(9), who are parties to the review. A party granted access to BPI following publication of the Commission's notice of institution of the review need not reapply for such access. A separate service list will be maintained by the Secretary for those parties authorized to receive BPI under the APO.

Staff report.—The prehearing staff report in the review will be placed in the nonpublic record on June 30, 1999, and a public version will be issued thereafter, pursuant to section 207.64 of the Commission's rules.

Hearing.—The Commission will hold a hearing in connection with the review

beginning at 9:30 a.m. on July 21, 1999, at the U.S. International Trade Commission Building. Requests to appear at the hearing should be filed in writing with the Secretary to the Commission on or before July 13, 1999. A nonparty who has testimony that may aid the Commission's deliberations may request permission to present a short statement at the hearing. All parties and nonparties desiring to appear at the hearing and make oral presentations should attend a prehearing conference to be held at 9:30 a.m. on July 16, 1999 at the U.S. International Trade Commission Building. Oral testimony and written materials to be submitted at the public hearing are governed by sections 201.6(b)(2), 201.13(f), 207.24, and 207.66 of the Commission's rules. Parties must submit any request to present a portion of their hearing testimony *in camera* no later than 7 days prior to the date of the hearing.

Written submissions.—Each party to the review may submit a prehearing brief to the Commission. Prehearing briefs must conform with the provisions of section 207.65 of the Commission's rules; the deadline for filing is July 12, 1999. Parties may also file written testimony in connection with their presentation at the hearing, as provided in section 207.24 of the Commission's rules, and posthearing briefs, which must conform with the provisions of section 207.67 of the Commission's rules. The deadline for filing posthearing briefs is July 30, 1999; witness testimony must be filed no later than three days before the hearing. In addition, any person who has not entered an appearance as a party to the review may submit a written statement of information pertinent to the subject of the review on or before July 30, 1999. On August 26, 1999, the Commission will make available to parties all information on which they have not had an opportunity to comment. Parties may submit final comments on this information on or before August 30, 1999, but such final comments must not contain new factual information and must otherwise comply with section 207.68 of the Commission's rules. All written submissions must conform with the provisions of section 201.8 of the Commission's rules; any submissions that contain BPI must also conform with the requirements of sections 201.6, 207.3, and 207.7 of the Commission's rules. The Commission's rules do not authorize filing of submissions with the Secretary by facsimile or electronic means.

In accordance with sections 201.16(c) and 207.3 of the Commission's rules, each document filed by a party to the review must be served on all other parties to the review (as identified by either the public or BPI service list), and a certificate of service must be timely filed. The Secretary will not accept a document for filing without a certificate of service.

Authority: This review is being conducted under authority of title VII of the Tariff Act of 1930; this notice is published pursuant to section 207.62 of the Commission's rules.

Issued: February 25, 1999.

By order of the Commission.

Donna R. Koehnke,

Secretary.

[FR Doc. 99–5259 Filed 3–2–99; 8:45 am]

BILLING CODE 7020–02–P

INTERNATIONAL TRADE COMMISSION

[Investigations Nos. 731–TA–823–824 (Preliminary)]

Certain Aperture Masks From Japan and Korea

AGENCY: United States International Trade Commission.

ACTION: Institution of antidumping investigations and scheduling of preliminary phase investigations.

SUMMARY: The Commission hereby gives notice of the institution of investigations and commencement of preliminary phase antidumping investigations Nos. 731–TA–823–824 (Preliminary) under section 733(a) of the Tariff Act of 1930 (19 U.S.C. § 1673b(a)) (the Act) to determine whether there is a reasonable indication that an industry in the United States is materially injured or threatened with material injury, or the establishment of an industry in the United States is materially retarded, by reason of imports from Japan and Korea of certain aperture masks,[1] provided for in subheading 8540.91.50 of the Harmonized Tariff Schedule of the United States, that are alleged to be sold in the United States at less than fair value. Unless the Department of Commerce extends the time for initiation pursuant to section 732(c)(1)(B) of the Act (19 U.S.C. § 1673a(c)(1)(B)), the Commission must reach a preliminary determination in antidumping investigations in 45 days, or in this case by April 12, 1999. The Commission's views are due at the Department of Commerce within five business days thereafter, or by April 19, 1999.

For further information concerning the conduct of these investigations and rules of general application, consult the Commission's Rules of Practice and Procedure, part 201, subparts A through E (19 CFR part 201), and part 207, subparts A and B (19 CFR part 207).

EFFECTIVE DATE: February 24, 1999.

FOR FURTHER INFORMATION CONTACT: Elizabeth Haines (202–205–3200), Office of Investigations, U.S. International Trade Commission, 500 E Street SW., Washington, DC 20436. Hearing-impaired persons can obtain information on this matter by contacting the Commission's TDD terminal on 202–205–1810. Persons with mobility impairments who will need special assistance in gaining access to the Commission should contact the Office of the Secretary at 202–205–2000. General information concerning the Commission may also be obtained by accessing its internet server (http://www.usitc.gov).

SUPPLEMENTARY INFORMATION:

Background.—These investigations are being instituted in response to a petition filed on February 24, 1999, by Buckbee-Mears Cortland (BMC) Industries, Inc., Minneapolis, MN.

Participation in the investigations and public service list.—Persons (other than petitioners) wishing to participate in the investigations as parties must file an entry of appearance with the Secretary to the Commission, as provided in sections 201.11 and 207.10 of the Commission's rules, not later than seven days after publication of this notice in the **Federal Register**. Industrial users and (if the merchandise under investigation is sold at the retail level) representative consumer organizations have the right to appear as parties in Commission antidumping investigations. The Secretary will prepare a public service list containing the names and addresses of all persons, or their representatives, who are parties to these investigations upon the expiration of the period for filing entries of appearance.

Limited disclosure of business proprietary information (BPI) under an administrative protective order (APO) and BPI service list.—Pursuant to section 207.7(a) of the Commission's rules, the Secretary will make BPI gathered in these investigations available to authorized applicants representing interested parties (as defined in 19 U.S.C. § 1677(9)) who are

[1] The imported products covered by these investigations consist of all sizes and all thicknesses of aperture masks for color television picture tubes (CPTs) made from aluminum killed, open coil annealed steel (decarburized) (''AK steel''), and also known as iron aperture masks for CPTs. Specifically excluded are imports of aperture masks for computer display tubes, aperture masks made from materials other than AK steel (such as invar), and grille masks.

parties to the investigations under the APO issued in the investigation, provided that the application is made not later than seven days after the publication of this notice in the **Federal Register**. A separate service list will be maintained by the Secretary for those parties authorized to receive BPI under the APO.

Conference.—The Commission's Director of Operations has scheduled a conference in connection with these investigations for 9:30 a.m. on March 17, 1999, at the U.S. International Trade Commission Building, 500 E Street SW., Washington, DC. Parties wishing to participate in the conference should contact Elizabeth Haines (202–205–3200) not later than March 15, 1999, to arrange for their appearance. Parties in support of the imposition of antidumping duties in these investigations and parties in opposition to the imposition of such duties will each be collectively allocated one hour within which to make an oral presentation at the conference. A nonparty who has testimony that may aid the Commission's deliberations may request permission to present a short statement at the conference.

Written submissions.—As provided in sections 201.8 and 207.15 of the Commission's rules, any person may submit to the Commission on or before March 22, 1999, a written brief containing information and arguments pertinent to the subject matter of the investigations. Parties may file written testimony in connection with their presentation at the conference no later than three days before the conference. If briefs or written testimony contain BPI, they must conform with the requirements of sections 201.6, 207.3, and 207.7 of the Commission's rules. The Commission's rules do not authorize filing of submissions with the Secretary by facsimile or electronic means.

In accordance with sections 201.16(c) and 207.3 of the rules, each document filed by a party to the investigations must be served on all other parties to the investigations (as identified by either the public or BPI service list), and a certificate of service must be timely filed. The Secretary will not accept a document for filing without a certificate of service.

Authority: These investigations are being conducted under authority of title VII of the Tariff Act of 1930; this notice is published pursuant to section 207.12 of the Commission's rules.

Issued: February 26, 1999.

By order of the Commission.

Donna R. Koehnke,

Secretary.

[FR Doc. 99–5260 Filed 3–2–99; 8:45 am]

BILLING CODE 7020–02–P

INTERNATIONAL TRADE COMMISSION

[Investigation No. 731-TA–149 (Review)]

Barium Chloride From China

Determination

On the basis of the record [1] developed in the subject five-year review, the United States International Trade Commission determines,[2] pursuant to section 751(c) of the Tariff Act of 1930 (19 U.S.C. 1675(c)) (the Act), that revocation of the antidumping duty order on barium chloride from China would be likely to lead to continuation or recurrence of material injury to an industry in the United States within a reasonably foreseeable time.

Background

The Commission instituted this review on October 1, 1998, (63 F.R. 52750) and determined on January 7, 1999, that it would conduct an expedited review (64 F.R. 3308, Jan. 21, 1999).

The Commission is scheduled to transmit its determination in this investigation to the Secretary of Commerce on March 4, 1999. The views of the Commission will be contained in USITC Publication 3163 (March 1999), entitled Barium Chloride from China: Investigation No. 731-TA–149 (Review).

Issued: February 24, 1999.

By order of the Commission.

Donna R. Koehnke,

Secretary.

[FR Doc. 99–5258 Filed 3–2–99; 8:45 am]

BILLING CODE 7020–02–P

INTERNATIONAL TRADE COMMISSION

[Investigation No. 731–TA–539–A (Final)]

Uranium From Kazakhstan

AGENCY: United States International Trade Commission.

ACTION: Continuance and scheduling of the final phase of an antidumping investigation.

SUMMARY: The Commission hereby gives notice of the continuance and scheduling of the final phase of antidumping investigation No. 731–TA–539–A (Final) under section 735(b) of the Tariff Act of 1930 (19 U.S.C. § 1673d(b)) (the Act) to determine whether an industry in the United States is materially injured or threatened with material injury, or the establishment of an industry in the United States is materially retarded, by reason of less-than-fair-value imports from Kazakhstan of uranium, provided for in subheadings 2612.10.00, 2844.10.10, 2844.10.20, 2844.10.50, and 2844.20.00 of the Harmonized Tariff Schedule of the United States.[1]

For further information concerning the conduct of this phase of the investigation, hearing procedures, and rules of general application, consult the Commission's Rules of Practice and Procedure, part 201, subparts A through E (19 CFR part 201), and part 207, subparts A and C (19 CFR part 207).

EFFECTIVE DATE: January 15, 1999.

FOR FURTHER INFORMATION CONTACT: Larry Reavis (202–205–3185), Office of Investigations, U.S. International Trade Commission, 500 E Street SW, Washington, DC 20436. Hearing-impaired persons can obtain information on this matter by contacting the Commission's TDD terminal on 202–205–1810. Persons with mobility impairments who will need special assistance in gaining access to the Commission should contact the Office of the Secretary at 202–205–2000. General information concerning the Commission may also be obtained by accessing its internet server (http://www.usitc.gov).

SUPPLEMENTARY INFORMATION:

Background

The final phase of this investigation is being continued and scheduled in response to the Department of Commerce's notice that it is resuming its antidumping investigation (64 FR 2877, January 19, 1999) as a result of the Government of Kazakhstan's termination of its suspension agreement on uranium. The original investigation was initiated on November 8, 1991 (pursuant to a petition filed by the Ad Hoc Committee of Domestic Uranium

---

[1] The record is defined in sec. 207.2(f) of the Commission's Rules of Practice and Procedure (19 CFR § 207.2(f)).

[2] Commissioner Crawford dissenting.

[1] For purposes of this investigation, Commerce has defined the subject merchandise as ''natural uranium in the form of uranium ores and concentrates; natural uranium metal and natural uranium compounds; alloys, dispersions (including cermets), ceramic products and mixtures containing natural uranium or natural uranium compounds; uranium enriched in U^{235} and its compounds; alloys, dispersions (including cermets), ceramic products, and mixtures containing uranium enriched in U^{235} or compounds or uranium enriched in U^{235}. HEU [highly enriched uranium] is included in the scope of the investigation.''

Producers and the Oil, Chemical, and Atomic Workers International Union), and was continued against the Republic of Kazakhstan after the dissolution of the Soviet Union. The suspension agreement with respect to Kazakhstan was in effect from October 16, 1992, to January 11, 1999. The scheduling of the Commission's investigation is consistent with Commerce's postponement of its final determination until June 3, 1999.

Participation in the Investigation and Public Service List

Persons, including industrial users of the subject merchandise and, if the merchandise is sold at the retail level, representative consumer organizations, wishing to participate in the final phase of this investigation as parties must file an entry of appearance with the Secretary to the Commission, as provided in section 201.11 of the Commission's rules, no later than 21 days prior to the hearing date specified in this notice. A party that filed a notice of appearance during the preliminary phase of the investigation need not file an additional notice of appearance during this final phase. The Secretary will maintain a public service list containing the names and addresses of all persons, or their representatives, who are parties to the investigation.

Limited Disclosure of Business Proprietary Information (BPI) Under an Administrative Protective Order (APO) and BPI Service List

Pursuant to section 207.7(a) of the Commission's rules, the Secretary will make BPI gathered in the final phase of this investigation available to authorized applicants under the APO issued in the investigation, provided that the application is made no later than 21 days prior to the hearing date specified in this notice. Authorized applicants must represent interested parties, as defined by 19 U.S.C. § 1677(9), who are parties to the investigation. A party granted access to BPI in the preliminary phase of the investigation need not reapply for such access. A separate service list will be maintained by the Secretary for those parties authorized to receive BPI under the APO.

Staff Report

The prehearing staff report in the final phase of this investigation will be placed in the nonpublic record on May 25, 1999, and a public version will be issued thereafter, pursuant to section 207.22 of the Commission's rules.

Hearing

The Commission will hold a hearing in connection with the final phase of this investigation beginning at 9:30 a.m. on June 9, 1999, at the U.S. International Trade Commission Building. Requests to appear at the hearing should be filed in writing with the Secretary to the Commission on or before May 31, 1999. A nonparty who has testimony that may aid the Commission's deliberations may request permission to present a short statement at the hearing. All parties and nonparties desiring to appear at the hearing and make oral presentations should attend a prehearing conference to be held at 9:30 a.m. on June 2, 1999, at the U.S. International Trade Commission Building. Oral testimony and written materials to be submitted at the public hearing are governed by sections 201.6(b)(2), 201.13(f), and 207.24 of the Commission's rules. Parties must submit any request to present a portion of their hearing testimony *in camera* no later than 7 days prior to the date of the hearing.

Written Submissions

Each party who is an interested party shall submit a prehearing brief to the Commission. Prehearing briefs must conform with the provisions of section 207.23 of the Commission's rules; the deadline for filing is June 1, 1999. Parties may also file written testimony in connection with their presentation at the hearing, as provided in section 207.24 of the Commission's rules, and posthearing briefs, which must conform with the provisions of section 207.25 of the Commission's rules. The deadline for filing posthearing briefs is June 17, 1999; witness testimony must be filed no later than three days before the hearing. In addition, any person who has not entered an appearance as a party to the investigation may submit a written statement of information pertinent to the subject of the investigation on or before June 17, 1999. On July 1, 1999, the Commission will make available to parties all information on which they have not had an opportunity to comment. Parties may submit final comments on this information on or before July 6, 1999, but such final comments must not contain new factual information and must otherwise comply with section 207.30 of the Commission's rules. All written submissions must conform with the provisions of section 201.8 of the Commission's rules; any submissions that contain BPI must also conform with the requirements of sections 201.6, 207.3, and 207.7 of the Commission's rules. The Commission's rules do not authorize filing of submissions with the Secretary by facsimile or electronic means.

In accordance with sections 201.16(c) and 207.3 of the Commission's rules, each document filed by a party to the investigation must be served on all other parties to the investigation (as identified by either the public or BPI service list), and a certificate of service must be timely filed. The Secretary will not accept a document for filing without a certificate of service.

Authority: This investigation is being conducted under authority of title VII of the Tariff Act of 1930; this notice is published pursuant to section 207.21 of the Commission's rules.

Issued: February 26, 1999.

By order of the Commission.

Donna R. Koehnke,

Secretary.

[FR Doc. 99–5261 Filed 3–1–99; 8:45 am]

BILLING CODE 7020–02–P

DEPARTMENT OF JUSTICE

Executive Office for Immigration Review; Agency Information Collection Activities: Extension of a Currently Approved Collection; Comment Request

ACTION: Notice of information collection under review; Application for cancellation of removal.

The extension of the currently approved information collection is published to obtain comments from the public and affected agencies. Comments are encouraged and will be accepted until May 3, 1999.

Request written comments and suggestions from the public and affected agencies concerning the extension of the collection of information. Your comments should address one or more of the following four points:

(1) Evaluate whether the collection of information is necessary for the proper performance of the functions of the agency, including whether the information will have practical utility;

(2) Evaluate the accuracy of the agency's estimate of the burden of the collection of information, including the validity of the methodology and assumptions used;

(3) Enhance the quality, utility, and clarity of the information to be collected; and

(4) Minimize the burden of the collection of information on those who are to respond, including through the use of appropriate automated, electronic, mechanical, or other technological collection techniques or

other forms of information technology, e.g., permitting electronic submission of responses.

If you have additional comments, suggestions, or need a copy of the information collection instrument with instructions, or additional information, please contact Margaret M. Philbin, 703–305–0470, General Counsel, Executive Office for Immigration Review, U.S. Department of Justice, Suite 2400, 5107 Leesburg Pike, Falls Church, Virginia 22041. Additionally, comments and/or suggestions regarding the item(s) contained in this notice, especially regarding the estimated public burden and associated response time may also be directed to Ms. Philbin.

Overview of This Information Collection

(1) *Type of Information Collection:* Extension of a Currently Approved Collection.

(2) *Title of the Form/Collection:* Application for Cancellation of Removal.

(3) *Agency form number, if any, and the applicable component of the Department of Justice sponsoring the collection:* Form EOIR–42, Executive Office for Immigration Review, U.S. Department of Justice.

(4) *Affected public who will be asked to respond, as well as a brief abstract:* Individual aliens determined to be removable from the United States. This information collection is necessary to determine the statutory eligibility of individual aliens who have been determined to be removable from the United States for cancellation of their removal, as well as to provide information relevant to a favorable exercise of discretion in their case.

(5) *An estimate of the total number of respondents and the amount of time estimated for an average respondent to respond:* 1640 responses per year at 5 hours, 45 minutes per response.

(6) *An estimate of the total public burden (in hours) associated with the collection:* 9,430 annual burden hours.

If additional information is required contact: Mr. Robert B. Briggs, Clearance Officer, United States Department of Justice, Information Management and Security Staff, Justice Management Division, Suite 850, Washington Center, 1001 G Street, NW, Washington, DC 20530.

Dated: February 25, 1999.

Robert B. Briggs,

Clearance Officer, U.S. Department of Justice.

[FR Doc. 99–5135 Filed 3–2–99; 8:45 am]

BILLING CODE 4410–30–M

DEPARTMENT OF JUSTICE

Executive Office for Immigration Review; Agency Information Collection Activities: Reinstatement, Without Change, of a Previously Approved Collection for Which Approval Has Expired; Comment Request

ACTION: Notice of information collection under review; Change of address form.

The reinstatement, without change, of a previously approved collection for which approval has expired is published to obtain comments from the public and affected agencies. Comments are encouraged and will be accepted until May 3, 1999.

Request written comments and suggestions from the public and affected agencies concerning the collection of information. Your comments should address one or more of the following four points:

(1) Evaluate whether the collection of information is necessary for the proper performance of the functions of the agency, including whether the information will have practical utility;

(2) Evaluate the accuracy of the agency's estimate of the burden of the collection of information, including the validity of the methodology and assumptions used;

(3) Enhance the quality, utility, and clarity of the information to be collected; and

(4) Minimize the burden of the collection of information on those who are to respond, including through the use of appropriate automated, electronic, mechanical, or other technological collection techniques or other forms of information technology, e.g. permitting electronic submission of responses.

If you have additional comments, suggestions, or need a copy of the information collection instrument with instructions, or additional information, please contact Margaret M. Philbin, 703–305–0470, General Counsel, Executive Office for Immigration Review, U.S. Department of Justice, Suite 2400, 5107 Leesburg Pike, Falls Church, Virginia 22041. Additionally, comments and/or suggestions regarding the item(s) contained in this notice, especially regarding the estimated public burden and associated response time may also be directed to Ms. Philbin.

Overview of this information collection:

(1) *Type of Information Collection:* Reinstatement, Without Change, of a Previously Approved Collection for Which Approval has Expired.

(2) *Title of the Form/Collection:* Change of Address Form.

(3) *Agency form number, if any, and the applicable component of the Department of Justice sponsoring the collection:* Form EOIR–33, Executive Office for Immigration Review, U.S. Department of Justice.

(4) *Affected public who will be asked to respond, as well as a brief abstract:* Individuals in immigration proceedings are statutorily required to report any change of address. The information in the form is used by the Immigration Courts and the Board of Immigration Appeals to ascertain where to send the notice of the next administrative action or notice of any decision which have been rendered in an individual's case.

(5) *An estimate of the total number of respondents and the amount of time estimate for an average respondent to respond:* 15,000 responses per year at 15 minutes per response.

(6) *An estimate of the total public burden (in hours) associated with the collection:* 600 annual burden hours.

If additional information is required contact: Mr. Robert B. Briggs, Clearance Officer, United States Department of Justice, Information Management and Security Staff, Justice Management Division, Suite 850, Washington Center, 1001 G Street, NW, Washington, DC 20530.

Dated: February 25, 1999.

Robert B. Briggs,

Clearance Officer, U.S. Department of Justice.

[FR Doc. 99–5136 Filed 3–2–99; 8:45 am]

BILLING CODE 4410–30–M

DEPARTMENT OF JUSTICE

Executive Office for Immigration Review; Agency Information Collection Activities: Reinstatement, Without Change, of a Previously Approved Collection for Which Approval Has Expired; Comment Request

ACTION: Notice of information collection under review; Appeal fee waiver request.

The reinstatement, without change, of a previously approved collection for which approval has expired is published to obtain comments from the public and affected agencies. Comments are encouraged and will be accepted until May 3, 1999.

Request written comments and suggestions from the public and affected agencies concerning the reinstatement of the collection of information. Your comments should address one or more of the following four points:

(1) Evaluate whether the collection of information is necessary for the proper performance of the functions of the agency, including whether the information will have practical utility;

(2) Evaluate the accuracy of the agency's estimate of the burden of the collection of information, including the validity of the methodology and assumptions used;

(3) Enhance the quality, utility, and clarity of the information to be collected; and

(4) Minimize the burden of the collection of information on those who are to respond, including through the use of appropriate automated, electronic, mechanical, or other technological collection techniques or other forms of information technology, e.g. permitting electronic submission of responses.

If you have additional comments, suggestions, or need a copy of the information collection instrument with instructions, or additional information, please contact Margaret M. Philbin, 703–305–0470, General Counsel, Executive Office for Immigration Review, U.S. Department of Justice, Suite 2400, 5107 Leesburg Pike, Falls Church, Virginia 22041. Additionally, comments and/or suggestions regarding the item(s) contained in this notice, especially regarding the estimated public burden and associated response time may also be directed to Ms. Philbin.

Overview of This Information Collection

(1) *Type of Information Collection:* Reinstatement, Without Change, of a Previously Approved Collection for Which Approval has Expired.

(2) *Title of the Form/Collection:* Appeal Fee Waiver Request.

(3) *Agency form number, if any, and the applicable component of the Department of Justice sponsoring the collection:* Form EOIR–26A, Executive Office for Immigration Review, U.S. Department of Justice.

(4) *Affected public who will be asked to respond, as well as a brief abstract:* Individual aliens appearing before the Board of Immigration Appeals (BIA). This form is used to apply for a waiver of the fee required to properly file an appeal with the BIA.

(5) *An estimate of the total number of respondents and the amount of time estimated for an average respondent to respond:* 6,100 responses per year at 1 hour per response.

(6) *An estimate of the total public burden (in hours) associated with the collection:* 6,100 annual burden hours.

If additional information is required contact: Mr. Robert B. Briggs, Clearance Officer, United States Department of Justice, Information Management and Security Staff, Justice Management Division, Suite 850, Washington Center, 1001 G Street, NW., Washington, DC 20530.

Dated: February 25, 1999.

Robert B. Briggs,

Clearance Officer, U.S. Department of Justice.

[FR Doc. 99–5137 Filed 3–2–99; 8:45 am]

BILLING CODE 4410–30–M

DEPARTMENT OF JUSTICE

Executive Office for Immigration Review; Agency Information Collection Activities: Reinstatement, Without Change, of a Previously Approved Collection for Which Approval has Expired; Comment Request

ACTION: Notice of information collection under review; notice of appeal of the Board of Immigration Appeals of decision of immigration judge.

The reinstatement, without change, of a previously approved collection for which approval has expired is published to obtain comments from the public and affected agencies. Comments are encouraged and will be accepted until May 3, 1999.

Request written comments and suggestions from the public and affected agencies concering the reinstatement of the collection of information. Your comments should address one or more of the following four points:

(1) Evaluate whether the collection of information is necessary for the proper performance of the functions of the agency, including whether the information will have practical utility;

(2) Evaluate the accuracy of the agency's estimate of the burden of the collection of information, including the validity of the methodology and assumptions used;

(3) Enhance the quality, utility, and clarity of the information to be collected; and

(4) Minimize the burden of the collection of information on those who are to respond, including through the use of appropriate automated, electronic, mechanical, or other technological collection techniques or other forms of information technology, e.g. permitting electronic submission of responses.

If you have additional comments, suggestions, or need a copy of the information collection instrument with instructions, or additional information, please contact Margaret M. Philbin, 703–305–0470, General Counsel, Executive Office for Immigration Review, U.S. Department of Justice, Suite 2400, 5107 Leesburg Pike, Falls Church, Virginia 22041. Additionally, comments and/or suggestions regarding the item(s) contained in this notice, especially regarding the estimated public burden and associated response time may also be directed to Ms. Philbin.

Overview of This Information Collection

(1) *Type of Information Collection:* Reinstatement, Without Change, of a Previously Approved Collection for Which Approval has Expired.

(2) *Title of the Form/Collection:* Notice of Appeal to the Board of Immigration Appeals of Decision of Immigration Judge.

(3) *Agency form number, if any, and the applicable component of the Department of Justice sponsoring the collection:* Form EOIR–26, Executive Office for Immigration Review, U.S. Department of Justice.

(4) *Affected public who will be asked to respond, as well as a brief abstract:* A party (either individual aliens or the Immigration and Naturalization Service) who disagrees with the decision of an Immigration Judge may request a final decision of the Attorney General. Review of such appeals has been delegated to the Board of Immigration Appeals (BIA). This information collection is used to consider appeals to the BIA.

(5) *An estimate of the total number of respondents and the amount of time estimated for an average respondent to respond:* 27,000 responses per year at 30 minutes per response.

(6) *An estimate of the total public burden (in hours) associated with the collection:* 13,500 annual burden hours.

If additional information is required contact: Mr. Robert B. Briggs, Clearance Officer, United States Department of Justice, Information Management and Security Staff, Justice Management Division, Suite 850, Washington Center, 1001 G Street, NW, Washington, DC 20530.

Dated: February 25, 1999.

Robert B. Briggs,

Clearance Officer, U.S. Department of Justice.

[FR Doc. 99–5138 Filed 3–2–99; 8:45 am]

BILLING CODE 4410–30–M

DEPARTMENT OF JUSTICE

Office of Community Oriented Policing Services; Agency Information Collection Activities: Proposed Collection; Comment Request

ACTION: Notice of Information Collection Under Review; New Collection Regional COPS Count Survey.

The Department of Justice, Office of Community Oriented Policing Services, has submitted the following information collection request to the Office Management and Budget (OMB) for review and clearance in accordance with emergency review procedures of the Paperwork Reduction Act of 1995. OMB approval has been requested by March 3, 1999. The proposed information collection is published to obtain comments from the public and affected agencies. If granted, the emergency approval is only valid for 180 days. Comments should be directed to OMB, Office of Information Regulation Affairs, Department of Justice Desk Officer, Washington, DC 20530.

During the first 60 days of this same review period, a regular review of this information collection is also being undertaken. All comments and suggestions, or questions regarding additional information, to include obtaining a copy of the proposed information collection instrument with instructions, should be directed to Marcia O. Samuels, COPS Count Project Manager, Office of Community Oriented Policing Services, Grant Monitoring Division, 1100 Vermont Avenue, N.W., Washington, D.C. 20530, or via facsimile at (202) 633–1293.

Request written comments and suggestions from the public and affected agencies concerning the proposed collection of information. Your comments should address one or more of the following four points:

(1) Evaluate whether the proposed collection of information is necessary for the proper performance of the functions of the agency, including whether the information will have practical utility;

(2) Evaluate the accuracy of the agency's estimate of the burden of the proposed collection of information, including the validity of the methodology and assumptions used;

(3) Enhance the quality, utility, and clarity of the information to be collected; and

(4) Minimize the burden of the collection of information on those who are to respond, including through the use of appropriate automated, electronic, mechanical, or other technological collection techniques or other forms of information technology, e.g., permitting electronic submission of responses.

Overview of this collection:

(1) *Type of Information Collection:* New collection.

(2) *Title of the Form/Collection:* COPS Count Survey.

(3) *Agency form number, if any, and the applicable component of the Department of Justice sponsoring the collection:* Form: COPS 31/01. Office of Community Oriented Policing Services, U.S. Department of Justice.

(4) *Affected public who will be asked or required to respond, as well as a brief abstract:* The COPS Count Project surveys agencies who currently have been awarded a Hiring and/or MORE grant from the COPS Office. The information collected provides an accurate up to date account on the status of officers hired/redeployed.

(5) *An estimate of the total number of respondents and the amount of time estimated for an average respondent to respond:* Estimated number of respondents: 10,813. Estimated time for average respondent to respond: .75 (15 min. × 3 times per year = 45 min.)

(6) *An estimate of the total of public burden (in hours) associated with the collection:* Approximately 8,109.75 annual burden hours.

If additional information is required contact: Mrs. Brenda E. Dyer, Deputy Clearance Office, United States Department of Justice, Information Management and Security Staff, Justice Management Division, Suite 850, Washington Center, 1001 G Street, NW, Washington, DC 20530.

Dated: February 25, 1999.

Brenda E. Dyer,

Department Deputy Clearance Officer, United States Department of Justice.

[FR Doc. 99–5214 Filed 3–2–99; 8:45 am]

BILLING CODE 4410–AT–M

DEPARTMENT OF JUSTICE

Office of Community Oriented Policing Services; Agency Information Collection Activities; Proposed Collection; Comment Request

ACTION: Notice of Information Collection Under Review; National Survey of Police Executives, District Commanders and Agencies.

Office of Management and Budget (OMB) approval is being sought for the information collection listed below. This proposed information collection was previously published in the **Federal Register** on August 12, 1998 to allow 60 days for public comment. Emergency OMB approval has been requested by March 3, 1999.

The purpose of this notice is to allow an additional 30 days for public comments from the date listed at the top of this page in the **Federal Register**. This process is conducted in accordance with 5 Code of Federal Regulation, Part 1320.10. Written comments and/or suggestions regarding the item(s) contained in this notice, especially regarding the estimated public burden and associated response time, should be directed to the Office of Management and Budget, Office of Regulatory Affairs, Attention: Department of Justice Desk Officer, Washington, DC, 20530. Additionally, comments may be submitted to OMB via facsimile to 202–395–7285. Comments may also be submitted to the Department of Justice (DOJ), Justice Management Division, Information Management and Security Staff, Attention: Department Clearance Officer, Suite 850, 1001 G Street, NW, Washington, DC, 20530. Additionally, comments may be submitted to DOJ via facsimile to 202–514–1534. Written comments may also be submitted to the COPS Office, PPSE Division, 1100 Vermont Avenue, N.W., Washington, D.C. 20530, or via facsimile at (202) 633–1386.

Written comments and suggestions from the public and affected agencies should address one or more of the following points: (1) evaluate whether the proposed collection of information is necessary for the proper performance of the functions of the agency/component, including whether the information will have practical utility;

(2) evaluate the accuracy of the agency's/component's estimate of the burden of the proposed collection of information, including the validity of the methodology and assumptions used;

(3) enhance the quality, utility, and clarity of the information to be collected; and

(4) minimize the burden of the collection of information on those who are to respond, including through the use of appropriate automated, electronic, mechanical, or other technological collection techniques or other forms of information technology, e.g., permitting electronic submission of responses.

The proposed collection is listed below:

(1) *Type of information collection.* New collection.

(2) *The title of the form/collection.* National Survey of Police Executives, District Commanders and Agencies

(3) *The agency form number, if any, and the applicable component of the Department sponsoring the collection.*

Form: COPS 28/01. Office of Community Oriented Policing Services, United States Department of Justice.

(4) *Affected public who will be asked or required to respond, as well as a brief abstract.* A sample of local law enforcement agency heads and precinct/district commanders that have received grant funding from the COPS Office will be surveyed regarding the nature and extent of community policing implementation in their agencies and precincts/districts.

To uphold its mandate, the COPS Office has awarded hiring and redeployment grants, innovative grants, and training grants to over 10,000 law enforcement agencies nationwide. While the COPS Office has made significant strides in funding officers it is important to consider the 1994 Crime Bill and the emergence of COPS in a long-term perspective. The proposed survey aims to answer questions regarding the nature and extent of community policing implementation across the United States.

COPS data and prior national surveys of community policing implementation are limited in their capacity to describe how extensive community policing implementation is. In addition, existing data sets do not permit exploration of the likelihood that implementation of community policing varies within jurisdictions, particularly large ones that are decentralized to precinct or district levels. This factor is particularly important because a key element in much of the community policing reform literature is the importance of delegating decision making to the lowest level in the organization. The National Survey of Police Executives, District Commanders and Agencies will be able to capture variations within a jurisdiction.

Surveys will incorporate elements that the COPS Office has identified as key components of community policing and will draw upon prior surveys, other literature, and prior knowledge to develop a comprehensive listing of community policing elements. Questions will provide more precise information about the extent to which each element is implemented.

(5) *An estimate of the total number of respondents and the amount of time estimated for an average respondent to respond:* This collection is being conducted in two phases as a pilot survey and a larger follow-up survey. Two sections, Section A and Section B will be utilized; a total of approximately 6700 respondents will be surveyed. Estimated time to complete Section A is 20 minutes with no preparation time; estimated time to complete Section B is 1.5 hours including preparation time.

(6) *An estimate of the total public burden (in hours) associated with the collection.* Approximately 6141.6 hours.

Public comment on this proposed information collection is strongly encouraged.

Dated: February 26, 1999.

Brenda E. Dyer,

Department Deputy Clearance Officer, Department of Justice.

[FR Doc. 99–5215 Filed 3–2–99; 8:45 am]

BILLING CODE 4410–AT–M

DEPARTMENT OF JUSTICE

Antitrust Division

International Competition Policy Advisory Committee (ICPAC) Meeting

The International Competition Policy Advisory Committee (the ''Advisory Committee'') will hold its fourth meeting on March 17, 1999. The Advisory Committee was established by the Department of Justice to provide advice regarding issues relating to international competition policy; specifically, how best to cooperate with foreign authorities to eliminate international anticompetitive cartel agreements, how best to coordinate United States' and foreign antitrust enforcement efforts in the review of multijurisdictional mergers, and how best to address issues that interface international trade and competition policy concerns. The meeting will be held at The Carnegie Endowment for International Peace, Root Conference Room, 1779 Massachusetts Avenue, N.W., Washington, D.C. 20036 and will begin at 1:30 p.m. EST and end at approximately 4:30 p.m. The agenda for the meeting will be as follows:

1. Multijurisdictional Merger Review
2. Trade and Competition Policy Interface Issues
3. Enforcement Cooperation
4. Work Program: Next Steps

Attendance is open to the interested public, limited by the availability of space. Persons needing special assistance, such as sign language interpretation or other special accommodations, should notify the contact person listed below as soon as possible. Members of the public may submit written statements by mail, electronic mail, or facsimile at any time before or after the meeting to the contact person listed below for consideration by the Advisory Committee. All written submissions will be included in the public record of the Advisory Committee. Oral statements from the public will not be solicited or accepted at this meeting. For further information contact: Merit Janow, c/o Marianne Pak, U.S. Department of Justice, Antitrust Division, 601 D Street, N.W., Room 10011, Washington, D.C. 20530, Telephone: (202) 353–9074, Facsimile: (202) 353–9985, Electronic mail: icpac.atr@usdoj.gov.

Merit E. Janow,

Executive Director, International Competition Policy Advisory Committee.

[FR Doc. 99–5149 Filed 3–2–99; 8:45 am]

BILLING CODE 4410–11–M

DEPARTMENT OF JUSTICE

Foreign Claims Settlement Commission

[F.C.S.C. Meeting Notice No. 3–99]

Sunshine Act Meeting

The Foreign Claims Settlement Commission, pursuant to its regulations (45 CFR Part 504) and the Government in the Sunshine Act (5 U.S.C. 552b), hereby gives notice in regard to the scheduling of meetings and oral hearings for the transaction of Commission business and other matters specified, as follows:

Date and Time: Friday, March 12, 1999, 2:00 p.m.

Subject Matter: Hearings on the Record on Objections to Proposed Decisions on claims against Albania, as follows:

Claim Nos. ALB–318 Fotini Kales
ALB–319 Pauline Kostakos
ALB–322 Eleftheria Demetrios

Status: Open.

All meetings are held at the Foreign claims Settlement Commission, 600 E Street, N.W., Washington, DC. Requests for information, or advance notices of intention to observe an open meeting, may be directed to: Administrative Officer, Foreign Claims Settlement Commission, 600 E Street, NW., Room 6002, Washington, DC 20579. Telephone: (202) 616–6988.

Dated at Washington, DC, March 1, 1999.

Judith H. Lock,

Administrative Officer.

[FR Doc. 99–5398 Filed 3–1–99; 2:43 pm]

BILLING CODE 4410–BA–P

DEPARTMENT OF LABOR

Employment and Training Administration

[TA–W–35,521]

Agip Petroleum Company, Houston, Texas; Notice of Termination of Investigation

Pursuant to Section 221 of the Trade Act of 1974, an investigation was initiated on January 25, 1999 in response to a worker petition which was filed on behalf of workers at Agip Petroleum Company, Houston, Texas.

Two of the three petitioners were separated from the subject firm more than a year prior to the date of the petition. Section 223 of the Act specifies that no certification may apply to any worker whose last separation occurred more than a year before the date of the petition. Consequently, further investigation in this case would serve no purpose, and the investigation has been terminated.

Signed at Washington, D.C. this 10th day of February 1999.

Grant D. Beale,

Acting Director, Office of Trade Adjustment Assistance.

[FR Doc. 99–5180 Filed 3–2–99; 8:45 am]

BILLING CODE 4510–30–M

DEPARTMENT OF LABOR

Employment and Training Administration

[TA–W–35,459]

Baker Oil tools, Houston, Texas; Notice of Termination of Investigation

Pursuant to Section 221 of the Trade Act of 1974, an investigation was initiated on January 4, 1999, in response to a worker petition which was filed on behalf of workers at Baker Oil Tools, Houston, Texas.

All workers of the subject firm are covered under a petition investigation in process for TA–W–35,414. Consequently, further investigation in this case would serve no purpose, and the investigation has been terminated.

Signed at Washington, D.C. this 16th day of February 1999.

Grant D. Beale,

Acting Director, Office of Trade Adjustment Assistance.

[FR Doc. 99–5189 Filed 3–2–99; 8:45 am]

BILLING CODE 4510–30–M

DEPARTMENT OF LABOR

Employment and Training Administration

[TA–W–35,602]

Becton Dickinson, Hancock, New York; Notice of Termination of Investigation

Pursuant to Section 221 of the Trade Act of 1974, an investigation was initiated on February 8, 1999, in response to a petition filed on the same date on behalf of workers at Becton Dickinson, Hancock, New York.

The company official submitting the petition has requested that the petition be withdrawn at this time. Consequently, further investigation in this case would serve no purpose, and the investigation has been terminated.

Signed in Washington, D.C. this 8th day of February, 1999.

Grant D. Beale,

Acting Director, Office of Trade Adjustment Assistance.

[FR Doc. 99–5190 Filed 3–2–99; 8:45 am]

BILLING CODE 4510–30–M

DEPARTMENT OF LABOR

Employment and Training Administration

Investigations Regarding Certifications of Eligibility To Apply for Worker Adjustment Assistance

Petitions have been filed with the Secretary of Labor under Section 221 (a) of the Trade Act of 1974 (''the Act'') and are identified in the Appendix to this notice. Upon receipt of these petitions, the Acting Director of the Office of Trade Adjustment Assistance, Employment and Training Administration, has instituted investigations pursuant to Section 221 (a) of the Act.

The purpose of each of the investigations is to determine whether the workers are eligible to apply for adjustment assistance under Title II, Chapter 2, of the Act. The investigations will further relate, as appropriate, to the determination of the date on which total or partial separations began or threatened to begin and the subdivision of the firm involved.

The petitioners or any other persons showing a substantial interest in the subject matter of the investigations may request a public hearing, provided such request is filed in writing with the Acting Director, Office of Trade Adjustment Assistance, at the address show below, not later than March 15, 1999.

Interested persons are invited to submit written comments regarding the subject matter of the investigations to the Acting Director, Office of Trade Adjustment Assistance, at the address shown below, not later than March 15, 1999.

The petitions filed in this case are available for inspection at the Office of the Acting Director, Office of Trade Adjustment Assistance, Employment and Training Administration, U.S. Department of Labor, 200 Constitution Avenue, N.W., Washington, D.C. 20210.

Signed at Washington, D.C. this 1st day of February, 1999.

Grant D. Beale,

Acting Director, Office of Trade Adjustment Assistance.

APPENDIX

[Petitions Instituted on 02/01/99]

TA–W	Subject firm (petitioners)	Location	Date of petition	Product(s)
35,545	Camp Sports, Inc. (Co.)	Oneonta, AL	01/14/99	Men's & Ladies' Sportwear.
35,546	Cross Creek Apparel (Co.)	N. Wilkesboro, NC	01/12/99	Jersey & Fleece Knitted Fabric.
35,547	UCAR Carbon Co., Inc. (Wkrs)	Columbia, TN	01/09/99	Graphite Electrodes.
35,548	Mill Rite Farm (Co.)	Albany, OR	01/08/99	Grass Pellets (Animal Feed).
35,549	Lion Apparel (Wkrs)	Williamsburg, KY	01/08/99	Uniform Shirts & Trousers.
35,550	Key Energy (Wkrs)	Midland, TX	01/11/99	Oil.
35,551	Coates ASI, Inc. (Wkrs)	Phoenix, AZ	01/18/99	Wet Processing Equipment.
35,552	Mountain West Colorado (Wkrs)	Kamiah, ID	01/08/99	Western Cedar Bags.
35,553	Mitchell's Oilfield (Wkrs)	Sidney, MT	01/14/99	Oilfield Services.
35,554	Lynx Petroleum Consultant (Co.)	Hobbs, NM	01/13/99	Oil.

APPENDIX—Continued

[Petitions Instituted on 02/01/99]

TA–W	Subject firm (petitioners)	Location	Date of petition	Product(s)
35,555	Lowrance Electronics (Co.)	Tulsa, OK	01/13/99	Stellite Navigation Devices.
35,556	General Electric Fanuc (Wkrs)	Charlotteville, VA	12/30/98	Computer Numerical Control Systems.
35,557	Freeport McMoRan (Wkrs)	Pecos, TX	01/12/99	Mine Sulphur.
35,558	Bi-Petro, Inc. (Co.)	Springfield, IL	01/14/99	Crude Oil.
35,559	Ariana Inc., (UNITE)	Hoboken, NJ	01/15/99	Ladies' Coats.
35,560	Dyna Craft Industries (Wkrs)	Murrysville, PA	01/14/99	Lead Frames.
35,561	Fashionland, Inc. (UNITE)	Jersey City, NJ	01/20/99	Kids Clothes.
35,562	Howard Korenstein Spts (UNITE)	Newark, NJ	01/20/99	Lingerie.
35,563	Cutout's Inc. (Wkrs)	Fall River, MA	01/20/99	Men's & Ladies' Coats.
35,564	Guilford Mills, Inc. (Co.)	Herkimer, NY	01/14/99	Circular Knit Jersey Sheet Sets.
35,565	Knoedler Manufacturers (Co.)	Battle Creek, MI	01/11/99	Air Ride Truck Seats.
35,556	H and H Strandflex (Co.)	Oriskany, NY	01/15/99	Steel, Brass & Stainless Steel Wire Rope.
35,567	Boise Cascade Corp. (Wkrs)	Portland, OR	01/14/99	White Office Paper.
35,568	Nakano USA, Inc. (Co.)	St. Marys, OH	01/19/99	Bicycle Wheel Hubs.
35,569	Missouri Valley Perforate (Co.)	Kenmare, ND	01/17/99	Oilfield Services.
35,570	National Standard (Wkrs)	Corbin, KY	01/17/99	Wire Products—Airbags, Weaving, Slip.
35,571	Double EE Service, Inc. (Wkrs)	Westhope, ND	01/14/99	Oil, Gas Service & Supply.
35,572	Don Nan Pump and Supply (Wkrs)	Midland, TX	01/14/99	Oilwell Pumps.
35,573	De La Rue Cash Systems (Wkrs)	Bensalem, PA	01/08/99	Currency Counting Machinery.
35,574	Permian Anchors, Inc. (Wkrs)	Odessa, TX	01/18/99	Oilfield Services.
35,575	Jamesbury (Wkrs)	El Paso, TX	01/19/99	Industrial Valves.
35,576	ASARCO (Co.)	El Paso, TX	01/14/99	Copper Refinery.
35,577	Leesburg Yarn Mills (Wkrs)	Leesburg, AL	01/11/99	Cloth for T-Shirts.
35,578	Rockwell/Dodge (USWA)	Mishawaka, IN	01/08/99	Gray Iron Castings.
35,579	Mitchell Energy and Dev. (Co.)	The Woodlands, TX	01/12/99	Exploration & Drilling Services.
35,580	United Technologies (Wkrs)	Brownsville, TX	01/20/99	Motor Parts.
35,581	Oshkosh B'Gosh (UFCW)	Liberty, KY	01/20/99	Children's Clothes.
35,582	Stevens International (Wkrs)	Hamilton, OH	01/22/99	Printing Equipment.
35,583	Branch Cheese/Saputo (IBT)	Branch, WI	01/18/99	Bulk Cheese.
35,584	Femsco Industries (Co.)	San Angelo, TX	01/21/99	Oilfield Services.
35,585	Inland Resources (Wkrs)	Denver, CO	01/20/99	Crude Oil.
35,586	Buckeye, Inc. (Wkrs)	Midland, TX	01/18/99	Oil Drilling Fluids.
35,587	Hopewell Sewing (UNITE)	Brodnax, VA	01/18/99	Girl's Dresses.
35,588	Quebecor Printing (GCIU)	Glen Burnie, MD	01/19/99	Printed Advertisements.
35,589	Lumex Manufacturing (Co.)	Johnstown, NY	01/25/99	Pressure Relief Systems.
35,590	Petco Petroleum Corp. (Wkrs)	St. Elmo, IL	01/18/99	Crude Oil.
35,591	Crown Cork and Seal (Wkrs)	Omaha, NE	01/21/99	Can Ends.

[FR Doc. 99–5184 Filed 3–2–99; 8:45 am]

BILLING CODE 4510–30–M

DEPARTMENT OF LABOR

Employment and Training Administration

[TA–W–35,534]

Gesco International, San Antonio, Texas; Notice of Termination of Investigation

Pursuant to Section 221 of the Trade Act of 1974, an investigation was initiated on January 25, 1999 in response to a worker petition which was filed on behalf of workers at Gesco International, San Antonio, Texas.

The petitioner has requested that the petition be withdrawn. Consequently, further investigation in this case would serve no purpose; and the investigation has been terminated.

Signed at Washington, D.C. this 10th day of February 1999.

Grant D. Beale,

Acting Director, Office of Trade Adjustment Assistance.

[FR Doc. 99–5181 Filed 3–2–99; 8:45 am]

BILLING CODE 4510–30–M

DEPARTMENT OF LABOR

Employment and Training Administration

[TA–W–35,608]

Herald Handbag Manufacturing Co., New York, New York; Notice of Termination of Investigation

Pursuant to Section 221 of the Trade Act of 1974, an investigation was initiated on February 8, 1999, in response to a worker petition which was filed on behalf of workers at Herald Handbag Manufacturing Co., New York, New York.

All workers of the subject firm are included in a petition investigation in process for TA–W–35,212. Consequently, further investigation in this case would serve no purpose, and the investigation has been terminated.

Signed at Washington, DC this 16th day of February 1999.

Grant D. Beale;

Acting Director, Office of Trade Adjustment Assistance.

[FR Doc. 99–5188 Filed 3–2–99; 8:45 am]

BILLING CODE 4510–30–M

DEPARTMENT OF LABOR

Employment and Training Administration

[TA–W–35,238]

Houston Atlas, Incorporated, Kingwood, Texas; Notice of Termination of Investigation

Pursuant to Section 250 of the Trade Act of 1974, an investigation was

initiated on November 30, 1998, in response to a petition filed on the same date on behalf of workers at Houston Atlas, Incorporated, Kingwood, Texas.

The petitioner has requested that the petition be withdrawn. Consequently, further investigation in this case would serve no purpose, and the investigation has been terminated.

Signed in Washington, D.C. this 19th day of February 1999.

Grant D. Beale,

Acting Director, Office of Trade Adjustment Assistance.

[FR Doc. 99–5186 Filed 3–2–99; 8:45 am]

BILLING CODE 4510–30–M

DEPARTMENT OF LABOR

Employment and Training Administration

[TA–W–35,565]

Knoedler Manufacturers, Incorporated, Battle Creek, Michigan; Notice of Termination of Investigation

Pursuant to Section 221 of the Trade Act of 1974, an investigation was initiated on February 1, 1999 in response to a worker petition which was filed on behalf of workers and former workers at Knoedler Manufacturers, Incorporated, located in Battle Creek, Michigan (TA–W–35,565).

The Department of Labor has determined that the petition is invalid. Under the Trade Act of 1974, a petition may be filed by a group of three or more workers in a firm, by a company official, or by their union or other duly authorized representative. Consequently, further investigation in this matter would serve no purpose, and the investigation has been terminated.

Signed at Washington, D.C. this 9th day of February 1999.

Grant D. Beale,

Acting Director, Office of Trade Adjustment Assistance.

[FR Doc. 99–5183 Filed 3–2–99; 8:45 am]

BILLING CODE 4510–30–M

DEPARTMENT OF LABOR

Employment and Training Administration

[TA–W–35,500]

Milton Bradley Wood Products, Fairfax, Vermont; Notice of Termination of Investigation

Pursuant to Section 221 of the Trade Act of 1974, an investigation was initiated on January 19, 1999, in response to a petition filed on the same date on behalf of workers at Milton Bradley Wood Products, Fairfax, Vermont. The workers were engaged in the production of wooden game pieces and the plant closed in December, 1998, ending all employment at that time.

The certification applicable to the petitioning workers at Milton Bradley Wood Products, Fairfax, Vermont was issued on March 11, 1997, and is currently in effect (TA–W–33,194H). That certification covers the petitioning group in its entirety. Consequently, further investigation in this case would serve no purpose, and the investigation has been terminated.

Signed in Washington, DC this 10th day of February 1999.

Grant D. Beale,

Acting Director, Office of Trade Adjustment Assistance.

[FR Doc. 99–5187 Filed 3–2–99; 8:45 am]

BILLING CODE 4510–30–M

DEPARTMENT OF LABOR

Employment and Training Administration

Investigations Regarding Certifications of Eligibility to Apply for Worker Adjustment Assistance

Petitions have been filed with the Secretary of Labor under Section 221 (a) of the Trade Act of 1974 (''the Act'' and are identified in the Appendix to this notice. Upon receipt of these petitions, the Acting Director of the Office of Trade Adjustment Assistance, Employment and Training Administration, has instituted investigations pursuant to Section 221 (a) of the Act.

The purpose of each of the investigations is to determine whether the workers are eligible to apply for adjustment assistance under Title II, Chapter 2, of the Act. The investigations will further relate, as appropriate, to the determination of the date on which total or partial separations began or threatened to begin and the subdivision of the firm involved.

The petitioners or any other persons showing a substantial interest in the subject matter of the investigations may request a public hearing, provided such request is filed in writing with the Acting Director, office of Trade Adjustment Assistance, at the address shown below, not later than March 15, 1999.

Interested persons are invited to submit written comments regarding the subject matter of the investigations to the Acting Director, Office of Trade Adjustment Assistance, at the address shown below, not later than March 15, 1999.

The petitions filed in this case are available for inspection at the Office of the Aging Director, Office of Trade Adjustment Assistance, Employment and Training Administration, U.S. Department of Labor, 200 Constitution Avenue, N.W., Washington, D.C. 20210.

Signed at Washington, D.C. this 8th day of February, 1999.

Grant D. Beale,

Acting Director, Office of Trade Adjustment Assistance.

APPENDIX

[Petitions Instituted on 02/08/1999]

TA–W	Subject firm (petitioners)	Location	Date of petition	Product(s)
35,592	North American Refract. (USWA)	Womelsdorf, PA	01/26/1999	Refractory Products
35,593	Rival Co. (The) (Comp)	Fayetteville, NC	01/18/1999	Residential Air Cleaners.
35,594	Intertek Testing Services (Wrks)	Pasadena, TX	01/28/1999	Inspect Goods at Point of Shipment.
35,595	Oxford of Vidalia (Comp)	Vidalia, GA	01/15/1999	Men's Dress Shirts.
35,596	Bill Kaiser Co. (Comp)	Kansas City, MO	01/22/1999	Industrial Sewing Machines.
35,597	Three Star Drilling (Wrks)	Sumner, IL	01/19/1999	Crude Oil.
35,598	NANA Management Services (Comp)	Anchorage, AK	01/22/1999	Food, Housekeeping & Security Services.
35,599	Perfection Pad (UNITE)	Buffalo, NY	01/07/1999	Shoulder Pads for Clothing.
35,600	Exolon-ESK Co. (Comp)	Tonawanda, NY	12/28/1998	Abrasives.
35,601	Quality Chemicals Ind. (Wrks)	Tyrone, PA	01/26/1999	Chemical Intermediates—Agricultural.

APPENDIX—Continued

[Petitions Instituted on 02/08/1999]

TA–W	Subject firm (petitioners)	Location	Date of petition	Product(s)
35,602	Becton Dickinson (Comp)	Hancock, NY	01/25/1999	Medical Devices.
35,603	Midwestern Mud Service (Comp)	Wichita Falls, TX	01/25/1999	Retail Sales of Oilfield Drilling Fluids.
35,604	Universal Stainless (USWA)	Titusville, PA	01/18/1999	Melting, Annealing Steel Ingots.
35,605	Ball Foster (GMP)	Millville, NJ	01/27/1999	Glass Containers.
35,606	P and M Cedar Products (UBC)	Redding, CA	01/20/1999	Sawmill.
35,607	Mackintosh of New England (Comp)	New Bedfort, MA	12/18/1998	Ladies' Wool Jackets and Coats.
35,608	Harold Handbag Mfg (Wrks)	New York, NY	01/08/1999	Handbags.
35,609	Advanced Energy Ind. (Comp)	Ft. Collins, CO	01/12/1999	Power Supplies.
35,610	Ralston Prunia (Wrks)	Olmsted, IL	01/20/1999	Clay Products.
35,611	Story and Clark (Wrks)	Seneca, PA	01/21/1999	Pianos & Components.
35,612	Salant Corp, Obion-Denton (Comp)	Union City, TN	01/25/1999	Children's Sleepwear.
35,613	Conoco, Inc. (Comp)	Houston, TX	01/21/1999	Oil and Gas.
35,614	Jasper Textiles, Inc. (Comp)	Jacksonville, NC	01/20/1999	Knit Shirts.
35,615	Shape—Global Div. (Wrks)	Sanford, ME	01/28/1999	Audio and Video Cassettes.
35,616	Erie Forge and Steel, Inc. (Wrks)	Erie, PA	01/25/1999	Ship Shafts.
35,617	Longview Fiber (WCIW)	Leavenworth, WA	01/27/1999	Softwood Lumber.
35,618	Kinzua Resources/Frontiar (Wrks)	Heppner, OR	01/28/1999	Lumber.
35,619	Coastal Management Corp. (Wrks)	Bryan, TX	01/27/1999	Oilfield Services.
35,620	Cascade Steel Rooling (USWA)	McMinnville, OR	01/26/1999	Rolled Steel Re-Bar, Merchant Bar.
35,621	Tyler Ten Quality (Wrks)	Jacksonville, TX	01/25/1999	Ladies'Jackets.
35,622	Apparel Group (The) (UNITE)	Louisville, KY	01/26/1999	Men's Shirts.
35,623	Leasehold Management Corp. (Wrks)	Oklahoma City, OK	01/24/1999	Oil.
35,624	Bar-Sew, Inc. (Wrks)	Lehighton, PA	01/29/1999	Ladies' Blouses.
35,625	Independent Products USA (Comp)	Champlain, NY	01/15/1999	Natural Sausage Casings.
35,626	Valve Sales Co., Inc. (Comp)	Houston, TX	01/08/1999	Sell Valves and Actuators.
35,627	Titan Tire Corp. (USWA)	Des Moines, IA	02/01/1999	Rubber Tires.
35,628	Western Gas Resources (Comp)	Ringwood, OK	01/27/1999	Natural Gas and Natural Gas Liquids.
35,629	Gnnetcom, Inc. (Wrks)	Scotts Valley, CA	01/26/1999	Wireless Headsets.
35,630	Semiconductor Components (Comp)	Phoenix, AZ	01/27/1999	Semiconductors.
35,631	Burlington Industries (Wrks)	Statesville, NC	01/29/1999	Knitted Fabrics and Garments.

[FR Doc. 99–5185 Filed 3–2–99; 8:45 am]

BILLING CODE 4510–30–M

DEPARTMENT OF LABOR

Employment and Training Administration

[TA–W–35,126]

Parsons Pine Products, Ashland, Oregon; Notice of Termination of Investigation

Pursuant to Section 221 of the Trade Act of 1974, an investigation was initiated on October 26, 1998 in response to a worker petition which was filed on behalf of workers at Parsons Pine Products, Ashland, Oregon.

The petitioner has requested that the petition be withdrawn. Consequently, further investigation in this case would serve no purpose, and the investigation has been terminated.

Signed at Washington, D.C. this 11th day of February 1999.

Grant D. Beale,

Acting Director, Office of Trade Adjustment Assistance.

[FR Doc. 99–5182 Filed 3–2–99; 8:45 am]

BILLING CODE 4510–30–M

DEPARTMENT OF LABOR

Mine Safety and Health Administration

Proposed Information Collection Request Submitted for Public Comment and Recommendations: Preparation and Maintenance of Accurate and Up-to-date Certified Mine Maps for Surface and Underground Coal Mines, Submittal of Underground Mine Closure Maps, and Notification of MSHA Prior to Opening New Mines or the Reopening of Inactive or Abandoned Mines

ACTION: Notice.

SUMMARY: The Department of Labor, as part of its continuing effort to reduce paperwork and respondent burden conducts a preclearance consultation program to provide the general public and Federal agencies with an opportunity to comment on proposed and/or continuing collections of information in accordance with the Paperwork Reduction Act of 1995 (PRA95) (44 U.S.C. 3506(c)(2)(A)]. This program helps to ensure that requested data can be provided in the desired format, reporting burden (time and financial resources) is minimized, collection instruments are clearly understood, and the impact of collection requirements on respondents can be properly assessed.

Currently, the Mine Safety and Health Administration (MSHA) is soliciting comments concerning the proposed extension of the information collection related to the Record of Mine Closeure addressed in 30 CFR 75.1204; the inclusion of standards requiring MSHA notification and inspection prior to mining when opening a new mine or reopening an inactive or abandoned mine addressed in 30 CFR 75.373 and 75.1721; and, the inclusion of standards requiring underground and surface mine operators to prepare and maintain accurate and up-to-date mine maps addressed in 30 CFR 75.1200, 75.1200–1, 75.1201, 75.1202, 75.1202–1, 75.1203, 77.1201 and 77.1202. MSHA is particularly interested in comments which:

- Evaluate whether the proposed collection of information is necessary for the proper performance of the functions of the agency, including whether the information will have practical utility;
- Evaluate the accuracy of the agency's estimate of the burden of the proposed collection of information,

including the validity of the methodology and assumptions used;

- Enhance the quality, utility, and clarity of the information to be collected; and
- Minimize the burden of the collection of information on those who are to respond, including through the use of appropriate automated, electronic, mechanical, or other technological collection techniques or the forms of information technology, e.g., permitting electronic submissions of responses.

A copy of the proposed information collection request can be obtained by contacting the employee listed below in the For Further Information Contact section of this notice

DATES: Submit comments on or before May 8, 1999.

ADDRESSES: Send comments to Theresa M. O'Malley, Chief, Records Management Branch, Office of Program Evaluation and Information Resources, 4015 Wilson Boulevard, Room 715, Arlington, VA 22203–1984. Commenters are encouraged to send their comments on a computer disk, or via E-mail to tomalley@msha.gov, along with an original printed copy. Mrs. O'Malley can be reached at (703) 235–1470 (voice) or (703) 235–1563 (facsimile).

FOR FURTHER INFORMATION CONTACT: Theresa M. O'Malley, Chief, Records Management Branch, Office of Program Evaluation and Information Resources, U.S. Department of Labor, Mine Safety and Health Administration, Room 715, 4015 Wilson Boulevard, Arlington, VA 22203–1984. Mrs. O'Malley can be reached at tomalley@msha.gov (Internet E-mail), (703) 235–1470 (voice), or (703) 235–1563 (facsimile).

SUPPLEMENTARY INFORMATION:

I. Background

Title 30 CFR 75.1200, 75.1200–1, 75.1201, 75.1202, 75.1202–1, and 75.1203 require underground coal mine operators to have in a fireproof repository in an area on the surface of the mine chosen by the mine operator to minimize the danger of destruction by fire or other hazards, an accurate and up-to-date map of such mine drawn on scale. These standards specify the information which must be shown, the range of acceptable scale, the surveying technique or equivalent accuracy required of the surveying which must be used to prepare the map, that the maps must be certified as accurate by a registered engineer or surveyor, that the maps must be kept continuously up-to-date by temporary notations and must be revised and supplemented to include the temporary notations at intervals not more than 6 months. In addition, the mine operator must provide the MSHA District Manager a copy of the certified mine map annually during the operating life of the mine. These maps are essential to the planning and safe operation of the mine. In addition, these maps provide a graphic presentation of the locations of working sections and the locations of fixed surface and underground mine facilities and equipment, escapeway routes, coal haulage and man and materials haulage entries and other information essential to mine rescue or mine fire fighting activities in the event of mine fire, explosion or inundations of gas or water. The information is essential to the safe operation of adjacent mines and mines approaching the worked out areas of active or abandoned mines.

Title 30 CFR 75.1204 and 75.1204–1 require that whenever an underground coal mine operator permanently closes or abandons a coal mine, or temporarily closes a coal mine for a period of 90 days, the operator shall file with MSHA a copy of the mine map revised and supplemented to the date of closure. Maps are retained in a repository and are made available to mine operators of adjacent properties. The maps are necessary to provide an accurate record of underground areas that have been mined to help prevent active mine operators from mining into abandoned areas that may contain water or harmful gases.

Title 30 CFR 77.1200, 77.1201 and 77.1202 require surface coal mine operators to maintain an accurate and up-to-date map of the mine and specifies the information to be shown on the map, the acceptable range of map scales, that the map be certified by a registered engineer or surveyor, that they be available for inspection by the Secretary or his authorized representative. These maps are essential for the safe operation of the mine and provide essential information to operators of adjacent surface and underground mine operations. Properly prepared effectively utilized surface mine maps can prevent outbursts of water impounded in underground mine workings and/or inundations of underground mines by surface impounded water or water and/or gases impounded in surface auger mining worked out areas.

Title 30 75.373 and 75.1721 require that after a mine is abandoned or declared inactive and before it is reopened, mine operations shall not begin until MSHA has been notified and has completed an inspection. Standard 75.1721 specifies that the notification be in writing and lists specific information, preliminary arrangements and mine plans which must be submitted to the MSHA District Manager.

II. Current Actions

Mine operators are required to conduct surveying such that mine maps are maintained accurate and up-to-date, the maps must be revised every 6 months and certified accurate by a registered engineer or surveyor and to submit copies of the certified underground maps to MSHA annually and an up-to-date and revised mine closure map whenever an operator permanently closes or abandons a coal mine, or temporarily closes a coal mine for a period of more than 90 days, he or she shall promptly notify the Secretary of such closure.

In addition, mine operators must notify MSHA so that an inspection can be conducted when ever a new mine is opened or a previously abandoned or inactive mine is reopened. The information required to be gathered and recorded on mine maps is essential to the safe operation of the mine and essential to the effectiveness of mandatory inspections and mandated mine plan approval by MSHA. Such information cannot be replaced by any other source and anything less than continuously updated and accurate information would place miner's safety at risk.

The information collected through the submittal of mine closure maps is used by operators of adjacent coal mines when approaching abandoned underground mines. The abandoned mine could be flooded with water or contain explosive amounts of methane or harmful gases. If the operator were to mine into such an area, unaware of the hazards, miners could be killed or seriously injured. In addition, it is in the public interest to maintain permanent records of the locations, extent of workings and potential hazards associated with abandoned mines. The public safety can be adversely affected by future land usage where such hazards are not known or inaccurately assessed. MSHA collects the closure maps and provides those documents to the Office of Surface Mine Reclamation for inclusion in a repository of abandoned mine maps. Therefore, MSHA is continuing the certification and application of 30 CFR 75.1204 to assure the required information remains available for the protection of miner's and public safety. In addition, MSHA has added the burden hours and cost estimates for standards which address the preparation and maintenance of certified mine maps for surface and underground coal mines and the

notification of MSHA prior to the opening on new coal mines or the reopening of inactive or abandoned mines.

Type of Review: Reinstatement and Existing collection in use without an OMB control number.

Agency: Mine Safety and Health Administration.

Title: Preparation and Maintenance of Accurate and Up-to-date Certified Mine maps for Surface and Underground Coal Mines; Submittal of Underground Mine Closure Maps; and, Notification of MSHA Prior to Opening New Mines or the Reopening of Inactive or Abandoned Mines.

OMB Number: 1219–0073.

Agency Number: MSHA 205.

Recordkeeping: Mine operators are required conduct surveying such that mine maps are maintained accurate and up-to-date, the maps must be revised every 6 months and certified accurate by a registered engineer or surveyor and to submit copies of the certified underground maps to MSHA annually and an up-to-date and revised mine closure map whenever an operator permanently closes or abandons a coal mine, or temporarily closes a coal mine for a period of more than 90 days, he or she shall promptly notify the Secretary of such closure.

In addition, mine operators must notify MSHA so that an inspection can be conducted when ever a new mine is opened or a previously abandoned or inactive mine is reopened. The information required to be gathered and recorded on mine maps is essential to the safe operation of the mine and essential to the effectiveness of mandatory inspections and mandated mine plan approval by MSHA. Such information cannot be replaced by any other source and anything less than continuously updated and accurate information would place miner's safety at risk.

Affected Public: Business or other for-profit.

Cite/reference	Total respondents	Frequency	Total responses	Average time per response (hours)	Burden hours
75.1200, 75.1200–1, 75.1201, 75.1202, 75.1202–1, 75.1203, 75.1204, & 75.1204–1.	1,064	Biannual	750	11.28	17,024
75.1204 & 75.1204–1	1,500	On occasion	724	2	1,448
75.373 & 75.1721	1,500	On occasion	210	6	1,260
77.1200, 77.1201 & 77.1202	1,699	Quarterly	424	5	8,480
Totals	[1] 3,154		2,108		28,212

[1] The total respondents is 1,064; however, 25% of the mine operators perform these tasks utilizing mine-staff, the remaining 75% utilize contracting services. The contracting services are included as an Operating and Maintenance cost (shown below).

Total Burden Cost (capital/startup): None.

Total Burden Cost (operating/maintaining): Contract Surveying and Map preparation $24,006,575.

Comments submitted in response to this notice will be summarized and/or included in the request for Office of Management and Budget approval of the information collection request; they will also become a matter of public record.

Dated: February 25, 1999.

Theresa M. O'Malley,

Chief, Records Management Branch.

[FR Doc. 99–5191 Filed 3–2–99; 8:45 am]

BILLING CODE 4510–43–M

LEGAL SERVICES CORPORATION

Availability of Funds and Requests for Grant Proposals

AGENCY: Legal Services Corporation.

ACTION: Announcement of funding and technical assistance grants.

SUMMARY: The Legal Services Corporation has set aside $75,000 for technical assistance grants to advance the development of comprehensive, integrated statewide delivery systems. The Corporation solicits proposals from existing grantees, non-profit organizations, bar associations, and other interested parties. Grant funds are to be used to facilitate planning for and/or implementation of plans to improve and expand client services through comprehensive, integrated statewide delivery systems.

SUPPLEMENTARY INFORMATION: The Legal Services Corporation has set aside $75,000 for technical assistance grants to advance the development of comprehensive, integrated statewide delivery systems. The Corporation solicits proposals from existing grantees, non-profit organizations, bar associations, and other interested parties. Grant funds are to be used to facilitate planning for and/or implementation of plans to improve and expand client services through comprehensive, integrated statewide delivery systems.

All grants will be awarded pursuant to the authority conferred by Section 1006(a)(3), 42 U.S.C. 2996e(a)(3), *et seq.*, of the Legal Services Act of 1974, as amended.

Each grant will be made on a one-time non-recurring basis. The award amount will be no less than $5,000 and no greater than $15,000 per grant, with preference given to matching grants. Grants exceeding $10,000 will be made only where there is a match of each dollar over $10,000.

Proposals should promote activities designed to improve applicant(s)' statewide civil delivery system, making it more responsive to eligible clients and encouraging the strategic use of resources. LSC will fund proposals that exhibit support from a broad range of state planning stakeholders and contain the most promise for success, given the resources involved.

Proposed activities may include but are not limited to those that: (1) address barriers to integrated delivery systems identified through applicant's state planning process; or (2) develop specific projects such as statewide technology planning efforts, statewide or regional advice, intake and referral systems, or statewide resource development strategies.

LSC will give preference to proposals that include matching dollars for all or some portion of the amount requested from the Corporation. The non-LSC share, which must be a cash contribution, may come from a private or public source, including an IOLTA program, private foundation, law firm or applicant(s)' program(s).

APPLICATIONS: Proposals are due on April 1, 1999. Instructions on applying may be downloaded from the Corporations's Website, www.lsc.gov. They are available, by e-mail or fax, through Ms. Lou Castro, castrol@smtp.lsc.gov; 202–336–8932.

DATES: Proposals will be reviewed during the first two weeks of April 1999,

and must be received by the Corporation by April 1, 1999.

ADDRESSES: Technical Assistance Grants, Legal Services Corporation, 750 First St., NE, 10th Fl., Washington, DC 20002–4250. Applications may be e-mailed to competition@smtp.lsc.gov.

FOR FURTHER INFORMATION CONTACT: Pat Hanrahan, Program Counsel, Legal Services Corporation, 202/336–8848; hanrahap@smtp.lsc.gov.

Karen J. Sarjeant,

Vice-President for Programs.

[FR Doc. 99–5126 Filed 3–2–99; 8:45 am]

BILLING CODE 7050–01–P

NATIONAL AERONAUTICS AND SPACE ADMINISTRATION

[Notice 99–039]

Notice of Prospective Patent License

AGENCY: National Aeronautics and Space Administration.

ACTION: Notice of Prospective Patent License.

SUMMARY: NASA hereby gives notice that Thermosurgery Technologies, Inc., of Phoenix, AZ, has applied for an exclusive license to practice the inventions described in: NASA Case No. 22483–1, ''Microwave Treatment System for Cardiac Arrhythmias;'' NASA Case No. 22483–2, ''In Vivo Simulator for Microwave Treatment;'' NASA Case No. 22483–3, ''Transcather Antenna For Microwave Treatment;'' and NASA Case No. 22483–4, ''Computer Simulation of Microwave Treatment;'' which are assigned to the United States of America as represented by the Administrator of the National Aeronautics and Space Administration. Written objections to the prospective grant of a license should be sent to the Lyndon B. Johnson Space Center, 2101 NASA Road 1, Houston, Texas, 77058–3696.

DATES: Responses to this notice must be received by May 3, 1999.

FOR FURTHER INFORMATION CONTACT: Mr. Hardie Barr, Lyndon B. Johnson Space Center, 2101 NASA Road 1, Houston, Texas, 77058–3696; telephone (281) 483–1003.

Dated: February 23, 1999.

Edward A. Frankle,

General Counsel.

[FR Doc. 99–5140 Filed 3–2–99; 8:45 am]

BILLING CODE 7510–01–P

NATIONAL SCIENCE FOUNDATION

Notice of Intent to Seek Approval to Extend and Revise a Current Information Collection

AGENCY: National Science Foundation.

ACTION: Submission for OMB Review; Comment Request.

SUMMARY: The National Science Foundation (NSF) has submitted the following information collection requirement to OMB for review and clearance under the Paperwork Reduction Act of 1995, Pub. L. 104–13. This is the *second notice* for public comment; the first was published in the **Federal Register** at 63 FR 71960, *and no comments were received.* NSF is forwarding the proposed renewal submission to the Office of Management and Budget (OMB) for clearance simultaneously with the publication of this second notice. Comments regarding (a) whether the collection of information is necessary for the proper performance of the functions of the agency, including whether the information will have practical utility; (b) the accuracy of the agency's estimate of burden including the validity of the methodology and assumptions used; (c) ways to enhance the quality, utility and clarity of the information to be collected; and (d) ways to minimize the burden of the collection of information on those who are to respond, including through the use of appropriate automated, electronic, mechanical, or other technological collection techniques or other forms of information technology should be addressed to: Office of Information and Regulatory Affairs of OMB, Attention: Desk Officer for National Science Foundation, 725—17th Street, NW, Room 10235, Washington, DC 20503, and to Suzanne H. Pilmpton, Reports Clearance Officer, National Science Foundation, 4201 Wilson Boulevard, Suite 295, Arlington, Virginia 22230 or send email to splimpto@nsf.gov. Comments regarding these information collections are best assured of having their full effect if received within 30 days of this notification. Copies of the submission(s) may be obtained by calling 703–306–1125 X 2017.

NSF may not conduct or sponsor a collection of information unless the collection of information displays a currently valid OMB control number and the agency informs potential persons who are to respond to the collection of information that such persons are not required to respond to the collection of information unless it displays a currently valid OMB control number.

Title of Collection: Survey of Research and Development Expenditures at Universities and Colleges, FY 1999 through FY 2001; OMB Control Number 3145–0100.

OMB Control Number: 3145–0100.

Summary of Collection: Separately budgeted current fund expenditures on research and development in the sciences and engineering performed by universities and colleges and their affiliated federally funded research and development centers—A mail/electronic survey, the Survey of Scientific and Engineering Expenditures at Universities and Colleges, originated in fiscal year (FY) 1954 and has been conducted annually since FY 1972. The survey is the academic expenditure component of the NSF statistical program that seeks to provide a ''central clearinghouse for the collection, interpretation, and analysis of data on the availability of, and the current and projected need for, scientific and technical resources in the United States, and to provide a source of information for policy formulation by other agencies of the Federal government,'' as mandated in the National Science Foundation Act of 1950.

Use of the Information: The proposed project will return to and maintain a full survey cycle population of about 700 institutions.

The survey which was conducted as a full survey population only every 5 years and as a statistical sample in each of the 4 intervening years was based primarily on reducing respondent burden. Consistency of records of the non-sampled institutions and frequent personnel changes, added to their burden. With the onset of Web-based data collection and a change for a minimum requirement of $150K in expenditures for any master's or bachelor's degree-granting institution, the respondent burden and timelines is expected to decrease. These institutions account for over 98 percent of the Nation's academic R&D funds. The survey has provided continuity of statistics on R&D expenditures by source of funds and passed through dollars; by science & engineering (S&E) field, and separate data requested on current fund expenditures for research equipment by S&E field, and selected non-science and engineering fields. In addition, statistics from the survey are published in NSF's annual publication series Academic Science and Engineering R&D Expenditures and are available electronically on the World Wide Web.

The survey will be mailed primarily to the administrators at the Institutional Research Offices. To minimize burden, institutions are provided with (in addition to paper copy) file specifications needed to upload data from the web data collection system (http://www.qrc.com/exp).

Description of Respondents: Not-for-profit institutions.

Number of Respondents: 698 (average).

Frequency of Responses: Reporting annually.

Total Burden Hours: 9,014.

Approximately 65% responded electronically using the previous Automatic Survey Questionnaire on diskette to this voluntary survey in FY 1997 and a total response rate of 98.0% was obtained. Burden estimates are as follows:

	Total number of institutions	Burden Hours		
		Doctorate-granting	Masters-granting	Bachelors or below
FY 1997	692	19.0	7.0	7.0
FY 1996	692	21.5	7.1	6.2

Dated: February 26, 1999.

Suzanne H. Plimpton,

Reports Clearance Officer.

[FR Doc. 99–5231 Filed 3–2–99; 8:45 am]

BILLING CODE 7555–01–M

NATIONAL WOMEN'S BUSINESS COUNCIL

Sunshine Act Meeting

AGENCY: National Women's Business Council.

ACTION: Notice of Meeting.

SUMMARY: In accordance with the Women's Business Ownership Act, Public law 105–135 as amended, the National Women's Business Council (NWBC) announces a forthcoming Council meeting and joint meeting of the NWBC and Interagency Committee on Women's Business Enterprise. The meetings will cover action items worked on by the National Women's Business Council and the Interagency Committee on Women's Business Enterprise included by not limited to procurement, access to capital and training.

DATES: March 19, 1999.

ADDRESSES: *Council Meeting & Joint Meeting,* The White House/Old Executive Office Building, Indian Treaty Room, Washington, DC 20502.

10:00 am–11:00 am/Council Meeting
11:00 am–12:00 pm/Joint Meeting.

STATUS: Open to the public—limited space available.

CONTACT: National Women's Business Council, 409 Third Street, S.W., 5th Floor, Washington, DC 20024, (202) 205–3850.

NOTE: Please call by March 10, 1999. Attendance/Clearance by RSVP only.

Gilda Presley,

Administrative Officer, National Women's Business Council.

[FR Doc. 99–5400 Filed 3–1–99; 3:02 pm]

BILLING CODE 6820–AB–M

NUCLEAR REGULATORY COMMISSION

[Docket 72–9]

Department of Energy Issuance of Environmental Assessment and Finding of No Significant Impact Regarding the Proposed Exemption From Requirements of 10 CFR Part 20

By letter dated December 10, 1997, as supplemented by letter dated December 9, 1998, the Department of Energy (DOE or applicant) requested an exemption from the requirements of 10 CFR 20.1501(c) related to DOE's proposed operation of the Fort St. Vrain (FSV) Independent Spent Fuel Storage Installation (ISFSI). The facility is located in Weld County, Colorado.

Environmental Assessment (EA)

Identification of Proposed Action

The applicant is seeking Nuclear Regulatory Commission (NRC or Commission) approval to take possession of NRC Materials License SNM–2504 to operate the FSV ISFSI. The FSV ISFSI is an existing facility constructed and licensed to store spent nuclear fuel from the formerly licensed Fort St. Vrain High Temperature Gas Reactor. By letter dated December 17, 1996, DOE submitted an application to transfer SNM–2504 from Public Service Company of Colorado (the current license holder) to DOE. The NRC staff is currently performing a review of that application. In a December 10, 1997, supplement to the application, DOE requested an exemption from the requirements of 10 CFR 20.1501(c). Section 20.1501(c) states, in part, that ''All personnel dosimeters * * * that require processing * * * must be processed and evaluated by a dosimetry processor * * * (1) Holding current personnel dosimetry accreditation from the National Voluntary Laboratory Accreditation Program (NVLAP) of the National Institute of Standards and Technology. * * *'' Specifically, the applicant has requested authorization to use the Department of Energy Laboratory Accreditation Program (DOELAP) as an alternative dosimetry processing accreditation standard.

Need for the Proposed Action

The applicant is preparing to operate the FSV ISFSI as described in its application and accompanying safety analysis report (SAR), subject to transference of the existing NRC License SNM–2504 to DOE. The applicant is implementing programs and procedures necessary to operate the ISFSI and seeks to have those programs make efficient use of resources. One of the programs developed by DOE is the capability to monitor personnel occupational radioactive dose for routine and non-routine activities at the FSV ISFSI. Personnel dosimetry requires processing by a qualified processing facility. DOE prefers to use a processing organization that currently processes dosimetry for its Idaho National Engineering and Environmental Laboratory (INEEL). That processor is accredited under the DOE Laboratory Accreditation Program, rather than under the NVLAP program. To support the efficient use of resources, DOE has requested to use a DOELAP accreditation process for processing personnel dosimetry associated with FSV.

Environmental Impacts of the Proposed Action

The Nuclear Regulatory Commission staff has examined both the NVLAP and DOELAP accreditation processes and standards. Both the NVLAP and DOELAP programs have similar requirements in that they incorporate similar test categories (type of radiation and energy levels), tolerance levels, bias, and performance criteria. The staff concluded that the DOELAP process is

at least as stringent as the NVLAP process and further concludes that, for the FSV ISFSI, the DOELAP process is an acceptable alternative to the NVLAP process required by 10 CFR 20.1501(c).

The Environmental Assessment (EA) for the proposed transfer of SNM–2504 (62 FR 15737, April 2, 1997) considered the potential environmental impacts of transfer of the FSV ISFSI license from the existing licensee, Public Service Company of Colorado, to DOE. The proposed actions now under consideration would not change the potential environmental effects assessed in the April 2, 1997, EA. Specifically, there are no environmental impacts associated with the accreditation program for personnel dosimetry processing, which is purely an administrative function.

Alternatives to the Proposed Action

Since there are no significant environmental impacts associated with the proposed action, any alternatives with equal or greater environmental impact are not evaluated. The alternative to the proposed action would be to deny approval of the exemption and, therefore, not allow use of the DOELAP accreditation program by DOE. These alternatives would have no significant environmental impacts as well.

Agencies and Persons Consulted

Officials from the State of Colorado were contacted about the EA for the proposed action and had no concerns.

Finding of No Significant Impact

The environmental impacts of the proposed action have been reviewed in accordance with the requirements set forth in 10 CFR part 51. Based upon the foregoing EA, the Commission finds that the proposed action of granting an exemption from 10 CFR 20.1501(c) so that DOE may use a DOELAP accreditation program, rather than an NVLAP program as required by existing regulations, will not significantly impact the quality of the human environment. Accordingly, the Commission has determined not to prepare an environmental impact statement for the proposed exemption.

This application was docketed under 10 CFR Part 72, Docket 72–9. For further details with respect to this action, see the application for an ISFSI license dated December 17, 1996, the request for exemption dated December 10, 1997, and supplement dated December 9, 1998, which are available for public inspection at the Commission's Public Document Room, 2120 L Street, NW, Washington, DC 20555.

Dated at Rockville, Maryland, this 19th day of February, 1999.

For the Nuclear Regulatory Commission.

E. William Brach,

Director, Spent Fuel Project Office, Office of Nuclear Material Safety and Safeguards.

[FR Doc. 99–5200 Filed 3–2–99; 8:45 am]

BILLING CODE 7590–01–P

NUCLEAR REGULATORY COMMISSION

[Docket Number 40–8904]

Sohio Western Mining Company's L-Bar Site

AGENCY: U.S. Nuclear Regulatory Commission.

ACTION: Final finding of no significant impact.

SUMMARY: Notice is hereby given that the U.S. Nuclear Regulatory Commission (NRC) proposes to amend Sohio Western Mining Company's (Sohio's) Source Material License SUA–1472, to allow alternate concentration limits (ACLs) for ground water hazardous constituents at the L-Bar uranium mill site in Cibola County, New Mexico. An Environmental Assessment (EA) was performed by the NRC staff in accordance with the requirements of 10 CFR Part 51. The conclusion of the EA was a Finding of No Significant Impact (FONSI) for this licensing action.

FOR FURTHER INFORMATION CONTACT: Kenneth R. Hooks, Uranium Recovery Branch, Division of Waste Management, U.S. Nuclear Regulatory Commission, Washington, DC 20555. Telephone (301) 415–7777.

SUPPLEMENTARY INFORMATION:

Background

By letter of September 24, 1998, Sohio requested that Source Material License SUA–1472 be amended to allow ACLs for ground water constituents selenium and uranium at the L-Bar site. On October 26 and November 25, 1998, Sohio provided additional information that was requested by NRC staff. Based on its evaluations of the information provided, NRC staff has concluded that the ACLs proposed by Sohio are acceptable. In order to terminate the existing ground water corrective action program (CAP), the licensee must meet 10 CFR Part 40, Appendix A, Criterion 5B(5), which requires that, at the point of compliance (POC), the concentration of a hazardous constituent must not exceed the established background concentration of that constituent, the maximum concentration limits (MCLs) given in Table 5C of Appendix A, or an alternate concentration limit established by NRC.

Summary of the Environmental Assessment

Identification of the Proposed Action

The proposed action is an amendment to SUA–1472 to allow the application of ACLs for ground water hazardous constituents selenium and uranium, at the Sohio Western Mining Company's L-Bar uranium mill tailings site, as provided in 10 CFR Part 40, Appendix A, Criterion 5B(5). NRC staff's review was conducted in accordance with the ''Staff Technical Position, Alternate Concentration Limits for Title II Uranium Mills,'' dated January 1996.

Based on its evaluation of Sohio's amendment request, NRC staff has concluded that granting Sohio the request for ACLs will not result in significant impacts. The staff decision was based on information provided by Sohio, demonstrating that its proposed ACLs would not pose a substantial present or potential future hazard to human health and the environment, and are as low as reasonably achievable (ALARA). A review of alternatives to the requested action indicates that implementation of alternate methods would result in little net reduction of ground water constituent concentrations.

Conclusion

NRC staff concludes that approval of Sohio's amendment request to allow ACLs for ground water hazardous constituents will not cause significant health or environmental impacts. The following statements summarize the conclusions resulting from the EA:

1. Currently, all concentrations with the exception of uranium and selenium in a few POC wells will meet the established ground-water background values for the site at the POC wells.

2. Due to the attenuation capability of the formations through which the acidic ground-water plume will move, the residual amounts of uranium and selenium will be reduced to background levels that will not pose any greater health risk than that assigned to the maximum concentration limits for ground-water protection.

3. The POCs are located along the site boundary of the restricted area that will be maintained by the long-term care custodian (most likely the U.S. Department of Energy) following termination of Sohio's license for the L-Bar site.

4. Ground water use from the First Tres Hermanos Sandstone and Mancos

Shale is unlikely because of the low volume available in these units, and the already poor background water quality. Ground water used in the area is taken from deeper aquifers with better quality water and higher, sustainable well yields.

5. Additional corrective actions will have little effect on dewatering of the tailings or removal of contaminants and, therefore, will have little impact on the ground-water quality.

Because the staff has determined that there will be no significant impacts associated with approval of the amendment request, there can be no disproportionately high and adverse effects or impacts on minority and low-income populations. Except in special cases, these impacts need not be addressed for EAs in which a FONSI is made. Special cases may include regulatory actions that have substantial public interest, decommissioning cases involving onsite disposal in accordance with 10 CFR 20.2002, decommissioning/decontamination cases which allow residual radioactivity in excess of release criteria, or cases where environmental justice issues have been previously raised. Consequently, further evaluation of environmental justice concerns, as outlined in NRC's Office of Nuclear Material Safety and Safeguards Policy and Procedures Letter 1–50, Rev.1, is not warranted.

Alternatives to the Proposed Action

Since the licensee has demonstrated that the proposed ACL values will not pose substantial present or potential hazards to human health and the environment, and that the proposed ACLs are ALARA, considering practicable corrective actions, establishing other standards more stringent than the proposed ACLS was not evaluated. Furthermore, since NRC staff has concluded that there are no significant environmental impacts associated with the proposed action, any alternatives with equal or greater environmental impacts need not be evaluated. The principal alternative to the proposed action would be to deny the requested action. The licensee evaluated various alternatives, including continuation of the CAP, and demonstrated that those alternatives would result in little net reduction of constituent concentrations. Because the environmental impacts of the proposed action and the no-action alternative are similar, there is no need to further evaluate alternatives to the proposed action.

Finding of No Significant Impact

NRC staff has prepared an EA for this action. On the basis of this assessment, NRC staff has concluded that the environmental impacts that may result from this action would not be significant, and therefore, preparation of an Environmental Impact Statement is not warranted.

The EA and other documents related to this action are being made available for public inspection at NRC's Public Document Room at 2120 L Street, NW (Lower Level), Washington, DC 20555.

NRC hereby provides notice of an opportunity for a hearing on the license amendment under the provisions of 10 CFR Part 2, Subpart L, ''Informal Hearing Procedures for Adjudications in Materials and Operator Licensing Proceedings.'' Pursuant to § 2.1205(a), any person whose interest may be affected by this proceeding may file a request for a hearing. In accordance with § 2.1205(c), a request for hearing must be filed within 30 days of the publication of this notice in the **Federal Register**. The request for a hearing must be filed with the Office of the Secretary, either:

(1) By delivery to the Docketing and Service Branch of the Office of the Secretary at One White Flint North, 11555 Rockville Pike, Rockville, MD 20852; or

(2) By mail or telegram addressed to the Secretary, U.S. Nuclear Regulatory Commission, Washington, DC 20555, Attention: Docketing and Service Branch.

In accordance with 10 CFR 2.1205(e), each request for a hearing must also be served, by delivering it personally or by mail, to:

(1) The applicant, Kennecott Energy Company (on behalf of Sohio Western Mining Company), 505 South Gillette Avenue, Gillette, Wyoming 82717–3009, Attention: John Trummel; and

(2) NRC staff, by delivery to the Executive Director for Operations, One White Flint North, 11555 Rockville Pike, Rockville, MD 20852, or by mail addressed to the Executive Director for Operations, U.S. Nuclear Regulatory Commission, Washington, DC 20555.

In addition to meeting other applicable requirements of 10 CFR Part 2 of NRC's regulations, a request for a hearing filed by a person other than an applicant must describe in detail:

(1) The interest of the requestor in the proceeding;

(2) How that interest may be affected by the results of the proceeding, including the reasons why the requestor should be permitted a hearing, with particular reference to the factors set out in § 2.1205(g);

(3) The requestor's areas of concern about the licensing activity that is the subject matter of the proceeding; and

(4) The circumstances establishing that the request for a hearing is timely in accordance with § 2.1205(c).

The request must also set forth the specific aspect or aspects of the subject matter of the proceeding as to which petitioner wishes a hearing.

Dated at Rockville, Maryland, this 25th day of February, 1999.

For the Nuclear Regulatory Commission.

N. King Stablein,

Acting Chief, Uranium Recovery Branch, Division of Waste Management, Office of Nuclear Material Safety and Safeguards.

[FR Doc. 99–5198 Filed 3–2–99; 8:45 am]

BILLING CODE 7590–01–P

NUCLEAR REGULATORY COMMISSION

[Docket 72–1026]

Westinghouse Electric Company Issuance of Environmental Assessment and Finding of No Significant Impact Regarding the Proposed Exemption From Requirements of 10 CFR Part 72

By letter dated October 5, 1998, Westinghouse Electric Company (Westinghouse or applicant) requested an exemption, pursuant to 10 CFR 72.7, from the requirements of 10 CFR 72.234(c). Westinghouse, located in San Jose, California, is seeking Nuclear Regulatory Commission (NRC or the Commission) approval to procure materials for and fabricate seven W21 canisters, seven W74 canisters, and one W100 transfer cask prior to receipt of a Certificate of Compliance (CoC) for the Wesflex Spent Fuel Management System (Wesflex System). The Wesflex canisters and the W100 transfer cask are basic components of the Wesflex System, a cask system designed for the dry storage and transportation of spent fuel. The Wesflex System is intended for use under the general license provisions of Subpart K of 10 CFR Part 72 by Consumers Energy at the Palisades Nuclear Plant, located in Covert, Michigan, and at the Big Rock Point Nuclear Plant, located in Charlevoix, Michigan. The application for the CoC was submitted by Westinghouse to the Commission on February 3, 1998, as supplemented.

Environmental Assessment (EA)

Identification of Proposed Action

Westinghouse is seeking Commission approval to procure materials for and fabricate seven W21 canisters, seven

W74 canisters, and one W100 transfer cask prior to receipt of the CoC. The applicant is requesting an exemption from the requirements of 10 CFR 72.234(c), which states that ''Fabrication of casks under the Certificate of Compliance must not start prior to receipt of the Certificate of Compliance for the cask model.'' The proposed action before the Commission is whether to grant this exemption under 10 CFR 72.7.

Need for the Proposed Action

Westinghouse requested the exemption to 10 CFR 72.234(c) to ensure the availability of storage casks so that Consumers Energy can maintain full core offload capability at the Palisades Nuclear Plant. Palisades will lose full core offload capability after its planned April 2001 refueling outage. Currently, the Ventilated Storage Cask–24 (VSC–24), fabricated by Sierra Nuclear Corporation, is used at Palisades for the dry storage of spent fuel. However, the licensee requires another cask option because the storage capability of the VSC–24 is limited by its burnup and enrichment requirements. Beyond April 2001, a significant portion of the remaining and future spent fuel inventory at Palisades will not meet the VSC–24 burnup and enrichment limits. Already, there are nearly 250 spent fuel assemblies at Palisades that do not qualify for storage in the VSC–24. Further, the licensee sees the need to replace the VSC–24 because it is not a transportable cask design.

Westinghouse is also requesting the exemption to ensure the availability of dry storage casks at Big Rock Point to support its decommissioning schedule. The Big Rock Point decommissioning schedule requires that all fuel be loaded into dry storage casks by 2002.

To maintain full core offload at Palisades and to meet Big Rock Point's decommissioning schedule, Consumers Energy anticipates that fuel loading of Wesflex Systems would need to begin in 2001 at both sites. Thus, at both Palisades and Big Rock Point, the availability of the Wesflex System is needed in May 2000 to support training and dry runs in anticipation of loading fuel in the following year. To meet this schedule, procurement of the W100 transfer cask materials must begin promptly and fabrication must begin by mid-1999. Further, procurement of the W21 and W74 canister materials must begin by August 1999 and fabrication must begin by November 1999.

The Wesflex System CoC application is under consideration by the Commission. It is anticipated that, if approved, the CoC would be issued in late 2000.

The proposed procurement and fabrication exemption will not authorize use of the Wesflex System to store spent fuel. That will occur only when, and if, a CoC is issued. NRC approval of the procurement and fabrication exemption request should not be construed as an NRC commitment to favorably consider Westinghouse's application for a CoC. Westinghouse will bear the risk of all activities conducted under the exemption, including the risk that the 14 canisters and 1 transfer cask that Westinghouse plans to construct may not be usable because they may not meet specifications or conditions placed in a CoC that NRC may ultimately approve.

Environmental Impacts of the Proposed Action

The Environmental Assessment for the final rule, ''Storage of Spent Nuclear Fuel in NRC-Approved Storage Casks at Nuclear Power Reactor Sites'' (55 FR 29181 (1990)), considered the potential environmental impacts of casks which are used to store spent fuel under a CoC and concluded that there would be no significant environmental impacts. The proposed action now under consideration would not permit use of the Wesflex System, but only procurement and fabrication. There are no radiological environmental impacts from procurement or fabrication since the canister and transfer cask material procurement and fabrications do not involve radioactive materials. The major non-radiological environmental impacts involve use of natural resources due to fabrication. Each W21 or W74 canister weighs approximately 22 tons and is made of steel. Each W100 transfer cask weighs approximately 60 tons and is mainly made of steel. The amount of steel required for these canisters and transfer cask is expected to have very little impact on the steel industry. Fabrication would be at a metal fabrication facility, not at the reactor site. Fabrication of the canisters and transfer cask is insignificant compared to the amount of metal fabrication performed annually in the United States. If the canisters and transfer cask are not usable, they could be disposed of or recycled. The amount of material disposed of is insignificant compared to the amount of steel that is disposed of annually in the United States. Based upon this information, the procurement of materials and fabrication of the canisters and transfer cask will have no significant impact on the environment since no radioactive materials are involved, and the amount of natural resources used is minimal.

Alternative to the Proposed Action

Since there is no significant environmental impact associated with the proposed action, any alternatives with equal or greater environmental impact are not evaluated. The alternative to the proposed action would be to deny approval of the exemption and, therefore, not allow procurement of materials and fabrication of the canisters and transfer cask until a CoC is issued. This alternative would have the same, or greater, environmental impact.

Given that there are no significant differences in environmental impacts between the proposed action and the alternative considered and that the applicant has a legitimate need to procure materials and fabricate prior to certification and is willing to assume the risk that any material procured or any canister or transfer cask fabricated may not be approved or may require modification, the Commission concludes that the preferred alternative is to approve the procurement and fabrication request and grant the exemption from the prohibition on fabrication prior to receipt of a CoC.

Agencies and Persons Consulted

An official from the Michigan Department of Environmental Quality was contacted about the EA for the proposed action and had no comments.

Finding of No Significant Impact

The environmental impacts of the proposed action have been reviewed in accordance with the requirements set forth in 10 CFR Part 51. Based upon the foregoing EA, the Commission finds that the proposed action of granting an exemption from 10 CFR 72.234(c) so that Westinghouse may procure materials for and fabricate seven W21 canisters, seven W74 canisters, and one W100 transfer cask prior to issuance of a CoC for the Wesflex System will not significantly impact the quality of the human environment. Accordingly, the Commission has determined not to prepare an environmental impact statement for the proposed exemption.

The request for the exemption to 10 CFR 72.234(c) was filed by Westinghouse on October 5, 1998, and supplemented by Consumers Energy on November 18, 1998. For further details with respect to this action, see the application for a CoC for the Wesflex System, dated February 3, 1998, as supplemented March 4, March 18, August 21, August 27, September 2, and September 3, 1998. The exemption request and CoC application are

docketed under 10 CFR Part 72, Docket 72–1026. The exemption request and the non-proprietary version of the CoC application are available for public inspection at the Commission's Public Document Room, 2120 L Street, NW, Washington, DC 20555.

Dated at Rockville, Maryland, this 18th day of February, 1999.

For the Nuclear Regulatory Commission.

E. William Brach,

Director, Spent Fuel Project Office, Office of Nuclear Material Safety and Safeguards.

[FR Doc. 99–5199 Filed 3–2–99; 8:45 am]

BILLING CODE 7590–01–P

NUCLEAR REGULATORY COMMISSION

Advisory Committee on the Medical Uses of Isotopes: Meeting Notice

AGENCY: U.S. Nuclear Regulatory Commission.

ACTION: Notice of meeting.

SUMMARY: The U.S. Nuclear Regulatory Commission will convene a meeting of the Advisory Committee on the Medical Uses of Isotopes on March 24–25, 1999. The meeting will take place at the address provided below. Topics of discussion will include revisions to proposed 10 CFR Part 35, ''Medical Use of Byproduct Material''; analysis of comments on the draft rule text that were received during the public comment period; and issues associated with prostate implant therapy. All sessions of the meeting will be open to the public with the exception of the first session, which has been set aside to provide required Annual Ethics Training for committee members. This session will be closed to discuss information, the release of which would constitute a clearly unwarranted invasion of personal privacy.

DATES: The March 24, 1999, meeting will be held from 9:00 a.m. to 5:00 p.m. to accommodate Annual Ethics Training for members from 8:00 to 9:00 a.m. The March 25, 1999, meeting will be held from 8:00 a.m. to 12:00 p.m.

ADDRESSES: U.S. Nuclear Regulatory Commission, Two White Flint North Auditorium, 11545 Rockville Pike, Rockville, MD 20852–2738.

FOR FURTHER INFORMATION, CONTACT: Mary Louise Roe, U.S. Nuclear Regulatory Commission, Office of Nuclear Material Safety and Safeguards, MS T9F31, Washington, DC 20555, Telephone (301) 415–7809, e-mail mlr1@nrc.gov.

Conduct of the Meeting

Judith Stitt, M.D., will chair the meeting. Dr. Stitt will conduct the meeting in a manner that will facilitate the orderly conduct of business. The following procedures apply to public participation in the meeting:

1. Persons who wish to provide a written statement should submit a reproducible copy to Mary Louise Roe (address listed previously), by March 19, 1999. Statements must pertain to the topics on the agenda for the meeting. Electronic submissions may be sent to mlr1@nrc.gov.

2. Questions from members of the public will be permitted, during the meeting, at the discretion of the Chairman.

3. The transcript and written comments will be available for inspection, and copying, for a fee, at the NRC Public Document Room, 2120 L Street, NW, Lower Level, Washington, DC 20003–1527, telephone (202) 634–3273, on or about April 19, 1999. Minutes of the meeting will be available on or about May 18, 1999.

4. Seating for the public will be on a first-come, first-served basis.

This meeting will be held in accordance with the Atomic Energy Act of 1954, as amended (primarily Section 161a); the Federal Advisory Committee Act (5 U.S.C. App); and the Commission's regulations in Title 10, *U.S. Code of Federal Regulations*, Part 7.

Dated: February 25, 1999.

Andrew L. Bates,

Advisory Committee Management Officer.

[FR Doc. 99–5197 Filed 3–2–99; 8:45 am]

BILLING CODE 7590–01–P

DEPARTMENT OF STATE

[Public Notice No: 2984]

Advisory Committee on Historical Diplomatic Documentation; Notice of Meeting

Reissue Public Notice Number 2971, 64 FR 7938 (published February 17, 1999) with a new location as Public Notice No. 2984.

The Advisory Committee on Historical Diplomatic Documentation will meet in the State Annex-1, Conference Room L315, at 2401 E Street NW, Washington, D.C.

Dated: February 22, 1999.

William Z. Slany,

Executive Secretary.

[FR Doc. 99–5256 Filed 3–2–99; 8:45 am]

BILLING CODE 4710–45–U

STATE DEPARTMENT

[Public Notice #2990]

Overseas Presence Advisory Panel (OPAP) Meeting; Closed Meeting

The Department of State announces a meeting of the Overseas Presence Advisory Panel on Tuesday, March 9, 1999 at 9:00 a.m. at the U.S. Department of State. The panel is charged with advising the Secretary of State with respect to the level and type of representation required overseas in the face of new foreign policy priorities, a heightened security situation and extremely limited resources. Pursuant to Section 10(d) of the Federal Advisory Committee Act and 5 U.S.C. 552b[c] [1], it has been determined the meeting will be closed to the public. The agenda calls for the discussion of classified and sensitive information relative to intelligence and operational policies of all the U.S. Government agencies at Embassies and Consulates the Department of State supports abroad.

The Department regrets the short notice due to the urgency of the issues and coordination of multiple schedules.

For more information contact Peter Petrihos, Overseas Presence Advisory Panel, Department of State, Washington, DC 20520; phone: 202–647–6477.

Dated: February 25, 1999.

Ambassador William H. Itoh,

Executive Secretary, Overseas Presence Advisory Panel.

[FR Doc. 99–5257 Filed 3–1–99; 11:09 am]

BILLING CODE 4710–35–P

DEPARTMENT OF TRANSPORTATION

Office of the Secretary

Reports, Forms and Recordkeeping Requirements, Agency Information Collection Activity Under OMB Review

AGENCY: Office of the Secretary, DOT.

ACTION: Notice and request for comments.

SUMMARY: In compliance with the Paperwork Reduction Act of 1995 (44 U.S.C. 3501 *et seq.*), this notice announces that the Information Collection (ICR) abstracted below has been forwarded to the Office of Management and Budget (OMB) for review and comment. The ICR describes the nature of the information collection and its expected burden. The **Federal Register** Notice with a 60-day comment period soliciting comments on the following collection of information was published on December 7, 1998, (63 FR 67504).

DATES: Comments must be submitted on or before April 2, 1999.

FOR FURTHER INFORMATION CONTACT: Judith Street, ABC–100; Federal Aviation Administration; 800 Independence Avenue, SW.; Washington, DC 20591; Telephone number (202) 267–9895.

SUPPLEMENTARY INFORMATION:

Federal Aviation Administration (FAA)

Title: 14 CFR Part 150—Airport Noise Compatibility Planning.

OMB Control Number: 2120–0517.

Type of Request: Extension of currently approved collection.

Affected Public: Airport operators voluntarily submitting noise exposure maps and noise compatibility programs to the FAA for review and approval.

Abstract: FAA approval makes airport operators' noise compatibility programs eligible for a 10 percent set-aside of discretionary grant funds under the FAA Airport Improvement Program. The respondents are an estimated 17 state and local governments (airport operators).

Annual Estimated Burden Hours: 54,900.

ADDRESSES: Send comments to the Office of Information and Regulatory Affairs, Office of Management and Budget, 725–17th Street, NW., Washington, DC 20503, Attention FAA Desk Officer.

Comments are Invited on: whether the proposed collection of information is necessary for the proper performance of the functions of the Department, including whether the information will have practical utility; the accuracy of the Department's estimate of the burden of the proposed information collection; ways to enhance the quality, utility and clarity of the information to be collected; and ways to minimize the burden of the collection of information on respondents, including the use of automated collection techniques or other forms of information technology. A comment to OMB is most effective if OMB receives it within 30 days of publication.

Issued in Washington, DC on February 26, 1999.

Vanester M. Williams,

Clearance Officer, United States, Department of Transportation.

[FR Doc. 99–5273 Filed 3–2–99; 8:45 am]

BILLING CODE 4910–13–P

DEPARTMENT OF TRANSPORTATION

Office of the Secretary

Reports, Forms and Recordkeeping Requirements; Agency Information Collection Activity Under OMB Review

AGENCY: Office of the Secretary, DOT.

ACTION: Notice.

SUMMARY: In accordance with the Paperwork Reduction Act of 1995 (44 U.S.C. Chapter 3501, *et seq.*) the Department of Transportation has submitted the following Information Collection Request (ICR) abstracted below to the Office of Management and Budget (OMB) for review and clearance. The ICR describes the nature of the information collection and its expected burden. In the Notice of Proposed Rulemaking that was published on January 19, 1995 [FR 60, page 3778–3783], the Department stated that the proposed rule did not contain information collection requirements that required approval by OMB under the then current Paperwork Reduction Act. However, the requirements under the Paperwork Reduction Act of 1995 consider third party notifications as data collections and thus subject to the regulations. A final rule is expected to be published soon and submitted to the Office of Management and Budget for review.

FOR FURTHER INFORMATION CONTACT: Jack Schmidt, Office for Aviation and International Economics (X–10), Office of the Assistant Secretary for Aviation and International Affairs, Office of the Secretary, U.S. Department of Transportation, 400 Seventh Street, SW., Washington, DC 20590, 202/366–5420 or 202/366–7638 (FAX).

DATES: Comments on this notice must be received on or before April 2, 1999.

SUPPLEMENTARY INFORMATION:

Office of the Secretary

Title: Disclosure of Change-of-Gauge Services.

OMB Control Number: 2105-NEW.

Type of Request: Approval of a new information collection.

Affected Public: U.S. air carriers and foreign air carriers, travel agents and the traveling public.

Abstract: The final rule will codify and strengthen the Department's current consumer notification rules and policies to ensure that consumers have pertinent information about airline change-of-gauge services. Change-of-gauge service is scheduled passenger service for which the operating airline uses one single flight number even though passengers do not travel in the same aircraft from origin to destination but must change planes at an intermediate stop. From an operational perspective, there are several kinds of change-of-gauge services. The simplest example is a one-flight-to-one-flight service that uses the same flight number even though a plan change is required en route. Change-of-gauge services can offer significant economic benefits. However, these flights can confuse and mislead consumers. Therefore, consumers will benefit from this regulation because, during the process of selecting, purchasing and completing their trips, they will be better informed of the fact that they will be required to change aircraft at an intermediate point on their journey. The requirements of the regulations apply to travel agents doing business in the United States, U.S. air carriers and foreign air carriers, and their implementation will result in increased costs on these groups. The Department has considered other alternatives but has found that the final rule that will be issued provides the best public benefit. In this regulatory analysis, the Department has evaluated the benefits and costs and has decided that the benefits justify the increased costs.

Estimated Annual Burden Hours: 102,954–308,861.

ADDRESSES: Send comments to the Office of Information and Regulatory Affairs, Office of Management and Budget, 725—17th Street, NW.,Washington, DC 20503, Attention OST Desk Officer.

Comments are invited on: whether the proposed collection of information (third party notification) is necessary for the proper performance of the functions of the Department, including whether the information will have practical utility; the accuracy of the Department's estimate of the burden of the proposed information collection; ways to enhance the quality, utility and clarity of the information to be collected; and ways to minimize the burden of the collection of information on respondents, including the use of automated collection techniques or other forms of information technology.

Comments to OMB are best assured of having their full effect if OMB receives them within 30 days of publication.

Issued in Washington, DC on February 26, 1999.

Vanester M. Williams,

Clearance Officer, Department of Transportation.

[FR Doc. 99–5274 Filed 3–2–99; 8:45 am]

BILLING CODE 4910–62–P

DEPARTMENT OF TRANSPORTATION

Federal Highway Administration

Environmental Impact Statement: Jackson County, Oregon

AGENCY: Federal Highway Administration (FHWA), DOT.

ACTION: Notice of intent.

SUMMARY: The FHWA is issuing this notice to advise the public that an Environmental Impact Statement (EIS) will be prepared for a proposed transportation improvement in the City of Medford, Jackson County, Oregon.

FOR FURTHER INFORMATION CONTACT: Ivan Marrero, Liaison Engineer Region 3, Federal Highway Administration, Equitable Center, 530 Center Street, N.E., Suite 100, Salem, Oregon 97301, Telephone: (503) 399–5749, Ivan.Marrero@fhwa.dot.gov.

SUPPLEMENTARY INFORMATION: The FHWA, in cooperation with the Oregon Department of Transportation (ODOT), will prepare an environmental impact statement (EIS) on a proposal to solve the long-term (year 2020) transportation demands and congestion in the Interstate 5/Barnett Road (South Medford) Interchange Area. Congestion on Barnett Road is impacting existing business and industry and has the potential to curtail future economic development in the area. Improvements are considered necessary to provide for existing and projected traffic demands and a safe and efficient transportation system meeting modern AASHTO design standards.

Alternatives will be developed as part of the project development process that will be incorporated into the EIS. Alternatives may include one or more of the following: taking no action (no build); improving the Interstate 5/Barnett Road Interchange; constructing new roadways to provide for additional local circulation and/or widening existing roadways to reduce congestion on the Interstate 5/Barnett Road Interchange; developing new access across Interstate 5; improved transit service to the area; using Transportation System Management and Transportation Demand Management measures to alleviate traffic congestion; and modifying land use to reduce congestion. Potential impacts and/or improvements to the Bear Creek Greenway regional bicycle and pedestrian facility will also be considered.

Information describing the proposed action and soliciting comments will be sent to appropriate Federal, State and local agencies, and to private organizations and citizens who have expressed or are known to have an interest in this proposed project. A local formal scoping meeting is scheduled on March 18, 1999, 4 pm to 7 pm at the Scottish Right Temple, 955 North Phoenix Road, Medford, Oregon.

Public informational meetings will be held by ODOT during project development and a public hearing will be scheduled. The draft EIS will be available for public and agency review and comments prior to the public hearing.

To ensure that the full range of issues related to this proposed action are addressed and all significant issues identified, comments, and suggestions are invited from all interested parties. Comments or questions concerning this proposed action and the EIS should be directed to the FHWA at the address provided above.

(Catalog of Federal Domestic Assistance Program Number 20.205, Highway Planning and Construction. The regulations implementing Executive Order 12372 regarding intergovernmental consultation on Federal programs and activities apply to this program)

Issued: February 22, 1999.

Elton H. Chang,

Environmental Engineer, Oregon Division.

[FR Doc. 99–5144 Filed 3–2–99; 8:45 am]

BILLING CODE 4910–22–M

DEPARTMENT OF TRANSPORTATION

Federal Aviation Administration

Aviation Rulemaking Advisory Committee Meeting on Airport Certification Issues

AGENCY: Federal Aviation Administration (FAA), DOT.

ACTION: Notice of meeting cancellation.

SUMMARY: The FAA is issuing this notice to advise the public that the March 9 meeting of the Federal Aviation Administration Aviation Rulemaking Advisory Committee, scheduled to discuss Airport Certification Issues (64 FR 8634; 2/22/99), has been cancelled.

FOR FURTHER INFORMATION CONTACT: Marisa Mullen, (202) 267–7653, Office of Rulemaking (ARM–200), 800 Independence Avenue, SW, Washington, DC 20591.

Issued in Washington, DC, on February 24, 1999.

Robert E. David,

Assistant Executive Director for Airport Certification Issues, Aviation Rulemaking Advisory Committee.

[FR Doc 99–5251 Filed 3–2–99; 8:45 am]

BILLING CODE 4910–13–M

DEPARTMENT OF TRANSPORTATION

Federal Highway Administration

[FHWA Docket No. FHWA–99–5012]

Notice of Availability of a Draft Programmatic Environmental Assessment for the Nationwide Differential Global Positioning System Service

AGENCY: Federal Highway Administration (FHWA), DOT.

ACTION: Notice; request for comments.

SUMMARY: The Secretary of Transportation (Secretary) has been authorized by Congress, pursuant to section 346 of the U. S. Department of Transportation (DOT) and Related Agencies Appropriations Act, 1998, Pub. L. 105–66 (October 27, 1997), to establish, operate, and manage a nationwide system to be known as the Nationwide Differential Global Positioning System (NDGPS) as soon as practicable, to integrate the NDGPS stations into the Continuously Operating Reference Station (CORS) system of the National Geodetic Survey of the Department of Commerce, and to investigate the use of the NDGPS reference stations for the Global Positioning System Integrated Precipitable Water Vapor System of the National Oceanic and Atmospheric Administration (NOAA) of the Department of Commerce. A draft Programmatic Environmental Assessment (PEA) for the NDGPS program is available for public review and comment. The FHWA seeks public comment on this draft from all interested parties.

DATES: Comments must be received on or before April 2, 1999.

ADDRESSES: Your signed, written comments must refer to the docket number appearing at the top of this document and you must submit the comments to the Docket Clerk, U.S. DOT Dockets, Room PL–401, 400 Seventh Street, SW., Washington, DC 20590–0001. All comments received will be available for examination at the above address between 9 a.m. and 5 p.m., e.t., Monday and Friday, except Federal holidays. Those desiring notification of receipt of comments must include a self-addressed stamped envelope or postcard.

FOR FURTHER INFORMATION CONTACT: For the FHWA program office: Written requests for a copy of the draft PEA should be submitted to: Mr. James A. Arnold, (703) 285–2974, Federal Highway Administration, Turner-Fairbank Highway Research Center,

HSR–12, 6300 Georgetown Pike, McLean, VA 22101–2296. For legal issues: Mr. Brett Gainer, Office of the Chief Counsel, HCC–31, (202) 366–6197, Federal Highway Administration, 400 Seventh Street, SW., Washington, DC 20590. Office hours are from 8 a.m. to 4:30 p.m., e.t., Monday through Friday, except Federal holidays.

SUPPLEMENTARY INFORMATION:

Electronic Access

Internet users can access all comments received by the U.S. DOT Dockets, Room PL–401, by using the universal resource locator (URL): http://dms.dot.gov. It is available 24 hours a day, 365 days each year. Please follow the instructions online for more information and help.

An electronic copy of this document may be downloaded using a modem and suitable communications software from the Government Printing Office's Electronic Bulletin Board Service at (202) 512–1661. Internet users may reach the **Federal Register**'s home page at: http://www.nara.gov/fedreg and the Government Printing Office's database at: http://www.access.gpo.gov/nara.

An electronic copy of the draft Programmatic Environmental Assessment (PEA) for the NDGPS program is available at http://www.navcen.uscg.mil/.

Background

The Secretary has delegated his authority under section 346 of the DOT Appropriations Act for FY 1998, to the Commandant of the United States Coast Guard (USCG), the Federal Railroad Administration (FRA), and the FHWA. The FHWA is the lead agency and the USCG and FRA are cooperating agencies for the implementation of the National Environmental Policy Act of 1969 (NEPA), 42 U.S.C. 4332(2)(C) and 23 CFR 771. In accordance with NEPA, the FHWA is preparing a PEA for the NDGPS program. A draft PEA for NDGPS is available for public review and comment. After receipt of public comments, a final PEA will be prepared which will provide a basis for the FHWA and the cooperating agencies to determine whether a Programmatic Environmental Impact Statement (PEIS) is required, or if a Finding of No Significant Impact (FONSI) is appropriate. Copies of the draft PEA will be provided to Federal, State, local agencies, and the public. All interested parties may comment on the NDGPS draft PEA.

The NDGPS service would augment existing satellite-based Global Positioning System range information with a differential correction broadcast from ground-based reference stations transmitting from known positions, thereby providing users with more precise radio navigation and positioning information for public safety, transportation, scientific, and environmental applications. Federal agencies implementing the proposed NDGPS service are the DOT's Office of the Secretary of Transportation (OST), the FHWA, the FRA, the NOAA, the U.S. Air Force (USAF), the U.S. Army Corps of Engineers (USACE), and the USCG.

The NDGPS involves the expansion of an existing network of USCG local area Differential Global Positioning System (DGPS) reference stations currently covering United States coastal areas and major inland waterways. To expand this existing DGPS service nationwide, the installation of additional reference stations with low-frequency transmit antennas is required on suitable 11-acre land parcels located principally in the interior portions of the continental Unites States and Alaska. Sites will typically be on level ground and away from tall structures. Three deployment alternatives for the additional NDGPS reference stations were considered in the draft PEA.

Alternative A consists of conversion of 32 decommissioned USAF Ground Wave Emergency Network (GWEN) sites for use as NDGPS reference stations and the transfer of GWEN equipment from remaining GWEN sites to 28 new NDGPS site locations. Seven additional sites would receive similar new equipment, for a total of 67 NDGPS reference stations. The GWEN transmit antennas to be used are typically 299 feet tall guyed towers and will be operated at an effective radiated power (ERP) of no more than 500 Watts.

Alternative B consists of the installation of new equipment at 32 existing GWEN relay node sites, as well as at 35 new sites. The resulting NDGPS reference stations would be physically similar to the reference stations of Alternative A.

Alternative C is to identify 80 to 100 new sites and install equipment similar to USCG local area DGPS stations. These reference stations would utilize either 90 feet or 120 feet tall towers and operate at an ERP of no more than 170 Watts. The NDGPS is expected to be fully operational in the United States by the year 2002.

During the selection of sites for the NDGPS reference stations, the FHWA and cooperating agencies will consult with key regulatory agencies and apply environmental site-selection criteria to avoid potentially significant impacts. If a potentially significant environmental impact is unavoidable during the selection of sites for the NDGPS reference stations, specific mitigation measures will be implemented to decrease the impact to a less than significant level. Provided that environmental site-selection criteria and specific mitigation measures identified in the draft PEA are implemented for the NDGPS, no significant environmental impacts are anticipated to occur under any of the proposed action alternatives. If planned mitigation measures for potentially significant impacts cannot be implemented at a specific site, or a site-specific impact is encountered that was not anticipated and addressed in the PEA, then additional appropriate NEPA analysis and documentation will be prepared by the FHWA for that specific reference station.

(Authority: 23 U.S.C. 315; sec 346, Pub. L. 105–66, 111 Stat. 1425, 1449 (1997); 49 CFR 1.48.)

Issued on: February 23, 1999.

Kenneth R. Wykle,

Federal Highway Administrator.

[FR Doc. 99–5272 Filed 3–2–99; 8:45 am]

BILLING CODE 4910–22–P

DEPARTMENT OF TRANSPORTATION

Maritime Administration

[Docket No. MARAD–99–5145]

Information Collection Available for Public Comments and Recommendations

ACTION: Notice and request for comments.

SUMMARY: In accordance with the Paperwork Reduction Act of 1995 this notice announces the Maritime Administration's (MARAD's) intentions to request extension of approval for three years of a currently approved information collection.

DATES: Comments should be submitted on or before May 3, 1999.

FOR FURTHER INFORMATION CONTACT: Edmund T. Sommer, Jr., Chief, Division of General and International Law, Office of the Chief Counsel, Maritime Administration, MAR–221, Room 7232, 400 Seventh Street, SW, Washington, D.C. 20590, telephone 202–366–5181 or fax 202–366–7485. Copies of this collection can also be obtained from that office.

SUPPLEMENTARY INFORMATION:

Title of Collection: Procedures, New Subpart B—Application for Designation of Vessels as American Great Lakes Vessels.

Type of Request: Extension of a currently approved information collection.

OMB Control Number: 2133–0521.

Form Number: None.

Expiration Date of Approval: October 31, 1999.

Summary of Collection of Information: Public Law 101–624 directs the Secretary of Transportation to issue regulations that establish requirements for the submission of applications by owners of ocean vessels for designation as ''American Great Lakes Vessels.''

Need and Use of the Information: Application is mandated by statute to establish that a vessel meets statutory criteria for obtaining the benefit of eligibility to carry preference cargoes.

Description of Respondents: Shipowners of merchant vessels.

Annual Responses: 1 response.

Annual Burden: 1.25 hours.

Comments: Signed written comments should refer to the docket number that appears at the top of this document and must be submitted to the Docket Clerk, U.S. DOT Dockets, Room PL–401, 400 Seventh Street, SW, Washington, D.C. 20590. Specifically, address whether this information collection is necessary for proper performance of the function of the agency and will have practical utility, accuracy of the burden estimates, ways to minimize this burden and ways to enhance quality, utility, and clarity of the information to be collected. All comments received will be available for examination at the above address between 10 a.m. and 5 p.m., ET. Monday through Friday, except Federal Holidays. An electronic version of this document is available on the World Wide Web at http://dms.dot.gov.

By Order of the Maritime Administrator.

Dated: February 25, 1999.

Michael J. McMorrow,

Acting Secretary.

[FR Doc. 99–5160 Filed 3–3–99; 8:45 am]

BILLING CODE 4910–81–P

DEPARTMENT OF TRANSPORTATION

Surface Transportation Board

[STB Finance Docket No. 33718]

Adrian & Blissfield Rail Road Company—Acquisition Exemption—Grand Trunk Western Railroad Incorporated

Adrian & Blissfield Rail Road Company (ADBF), a Class III rail carrier, has filed a notice of exemption under 49 CFR 1150.41 to acquire (by purchase) approximately 3.22 miles of rail line owned by Grand Trunk Western Railroad Incorporated (GTW) (known as the Charlotte Spur) between milepost 21.24 and milepost 24.46 at Charlotte, in Eaton County, MI (the Flint Subdivision).[1] ADBF will operate the property.

The earliest the transaction could be consummated was February 23, 1999, the effective date of the exemption (7 days after the exemption was filed).

If this notice contains false or misleading information, the exemption is void *ab initio*. Petitions to revoke the exemption under 49 U.S.C. 10502(d) may be filed at any time. The filing of a petition to revoke does not automatically stay the transaction.

An original and 10 copies of all pleadings, referring to STB Finance Docket No. 33718, must be filed with the Surface Transportation Board, Office of the Secretary, Case Control Unit, 1925 K Street, N.W., Washington, DC 20423–0001. In addition, a copy of each pleading must be served on Kenneth J. Bisdorf, 2301 West Big Beaver Road, Suite 600, Troy, MI 48084–3329.

Board decisions and notices are available on our website at ''WWW.STB.DOT.GOV.''

Decided: February 23, 1999.

By the Board, David M. Konschnik, Director, Office of Proceedings.

Vernon A. Williams,

Secretary.

[FR Doc. 99–4976 Filed 3–2–99; 8:45 am]

BILLING CODE 4915–00–P

[1] ADBF certifies that its annual revenue will not exceed those that would qualify it as a Class III rail carrier and that its annual revenues are not projected to exceed $5 million.

DEPARTMENT OF THE TREASURY

Internal Revenue Service

[CO–49–88]

Proposed Collection; Comment Request For Regulation Project

AGENCY: Internal Revenue Service (IRS), Treasury.

ACTION: Notice and request for comments.

SUMMARY: The Department of the Treasury, as part of its continuing effort to reduce paperwork and respondent burden, invites the general public and other Federal agencies to take this opportunity to comment on proposed and/or continuing information collections, as required by the Paperwork Reduction Act of 1995, Public Law 104–13 (44 U.S.C. 3506(c)(2)(A)). Currently, the IRS is soliciting comments concerning an existing final regulation, CO–49–88 (TD 8546), Limitations on Corporate Net Operating Loss (sec. 1.382–6).

DATES: Written comments should be received on or before May 3, 1999 to be assured of consideration.

ADDRESSES: Direct all written comments to Garrick R. Shear, Internal Revenue Service, room 5571, 1111 Constitution Avenue NW., Washington, DC 20224.

FOR FURTHER INFORMATION CONTACT: Requests for additional information or copies of the regulation should be directed to Martha R. Brinson, (202) 622–3869, Internal Revenue Service, room 5571, 1111 Constitution Avenue NW., Washington, DC 20224.

SUPPLEMENTARY INFORMATION:

Title: Limitations on Corporate Net Operating Loss.

OMB Number: 1545–1381.

Regulation Project Number: CO–49–88.

Abstract: This regulation provides rules for the allocation of a loss corporation's taxable income or net operating loss between the periods before and after an ownership change under section 382 of the Internal Revenue Code, including an election to make the allocation based on a closing of the books as of the change date.

Current Actions: There is no change to this existing regulation.

Type of Review: Extension of a currently approved collection.

Affected Public: Business or other for-profit organizations.

Estimated Number of Respondents: 2,000.

Estimated Time Per Respondent: 0.1 hr.

Estimated Total Annual Burden Hours: 200.

The following paragraph applies to all of the collections of information covered by this notice:

An agency may not conduct or sponsor, and a person is not required to respond to, a collection of information unless the collection of information displays a valid OMB control number. Books or records relating to a collection of information must be retained as long as their contents may become material in the administration of any internal revenue law. Generally, tax returns and tax return information are confidential, as required by 26 U.S.C. 6103.

Request for Comments: Comments submitted in response to this notice will be summarized and/or included in the request for OMB approval. All comments will become a matter of public record. Comments are invited on: (a) Whether the collection of

information is necessary for the proper performance of the functions of the agency, including whether the information shall have practical utility; (b) the accuracy of the agency's estimate of the burden of the collection of information; (c) ways to enhance the quality, utility, and clarity of the information to be collected; (d) ways to minimize the burden of the collection of information on respondents, including through the use of automated collection techniques or other forms of information technology; and (e) estimates of capital or start-up costs and costs of operation, maintenance, and purchase of services to provide information.

Approved: February 18, 1999.

Garrick R. Shear,

IRS Reports Clearance Officer.

[FR Doc. 99–5275 Filed 3–2–99; 8:45 am]

BILLING CODE 4830–01–P

DEPARTMENT OF THE TREASURY

Internal Revenue Service

[PS–62–87]

Proposed Collection; Comment Request For Regulation Project

AGENCY: Internal Revenue Service (IRS), Treasury.

ACTION: Notice and request for comments.

SUMMARY: The Department of the Treasury, as part of its continuing effort to reduce paperwork and respondent burden, invites the general public and other Federal agencies to take this opportunity to comment on proposed and/or continuing information collections, as required by the Paperwork Reduction Act of 1995, Public Law 104–13 (44 U.S.C. 3506(c)(2)(A)). Currently, the IRS is soliciting comments concerning an existing final regulation, PS–62–87 (TD 8302), Low-Income Housing Credit for Federally-assisted Buildings (sec. 1.42–2(d)).

DATES: Written comments should be received on or before May 3, 1999 to be assured of consideration.

ADDRESSES: Direct all written comments to Garrick R. Shear, Internal Revenue Service, room 5571, 1111 Constitution Avenue NW., Washington, DC 20224.

FOR FURTHER INFORMATION CONTACT: Requests for additional information or copies of the regulation should be directed to Martha R. Brinson, (202) 622–3869, Internal Revenue Service, room 5571, 1111 Constitution Avenue NW., Washington, DC 20224.

SUPPLEMENTARY INFORMATION:

Title: Low-Income Housing Credit for Federally-assisted Buildings.

OMB Number: 1545–1005.

Regulation Project Number: PS–62–87.

Abstract: This regulation provides state and local housing credit agencies and owners of qualified low-income buildings with guidance regarding compliance with the waiver requirement of section 42(d)(6) of the Internal Revenue Code. The regulation requires documentary evidence of financial distress leading to a potential claim against a Federal mortgage insurance fund in order to get a written waiver from the IRS for the acquirer of the qualified low-income building to properly claim the low-income housing credit.

Current Actions: There is no change to this existing regulation.

Type of Review: Extension of a currently approved collection.

Affected Public: Business or other for-profit organizations, individuals or households, not-for-profit institutions, and Federal, state, local or tribal governments.

Estimated Number of Respondents: 1,000.

Estimated Time Per Respondent: 3 hrs.

Estimated Total Annual Burden Hours: 3000.

The following paragraph applies to all of the collections of information covered by this notice:

An agency may not conduct or sponsor, and a person is not required to respond to, a collection of information unless the collection of information displays a valid OMB control number. Books or records relating to a collection of information must be retained as long as their contents may become material in the administration of any internal revenue law. Generally, tax returns and tax return information are confidential, as required by 26 U.S.C. 6103.

Request for Comments: Comments submitted in response to this notice will be summarized and/or included in the request for OMB approval. All comments will become a matter of public record. Comments are invited on: (a) Whether the collection of information is necessary for the proper performance of the functions of the agency, including whether the information shall have practical utility; (b) the accuracy of the agency's estimate of the burden of the collection of information; (c) ways to enhance the quality, utility, and clarity of the information to be collected; (d) ways to minimize the burden of the collection of information on respondents, including through the use of automated collection techniques or other forms of information technology; and (e) estimates of capital or start-up costs and costs of operation, maintenance, and purchase of services to provide information.

Approved: February 22, 1999.

Garrick R. Shear,

IRS Reports Clearance Officer.

[FR Doc. 99–5276 Filed 3–2–99; 8:45 am]

BILLING CODE 4830–01–P

UNITED STATES INFORMATION AGENCY

Culturally Significant Objects Imported for Exhibition Determinations: ''Ten Works of Art from the Republic of Korea''

ACTION: Notice.

SUMMARY: Notice is hereby given of the following determinations: Pursuant to the authority invested in me by the Act of October 19, 1965 (79 Stat. 985, 22 U.S.C. 2459), Executive Order 12047 of March 27, 1978 (43 F.R. 13359, March 29, 1978), and Delegation Order No. 85–5 of June 27, 1985 (50 F.R. 27393, July 2, 1985). I hereby determine that the ten works of art imported from abroad for temporary exhibition without profit within the United States, are of cultural significance. These objects are imported pursuant to loan agreements with a foreign lender. I also determine that the exhibition or display of the listed objects at The Asian Art Museum of San Francisco, from on or about March 25, 1999 to on or about February 20, 2001, is in the national interest.

Public Notice of these Determinations is ordered to be published in the **Federal Register**.

FOR FURTHER INFORMATION CONTACT: For a copy of the list of exhibit objects or other information, please contact, Paul Manning, Assistant General Counsel, Office of the General Counsel, 202/619–5997, and the address is Room 700, U.S. Information Agency, 301 4th Street, S.W., Washington, D.C. 20547–0001.

Dated: February 23, 1999.

Les Jin,

General Counsel.

[FR Doc. 99–4986 Filed 3–2–99; 8:45 am]

BILLING CODE 8230–01–M

federal register

Wednesday
March 3, 1999

Part II

Environmental Protection Agency

40 CFR Part 52

Findings of Significant Contribution and Rulemaking on Section 126; Petitions for Purposes of Reducing Interstate Ozone Transport, Technical Correction, and Notice of Availability of Additional Technical Documents; Proposed Rule

ENVIRONMENTAL PROTECTION AGENCY

40 CFR Part 52

[FRL–6305–9]

Findings of Significant Contribution and Rulemaking on Section 126; Petitions for Purposes of Reducing Interstate Ozone Transport, Technical Correction, and Notice of Availability of Additional Technical Documents

AGENCY: Environmental Protection Agency (EPA).

ACTION: Supplemental notice of proposed rulemaking (SNPR), technical correction, and notice of availability.

SUMMARY: In accordance with section 126 of the Clean Air Act (CAA), EPA is proposing action on recent requests from Maine and New Hampshire which ask EPA to now make findings of significant contribution under the 8-hour ozone standard regarding sources named in their August 1997 petitions. The EPA has previously proposed action on the petitions from these States with respect to the 1-hour ozone standard as part of a proposal on eight petitions that were submitted individually by eight Northeastern States (63 FR 52213, September 30, 1998; and 63 FR 56292, October 21, 1998). Today's action supplements that proposal.

These 8-hour petitions specifically request that EPA make a finding that nitrogen oxides (NO_X) emissions from certain stationary sources in other States significantly contribute to 8-hour ozone nonattainment problems in the petitioning State. If EPA makes such a finding of significant contribution, EPA is authorized to establish Federal emissions limits for the sources.

In this SNPR, EPA is proposing to find that portions of the Maine and New Hampshire petitions are approvable with respect to the 8-hour standard based solely on technical considerations. The EPA is proposing that the technically approvable portions of the petitions be deemed granted or denied at certain later dates pending certain actions by the States and EPA regarding State submittals in response to the final NO_X State implementation plan call (NO^X SIP call). The control requirements that would apply to sources in source categories for which a final finding will ultimately be granted were proposed in the October 21, 1998 notice of proposed rulemaking (NPR). The EPA is also proposing to deny portions of the petitions with respect to the 8-hour standard.

This SNPR also corrects inadvertent errors in Table II–1 and the part 52 regulatory text in the October 21, 1998 NPR.

In addition, today's SNPR provides notice of the availability of additional technical documents that have recently been placed in the NO_X SIP call docket.

The transport of ozone and its precursors is important because ozone, which is a primary harmful component of urban smog, has long been recognized, in both clinical and epidemiological research, to adversely affect public health.

DATES: The comment period on this SNPR ends on April 11, 1999. Comments must be postmarked by the last day of the comment period and sent directly to the Docket Office listed in **ADDRESSES** (in duplicate form if possible). A public hearing will be held on March 12, 1999 in Washington, DC, if requested. Please refer to **SUPPLEMENTARY INFORMATION** for additional information on the comment period and public hearing.

ADDRESSES: Comments may be submitted to the Air and Radiation Docket and Information Center (6102), Attention: Docket No. A–97–43, U.S. Environmental Protection Agency, 401 M Street SW, room M–1500, Washington, DC 20460, telephone (202) 260-7548. Comments and data may also be submitted electronically by following the instructions under **SUPPLEMENTARY INFORMATION** of this document. No confidential business information (CBI) should be submitted through e-mail.

Documents relevant to this action are available for inspection at the Docket Office, at the above address, between 8:00 a.m. and 5:30 p.m., Monday though Friday, excluding legal holidays. A reasonable copying fee may be charged for copying.

The public hearing, if there is one, will be held at the EPA Auditorium at 401 M Street SW, Washington, DC, 20460.

FOR FURTHER INFORMATION CONTACT: Questions concerning today's SNPR should be addressed to Carla Oldham, Office of Air Quality Planning and Standards, Air Quality Strategies and Standards Division, MD–15, Research Triangle Park, NC, 27711, telephone (919) 541–3347, email atoldham.carla@epa.gov.

SUPPLEMENTARY INFORMATION:

Public Hearing

The EPA will conduct a public hearing on the section 126 SNPR on March 5, 1999 beginning at 11:00 a.m., if requested by March 1, 1999. The EPA will not hold a hearing if one is not requested. Please check EPA's webpage at http://www.epa.gov/airlinks on March 2, 1999 for the announcement of whether the hearing will be held. If there is a hearing, it will be held at the EPA Auditorium at 401 M Street SW, Washington, DC, 20460. The metro stop is Waterfront, which is on the green line. Persons planning to present oral testimony at the hearings should notify JoAnn Allman, Office of Air Quality Planning and Standards, Air Quality Strategies and Standards Division, MD–15, Research Triangle Park, NC 27711, telephone (919) 541–1815, email allman.joann@epa.gov no later than March 1, 1999. Oral testimony will be limited to 5 minutes each. Any member of the public may file a written statement before, during, or by the close of the comment period. Written statements (duplicate copies preferred) should be submitted to Docket No. A–97–43 at the above address. The hearing schedule, including lists of speakers, will also be posted on EPA's webpage at http://www.epa.gov/airlinks prior to the hearing. A verbatim transcript of the hearing, if held, and written statements will be made available for copying during normal working hours at the Air and Radiation Docket and Information Center at the above address.

Availability of Related Information

The official record for this rulemaking, as well as the public version, has been established under docket number A–97–43 (including comments and data submitted electronically as described below). A public version of this record, including printed, paper versions of electronic comments, which does not include any information claimed as CBI, is available for inspection from 8:00 a.m. to 4:00 p.m., Monday through Friday, excluding legal holidays. The official rulemaking record is located at the address in **ADDRESSES** at the beginning of this document. Electronic comments can be sent directly to EPA at: A-and-R-Docket@epamail.epa.gov. Electronic comments must be submitted as an ASCII file avoiding the use of special characters and any form of encryption. Comments and data will also be accepted on disks in WordPerfect in 5.1/6.1 file format or ASCII file format. All comments and data in electronic form must be identified by the docket number A–97–43. Electronic comments on this SNPR may be filed online at many Federal Depository Libraries.

The EPA has issued a separate rule on NO_X transport entitled, ''Finding of Significant Contribution and Rulemaking for Certain States in the Ozone Transport Assessment Group

Region for Purposes of Reducing Regional Transport of Ozone'' (63 FR 57357, October 27, 1998) (see notices included in the docket for this rulemaking). The rulemaking docket for that rule (Docket No. A–96–56), hereafter referred to as the NO_X SIP call, contains information and analyses that are relied upon in the section 126 NPR and today's supplemental proposal on the Maine and New Hampshire petitions. Documents II–L–01 and II–L–02 in the docket for today's action describe which documents in the NO_X SIP call docket are included by reference. Documents related to the NO_X SIP call rulemaking are available for inspection in docket number A–96–56 at the address and times given above. In addition, the proposed NO_X SIP call and associated documents are located at http://www.epa.gov/ttn/oarpg/otagsip.html. Modeling and air quality assessment information can be obtained in electronic form at http://www.epa.gov.scram001/regmodcenter/t28.htm. Information related to the budget development can be found at http://www.epa.gov/capi.

Additional information relevant to this SNPR concerning the Ozone Transport Assessment Group (OTAG) is available on the web at http://www.epa.gov/ttn/. If assistance is needed in accessing the system, call the help desk at (919) 541–5384 in Research Triangle Park, NC. Documents related to OTAG can be downloaded directly from OTAG's webpage at http://www.epa.gov/ttn/otag. The OTAG's technical data are located at http://www.iceis.mcnc.org/OTAGDC.

Outline

I. Background
A. Summary of Petitions
B. Rulemaking Schedule
II. Proposed Action on the 8-Hour Petitions
A. Technical Determinations
B. Action on Whether to Grant or Deny the 8-Hour Petitions
1. Portion of the Petitions for Which EPA is Proposing an Affirmative Technical Determination
2. Portion of the Petitions for Which EPA is Proposing a Denial
C. Requirements for Sources for Which EPA Makes a Section 126(b) Finding
III. Corrections and Clarifications to October 21, 1998 NPR
IV. Notice of Availability of Additional Technical Documents
V. Administrative Requirements
A. Executive Order 12866: Regulatory Impact Analysis
B. Impact on Small Entities
C. Unfunded Mandates Reform Act
D. Paperwork Reduction Act
E. Executive Order 13045: Protection of Children from Environmental Health Risks and Safety Risks
F. Executive Order 12898: Environmental Justice
G. Executive Order 12875: Enhancing the Intergovernmental Partnership
H. Executive Order 13084: Consultation and Coordination with Indian Tribal Governments
I. National Technology Transfer and Advancement Act

I. Background

A. Summary of Petitions

In August 1997, New Hampshire, Maine, and six other Northeastern States filed petitions under section 126 seeking to mitigate what they described as significant transport of one of the main precursors of ground-level ozone, NO_X, across State boundaries. All of the petitioning States directed their petitions at the 1-hour ozone standard. Three of the States, Massachusetts, Pennsylvania, and Vermont, also directed their petitions at the new 8-hour ozone standard. In notices dated September 30, 1998 (63 FR 52213) and October 21, 1998 (63 FR 56292), EPA proposed action on the petitions. The October 21, 1998 NPR contains the longer, more detailed version of the proposal. Familiarity with that notice is assumed for purposes of today's SNPR. In the NPR, EPA proposed action under the 1-hour and/or the 8-hour standard as specifically requested in each State's petition. At that time, the Maine and New Hampshire petitions were only directed at the 1-hour standard. Therefore, EPA believed the Agency was not authorized to evaluate impacts of the emissions of the named upwind sources on 8-hour nonattainment problems in Maine and New Hampshire.

Maine 8-Hour Petition

On November 30, 1998, Maine requested that EPA make findings of significant contribution under the 8-hour standard based on information in its 1997 section 126 petition. Maine did not request any other changes to its original petition. Therefore, the geographic scope of the petition and the named sources and source categories to be considered are the same for the 8-hour standard as the 1-hour standard.

The Maine petition identifies ''electric utilities and steam-generating units having a heat input capacity of 250 mmBtu/hr or greater'' that are located within 600 miles of Maine's ozone nonattainment areas as significantly contributing to nonattainment and maintenance problems in Maine. The geographic area covered by the Maine petition includes all or parts of Connecticut, Delaware, District of Columbia, Maryland, Massachusetts, New Jersey, New York, New Hampshire, North Carolina, Ohio, Pennsylvania, Rhode Island, Vermont, Virginia, and West Virginia.

The Maine petition requests that EPA establish an emissions limitation of 0.15 lb/mmBtu for electric utilities and establish the Ozone Transport Commission Memorandum of Understanding's (on NO_X reductions) level of control for steam generating units, in a multistate cap-and-trade NO_X market system.

New Hampshire Petition

On November 30, 1998, New Hampshire submitted a request that EPA make findings of significant contribution with respect to the 8-hour ozone standard based on information in its 1997 petition. New Hampshire did not request any other changes in its original petition. Therefore, the geographic scope of the petition and the named sources and source categories to be considered are the same for the 8-hour standard as the 1-hour standard.

The New Hampshire section 126 petition identified ''fossil fuel-fired indirect heat exchange combustion units and fossil fuel-fired electric generating facilities which emit ten tons of NO_X or more per day'' that are located in the Ozone Transport Region (OTR) States and OTAG Subregions 1–7 as significantly contributing to nonattainment in, or interfering with maintenance by, New Hampshire. The geographic area covered includes all or parts of Connecticut, Delaware, District of Columbia, Illinois, Indiana, Iowa, Kentucky, Maine, Massachusetts, Maryland, Michigan, Missouri, New Jersey, New York, North Carolina, Ohio, Pennsylvania, Rhode Island, Tennessee, Vermont, Virginia, West Virginia, and Wisconsin.

The New Hampshire petition requests that EPA establish compliance schedules and emissions limitations no less stringent than: (1) Phase III of the Ozone Transport Commission Memorandum of Understanding on NO_X reductions; and/or (2) 85 percent reductions from the projected 2007 baseline; and/or (3) an emission rate of 0.15 lb/mmBtu.

B. Rulemaking Schedule

Section 126(b) generally requires EPA to make the requested finding or deny the petition within 60 days of receipt. It also requires EPA to provide the opportunity for a public hearing for the petition. In addition, EPA's action under section 126 is subject to the procedural requirements of section 307(d) of the CAA. One of these requirements is notice-and-comment rulemaking and

providing an opportunity for public hearing.

As discussed in Section I.E. of the NPR, on February 25, 1998, the eight petitioning States filed a complaint in the U.S. District Court for the Southern District of New York to compel EPA to take action on the States' section 126 petitions that were submitted in August 1997 (*State of Connecticut* v. *Browner*, No. 98–1376). The EPA and the eight States filed a proposed consent decree to establish the rulemaking schedule. The court accepted a modified version of the consent decree on October 26, 1998.

The schedule in the consent decree requires EPA to take final action on at least the technical merits of the August 1997 petitions by April 30, 1999. The consent decree further permits EPA to structure the final action it would take by April 30, 1999 so as to defer the granting or denial of the petitions to certain later dates extending to as late as May 1, 2000, pending certain actions by EPA and the States in response to the NO_X SIP call. In the NPR, EPA proposed to take this form of alternative final action.

The consent decree does not apply to the later November 30, 1998 8-hour petitions. However, for the sake of efficiency and certainty, EPA intends to take final action on these new petitions along with the final action on the rest of the petitions. Further, EPA is proposing to structure the final action on the Maine and New Hampshire 8-hour petitions according to the same terms and schedule as was proposed for the other petitions (see Section II.A.2.c and II.F.2 of the NPR).

II. Proposed Action on the 8-Hour Petitions

In evaluating the Maine and New Hampshire petitions under the 8-hour standard, EPA is applying the analytical approach proposed in the section 126 NPR as the applicable test under section 126 (see Section II of the NPR). The approach relies on conclusions drawn in the final NO_X SIP call.

The EPA's proposed action consists of three components: (1) technical determinations of whether upwind sources or source categories named in the petitions significantly contribute to nonattainment or interfere with maintenance of the 8-hour ozone standard in the relevant petitioning State; (2) for those sources for which EPA is proposing an affirmative technical determination, action specifying when a finding that such sources emit or would emit in violation of the section 110(a)(2)(D)(i)(I) prohibition will be deemed made or not made (or made but subsequently withdrawn) and, thus, when a petition will be deemed granted or denied (or granted but subsequently denied) for purposes of section 126(b); and (3) the specific emissions-reduction requirements that will apply when such a finding is deemed made. Each of these proposed actions is described below.

A. Technical Determinations

Using the NPR approach for making determinations on the technical merits of the petitions, EPA first looked to see which States named in the petitions contribute significantly to 8-hour nonattainment or maintenance problems in the petitioning State. These linkages were established in the NO_X SIP call and are summarized in Table 1 below.

TABLE 1.—NAMED UPWIND STATES WHICH CONTAIN SOURCES THAT SIGNIFICANTLY CONTRIBUTE TO 8-HOUR NONATTAINMENT IN PETITIONING STATE

Petitioning state	Named upwind states that significantly contribute
Maine	CT, DE, DC, MD, MA, NJ, NY, NC, PA, RI, VA
New Hampshire.	CT, DE, DC, MD, MA, NJ, NY, OH PA, RI

In the next step, EPA determined which of the named major stationary NO_X sources or source categories in the linked States may emit in violation of the prohibition in section 110(a)(2)(D)(i) because they emit in amounts that contribute significantly to nonattainment in, or interfere with maintenance by, the petitioning State. For this, EPA proposed in the NPR to use its analysis of highly cost-effective measures from the NO_X SIP call. Thus, if EPA identified highly cost-effective measures for a particular source category in the NO_X SIP call, then EPA proposed to make an affirmative ''technical determination'' for that category. The highly cost-effective control measures are discussed in Section II.C of the NPR and are summarized in Table 2 below.

TABLE 2.—SUMMARY OF FEASIBLE, HIGHLY COST-EFFECTIVE NO_x Control Measures

Subcategory	Control measures
Large EGUs[a]	State-by-State ozone season emissions level (in tons) based on applying a NO_x emission rate of 0.15 lb/mmBtu on all applicable sources
Large Non-EGUs[a]	State-by-State ozone season emissions level (in tons) based on applying a 60 percent reduction from uncontrolled emissions on all applicable sources
Large Process Heaters	No additional controls highly cost effective
Small Sources	No additional controls highly cost effective

[a] The definitions of ''large EGUs'' and ''large non-EGUs'' for purposes of this rulemaking are given in the applicability section of the proposed part 97 regulation in the NPR and clarified in a December 24, 1998 FEDERAL REGISTER notice (63 FR 71220), and a January 13, 1999 FEDERAL REGISTER notice (64 FR 2418).

In short, EPA is proposing today to make affirmative technical determinations of significant contribution (or interference) for those large electricity generating units (EGUs) and non-EGUs for which highly cost-effective controls are available (as shown in Table 2), to the extent those sources are located in one of the linked States named in the relevant petition (as shown in Table 1).

For all named sources that are located in States that are not linked to New Hampshire or Maine and for sources that are located in linked States but for which highly cost- effective controls are not available, EPA is proposing to deny the petitions. For States not linked to New Hampshire or Maine, EPA's basis for this denial is (i) for certain States, based on a proposed negative technical determination because EPA determined in the NO_x SIP call that the States are not linked to New Hampshire or Maine; and (ii) for other States, based on EPA's inability to make an affirmative technical determination due to inadequate information.

More specifically, in addition to those listed in Table 1 above (and those noted below), the New Hampshire 8-hour petition identifies all or parts of the following States: Illinois, Indiana, Kentucky, Michigan, Missouri, North

Carolina, Tennessee, West Virginia, and Wisconsin. The EPA is proposing a negative technical determination with respect to sources in these States for the New Hampshire 8-hour petition because in the NO_x SIP call, EPA determined that these States should not be linked to New Hampshire. Therefore, EPA is proposing to deny this part of the New Hampshire petition.

Similarly, in addition to those listed in Table 1 above (and those noted below), the Maine 8-hour petition identifies all or parts of the following States: Ohio and West Virginia. The EPA is proposing a negative technical determination with respect to sources in these States for the Maine 8-hour petition because in the NO_x SIP call, EPA determined that these States should not be linked to Maine. Therefore, EPA is proposing to deny this part of the Maine petition.

The New Hampshire 8-hour petition also identifies all or parts of the following States, in addition to those noted above: Iowa, Maine, and Vermont. The Maine 8-hour petition also identifies all or parts of the following States, in addition to those noted above: New Hampshire and Vermont. In the NO_x SIP call rule, EPA stated that it did not have adequate modeling information to make a final determination as to whether these States met the ''significant contribution'' standard under section 110(a)(2)(D) (63 FR 57398, October 27, 1998). In the section 126 NPR, EPA indicated that it intended to conduct further modeling for New Hampshire, Vermont, and Maine prior to taking final action on the section 126 rule (63 FR 56304, 56308, October 21, 1998). As discussed below, EPA is in the process of informing Iowa, Maine, New Hampshire, and Vermont (among others) that the Agency does not intend to do additional modeling prior to completion of this rulemaking by the required date of April 30, 1999. Accordingly, for the present, EPA is obliged to deny, on grounds of inadequate information, the portions of the New Hampshire and Maine section 126 petitions that request an affirmative finding for those four States.

The regulatory text accompanying today's SNPR sets forth each of the proposed findings and affirmative technical determinations for sources named in the Maine and New Hampshire 8-hour petitions.

All the source categories in named States for which EPA is proposing an affirmative technical determination in today's SNPR have already received a proposed affirmative technical determination of significant contribution in the section 126 NPR with respect to the New Hampshire and Maine 1-hour petitions and/or one or more of the other petitions. Appendix A to proposed part 97 in the October 21, 1998 NPR lists all existing sources for which EPA proposed to make an affirmative technical determination with respect to at least one petitioning State.

B. Action on Whether to Grant or Deny the 8-Hour Petitions

1. Portion of the Petitions for Which EPA Is Proposing an Affirmative Technical Determination

For the portions of the Maine and New Hampshire petitions for which EPA is proposing an affirmative technical determination, EPA proposes to issue the type of final action described in Section II.A.2.c. of the NPR for the reasons given in that section. Under that approach, the portions of the petitions for which EPA makes an affirmative technical determination would be granted or denied at certain later dates pending certain actions by the States and EPA regarding State submittals in response to the final NO_x SIP call. The schedule allows States the opportunity to develop and submit plans to reduce NO_x transport before EPA would make any final findings under section 126. The schedule and conditions under which the applicable final findings on the petitions would be triggered are discussed in Section II.F.2 of the NPR.

2. Portion of the Petitions for Which EPA Is Proposing a Denial

Consistent with the overall approach, EPA is proposing that the sources for which EPA makes a negative technical determination (as described above) do not or would not emit in violation of the section 110(a)(2)(D)(i)(I) prohibition. As a result, EPA proposes to deny the portions of the Maine and New Hampshire petitions relating to such sources. In addition, EPA is proposing to deny the portions of the Maine petition relating to sources located in New Hampshire and Vermont, as well as the New Hampshire petition relating to sources located in Iowa, Maine, and Vermont, due to the insufficiency of the data as to whether emissions from such sources emit in violation of the section 110(a)(2)(D)(i)(I) prohibition.

C. Requirements for Sources for Which EPA Makes a Section 126(b) Finding

In the NPR, EPA proposed the requirements that would apply to any new or existing major source or group of stationary sources for which a section 126(b) finding is ultimately made. The emissions control program is discussed in detail in Section III of the NPR and was proposed as a new part 97 in title 40 of the Code of Federal Regulations.

III. Corrections and Clarifications to October 21, 1998 NPR

Clarification to List of States Whose Sources Do Not Make a Significant Contribution to Nonattainment in, or Interfere with Maintenance by, the Petitioning States

In the NPR (63 FR 56303-04), EPA identified 11 States as containing sources that do not make a significant contribution to nonattainment in, or interfere with maintenance by, any of the petitioning States under the 1- hour and/or the 8-hour ozone standards. The EPA listed these States as Arkansas, Georgia, Iowa, Louisiana, Maine, Minnesota, Mississippi, New Hampshire, South Carolina, Wisconsin, and Vermont. The EPA added that it does not have the same information available for the States of Maine, New Hampshire, and Vermont; that EPA intended to conduct further analysis with respect to those States; and that if such further analyses indicated that sources in any of those States contributed significantly to a relevant petitioning State, EPA would issue a supplemental notice of proposed rulemaking based on the new information (63 FR 56304, 56308).

These statements are clarified as follows: Based on determinations made in the NO_x SIP call, the States of Georgia, South Carolina, and Wisconsin should be treated as containing sources that do not make a significant contribution to nonattainment in, or interfere with maintenance by, any of the petitioning States under the 1- hour and/or 8-hour ozone standards. As further indicated in the NO_x SIP call, for the remaining eight States of Arkansas, Iowa, Louisiana, Maine, Minnesota, Mississippi, New Hampshire, and Vermont, EPA does not, at this time, have sufficient information—that is, adequate air quality modeling studies—to make a determination as to whether or not those States make a significant contribution to, or interfere with maintenance by, any of the petitioning States under the two ozone standards. Moreover, EPA is in the process of informing those eight States (along with other States in the midwest and south), that EPA does not expect to conduct those modeling studies prior to taking final action on the petitions by April 30, 1999. Accordingly, the NPR is clarified to propose a denial for the portions of the section 126 petitions under either ozone standard that pertain to those eight States on grounds of inadequate

information to demonstrate whether or not sources in those States do contribute significantly to, or interfere with maintenance by, any of the petitioning States.

Correction to Table II–1 of the NPR [1]

When EPA published Table II–1 in the NPR, EPA inadvertently left off Ohio as being a significant contributor to New Hampshire under the 1-hour standard. In addition, asterisks were inadvertently left off of Michigan and North Carolina where the States were listed as significant contributors to Connecticut. These errors are corrected in the version of the table shown below.

TABLE II–1.—[FROM THE NPR]. NAMED UPWIND STATES WHICH CONTAIN SOURCES THAT CONTRIBUTE SIGNIFICANTLY TO 1-HR NONATTAINMENT IN PETITIONING STATES.

Petitioning State (Nonattainment Area)	Named Upwind States
New York	DE, DC, IN, KY, MD, MI, NC, NJ, OH, PA, VA, WV
Connecticut	DE, DC, IN*, KY*, MD, MI*, NC*, NJ, NY, OH, PA, VA, WV
Pennsylvania	NC, OH, VA, WV
Massachusetts	OH, WV
Rhode Island	OH, WV
Maine	CT, DE, DC, MD, MA, NJ, NY, PA, RI
New Hampshire.	CT, DE*, DC*, MA, MD*, NJ, NY, OH*, PA, RI, VA*
Vermont	None
Total	CT, DE, DC, IN, KY, MA, MD, MI, NC, NJ, NY, OH, PA, RI, VA, WV

*Upwind States marked with an asterisk are included in the table because they contribute to an interstate nonattainment area that includes part of the petitioning State. Part of New Hampshire is included in the Boston/Portsmouth nonattainment area; part of Connecticut is included in the New York City nonattainment area.

Correction to Part 52 Regulatory Text [2]

The Part 52 regulatory text in the NPR is corrected to list Ohio as a significant contributor to New Hampshire under the 1-hour standard.

Additional Notice to Reopen Comment Period

The EPA is publishing, in the **Federal Register,** a separate notice to reopen the comment period on the NPR to allow comment concerning the effect of EPA's proposed determinations that the 1-hour ozone standard no longer applies to certain areas in States that have submitted section 126 petitions (63 FR 69598, December 17, 1998). If EPA finalizes these determinations, EPA may then deny at least portions of the section 126 petitions of those States. Under these circumstances, EPA would revise Table II–1, above, and the accompanying regulatory text, accordingly.

Drafting Revisions to Proposed Part 52 Regulatory Text

The proposed part 52 regulatory text language that EPA included in the NPR contained provisions identifying EPA's proposed determinations for both affirmative technical determinations and negative technical determinations (63 FR 56327–32, October 21, 1998). Upon further consideration, EPA believes that, purely as a matter of drafting, it is not necessary to include regulatory text identifying negative technical determinations or denials. The regulatory text is revised accordingly.

IV. Notice of Availability of Additional Technical Documents

In the section 126 NPR, EPA stated that all documents in the docket for the NO_x SIP call (Docket No. A–96–56) should be considered as part of the docket for the section 126 rulemaking (Docket No. A–97–43). The EPA has recently included in the NO_x SIP call docket various technical documents, including air quality and economic modeling analyses, that had been inadvertently omitted from that docket. These documents may be found in Sections VI–D and VI–F of the NO_x SIP call docket. A list of the documents is attached as Appendix A to this notice. These documents have been incorporated by reference into the docket for the section 126 rulemaking.

V. Administrative Requirements

A. Executive Order 12866: Regulatory Impact Analysis

Under Executive Order 12866 (58 FR 51735, October 4, 1993), the Agency must determine whether a regulatory action is ''significant'' and therefore subject to Office of Management and Budget (OMB) review and the requirements of the Executive Order. The Order defines ''significant regulatory action'' as one that is likely to result in a rule that may:

(1) Have an annual effect on the economy of $100 million or more or adversely affect in a material way the economy, a sector of the economy, productivity, competition, jobs, the environment, public health or safety, or State, local, or tribal governments or communities;

(2) Create a serious inconsistency or otherwise interfere with an action taken or planned by another agency;

(3) Materially alter the budgetary impact of entitlements, grants, user fees, or loan programs or the rights and obligations of recipients thereof; or

(4) Raise novel legal or policy issues arising out of legal mandates, the President's priorities, or the principles set forth in the Executive Order.

The EPA considers today's SNPR to be one piece of its overall proposal on the eight section 126 petitions. As discussed in the October 21, 1998 NPR, the EPA believes that its action on the section 126 petitions is a ''significant regulatory action'' because it raises novel legal and policy issues arising from the Agency's obligation to respond to the petitions, and because the action could have an annual effect on the economy of more than $100 million. As a result, the NPR was submitted to OMB for review, and EPA prepared a regulatory impact analysis (RIA) titled ''Regulatory Impact Analysis for the NO_x SIP Call, FIP, and Section 126 Petitions.'' This RIA assesses the costs, benefits, and economic impacts associated with federally-imposed requirements to mitigate NO_x emissions from sources contributing to downwind nonattainment of the ozone national ambient air quality standards. Any written comments from OMB to EPA and any written EPA response to those comments are included in the docket. The docket is available for public inspection at the EPA's Air Docket Section, which is listed in the **ADDRESSES** section of this preamble. The RIA is available in hard copy by contacting the EPA Library at the address under ''Availability of Related Information'' and in electronic form as discussed above in that same section. All of the sources covered under the Maine and New Hampshire petitions with respect to the 8-hour standard are also covered with respect to the Maine and New Hampshire 1-hour petitions and/or one or more of the other petitions and, therefore, were considered in the RIA analyses for the NPR. This SNPR does not create any additional impacts beyond what were proposed in the NPR, therefore, no additional RIA is needed.

B. Impact on Small Entities

The Regulatory Flexibility Act (RFA), as amended by the Small Business Regulatory Enforcement Fairness Act (SBREFA), provides that whenever an agency is required to publish a general notice of proposed rulemaking, it must

[1] *See* discussion below, in ''Additional Notice to Reopen Comment Period.''

[2] *See* discussion immediately below, in ''Additional Notice to Reopen Comment Period.''

prepare and make available an initial regulatory flexibility analysis, unless it certifies that the proposed rule, if promulgated, will not have ''a significant economic impact on a substantial number of small entities.''

In the process of developing the NPR, EPA worked with the Small Business Administration (SBA) and OMB and obtained input from small businesses, small governmental jurisdictions, and small organizations. On June 23, 1998, EPA's Small Business Advocacy Chairperson convened a Small Business Advocacy Review Panel under section 609(b) of the RFA as amended by SBREFA. In addition to its chairperson, the panel consists of EPA's Director of the Office of Air Quality Planning and Standards within the Office of Air and Radiation, the Administrator of the Office of Information and Regulatory Affairs within OMB, and the Chief Counsel for Advocacy of the SBA.

As described in the NPR, this panel conducted an outreach effort and completed a report on the section 126 proposal. The report provides background information on the proposed rule being developed and the types of small entities that would be subject to the proposed rule, describes efforts to obtain the advice and recommendations of representatives of those small entities, summarizes the comments that have been received to date from those representatives, and presents the findings and recommendations of the panel. The completed report, comments of the small entity representatives, and other information are contained in the docket for this rulemaking.

It is important to note that the panel's findings and discussion are based on the information available at the time this report was drafted. The EPA is continuing to conduct analyses relevant to the proposed rule, and additional information may be developed or obtained during the remainder of the rule development process. This SNPR does not affect any additional sources or source categories beyond those that are affected by the NPR. All of the sources covered by this SNPR are already being considered in the SBREFA process that was initiated for the NPR and, therefore, no separate SBREFA analysis is needed for today's SNPR.

C. Unfunded Mandates Reform Act

Title II of the Unfunded Mandates Reform Act of 1995 (UMRA), Pub.L. 104–4, establishes requirements for Federal agencies to assess the effects of their regulatory actions on State, local, and tribal governments and the private sector. Under section 202 of the UMRA, 2 U.S.C. 1532, EPA generally must prepare a written statement, including a cost-benefit analysis, for any proposed or final rule that ''includes any Federal mandate that may result in the expenditure by State, local, and tribal governments, in the aggregate, or by the private sector, of $100,000,000 or more * * * in any one year.'' A ''Federal mandate'' is defined under section 421(6), 2 U.S.C. 658(6), to include a ''Federal intergovernmental mandate'' and a ''Federal private sector mandate.'' A ''Federal intergovernmental mandate,'' in turn, is defined to include a regulation that ''would impose an enforceable duty upon State, local, or tribal governments,'' section 421(5)(A)(i), 2 U.S.C. 658(5)(A)(i), except for, among other things, a duty that is ''a condition of Federal assistance,'' section 421(5)(A)(i)(I). A ''Federal private sector mandate'' includes a regulation that ''would impose an enforceable duty upon the private sector,'' with certain exceptions, section 421(7)(A), 2 U.S.C. 658(7)(A).

As discussed in the NPR, the EPA is taking the position that the requirements of UMRA apply because EPA's action on the section 126 petitions could result in the establishment of enforceable mandates directly applicable to sources (including sources owned by State and local governments) that would result in costs greater than $100 million in any 1 year. The UMRA generally requires EPA to identify and consider a reasonable number of regulatory alternatives and adopt the least-costly, most cost-effective or least-burdensome alternative that achieves the objectives of the rule. The EPA's UMRA analysis, ''Unfunded Mandates Reform Act Analysis For the Proposed Section 126 Petitions Under the Clean Air Act Amendments Title I,'' is contained in the docket for this action and is summarized in the NPR. Because this SNPR does not create any additional mandates beyond what were proposed in the NPR, no additional UMRA analysis is needed for today's SNPR.

D. Paperwork Reduction Act

The control requirements that would apply to any sources for which a final section 126 finding is made were proposed in the October 21, 1998 NPR. This SNPR does not propose any additional control requirements. The information collection requirements related to the NPR control measures were submitted for approval to the OMB under the Paperwork Reduction Act, 44 U.S.C. 3501 *et seq.* An Information Collection Request (ICR) document has been prepared by EPA (ICR No. 1889.01), and a copy may be obtained from Sandy Farmer, OPPE Regulatory Information Division, US Environmental Protection Agency (2137), 401 M St., SW, Washington, DC 20460 or by calling (202) 260–2740. See Section V.D. of the NPR for a discussion of the ICR document.

E. Executive Order 13045: Protection of Children from Environmental Health Risks and Safety Risks

Executive Order 13045 applies to any rule that EPA determines (1) ''economically significant'' as defined under Executive Order 12866, and (2) the environmental health or safety risk addressed by the rule has a disproportionate effect on children. If the regulatory action meets both criteria, the Agency must evaluate the environmental health or safety effects of the planned rule on children; and explain why the planned regulation is preferable to other potentially effective and reasonably feasible alternatives considered by the Agency. This proposed rule is not subject to Executive Order 13045, entitled ''Protection of Children from Environmental Health Risks and Safety Risks'' (62 FR 19885, April 23, 1997), because it does not involve decisions on environmental health risks or safety risks that may disproportionately affect children.

In accordance with section 5(501), the Agency has evaluated the environmental health or safety effects of the rule on children and found that the rule does not separately address any age groups. However, in conjunction with the final NO_x SIP call rulemaking, the Agency has conducted a general analysis of the potential changes in ozone and PM levels experienced by children as a result of the NO_x SIP call; these findings are presented in the RIA. The findings include population-weighted exposure characterizations for projected 2007 ozone and PM concentrations. The population data includes a census-derived subdivision for the under 18 group. This analysis generally applies to the section 126 proposal because the section 126 action is a subset of the NO_x SIP call.

F. Executive Order 12898: Environmental Justice

Executive Order 12898 requires that each Federal agency make achieving environmental justice part of its mission by identifying and addressing, as appropriate, disproportionately high and adverse human health or environmental effects of its programs, policies, and activities on minorities and low-income populations. In conjunction with the final NO_x SIP call

rulemaking, the Agency has conducted a general analysis of the potential changes in ozone and PM levels that may be experienced by minority and low-income populations as a result of the NO_x SIP call; these findings are presented in the RIA. The findings include population-weighted exposure characterizations for projected ozone concentrations and PM concentrations. The population data includes census-derived subdivisions for whites and non-whites, and for low-income groups. These findings generally apply to the section 126 proposal because the section 126 action is a subset of the NO_x SIP call.

G. Executive Order 12875: Enhancing the Intergovernmental Partnership

Under Executive Order 12875, EPA may not issue a regulation that is not required by statute and that creates a mandate upon a State, local or tribal government, unless the Federal government provides the funds necessary to pay the direct compliance costs incurred by those governments, or EPA consults with those governments. If the mandate is unfunded, EPA must provide OMB a description of the extent of EPA's prior consultation with representatives of affected State, local and tribal governments, the nature of their concerns, copies of any written communications from the governments, and a statement supporting the need to issue the regulation. In addition, Executive Order 12875 requires EPA to develop an effective process permitting elected officials and other representatives of State, local and tribal governments ''to provide meaningful and timely input in the development of regulatory proposals containing significant unfunded mandates.''

The EPA has concluded that the rulemaking on the eight section 126 petitions may create a mandate on State and local governments, and that the Federal government will not provide the funds necessary to pay the direct costs incurred by the State and local governments in complying with the mandate. In order to provide meaningful and timely input in the development of this regulatory action, EPA sent letters to five national associations whose members include elected officials. The letters provided background information, requested the associations to notify their membership of the proposed rulemaking, and encouraged interested parties to comment on the proposed actions by sending comments during the public comment period and presenting testimony at the public hearing on the proposal. Any comments will be taken into consideration as the action moves toward final rulemaking.

Furthermore, for the section 126 rulemaking, EPA published an Advance Notice of Proposed Rulemaking that served to provide notice of the Agency's intention to propose emissions limits and to solicit early input on the proposal. This process helped to ensure that small governments had an opportunity to give timely input and obtain information on compliance.

This SNPR does not affect any additional sources or source categories beyond those that are affected by the NPR. Therefore, all of the sources covered by this SNPR were already considered in the consultation process with State, local, and tribal governments that was conducted for the NPR, and no separate consultation process is needed for today's SNPR.

H. Executive Order 13084: Consultation and Coordination with Indian Tribal Governments

Under Executive Order 13084, EPA may not issue a regulation that is not required by statute, that significantly or uniquely affects the communities of Indian tribal governments, and that imposes substantial direct compliance costs on those communities, unless the government provides the funds necessary to pay the direct compliance costs incurred by the tribal governments. If the mandate is unfunded, EPA must provide to OMB, in a separately identified section of the preamble to the rule, a description of the extent of EPA's prior consultation with representatives of affected tribal governments, a summary of the nature of their concerns, and a statement supporting the need to issue the regulation. In addition, Executive Order 13084 requires EPA to develop an effective process permitting elected and other representatives of Indian tribal governments ''to provide meaningful and timely input in the development of regulatory policies on matters that significantly or uniquely affect their communities.''

Today's SNPR does not significantly or uniquely affect the communities of Indian tribal governments and, in any event, will not impose substantial direct compliance costs on such communities. The EPA is not aware of sources located on tribal lands that could be subject to the requirements EPA is proposing in this notice. Accordingly, the requirements of section 3(b) of Executive Order 13084 do not apply.

I. National Technology Transfer and Advancement Act

Section 12(d) of the National Technology Transfer and Advancement Act of 1995 (NTTAA), Pub L. No. 104–113, directs EPA to use voluntary consensus standards in its regulatory activities unless to do so would be inconsistent with applicable law or otherwise impractical. Voluntary consensus standards are technical standards (e.g., materials specifications, test methods, sampling procedures, and business practices) that are developed or adopted by voluntary consensus standards bodies. The NTTAA directs EPA to provide Congress, through OMB, explanations when the Agency decides not to use available and applicable voluntary consensus standards.

The control requirements that would apply to any sources for which a final section 126 finding is made with respect to today's action were proposed in the October 21, 1998 NPR. This SNPR does not propose any additional control requirements. As discussed in Section V.I of the NPR, the control requirements incorporate a number of voluntary consensus standards.

List of Subjects in 40 CFR Part 52

Environmental protection, Air pollution control, Emissions trading, Nitrogen oxides, Ozone transport, Reporting and recordkeeping requirements.

Dated: February 25, 1999.

Carol M. Browner,

Administrator.

Appendix A to the Preamble—Availability of Additional Technical Documents

The following tables list the documents that have recently been placed in Sections VI–D and VI–F of the NO_X SIP call docket (Docket No. A–96–56).

TABLE A–1.—ADDITIONS TO SECTION VI–D OF DOCKET NO. A–96–56

Document Number	Commenter, Addressee, Title or Description
VI–D–05	Draft—Summary of Revised 2007 Base and Budget Seasonal NO_X Emissions
VI–D–06	Technical Support Document on Development of Modeling Inventory and Budgets for the Ozone Transport SIP Call

TABLE A–1.—ADDITIONS TO SECTION VI–D OF DOCKET NO. A–96–56—Continued

Document Number	Commenter, Addressee, Title or Description
VI–D–07	Draft Appendices for Revised Budget Calculations for Electric Generation Sources
VI–D–08	Explanation of Revised Budget Calculations
VI–D–09	Draft Appendices for Revised Budget Calculations for Non-Electric Generation Point Sources
VI–D–10	Revised Draft Utilization Information for Electricity Generators Used in Budget Calculations for the Proposed SIP Call
VI–D–11	Road Map to IPM Run Files for the Proposed Ozone Transport Rulemaking
VI–D–12	Data Used to Determine State-Specific Electricity Generator Growth Used in the Ozone Transport Rulemaking
VI–D–13	Summary of State-Specific 1996–2007 Growth Factors for Electricity Generating Units in the SIP Call Region
VI–D–14	Segments of five IPM runs used to prepare the electric power industry emissions reduction and cost analysis in the Supplemental Ozone Transport Rulemaking Regulatory Analysis
VI–D–15	Estimates of Annual Incremental Costs of Combustion Control on Coal-Fired Units that are Part of EPA's Estimates of Compliance Costs for the SNPR
VI–D–16	Initial Base Case—Winter 1998 Electricity Demand Forecast, SIPJ
VI–D–17	0.15 Trading—Winter 1998 Electricity Demand Forecast, SIP2
VI–D–18	Final Base Case—Winter 1998 Electricity Demand Forecast, SIP5—2
VI–D–19	Initial Base Case—Summer 1996 Electricity Demand Forecast, SIP3
VI–D–20	0.15 Trading—Summer 1996 Electricity Demand Forecast, SIP14
VI–D–21	Incremental Cost Analyses
VI–D–22	Four additional sets of IPM run files which provide results of analysis of five cap-and-trade options
VI–D–23	EPA Utility/Non-Utility Zero-out Model Runs: emissions inputs and ozone predictions in electronic form and tabular summaries of ozone metrics in hard copy form
VI–D–24	EPA UAM–V Zero-out Model runs: emissions inputs and ozone predictions in electronic form
VI–D–25	EPA UAM–V Base Case and Strategy Model Runs: emissions inputs and ozone predictions in electronic form
VI–D–26	EPA CAM_X Base Case and Source Apportionment Model Runs: emissions inputs and ozone predictions in electronic form

TABLE A–2.—ADDITIONS TO SECTION VI–F OF DOCKET NO. A–96–56

Document Number	Commenter, Addressee, Title or Description
VI–F–01	0.12/0.15/0.20 3-zone trading beginning in 2003 (output from the IPM model)
VI–F–02	0.1 5/0.20 2-zone trading beginning in 2003 (output from the IPM model)
VI–F–03	Sensitivity Analysis of a 7-week outage period for SCR Hook-up (SIP 47)
VI–F–04	Sensitivity Analysis of a 9-week outage period for SCR Hook-up (SIP 48)
VI–F–05	Final .15 with interstate trading beginning in 2003 (SIP 80)
VI–F–06	Corrected .15 with intrastate trading beginning in 2003 (SIP 83)

For the reasons set forth in the preamble, part 52 of chapter 1 of title 40 of the Code of Federal Regulations is proposed to be amended as follows:

PART 52—APPROVAL AND PROMULGATION OF IMPLEMENTATION PLANS

1. The authority citation for part 52 continues to read as follows:

Authority: 42 U.S.C. 7401–7671q.

Subpart A—General Provisions [Amended]

2. Section 52.34 as proposed at 63 FR 56292 on October 21, 1998, is amended by removing paragraphs (b)(3) and (4); by revising paragraphs (c)(3) and (4); by removing paragraphs (d)(3), (4), (7), and (8) and redesignating paragraphs (d)(5) and (6) as paragraphs (d)(3) and (4) respectively; by revising paragraphs (e)(3) and (4); by adding paragraph (e)(2)(xi); by removing paragraphs (f)(3) and (4); by removing paragraphs (g)(3), (4), (7), and (8) and redesignating paragraphs (g)(5) and (6) as paragraphs (g)(3) and (4) respectively; by removing paragraphs (h)(3) and (4); and by removing paragraphs (i)(3), (4), (7), and (8) and redesignating paragraphs (i)(5) and (6) as paragraphs (i)(3) and (4) respectively; to read as follows:

§ 52.34 Action on petitions submitted under section 126 relating to emissions of nitrogen oxides.

* * * * *

(c) * * *

(3) *Affirmative Technical Determinations with Respect to the 8-Hour Ozone Standard in Maine.* The Administrator of EPA finds that any existing or new major source or group of stationary sources emits or would emit NO_X in amounts that contribute significantly to nonattainment in the State of Maine, with respect to the 8-hour NAAQS for ozone if it is or will be:

(i) In a category of sources described in 40 CFR 97.4;

(ii) Located in one of the States (or portions thereof) listed in paragraph (c)(6) of this section; and

(iii) Within one of the ''Named Source Categories'' listed in the portion of Table F–1 of appendix F of this part describing the sources covered by the petition of the State of Maine.

(4) *States or Portions of States that Contain Sources for which EPA is Making an Affirmative Technical Determination with Respect to the 8-Hour Ozone Standard in Maine.* The States, or portions of States, that contain sources for which EPA is making an affirmative technical determination are:

(i) Connecticut.
(ii) Delaware.
(iii) District of Columbia.
(iv) Maryland.
(v) Massachusetts.
(vi) New Jersey.
(vii) New York.
(viii) North Carolina.
(ix) Pennsylvania.
(x) Rhode Island.
(xi) Virginia.

* * * * *

(e) * * *

(2) * * *

(xi) Ohio

* * * * *

(3) *Affirmative Technical Determinations with Respect to the 8-Hour Ozone Standard in New Hampshire.* The Administrator of EPA finds that any existing or new major source or group of stationary sources emits or would emit NO_X in amounts

that contribute significantly to nonattainment in, or interfere with maintenance by, the State of New Hampshire, with respect to the 8-hour NAAQS for ozone if it is or will be:

(i) In a category of sources described in 40 CFR 97.4;

(ii) Located in one of the States (or portions thereof) listed in paragraph (e)(6) of this section; and

(iii) Within one of the ''Named Source Categories'' listed in the portion of Table F–1 of appendix F of this part describing the sources covered by the petition of the State of New Hampshire.

(4) *States or Portions of States that Contain Sources for which EPA is Making an Affirmative Technical Determination with Respect to the 8-Hour Ozone Standard in New Hampshire.* The States, or portions of States, that contain sources for which EPA is making an affirmative technical determination are:

(i) Connecticut.
(ii) Delaware.
(iii) District of Columbia.
(iv) Maryland.
(v) Massachusetts.
(vi) New Jersey.
(vii) New York.
(viii) Pennsylvania.
(ix) Rhode Island.

* * * * *

[FR Doc. 99–5201 Filed 3–2–99; 8:45 am]

BILLING CODE 6560–50–P

federal register

Wednesday
March 3, 1999

Part III

Department of Education

Applications for New Awards for Fiscal Year 1999; Notice

DEPARTMENT OF EDUCATION

Applications for New Awards for Fiscal Year 1999: Special Education—Research and Innovation To Improve Services and Results for Children With Disabilities; and Special Education—Technical Assistance and Dissemination To Improve Services and Results for Children With Disabilities

ACTION: Notice inviting applications for new awards for fiscal year 1999.

SUMMARY: This notice provides closing dates and other information regarding the transmittal of applications for fiscal year 1999 competitions under two programs authorized by the Individuals with Disabilities Education Act (IDEA), as amended. The two programs are: (1) Special Education—Research and Innovation To Improve Services and Results for Children With Disabilities (five priorities); and (2) Special Education—Technical Assistance and Dissemination To Improve Services and Results for Children With Disabilities (two priorities).

This notice supports the National Education Goals by helping to improve results for children with disabilities.

Waiver of Rulemaking

It is generally the practice of the Secretary to offer interested parties the opportunity to comment on proposed priorities. However, section 661(e)(2) of IDEA makes the Administrative Procedure Act (5 U.S.C. 553) inapplicable to the priorities in this notice.

General Requirements

(a) Projects funded under this notice must make positive efforts to employ and advance in employment qualified individuals with disabilities in project activities (see section 606 of IDEA);

(b) Applicants and grant recipients funded under this notice must involve individuals with disabilities or parents of individuals with disabilities in planning, implementing, and evaluating the projects (see section 661(f)(1)(A) of IDEA);

(c) Projects funded under these priorities must budget for a two-day Project Directors' meeting in Washington, DC during each year of the project; and

(d) In a single application, an applicant must address only one absolute priority in this notice.

Note: The Department of Education is not bound by any estimates in this notice.

Information collection resulting from this notice has been submitted to OMB for review under the Paperwork Reduction Act and has been approved under control number 1820–0028, expiration date July 31, 2000.

Research and Innovation to Improve Services and Results for Children With Disabilities

Purpose of Program: To produce, and advance the use of, knowledge to: (1) Improve services provided under IDEA, including the practices of professionals and others involved in providing those services to children with disabilities; and (2) improve educational and early intervention results for infants, toddlers, and children with disabilities.

Applicable Regulations: (a) The Education Department General Administrative Regulations (EDGAR) in 34 CFR parts 74, 75, 77, 79, 80, 81, 82, 85, and 86; (b) The selection criteria for Absolute Priorities 1–5 are drawn from the EDGAR general selection criteria menu. The specific selection criteria for each priority are included in the funding application packet for the applicable competition.

Note: The regulations in 34 CFR part 86 apply to institutions of higher education only.

Eligible Applicants: State and local educational agencies, institutions of higher education, other public agencies, private nonprofit organizations, outlying areas, freely associated States, and Indian tribes or tribal organizations.

Priority

Under 34 CFR 75.105(c)(3), the Secretary gives an absolute preference to applications that meet the following priorities. The Secretary funds under these competitions only applications that meet these absolute priorities:

Absolute Priority 1—National Center on Access to the General Curriculum (84.324H)

Background

The 1997 reauthorization of the Individuals With Disabilities Education Act (IDEA) calls for providing the greatest possible access to the general curriculum as a means for improving educational results for students with disabilities. Access to the general curriculum is most readily available by providing services in the regular education classroom. Since the 1990–1991 school year, the percentage of students with disabilities (ages 6–21) who participate in regular education classes, at least 80 percent of the time, has gradually increased from 33 percent to 46 percent during the 1996–1997 school year. As regular classrooms become more inclusive, strategies for providing access to the general curriculum are needed so that students with disabilities are actively involved in and progress in the general curriculum within these classrooms. Furthermore, more students with disabilities need access to the general curriculum, regardless of their placement. However, a number of issues must be addressed before this goal can be achieved.

First, the research base is disorganized and incomplete regarding the best approaches for providing access to the general curriculum. We need to broaden our understanding of how curriculum must be designed, developed, and taught to be accessible. We need a better understanding of the development and application of multiple alternatives that reduce barriers to learning, such as universal designs that allow for diverse learning needs. Second, the general curriculum tends to undergo recurrent analyses and changes that may affect accessibility for students with disabilities. We need to increase our awareness of the issues and policies, both State and local, that affect general curriculum. Third, special education and regular education communities have not developed a shared discourse and purpose concerning the general curriculum and students with disabilities. We need collaborative opportunities to define and develop a vision in public education where all students, including students with disabilities, actively engage in learning and progress in the general curriculum. Access to the general curriculum must not be viewed as exclusively a special education concern; it is dependent on factors associated with regular education and the general curriculum. Therefore, all students benefit when the general education curriculum becomes more accessible.

Priority

The Secretary establishes an absolute priority for a center to provide national leadership in improving results for students with disabilities through access to the general curriculum. The center will focus on three broad areas: (1) Multiple strategies for access to the general education curriculum and for achieving improved results; (2) State and local policy and other factors associated with access to the general curriculum and achieving improved results; and (3) national collaborative efforts for increasing access to the general curriculum. The center will address these three areas through research, national leadership, and dissemination. The center must apply rigorous, State-of-the-art techniques in

its research synthesis, dissemination, and communication, and leadership activities.

Research activities of the Center must include but are not limited to:

(a) Compiling and synthesizing relevant research findings that focus on preferred or promising practices that affect access to the general education curricula (e.g., universal design for learning, supplemental aids, supports, assistive technology, instructional methods, collaborative models of teaching); and

(b) Evaluating the current state of policy regarding access to the general education curriculum for students with disabilities. This evaluation study should include relevant and existing State and local policies; the linkages between standards, assessments, accessible curriculum, and results; and other educational reform initiatives that affect the general education curriculum.

National dissemination activities of the Center must include but are not limited to:

(a) Developing partnerships and communicating with leaders and key stakeholders in special education and regular education, other OSEP research institutes and centers, including the National Outcomes Center, policymakers, service providers, school-level administrators, and consumer and advocacy organizations such as the Independent Living Centers (ILC), Parent Training and Information Centers (PTI), and the Protection and Advocacy Organizations (P&A), to increase awareness of and use of research-based practices to maximize access to the general curriculum for students with disabilities and to achieve good results;

(b) Planning with regular and special education technical assistance providers to collaboratively develop communication and dissemination strategies, including strategies to communicate research findings and content specific knowledge, to distribute products, and to improve the availability of technical assistance on providing access to the general curriculum for students with disabilities and to achieve improved results;

(c) Developing information materials intended for all key stakeholders and designed to increase awareness of and use of research-based practices to maximize access to the general curriculum for students with disabilities and to achieve good results; and

(d) Implementing strategies in collaboration with technical assistance providers to communicate and to disseminate information and advocacy materials to leaders and key stakeholders in special education and general education.

Leadership activities of the Center must include but are not limited to:

(a) Forming one or more advisory group or groups of experts and leaders in special education, regular education curriculum, technical assistance related to technology, and other relevant fields;

(b) Conducting consensus building activities on providing access to the general education curriculum through relationships with ongoing school improvement and innovation efforts and organizations, including States and entities involved with the State Improvement Grants Program, major professional education associations such as the American Federation of Teachers (AFT) and the National Education Association (NEA), Parent Teacher Associations (PTA) and PTIs, institutions of higher education, and other relevant research, development and reform groups;

(c) Convening regional or national conferences of special educators and regular educators; and

(d) Funding, as project research assistants, at least three doctoral students per year, who have concentrations in special education. These students will assist with project facilitation, research, and dissemination, and communication activities.

The Center must also —

(a) Prepare research findings and products from the project in formats that are useful for specific audiences, including educators, school administrators, families, students, ILCs, State, and national policymakers (See section 661(f)(2)(B) of IDEA);

(b) Meet with the Office of Special Education Programs (OSEP) project officer in the first four months of the project to review the program of research and dissemination approaches;

(c) Budget three trips annually to Washington, DC (two trips to meet and collaborate with U.S. Department of Education officials and one trip, as specified in the general requirements for all projects, to attend the two-day Office of Special Education Programs Research Project Director's Conference).

Under this priority, the Secretary will make one award for a cooperative agreement with a project period of up to 60 months subject to the requirements of 34 CFR 75.253(a) for continuation awards. After the third year of the project, the Secretary will determine whether to continue the Center for the fourth and fifth years of the project period and will consider in addition to the requirements of 34 CFR 75.253(a):

(a) The timeliness and effectiveness with which all requirements of the negotiated cooperative agreement have been or are being met by the Center; and

(b) The degree to which the Center's design and methodology demonstrate the potential for advancing significant new knowledge.

Project Period: Up to 60 months.

Maximum Award: The Secretary rejects and does not consider an application that proposes a budget exceeding $500,000 for any single budget period of 12 months. The Secretary may change the maximum amount through a notice published in the **Federal Register**.

Page Limits: Part III of the application, the application narrative, is where an applicant addresses the selection criteria that are used by reviewers in evaluating an application. An applicant must limit Part III to the equivalent of no more than 70 double-spaced pages, using the following standards: (1) A ''page'' is 8½″ × 11″ (on one side only) with one-inch margins (top, bottom, and sides); (2) All text in the application narrative, including titles, headings, footnotes, quotations, references, and captions, as well as all text in charts, tables, figures, and graphs, must be double-spaced (no more than 3 lines per vertical inch). If using a proportional computer font, use no smaller than a 12-point font, and an average character density no greater than 18 characters per inch. If using a nonproportional font or a typewriter, do not use more than 12 characters to the inch.

The page limit does not apply to Part I—the cover sheet; Part II—the budget section (including the narrative budget justification); Part IV—the assurances and certifications; or the one-page abstract, resumes, bibliography, and letters of support. However, all of the application narrative must be included in Part III. If an application narrative uses a smaller print size, spacing, or margin that would make the narrative exceed the equivalent of the page limit, the application will not be considered for funding.

Absolute Priority 2—Center for Students With Disabilities Involved With and at Risk of Involvement With the Juvenile Justice System (84.324J)

Background

In general, special education services for students with disabilities have improved since the passage of Public Law 94–142 in 1975. However, progress has been limited for children with disabilities in the justice system. Although the estimates vary, most researchers agree that students with

disabilities are over-represented in the juvenile justice system. OSEP data for 1996 indicate that 15,930 students with disabilities were being served in correctional facilities. This count only includes those in correctional facilities, not the total number involved in the justice system. Of these 15,930 students, 45 percent are classified as having a learning disability and 42 percent are classified as emotionally disturbed. Theories regarding the disproportionate number of students in the juvenile justice system vary but their common characteristic is school failure. Over the past several years, the number of students with disabilities in correctional facilities has risen at over twice the rate of the increase of the overall special education population. From 1992–1993 to 1996–1997 the number of students ages 6–21 with disabilities increased 13 percent; the number in correctional facilities increased 28 percent. This increase is most apparent with juveniles with learning disabilities and emotional disturbance.

In order to meet the challenges of serving this population of students with disabilities, States need to make significant improvements addressing the following areas: prevention, educational programming, and reintegration or transition. Research indicates that students with significant antisocial behaviors can be identified fairly accurately by age 9, with some research indicating even earlier. However, students do not typically receive effective interventions until they have first been unsuccessful in their current educational setting. Research-based prevention strategies need to be implemented with at risk children to assist in preventing later involvement with the juvenile justice system. Once students are in the justice system, coordination and delivery of special education services have traditionally been inappropriate and ineffective. Even though promising and preferred strategies exist regarding the effective provision of educational services to students with disabilities, these strategies and practices have not been consistently or effectively applied to children with disabilities at risk of involvement in or in the juvenile justice system.

Interagency coordination between education and justice agencies, at a minimum, is needed to enhance the knowledge and use of research-based strategies and practices in the justice system, consistent with the provisions of IDEA. Finally, interagency efforts involving families and communities are needed to facilitate the successful reintegration of students with disabilities back into their home school and community when appropriate. Research has shown that few students, once they are involved with the justice system are able to return to their home school and later exit school appropriately with the skills needed to be successful within their community.

This priority represents a collaborative effort between the Department of Education, Office of Special Education and Rehabilitative Services, Office of Special Education Programs, Office of Vocational and Adult Education, and the Department of Justice, Office of Juvenile Justice and Delinquency Prevention. The Office of Special Education Programs and the Office of Juvenile Justice and Deliquency Prevention held a focus group on students with disabilities in the Justice system. Copies of these preceedings can be obtained by contacting Project FORUM at the National Association of State Directors of Special Education (703) 519–3800.

This priority is expected to have a significant impact on the improvement of services for students with disabilities in the justice system. Improvements in the areas of prevention, educational services, and reintegration based on a combination of research, training, and technical assistance will lead to improved results for children with disabilities.

Priority

The Secretary establishes an absolute priority to support a Center for Students With Disabilities Involved With or at Risk of Involvement With the Juvenile Justice System that will provide guidance and assistance to States, schools, justice programs, families, and communities in designing, implementing, and evaluating comprehensive educational programs, based on research validated practices, for students with disabilities at risk of involvement or involved in the juvenile justice system. The Center will focus on three broad areas: (1) prevention programs, (2) educational programs, and (3) reintegration or transition programs. The Center must address these three areas through research, training, and technical assistance and dissemination.

Research activities of the Center must include but are not limited to:

(a) Evaluating the current state of policy and practice regarding students with disabilities in the juvenile justice system. This evaluation must include relevant State and local policies and guidelines, cross-agency and multi-agency coordination strategies, and existing research-validated practices;

(b) Synthesizing relevant research findings focusing on preferred or promising practices in prevention of delinquency, educational programming for students with disabilities, and reintegration or transition to home schools and communities;

(c) Developing and applying criteria for identifying exemplary programs for students with disabilities in the juvenile justice system that address the three focus areas of the Center; and

(d) Producing four white papers, one per year beginning in the second year, that address special issues regarding this population of students. Two papers will cover the following topics: (1) Disproportionate representation of minority youth with disabilities in the juvenile justice system; and (2) coordination of services between education, justice, and mental health agencies to promote more effective services. The two additional topics will be suggested by the applicant and subject to approval by the project officer.

National dissemination and technical assistance activities of the Center must, at a minimum:

(a) Prepare and disseminate information materials designed to increase awareness of and use of research validated practices to a variety of audiences (e.g., educators, justice personnel, mental health personnel, judges, policymakers, families and other service providers).

(b) Reflect the three broad focus areas of the Center: (1) Delinquency prevention, (2) educational programming for students with disabilities, and (3) reintegration or transition to home schools and communities;

(c) Establish a coordinated network of researchers, practitioners, family members, rehabilitated individuals, associations that represent workers in facilities, and policymakers from education, justice, and mental health agencies who will serve as resources to States, communities, justice programs and schools in designing, implementing, and evaluating effective programs; and

(d) Provide for information exchanges between researchers and practitioners who direct model programs and those seeking to design or implement model programs. Information must be exchanged through a variety of methods, including two regional forums during each of the first four years of the project, and a national forum in the fifth year. These exchanges must be designed to expand the coordinated network, develop awareness of research-based practices, and create a dialog about comprehensive services for students

with disabilities in the juvenile justice system. The forums must include examples and descriptions of model programs addressing the three focus areas of the Center.

(e) Produce a model ''blueprint'' that would permit others to replicate or implement preferred practices or model programs that include alternative approaches to delivery of effective services for students with disabilities in the justice system. The ''blueprint'' will also identify barriers to effective programming and suggest strategies for overcoming these barriers.

Training activities of the Center must include but are not limited to:

(a) Identifying a common core of knowledge and skills regarding students with disabilities in the justice system that are appropriate for personnel serving this population including: teachers, paraprofessionals, mental health personnel, administrators, justice and law enforcement personnel;

(b) Funding as project research assistants at least three graduate students per year who have concentrations in special education or criminal justice. These students will assist with project facilitation and the center's research, and evaluation of programs; and

(c) Arranging for two results-based evaluations. The evaluation team must consist of three experts approved by the (OSEP) project officer. The services of the review team, including a two-day site visit to the Center, are to be performed during the last half of the Center's second and fourth years and may be included in that year's evaluation required under 34 CFR 75.590. Costs associated with the services to be performed by the review team must also be included in the Center's budget for years two and four. These costs are estimated to be approximately $6,000 for each evaluation cycle.

The Center must also—

(1) Prepare the research findings and products from the project in formats that are useful for specific audiences, including educators, school administrators, justice employees, judges, law enforcement personnel, public defenders, families, ILCs, PTIs, P&As, and local, State, and national policymakers. (See section 661(f)(2)(B) of IDEA);

(2) Meet with the Office of Special Education Programs (OSEP) project officer in the first four months of the project to review the program of research and dissemination approaches;

(3) Budget two trips annually to Washington, DC for (1) a two-day Research Project Director's meeting; and (2) another meeting to meet and collaborate with the OSEP project officer; and

(5) Collaborate with other relevant federally supported activities and projects sponsored by the Department of Education, Office of Special Education Programs, and the Department of Justice, Office of Juvenile Justice and Delinquency Prevention, and the Department of Health and Human Services, and develop linkages with Education Department and Justice Department technical assistance providers to communicate research findings and distribute products.

Under this priority, the Secretary will make one award for a cooperative agreement with a project period of up to 60 months subject to the requirements of 34 CFR 75.253(a) for continuation awards. In determining whether to continue the Center for the fourth and fifth years of the project period, the Secretary and the Attorney General will consider the requirements of 34 CFR 75.253(a), and—

(1) The recommendation of a review team consisting of three experts selected by the Secretary. The services of the review team, including a two-day site visit to the grantee, are to be performed during the last half of the project's second year and may be included in that year's evaluation required under 34 CFR 75.590. Costs associated with the services to be performed by the review team must also be included in the project's budget for year two. These costs are estimated to be approximately $6,000;

(2) The timeliness and effectiveness with which all requirements of the negotiated cooperative agreement have been or are being met by the Center; and

(3) The degree to which the Center's design and methodology demonstrates the potential for advancing significant new knowledge.

Project Period: Up to 60 months.

Maximum Award: The Secretary rejects and does not consider an application that proposes a budget exceeding $750,000 for year one and $500,000 for years two through five, for any single budget period of 12 months. The Secretary may change the maximum amounts through a notice published in the **Federal Register**.

Note: The projected funding for this project is $750,000 for year one and $500,000 for years two through five. Funding is contingent upon the availability of funds, including Federal interagency support for this project from the Department of Education, and the Department of Justice.

Page Limits: Part III of the application, the application narrative, is where an applicant addresses the selection criteria that are used by reviewers in evaluating an application. An applicant must limit Part III to the equivalent of no more than 70 double-spaced pages, using the following standards: (1) A ''page'' is 8½″ x 11″ (on one side only) with one-inch margins (top, bottom, and sides); (2) All text in the application narrative, including titles, headings, footnotes, quotations, references, and captions, as well as all text in charts, tables, figures, and graphs, must be double-spaced (no more than 3 lines per vertical inch). If using a proportional computer font, use no smaller than a 12-point font, and an average character density no greater than 18 characters per inch. If using a nonproportional font or a typewriter, do not use more than 12 characters to the inch.

The page limit does not apply to Part I—the cover sheet; Part II—the budget section (including the narrative budget justification); Part IV—the assurances and certifications; or the one-page abstract, resumes, bibliography, and letters of support. However, all of the application narrative must be included in Part III. If an application narrative uses a smaller print size, spacing, or margin that would make the narrative exceed the equivalent of the page limit, the application will not be considered for funding.

Absolute Priority 3—Research Institute To Enhance the Role of Special Education and Children With Disabilities in Education Policy Reform (84.324P)

Education reforms are often leveraged through enhanced accountability for students outcomes, school improvement, and personnel performance. Findings from the Center for Policy Research on the Impact of General and Special Education Reform indicate that inclusion of students with disabilities in these general accountability efforts is one of the major forces shaping reform of special education. IDEA reflects an increased emphasis on including students with disabilities in accountability systems by requiring participation in general State and district-wide assessments. The amendments also require States to establish indicators to use in assessing progress toward achieving goals that address the performance of children with disabilities on assessments, drop-out rates and graduation rates.

Priority

The Secretary establishes an absolute priority for a research institute to study the role of special education and

children with disabilities in educational policy reform, specifically initiatives designed to improve student performance through increased accountability. A project funded under this priority must—

(a) Identify and review critical gaps in the current knowledge in the following areas:

(1) How broad education policy reforms that incorporate high-stakes accountability mechanisms include consideration of the special education system;

(2) The criteria for which special education has historically been held accountable and how these criteria have been assessed;

(3) How traditional special education accountability mechanisms at both the systems level (e.g., State improvement planning and compliance monitoring, due process, and judicial resolution) and the individual child or student level (e.g., large-scale assessments provided with accommodations, alternate assessments, individualized education programs, individualized family services plans) have impacted outcomes for children with disabilities;

(4) How students with disabilities are impacted by the recent large-scale, high stakes State and national accountability-based education policy reforms (e.g., State and district assessments, enhanced graduation and exiting requirements, governance and professional preparation and development reforms and other standards-based reform initiatives), including consideration of developed models of inclusive special education accountability (e.g., models developed by the National Association of State Directors of Special Education and the National Center for Educational Outcomes); and

(5) How changes and reforms in special education might better align with and support such large-scale, high stakes State and national accountability-based education policy reforms.

(b) In consultation with the Office of Special Education Programs (OSEP), design and conduct a strategic program of research that addresses knowledge gaps identified in paragraph (a) by:

(1) Conducting a rigorous research program that builds upon recent and current research on broad education policy reforms that incorporate high-stakes accountability mechanisms, including research by the recent Center for Policy Research on the Impact of General and Special Education Reform;

(2) Using a variety of methodologies designed to comprehensively examine the breadth of accountability mechanisms;

(3) Conducting the program of research in such settings to insure that the impact of accountability-based education policy reforms on disabled minority, immigrant, and migrant populations, will be examined; and

(4) Collaborating with other research institutions and studies and evaluations supported under IDEA, including the national assessment of special education activities (Section 674(b) of IDEA).

(c) Design, implement, and evaluate a dissemination approach that links research to practice and promotes the use of current knowledge and ongoing research findings. This approach must—

(1) Develop linkages with Education Department technical assistance providers to communicate research findings and distribute products; and

(2) Prepare the research findings and products from the project in formats that are useful for specific audiences, including general education researchers; and local, State, and national policymakers; as well as education practitioners.

(d) Fund at least three graduate students per year as research assistants who have concentrations in either education policy or disability issues;

(e) Meet with the OSEP project officer in the first four months of the project to review the program of research and dissemination approaches; and

(f) In addition to the annual two-day Project Directors' meeting in Washington, DC listed in the General Requirements section of this notice, budget for another annual two-day trip to Washington, DC to collaborate with the OSEP project officer by sharing information and discussing implementation and dissemination issues.

Under this priority, the Secretary will make one award for cooperative agreements with a project period of up to 60 months subject to the requirements of 34 CFR 75.253(a) for continuation awards.

Project Period: Up to 60 months.

Maximum Award: The Secretary rejects and does not consider an application that proposes a budget exceeding $700,000 for any single budget period of 12 months. The Secretary may change the maximum amounts through a notice published in the **Federal Register**.

Page Limits: Part III of the application, the application narrative, is where an applicant addresses the selection criteria that are used by reviewers in evaluating an application. An applicant must limit Part III to the equivalent of no more than 70 double-spaced pages, using the following standards: (1) A ''page'' is 8½″ x 11″ (on one side only) with one-inch margins (top, bottom, and sides); (2) All text in the application narrative, including titles, headings, footnotes, quotations, references, and captions, as well as all text in charts, tables, figures, and graphs, must be double-spaced (no more than 3 lines per vertical inch). If using a proportional computer font, use no smaller than a 12-point font, and an average character density no greater than 18 characters per inch. If using a nonproportional font or a typewriter, do not use more than 12 characters to the inch.

The page limit does not apply to Part I—the cover sheet; Part II—the budget section (including the narrative budget justification); Part IV—the assurances and certifications; or the one-page abstract, resumes, bibliography, and letters of support. However, all of the application narrative must be included in Part III. If an application narrative uses a smaller print size, spacing, or margin that would make the narrative exceed the equivalent of the page limit, the application will not be considered for funding.

Absolute Priority 4—Research and Training Center in Service Coordination for Part C of IDEA (84.324L)

Background

Services to infants and toddlers with disabilities and their families must be delivered in a timely, comprehensive manner in order to enhance the development of the child and to meet the needs of the family. Service coordination is a key component in ensuring that eligible infants and toddlers and their families receive prompt, appropriate, and coordinated services, especially where services are provided by multiple providers from various disciplines, through both public and private agencies, and in a variety of settings.

Early research in service coordination resulted in the identification of personal characteristics and qualities of good service coordinators. Training programs focused on developing skills in communication and early intervention techniques. While these continue to be important components in training programs for service coordinators, changes in social policy and the growth and development of Part C systems over the past decade have added new responsibilities and role changes for service coordinators.

There is a lack of empirical evidence defining effective service coordination and its components. This information is needed in order to identify the activities of and skills needed by a service coordinator or service coordinators and

to develop promising practices for training effective service coordinators.

The purpose of this priority is to (1) establish a research and training center to determine the components of effective service coordination, (2) identify and disseminate promising practices in effective service coordination, (3) prepare effective service coordinators and trainers of service coordinators, (4) prepare researchers to investigate issues and components of effective service coordination and related promising practices, and (5) provide families, service coordinators, early interventionists, trainers, researchers, and policymakers with empirical evidence of promising practices in and the effectiveness of service coordination.

Priority

The Secretary establishes an absolute priority for the purpose of establishing a research and training center to (1) carry out a coordinated, integrated, and advanced research program in service coordination and (2) provide training in service coordination for graduate, pre-service, and in-service practitioners, trainers, and researchers.

The Center must examine the following areas—

(a) The critical activities and skills required to provide effective service coordination;

(b) Promising practices for improving the quality and acquisition of these critical activities and skills for service coordinators;

(c) Access of families to effective service coordination, with particular attention to high density population areas, rural areas, and areas of high poverty;

(d) Family satisfaction with service coordination;

(e) Quality measures of effective service coordination; and

(f) Reimbursement issues as they relate to the delivery of service.

The Center must perform the following activities —

(a) Disseminate its findings and curriculum for training service coordinators to institutions of higher education (IHEs) and to agencies that provide training and professional development activities for service coordinators. The Center must disseminate information on promising practices in service coordination and work with programs that train service coordinators and individuals working in the area of early intervention;

(b) Develop, validate, and disseminate a curriculum for training service coordinators based on the knowledge gained from the Center's research activities;

(c) Partner with Part C lead agencies; parent training and information centers; community parent resource centers; professional and advocacy organizations; IHEs including Historically Black Colleges and Universities (HBCUs); agencies and organizations involved in delivery of services to minority infants and toddlers with disabilities including those who are African American, Native American, Hispanic, and Asian American; and other agencies and organizations involved in providing services to infants and toddlers with disabilities and their families, in planning and implementing its research and training;

(d) Develop and disseminate informational and training materials based on knowledge gained from the Center's research activities;

(e) Provide training and research opportunities for at least three graduate students, including students who are from traditionally underrepresented groups;

(f) Meet with the OSEP project officer in the first three months of the project to review the program of research and the initial plan for training; and

(g) Prepare the research and disseminate the research findings and products from the Center in formats that are useful for specific audiences, including families, administrators, early interventionists, related service personnel, teachers, and individuals with disabilities (See section 661(f)(2)(B) of IDEA).

Under this priority, the project period is up to 60 months subject to the requirements of 34 CFR 75.253(a) for continuation awards. In determining whether to continue the project for the fourth and fifth years of the project period, the Secretary will consider the requirements of 34 CFR 75.253(a), and—

(a) The recommendation of a review team consisting of three experts selected by the Secretary. The services of the review team, including a two-day site visit to the project, are to be performed during the last half of the project's second year and may be included in that year's evaluation required under 34 CFR 75.590. Costs associated with the services to be performed by the review team must also be included in the project's budget for year two. These costs are estimated to be approximately $6,000;

(b) The timeliness and effectiveness with which all requirements of the grant have been or are being met by the project; and

(c) The degree to which the project's design and methodology demonstrates the potential for advancing significant new knowledge.

Project Period: Up to 60 months.

Maximum Award: The Secretary rejects and does not consider an application that proposes a budget exceeding $500,000 for any single budget period of 12 months. The Secretary may change the maximum amount through a notice published in the **Federal Register**.

Page Limits: Part III of the application, the application narrative, is where an applicant addresses the selection criteria that are used by reviewers in evaluating an application. An applicant must limit Part III to the equivalent of no more than 70 double-spaced pages, using the following standards: (1) A ''page'' is 8½″ x 11″ (on one side only) with one-inch margins (top, bottom, and sides); (2) All text in the application narrative, including titles, headings, footnotes, quotations, references, and captions, as well as all text in charts, tables, figures, and graphs, must be double-spaced (no more than 3 lines per vertical inch). If using a proportional computer font, use no smaller than a 12-point font, and an average character density no greater than 18 characters per inch. If using a nonproportional font or a typewriter, do not use more than 12 characters to the inch.

The page limit does not apply to Part I—the cover sheet; Part II—the budget section (including the narrative budget justification); Part IV—the assurances and certifications; or the one-page abstract, résumés, bibliography, and letters of support. However, all of the application narrative must be included in Part III. If an application narrative uses a smaller print size, spacing, or margin that would make the narrative exceed the equivalent of the page limit, the application will not be considered for funding.

Absolute Priority 5—Improving Post-School Outcomes: Identifying and Promoting What Works (84.324W)

Background

With the passage of the Education of the Handicapped Act Amendments of 1983, a Federal initiative was begun to assist high school youth with disabilities in achieving their goals for adult life, including postsecondary education, continuing education, competitive employment, and independent living. This process, known as secondary transition, has continued to be defined and developed in legislation, research and practice; and to a large extent, has been the impetus for the shift in special education from an emphasis on process to one of

achieving better results for children with disabilities. The Office of Special Education Programs (OSEP) has funded approximately 500 secondary transition, postsecondary education, and drop out prevention and intervention projects since 1984 to develop, refine, and validate effective programs and practices.

The purpose of this priority is to fund one project that will—

(a) Synthesize the professional literature on improving academic results, secondary transition practice, postsecondary educational supports, and dropout prevention and intervention;

(b) Analyze important features, findings and outcomes of model demonstration projects in these areas, including but not limited to, projects funded by OSEP, the Rehabilitation Services Administration (RSA), and the National Institute on Disability and Rehabilitation Research (NIDRR); and

(c) Summarize, proactively disseminate, and publicize the results of these studies in an effort to inform policy and practice.

Priority

The Secretary establishes an absolute priority to support a project that will identify and promote effective policy and practice that will improve results for secondary-aged youth and young adults with disabilities. At a minimum, this project must—

(a) Synthesize the extant professional knowledge base in each of four areas:

—improving academic results
—secondary transition practice
—postsecondary educational supports, and
—dropout prevention and intervention, including factors associated with early school exit for students with disabilities.

Each synthesis must:

(1) Develop a conceptual framework around which research questions will be posed and the synthesis conducted. Develop these research questions with input from potential consumers of the synthesis to enhance the usability and validity of the findings. Consumers include technical assistance providers, policymakers, educators, other relevant practitioners, individuals with disabilities, and parents;

(2) Identify and implement rigorous social science methods for synthesizing the professional knowledge base (including but not limited to, integrative reviews (Cooper, 1982), best-evidence synthesis (Slavin, 1989), meta-analysis (Glass, 1977), multi-vocal approach (Ogawa & Malen, 1991), and National Institute of Mental Health consensus development program (Huberman, 1977));

(3) Implement procedures for locating and organizing the extant literature and ensure that these procedures address and guard against potential threats to the integrity of each synthesis, including the generalization of findings;

(4) Establish criteria and procedures for judging the appropriateness of each synthesis;

(5) Meet with OSEP to review the project's methodological approach for conducting the synthesis prior to initiating the synthesis;

(6) Analyze and interpret the professional knowledge base, including identification of general trends in the literature, points of consensus and conflict among the findings, and areas of evidence where the literature base is lacking. The interpretation of the literature base must address the contributions of the findings for improving policy, transition practice and drop out prevention and intervention, and research priorities in the four focus areas; and

(7) Submit a draft report of the synthesis in each of the focus areas, and based on reviews by OSEP staff and potential consumers, revise and submit a final report.

(b) Conduct an analysis to identify effective approaches and practices of the important features, findings and outcomes of model demonstration projects (including, but not limited to, projects funded by OSEP, RSA, NIDRR, and OPE) in each of four areas:

—improving academic results
—secondary transition practice
—postsecondary educational supports, and
—dropout prevention and intervention, incorporating the following activities in each analysis:

(1) Identify the relevant projects for each analysis. Describe and implement procedures for locating and organizing relevant information on the individual projects, including sampling techniques, if appropriate;

(2) Articulate a research-based conceptual framework to guide the selection of variables to be examined within and across projects, including demographics, target population, purpose, activities, outcomes, and barriers. Pose research questions around which the analysis will be conducted. Develop these research questions with input from potential consumers of the information to enhance the usability and validity of the research findings. Consumers include technical assistance providers, policymakers, educators, other relevant practitioners, individuals with disabilities, and parents;

(3) Identify and implement rigorous methods for conducting each analysis;

(4) Meet with OSEP to review the project's research questions and methodological approach for conducting the analysis prior to initiation;

(5) Analyze and interpret the findings of the analysis, including similarities and differences among project goals, activities, staffing and costs; points of consensus and conflict among the findings or outcomes of the demonstrations, and the characteristics of model programs that hold significant promise for the field based upon outcome data. In addition, the analysis must link to the synthesis on this topic and provide direction for future policy formulation, practice implementation, and research priorities; and

(6) Submit a draft report of the analysis in each of the focus areas, and based on reviews by OSEP staff and potential consumers, revise, and submit a final report.

(c) Summarize, proactively disseminate, and publicize the results of these studies to inform policy and practice, incorporating the following activities into the project design:

(1) Develop and implement a communication plan that includes the types of products to be created, proposed audiences, procedures for adapting the form and content of the products based upon the audience or audiences, vehicles for dissemination, and timelines. In particular, address how the project will provide updated information at regular intervals to each of the following audiences: OSERS-funded technical assistance and dissemination projects, the Parent Training and Information Centers; and the State Program Improvement grantees. The project may propose collaborative dissemination activities with one or more of these projects.

(2) Meet with OSEP to review the project's communication plan prior to implementation.

In addition to the annual two-day Project Directors' meeting in Washington, DC listed in the General Requirements section of this notice, projects must budget for another meeting each year in Washington, DC with OSEP to share information and discuss project implementation issues.

In deciding whether to continue this project for the fourth and fifth years, the Secretary, will consider the requirements of 34 CFR 75.253(a), and—

(a) The recommendation of a review team consisting of three experts selected by the Secretary. The services of the review team, including a two-day site visit to the grantee, are to be performed during the last half of the project's

second year and may be included in that year's evaluation required under 34 CFR 75.590. Costs associated with the services to be performed by the review team must also be included in the project's budget for year two. These costs are estimated to be approximately $6,000;

(b) The timeliness and effectiveness with which all requirements of the negotiated cooperative agreement have been or are being met by the project; and

(c) The degree to which the project's design and methodology demonstrates the potential for advancing significant new knowledge.

Project Period: Up to 60 months.

Maximum Award: The Secretary rejects and does not consider an application that proposes a budget exceeding $500,000 for any single budget period of 12 months. The Secretary may change the maximum amount through a notice published in the **Federal Register**.

Page Limits: Part III of the application, the application narrative, is where an applicant addresses the selection criteria that are used by reviewers in evaluating an application. An applicant must limit Part III to the equivalent of no more than 60 double-spaced pages, using the following standards: (1) A ''page'' is 8½″ x 11″ (on one side only) with one-inch margins (top, bottom, and sides); (2) All text in the application narrative, including titles, headings, footnotes, quotations, references, and captions, as well as all text in charts, tables, figures, and graphs, must be double-spaced (no more than 3 lines per vertical inch). If using a proportional computer font, use no smaller than a 12-point font, and an average character density no greater than 18 characters per inch. If using a nonproportional font or a typewriter, do not use more than 12 characters to the inch.

The page limit does not apply to Part I—the cover sheet; Part II—the budget section (including the narrative budget justification); Part IV—the assurances and certifications; or the one-page abstract, resumes, bibliography, and letters of support. However, all of the application narrative must be included in Part III. If an application narrative uses a smaller print size, spacing, or margin that would make the narrative exceed the equivalent of the page limit, the application will not be considered for funding.

Special Education—Technical Assitance and Dissemination to Improve Services and Results for Children With Disabilities

Purpose of Program: The purpose of this program is to provide technical assistance and information through such mechanisms as institutes, regional resource centers, clearinghouses and programs that support States and local entities in building capacity, to improve early intervention, educational, and transitional services and results for children with disabilities and their families, and address systemic-change goals and priorities.

Applicable Regulations: (a) The Education Department General Administrative Regulations (EDGAR) in 34 CFR parts 74, 75, 77, 79, 80, 81, 82, 85, and 86; (b) The selection criteria for these priorities are drawn from the EDGAR general selection criteria menu. The specific selection criteria for each priority are included in the funding application packet for the applicable competition.

Note: The regulations in 34 CFR part 86 apply to institutions of higher education only.

Eligible Applicants: State and local educational agencies, institutions of higher education, other public agencies, private nonprofit organizations, outlying areas, freely associated States, Indian tribes or tribal organizations, and for-profit organizations.

Priority

Under section 685 of IDEA and 34 CFR 75.105(c)(3), the Secretary gives an absolute preference to applications that meet the following priorities. The Secretary funds under these competitions only those applications that meet one of these absolute priorities:

Absolute Priority 1—Projects for Children and Young Adults Who Are Deaf-Blind (84.326C)

Background

IDEA includes provisions designed to ensure that each child with a disability is provided a high-quality individual program of services to meet their developmental and educational needs. For children who are deaf and blind to receive such services, intensive technical assistance must be afforded State and local educational agencies regarding appropriate educational placements, accommodations, environmental adaptations, support services and other matters. In addition, given the severity of deaf-blindness and the low-incidence nature of this population, many early intervention programs or local school districts lack personnel with the training or experience to serve children who are deaf-blind. For these reasons, the following priority supports projects that provide specialized technical assistance regarding the provision of early intervention, special education, related, and transitional services to children who are deaf-blind.

Priority

This priority supports projects that build the capacity of State and local agencies to facilitate the achievement of improved outcomes by children who are deaf-blind, and their families. Two specific types of projects are supported: State and Multi-State Projects, and Optional Match Maker Projects.

(a) *State and Multi State Projects.* These projects provide technical assistance, information, and training that address the early intervention, special education, related services, and transitional service needs of children with deaf-blindness and enhance State capacity to improve services and outcomes for such children and their families. Projects must:

(1) Identify specific project goals and objectives in providing an appropriate array of technical assistance services;

(2) Facilitate systemic-change goals and school reform;

(3) Enhance State capacity to improve services and outcomes for deaf-blind children and their families;

(4) Provide technical assistance, information, and training that:

(i) Focus on implementation of research-based, effective practices that result in appropriate assessment, placement, and support services to all children who are deaf-blind in the State;

(ii) Help administrators develop and operate effective State and local programs for serving children who are deaf-blind;

(iii) Ensure that service providers have the necessary skills and knowledge to effectively serve children who are deaf-blind; and

(iv) Address the needs of families of children who are deaf-blind.

(5) Maintain basic demographic information on children with deaf-blindness in the State for program planning and evaluation purposes. Such data should include hearing, vision, etiology, educational placement, living arrangement, and other information necessary to ensure a high quality program that meets the needs of the State or States served by the project;

(6) Maintain an assessment of current needs of the State and utilize data to determine State-wide priorities for technical assistance services across all age ranges;

(7) Develop and implement procedures to evaluate the impact of program activities on services and outcomes for children with deaf-blindness and their families, and on

increasing State and local capacity to provide services and facilitate improved outcomes. Such procedures must provide for—

(i) Evaluating project goals and objectives, and the effectiveness of project strategies relative to such goals and objectives; and

(ii) Including measures of change in outcomes for children with deaf-blindness and other indicators that document actual benefits of conducting the project;

(8) Facilitate ongoing coordination and collaboration with State and local educational agencies, as well as other relevant agencies and organizations responsible for providing services to children who are deaf-blind by—

(i) Promoting service integration that enables children with deaf-blindness to receive services in natural environments and inclusive settings, as appropriate; and

(ii) Encouraging systemic change efforts for addressing the needs of children with deaf-blindness by improving education opportunities and inter-agency cooperation, and reducing duplication of effort;

(9) Establish and maintain an advisory committee to assist in promoting project activities. Each committee must include at least one individual with deaf-blindness, a parent of a child with deaf-blindness, a representative of each State educational agency and each State lead agency under Part C of IDEA in the State (or States) served by the project, and a limited number of professionals with training and experience in serving children with deaf-blindness; and

(10) Budget for a three-day Project Directors' meeting in Washington, DC during each year of the project.

Additional Requirements Related to State and Multi-State Projects

(1) The Secretary may make awards under this priority to support single or multi-State projects. A State may be served by only one supported project.

(2) The Secretary considers the following factors in determining the funding level for each award for a single or multi-State project award:

(i) The total number of children birth through age 21 in the State;

(ii) The number of children with deaf-blindness in the State;

(iii) The State per pupil cost; and

(iv) The quality of the application submitted.

(3) In making awards under this priority, the Secretary shall consider the availability and quality of existing services for children with deaf-blindness in different areas of the country, and, to the extent practical, will afford different geographic areas the opportunity to receive project assistance.

(4) The project period under this priority is (up to) 48 months subject to the requirements of 34 CFR 75.253(a) for continuation awards. In determining whether to continue the project for the third and fourth years of the project period, the Secretary will consider the requirements of 34 CFR 75.253(a), and the recommendation of a review team consisting of three experts selected by the Secretary. The services of the review team, including a two-day site visit to the project, are to be performed during the project's second year and may be included in that year's evaluation required under 34 CFR 75.590. Costs associated with the services to be performed by the review team must also be included in the project's budget for year two. These costs are estimated to be approximately $6,000.

(5) Funds awarded under this priority may not be used for direct early intervention, special education, or related services provided under Parts B and C of IDEA.

(b) *Optional Match Maker Projects.* An applicant for a State and Multi-State project may propose to establish a Match Maker project as an additional component of its State or Multi-State application. Match Maker projects are intended to expand the capacity of State and local educational agencies, beyond that supported by the State and Multi-State project, to effectively serve children who are deaf-blind by developing, implementing, evaluating, and disseminating new or improved approaches for providing early intervention, special education and related services to infants, toddlers, and children who are deaf-blind.

Only those applications that are approved for a State and Multi-State project can be considered for possible funding of a Match Maker project. Applicants must submit a separate application for the State and Multi-State project and for the Match Maker project components. Applications for Match Maker projects must include strategies for State or local authorities to assume responsibility for supporting the project activities beyond the Federally-supported project period.

Match Maker projects must:

(1) Develop and implement a model for expanding the capacity of SEAs and LEAs to effectively serve children who are deaf-blind that includes specific strategies based on current theory, research, or evaluation data;

(2) Evaluate the model in paragraph (a) by using multiple measures of results to determine the effectiveness of the model and its components. All projects must include measures of individual child change and other indicators of the effects of the model (e.g., family outcomes, peer outcomes, teacher outcomes), and cost data associated with implementing the model;

(3) Collaborate with families, relevant agencies, service providers, and other stakeholders; and

(4) Produce detailed procedures and materials that would enable others to replicate the model.

The Secretary particularly invites projects that propose to provide, under its optional Match Maker component, effective practices that address one or more of the following topics:

(1) Models for providing technical assistance regarding the delivery of services, including alternate assessments, to children with deaf-blindness in inclusive settings;

(2) The use of technology to enhance the dissemination of information on effective practices for individuals who are deaf-blind;

(3) Functional behavior assessments used to provide positive behavior supports for learners who are deaf-blind; and

(4) Integrating transition and technical assistance models within and across appropriate agencies.

Federal financial support for a Match Maker project will not exceed $50,000 per year for up to four years, and must be matched on a dollar-for-dollar basis by the applicant. Funding for a Match Maker project is in addition to the funding for the State and Multi-State project. Funds provided for a Match Maker project may not be used for direct services nor to supplant or replace funds awarded under the State and Multi-State projects.

Project Period: Up to 48 months.

Estimated Range: The estimated range of awards for State and Multi-State projects is $40,000–$550,000.

Maximum Award: The Secretary rejects and does not consider an application for: (1) a State and Multi-State project that proposes a budget exceeding $550,000 for any single budget period of 12 months, or (2) an optional Match Maker project that proposes a Federally-supported budget exceeding $50,000 for any single budget period of 12 months. The Secretary may change the maximum amount through a notice published in the **Federal Register**.

Page Limits: Part III of the application, the application narrative, is where an applicant addresses the selection criteria that are used by reviewers in evaluating an application. An applicant must limit Part III to the equivalent of

no more than 50-double spaced pages or no more than 60-doubled spaced pages if the applicant proposes to establish a match maker project, using the following standards: (1) A ''page'' is 8½″ × 11″ (on one side only) with one-inch margins (top, bottom, and sides); (2) All text in the application narrative, including titles, headings, footnotes, quotations, references, and captions, as well as all text in charts, tables, figures, and graphs, must be double-spaced (no more than 3 lines per vertical inch). If using a proportional computer font, use no smaller than a 12-point font, and an average character density no greater than 18 characters per inch. If using a nonproportional font or a typewriter, do not use more than 12 characters to the inch.

The page limit does not apply to Part I—the cover sheet; Part II—the budget section (including the narrative budget justification); Part IV—the assurances and certifications; or the one-page abstract, resumes, bibliography, and letters of support. However, all of the application narrative must be included in Part III. If an application narrative uses a smaller print size, spacing, or margin that would make the narrative exceed the equivalent of the page limit, the application will not be considered for funding.

Absolute Priority 2—Outreach Services to Minority Entities to Expand Research Capacity (84.326M)

Background

The Congress has found that the Federal government must be responsive to the growing needs of an increasingly more diverse society and that a more equitable distribution of resources is essential for the Federal government to meet its responsibility to provide an equal educational opportunity for all individuals.

The opportunity for full participation in awards for grants, cooperative agreements, and contracts by Historically Black Colleges and Universities (HBCUs) and other institutions of higher education with minority enrollments of at least 25 percent (OMIs) is essential if we are to take full advantage of the human resources we have to improve results for children with disabilities.

This priority focuses on assisting HBCUs and OMIs to prepare scholars for careers in research on early intervention, special education, and related services for infants, toddlers, and children with disabilities, consistent with the purposes of the program, described in Section 672 of the Act. This preparation must consist of engaging both faculty and students at HBCUs and OMIs in special education research activities. The activities focus on an area of critical need which has material application in today's changing environment and will likely be the subject of future research efforts—*the special education of children in urban and high poverty schools.* By building a cadre of experienced researchers on this important topic, the chances for increased participation in awards for grants, cooperative agreements and contracts by HBCUs and OMIs will be more likely.

The association between socioeconomic status and enrollment in special education has been well documented. Available data from the National Longitudinal Transition Study (NLTS) show that 68 percent of students in special education live in a household where the income is less than $25,000 per year versus 39 percent of the general population of youth.

This association is heightened in urban school districts and, to a lesser extent, rural districts. NLTS data reveal that only 34 percent of students in special education live in suburban school districts compared to 48 percent of all students. Data from the Office for Civil Rights indicate that 30 percent of all inner-city students live in poverty compared to 18 percent of students in non-inner city areas.

Urban school districts face a variety of unique challenges in meeting the educational needs of their students. Their schools often have high per student costs and limited financial resources. Their students are disproportionately poor and the population of individuals with limited English proficiency is among the fastest growing populations with special needs in some of these districts. This disproportionate representation of poor children in special education is also likely to be uniquely influenced by culturally diverse and urban settings, posing both opportunities and problems in the provision of special education services.

Priority

This priority supports a project whose purpose is to increase the participation of HBCUs and OMIs in discretionary research and development grant activities authorized under IDEA, and to increase the capacity of individuals at these institutions to conduct research and development activities in early intervention, special education, and related services. The project must implement Congress' direction in section 661(d)(2)(A)(i) to provide outreach and technical assistance to these institutions to increase their participation in competitions for research, demonstration and outreach grants, cooperative agreements, and contracts funded under the IDEA. Activities must include:

(a) Conducting research activities at HBCUs and OMIs as explained below that link scholars at HBCUs and OMIs with researchers at institutions with an established research capacity in a mentoring relationship to develop both individual and institutional research capacity at those HBCUs and OMIs with a demonstrated need for capacity development; and

(b) Providing linkages between HBCUs and OMIs with a demonstrated need for capacity development and institutions with an established research capacity to provide opportunities for researchers at those HBCUs and OMIs to develop first hand experience in the grants and contracts application process.

(c) Providing outreach and technical assistance to doctoral students at HBCUs and OMIs to increase their participation in competitions for grant awards to support student-initiated research in early intervention, special education, and related services.

All research activities must be conducted for the purpose of capacity building. The research project must include one or more components focused on issues related to improving the delivery of special education services to, and educational results for, children with disabilities in urban and high poverty schools. Other possible research topics may include:

(a) Effective intervention strategies that make a difference in the provision of a free appropriate public education to children with disabilities;

(b) Practices to promote the successful inclusion of children with disabilities in the least restrictive environment;

(c) Strategies for establishing high expectations for children with disabilities and increasing their participation in the general curriculum provided to all children;

(d) Strategies for promoting effective parental participation in the educational process, especially among parents who have difficulty in participating due to linguistic, cultural, or economic differences;

(e) Effective disciplinary approaches, including behavioral management strategies, for ensuring a safe and disciplined learning environment;

(f) Strategies to improve educational results for students with disabilities in secondary education settings and promote their successful transition to postsecondary settings; or

(g) Effective practices for promoting the coordination of special education services with health and social services for children with disabilities and their families.

The project must ensure that findings are communicated in appropriate formats for researchers. The project must also ensure that findings of importance to other audiences, such as teachers, administrators, and parents, are made available to the Department of Education's technical assistance, training and dissemination projects for distribution to those audiences.

The project must demonstrate experience and familiarity in research on children with disabilities in urban and high poverty schools with predominantly minority enrollments. The project must also demonstrate experience in capacity development in special education research, as well as a thorough understanding of the strengths and needs of HBCUs and OMIs.

In addition to the annual two day Project Directors' meeting in Washington, DC listed in the General Requirements section of this notice, the project must budget for another annual two-day trip to Washington, DC to collaborate with the Federal project officer and other projects funded under this priority by sharing information and discussing implementation, and dissemination issues, including the carrying out of cross-project dissemination activities.

Project Period: Up to 60 months.

Maximum Award: The Secretary rejects and does not consider an application that proposes a budget exceeding $1,000,000 for any single budget period of 12 months to support one cooperative agreement. The Secretary may change the maximum amount through a notice published in the **Federal Register**.

Page Limits: Part III of the application, the application narrative, is where an applicant addresses the selection criteria that are used by reviewers in evaluating an application. An applicant must limit Part III to the equivalent of no more than 75 double-spaced pages, using the following standards: (1) A ''page'' is 8½″ × 11″ (on one side only) with one-inch margins (top, bottom, and sides); (2) All text in the application narrative, including titles, headings, footnotes, quotations, references, and captions, as well as all text in charts, tables, figures, and graphs, must be double-spaced (no more than 3 lines per vertical inch). If using a proportional computer font, use no smaller than a 12-point font, and an average character density no greater than 18 characters per inch. If using a nonproportional font or a typewriter, do not use more than 12 characters to the inch.

The page limit does not apply to Part I—the cover sheet; Part II—the budget section (including the narrative budget justification); Part IV—the assurances and certifications; or the one-page abstract, resumes, bibliography, and letters of support. However, all of the application narrative must be included in Part III. If an application narrative uses a smaller print size, spacing, or margin that would make the narrative exceed the equivalent of the page limit, the application will not be considered for funding.

For Applications and General Information Contact: Requests for applications and general information should be addressed to the Grants and Contracts Services Team, 400 Maryland Avenue, SW, room 3317, Switzer Building, Washington, DC 20202–2641. The preferred method for requesting information is to FAX your request to: (202) 205–8717. Telephone: (202) 260–9182.

Individuals who use a telecommunications device for the deaf (TDD) may call the TDD number: (202) 205–8953.

Individuals with disabilities may obtain a copy of this notice or the application packages referred to in this notice in an alternate format (e.g., Braille, large print, audiotape, or computer diskette) by contacting the Department as listed above. However, the Department is not able to reproduce in an alternate format the standard forms included in the application package.

Intergovernmental Review

The Technical Assistance and Dissemination program in this notice is subject to the requirements of Executive Order 12372 and the regulations in 34 CFR Part 79. The objective of the Executive order is to foster an intergovernmental partnership and a strengthened federalism by relying on processes developed by State and local governments for coordination and review of proposed Federal financial assistance.

In accordance with the order, this document is intended to provide early notification of the Department's specific plans and actions for this program.

INDIVIDUALS WITH DISABILITIES EDUCATION ACT APPLICATION NOTICE FOR FISCAL YEAR 1999

CFDA No. and name	Applications available	Application deadline date	Deadline for intergovernmental review	Maximum award (per year)[1]	Project period	Page limit[2]	Estimated number of awards
84.324H National Center on Accessing the General Curriculum.	3/8/99	4/23/99	5/24/99	$500,000	Up to 60 mos	70	1
84.324J Center for Students With Disabilities Involved With and at Risk of Involvement With the Juvenile Justice System.	3/8/99	4/23/99	5/24/99	750,000	Up to 60 mos	70	1
84.324P Research Institute to Enhance the Role of Special Education and Children With Disabilities in Education Policy Reform.	3/8/99	4/23/99	5/24/99	700,000	Up to 60 mos	70	1
84.324L Research and Training Center in Service Coordination for Part C of IDEA.	3/8/99	4/23/99	5/24/99	500,000	Up to 60 mos	70	1

INDIVIDUALS WITH DISABILITIES EDUCATION ACT APPLICATION NOTICE FOR FISCAL YEAR 1999—Continued

CFDA No. and name	Applications available	Application deadline date	Deadline for intergovernmental review	Maximum award (per year)[1]	Project period	Page limit[2]	Estimated number of awards
84.324W Improving Post-School Outcomes: Identifying and Promoting What Works.	3/8/99	4/23/99	5/24/99	500,000	Up to 60 mos	60	1
84.326C Project for Children and Young Adults Who are Deaf-Blind.	3/8/99	4/30/99	5/31/99	550,000	Up to 48 mos	50	48
Optional Match Maker Project.	3/8/99	4/30/99	5/31/99	50,000	Up to 48 mos	60	10
84.326M Outreach Services to Minority Entities to Expand Research Capacity.	3/8/99	4/23/99	5/24/99	1,000,000	Up to 60 mos	75	1

[1] The Secretary rejects and does not consider an application that proposes a budget exceeding the amount listed for each priority for any single budget period of 12 months, except for the Center for Students with Disabilities Involved with and at Risk of Involvement with the Juvenile Justice System priority. For this priority, the Secretary rejects and does not consider an application that proposes a budget exceeding $750,000 for year one and $500,000 for years two through five, for any single budget period of 12 months.

[2] Applicants must limit the Application Narrative, Part III of the Application, to the page limits noted above. Please refer to the ''Page Limit'' requirements included under each priority and competition description in this notice. The Secretary rejects and does not consider an application that does not adhere to this requirement.

Electronic Access to This Document

Anyone may view this document, as well as all other Department of Education documents published in the **Federal Register**, in text or portable document format (pdf) on the World Wide Web at either of the following sites:

http://ocfo.ed.gov/fedreg.htm
http://www.ed.gov/news.html

To use the pdf you must have the Adobe Acrobat Reader Program with Search, which is available free at either of the previous sites. If you have questions about using the pdf, call the U.S. Government Printing Office at (202) 512–1530 or, toll free at 1–888–293–6498.

Anyone may also view these documents in text copy only on an electronic bulletin board of the Department. Telephone: (202) 219–1511 or, toll free, 1–800–222–4922. The documents are located under Option G—Files/Announcements, Bulletins, and Press Releases.

Note: The official version of a document is the document published in the **Federal Register**.

Dated: February 25, 1999.

Judith E. Heumann,

Assistant Secretary for Special Education and Rehabilitative Services.

[FR Doc. 99–5246 Filed 3–2–99; 8:45 am]

BILLING CODE 4000–01–P

federal register

Wednesday
March 3, 1999

Part IV

Environmental Protection Agency

40 CFR Part 80

Regulation of Fuels and Fuel Additives: Extension of the Reformulated Gasoline Program to the St. Louis, Missouri Moderate Ozone Nonattainment Area; Final Rule

ENVIRONMENTAL PROTECTION AGENCY

40 CFR Part 80

[FRL–6306–1]

Regulation of Fuels and Fuel Additives: Extension of the Reformulated Gasoline Program To the St. Louis, Missouri Moderate Ozone Nonattainment Area

AGENCY: Environmental Protection Agency (EPA).

ACTION: Final rule.

SUMMARY: Under section 211(k)(6) of the Clean Air Act, as amended (Act), the Administrator of EPA must require the sale of reformulated gasoline (RFG) in ozone nonattainment areas upon the application of the governor of the state in which the nonattainment area is located. This final action extends the Act's prohibition against the sale of conventional (i.e., non-reformulated) gasoline in RFG areas to the St. Louis, Missouri moderate ozone nonattainment area. The Agency will implement this prohibition on May 1, 1999, for all persons other than retailers and wholesale purchaser-consumers (i.e., refiners, importers, and distributors). For retailers and wholesale purchaser-consumers, EPA's final action implements the prohibition on June 1, 1999, as requested by Governor Mel Carnahan of the state of Missouri. On June 1, 1999, the St. Louis ozone nonattainment area will be a covered area for all purposes in the federal RFG program.

DATES: This final rule is effective February 25, 1999.

ADDRESSES: Materials relevant to this document have been placed in Docket A–98–38. The docket is located at the Air Docket Section, Mail Code 6102, U.S. Environmental Protection Agency, 401 M Street, SW, Washington, DC 20460, in room M–1500 Waterside Mall. Documents may be inspected from 8:00 a.m. to 5:30 p.m. A reasonable fee may be charged for copying docket materials.

An identical docket is also located in EPA's Region VII office in Docket A–98–38. The docket is located at 726 Minnesota Avenue, Kansas City, Kansas, 66101. In Region VII contact Wayne G. Leidwanger at (913) 551–7607 or Royan Teter at (913) 551–7609. Documents may be inspected from 9:00 a.m. to noon and from 1:00—4:00 p.m. A reasonable fee may be charged for copying docket material.

FOR FURTHER INFORMATION CONTACT: Karen Smith at U.S. Environmental Protection Agency, Office of Air and Radiation, 401 M Street, SW (6406J), Washington, DC 20460, (202) 564–9674.

SUPPLEMENTARY INFORMATION: Under section 211(k)(6) of the Clean Air Act, as amended (Act), the Administrator of EPA must require the sale of reformulated gasoline in an ozone nonattainment area classified as Marginal, Moderate, Serious, or Severe upon the application of the governor of the state in which the nonattainment area is located. This final action extends the prohibition set forth in section 211(k)(5) against the sale of conventional (i.e., non-reformulated) gasoline to the St. Louis, Missouri moderate ozone nonattainment area. The Agency is finalizing the implementation date of the prohibition described herein to take effect on May 1, 1999 for all persons other than retailers and wholesale purchaser-consumers (*i.e.*, refiners, importers, and distributors). For retailers and wholesale purchaser-consumers, EPA is finalizing the implementation of the prohibition described herein to take effect June 1, 1999 as requested by Governor Mel Carnahan of the state of Missouri. As of the implementation date for retailers and wholesale purchaser-consumers, the St. Louis ozone nonattainment area will be a covered area for all purposes in the federal RFG program.

The final preamble and regulatory language are also available electronically from the EPA internet Web site. This service is free of charge, except for any cost you already incur for internet connectivity. A copy of the **Federal Register** version is made available on the day of publication on the primary Web site listed below. The EPA Office of Mobile Sources also publishes these final notices on the secondary Web site listed below.

Internet (Web)

http://www.epa.gov/docs/fedrgstr/EPA–AIR/

(either select desired date or use Search feature)

http://www.epa.gov/OMSWWW/

(look in What's New or under the specific rulemaking topic)

Please note that due to differences between the software used to develop the document and the software into which the document may be downloaded, changes in format, page length, etc. may occur.

Regulated entities: Entities potentially regulated by this action are those which produce, supply or distribute motor gasoline. Regulated categories and entities include:

Category/examples regulated entities	U.S. NAICS title	NAIC code
Petroleum Refiners	Petroleum Refiners	324110.
Motor vehicle gasoline distributors	Petroleum Bulk Stations and Terminals	422710.
Motor vehicle gasoline distributors	Petroleum and Petroleum Products Wholesalers	4227, 422720.
Retailers	Gasoline Stations	447, 4471.

This table is not intended to be exhaustive, but rather provides a guide for readers regarding entities likely to be regulated by this action. This table lists the types of entities that EPA is now aware could potentially be regulated by this action. Other types of entities not listed in the table could also be regulated. To determine whether your business is regulated by this action, you should carefully examine the list of areas covered by the reformulated gasoline program in § 80.70 of title 40 of the Code of Federal Regulations. If you have questions regarding the applicability of this action to a particular entity, consult the person listed in the preceding **FOR FURTHER INFORMATION CONTACT** section.

The remainder of this final rulemaking is organized in the following sections:

I. Background
A. Clean Air Act Opt-in Provision
B. EPA Procedures and Missouri Opt-In Request
II. Action
III. Response to Comments
A. Comments Regarding Gasoline Supply
B. Comments on State Oxygen Content Standard
C. Comments on Regulatory Flexibility Analysis
IV. Environmental Impact
V. Administrative Designation and Regulatory Analysis
A. Executive Order 12866
B. Regulatory Flexibility
C. Executive Order 12875: Enhancing Intergovernmental Partnerships
D. Executive Order 13084: Consultation and Coordination with Indian Tribal Governments
E. Unfunded Mandates

F. Paperwork Reduction Act
G. Children's Health Protection
H. National Technology Transfer and Advancement Act of 1995 (NTTAA)
I. Statutory Authority
J. Judicial Review
K. Submission to Congress

I. Background

A. Clean Air Act Opt-in Provision

As part of the Clean Air Act Amendments of 1990, Congress added a new subsection (k) to section 211 of the Act. Subsection (k) prohibits the sale of gasoline that EPA has not certified as reformulated (''conventional gasoline'') in the nine worst ozone nonattainment areas beginning January 1, 1995. Section 211(k)(10)(D) defines the areas covered by the reformulated gasoline (RFG) program as the nine ozone nonattainment areas having a 1980 population in excess of 250,000 and having the highest ozone design values during the period 1987 through 1989.[1] Under section 211(k)(10)(D), any area reclassified as a severe ozone nonattainment area under section 181(b) is also to be included in the RFG program, such as Sacramento, California. EPA first published final regulations for the RFG program on February 16, 1994. *See* 59 FR 7716.

Other ozone nonattainment areas may be included in the program at the request of the Governor of the state in which the area is located. Section 211(k)(6)(A) provides that upon the application of a Governor, EPA shall apply the prohibition against selling conventional gasoline in ''any area in the State classified under subpart 2 of Part D of Title I as a Marginal, Moderate, Serious or Severe'' ozone nonattainment area. Subparagraph 211(k)(6)(A) further provides that EPA is to apply the prohibition as of the date the Administrator ''deems appropriate, not later than January 1, 1995, or 1 year after such application is received, whichever is later.'' In some cases the effective date may be extended for such an area as provided in section 211(k)(6)(B) based on a determination by EPA that there is ''insufficient domestic capacity to produce'' RFG. Finally, EPA is to publish a governor's application in the **Federal Register**.

Although section 211(k)(6) provides EPA discretion to establish the effective date for this prohibition to apply to such areas, EPA does not have discretion to deny a Governor's request. Therefore, the scope of EPA's Notice of Proposed Rulemaking (NPRM) was limited to proposing an effective date for St. Louis' opt-in to the RFG program. EPA solicited comments addressing the proposed implementation date and stated in the NPRM that it was not soliciting comments that supported or opposed St. Louis' participating in the RFG program.

B. EPA Procedures and Missouri Opt-in Request

EPA received an application July 13, 1998 from the Honorable Mel Carnahan, Governor of the State of Missouri, for the St. Louis moderate ozone nonattainment area to be included in the reformulated gasoline program. The Governor requested an implementation date of June 1, 1999. EPA published the Governor's letter in the **Federal Register**, as required by section 211(k)(6). On September 15, 1998 (63 FR 49317) EPA proposed to extend the RFG program to the St. Louis moderate ozone nonattainment area by setting two implementation dates. EPA proposed an effective date of May 1, 1999 for refiners, importers, and distributors and June 1, 1999 for retailers and wholesale purchaser-consumers. Today EPA is taking final action on that NPRM and establishing these effective dates for St. Louis' opt in to the RFG program.

After publication of the NPRM, EPA did not receive a request for a public hearing. Since EPA did not receive a request for a public hearing, the scheduled hearing was canceled and the comment period ended on October 15, 1998.

II. Action

Pursuant to the governor's letter and the provisions of section 211(k)(6), EPA is today adopting regulations that apply the prohibitions of subsection 211(k)(5) to the St. Louis, Missouri moderate ozone nonattainment area as of May 1, 1999, for all persons other than retailers and wholesale purchaser-consumers. This date applies to the refinery level and all other points in the distribution system other than the retail level. For retailers and wholesale purchaser-consumers, EPA is adopting regulations that apply the prohibitions of subsection 211(k)(5) to the St. Louis, Missouri ozone nonattainment area on June 1, 1999. As of the June 1, 1999 implementation date, this area will be treated as a covered area for all purposes of the federal RFG program.

EPA believes the implementation dates adopted today not only respond to the Governor's request, but also achieve a reasonable balance between requiring the earliest possible start date to achieve air quality benefits in St. Louis and providing adequate lead time for industry to prepare for program implementation. These dates are consistent with the State's request that EPA require that RFG be sold in the St. Louis area at the beginning of the high ozone season, which begins June 1. These dates will provide environmental benefits by allowing St. Louis to achieve VOC reduction benefits for the 1999 VOC control season.

EPA has concluded, based on its analysis of available information, including public comments received and discussed below (see III. Response to Comments), that the refining and distribution industry's capacity to supply federal RFG to St. Louis this summer exceeds the estimated demand. EPA has also concluded that the implementation dates adopted today provide adequate lead time to industry to set up storage and sales agreements to ensure supply of RFG to the St. Louis moderate ozone nonattainment area.

III. Response to Comments

Only one party, an association representing the interests of independent gasoline marketers, submitted comments on the proposed rulemaking. The comments addressed three particular concerns. EPA is responding to each of these comments in this section.

A. Comments Regarding Gasoline Supply

First, the commentor stated that EPA ignored the fact that the St. Louis metropolitan statistical area (MSA) extends into Illinois, an area that has its own summertime gasoline control (a Reid Vapor Pressure control of 7.2 psi). The commentor expressed concern that gasoline shortages in the St. Louis area could result from EPA's granting of the opt-in request, due to the need to supply three different gasolines (conventional gasoline, reformulated gasoline and conventional gasoline meeting the IL summertime gasoline standard) to the St. Louis MSA and surrounding counties.

Section 211(k)(6)(A) provides the Administrator broad discretion to establish an appropriate effective date for opt-in areas. The effective date shall be no later than one year after the governor's request to opt in is received, which in this case would be July 13, 1999. Factors EPA generally considers in setting effective dates include, but are not limited to, supply logistics, cost, potential price spikes, the number of current and potential suppliers for that market, whether such suppliers have experience producing RFG or the capability to produce RFG, intent of

[1] Applying these criteria, EPA has determined the nine covered areas to be the metropolitan areas including Los Angeles, Houston, New York City, Baltimore, Chicago, San Diego, Philadelphia, Hartford and Milwaukee.

suppliers to withdraw from the market, availability of adequate gasoline volumes, and the amount of lead time needed by suppliers and the distribution industry to set up storage and sales agreements to ensure supply. By evaluating these factors, EPA can make a determination as to whether industry's capacity to supply RFG for an opt-in area meets or exceeds the demand.

As the commentor noted, under section 211(k)(6)(B) the Administrator may determine, after consultation with the Secretary of Energy, that there is ''insufficient domestic capacity'' to produce RFG. EPA is not making such a determination in this case. EPA has consulted with the Department of Engergy (DOE) and has concluded that there is adequate domestic capability to produce RFG to meet the current demand nationwide as well as the addition of the St. Louis area in the summer of 1999. The commentor provided no evidence to the contrary and no comments were received from bulk terminal operators concerned about storage capacity or supply.

Based on the Energy Information Administration's (EIA) preliminary calculations (Docket A–98–38, II–D–02) using survey data and demand estimates, there are adequate RFG supplies for the areas currently considering opting in to the program. An estimated 63 thousand barrels per day of gasoline are required in St. Louis which could be covered by industry's current capacity to supply roughly an extra 300 thousand barrels per day of RFG in the eastern half of the U.S.

EIA's information also demonstrates that St. Louis has the capacity to store about 25 days supply of gasoline and distillate, well within the industry standard of between 20 and 29 days supply of gasoline and distillate. The area has a 3,200 thousand-barrel storage capacity.

The Missouri Department of Natural Resources convened a fuels summit in June 1998 to discuss various fuels options. EPA notes that no comments regarding supply concerns were made during the fuels summit held in St. Louis June 15–16, 1998. The final report issued by the facilitator of the fuels summit described the stakeholders' conclusions that RFG offered the benefit of continuity and stability, that the product is already in production, and that surplus capacity is available (see Docket A–98–38, II–D–03).

The commentor expressed concern that the price differential between gasoline meeting Illinois' summertime RVP standard and RFG would lead to marketers providing different gasolines to meet each requirement. EPA data from the 1998 RFG compliance surveys indicates that RFG sold in the southern region of the country, on average, meets the 7.2 p.s.i standard that applies in East St. Louis. In any event, EPA believes that refiners can produce a single fuel which will meet both the low RVP requirements of the East St. Louis area and the fuel specifications of the RFG program. In addition, EPA notes that, in this action, it is simply setting an effective date for the St. Louis opt in, and does not have the discretion under Section 211(k)(6) to deny the governor's request to opt in. Therefore, even if a price differential would result in marketers' choosing to provide different gasolines to the Missouri portion of the St. Louis metropolitan area than to the Illinois portion, that result would not provide a basis for EPA's denial of the governor's request. Moreover, EPA is setting the effective date for the opt in close to one year from receipt of the governor's request. Postponing the effective date for two months (i.e., to approximately one year from receipt of the request) would likely not affect any price differential that may exist, and would result in the loss of important and needed emissions reductions for the summer of 1999.

B. Comments on State Oxygen Content Standard

The commentor's second issue of concern is Missouri's interest in modifying or adopting a state regulation to increase the oxygenate content in RFG during the winter months for the five Missouri counties which have opted into the program. The commentor states that permitting Missouri to establish a 2.7% oxygenate requirement would essentially mandate the use of ethanol during the winter months. The commentor argues that this action would violate the Clean Air Act Amendments and also violates EPA's own stated policy regarding federal preemption and neutrality in oxygenate use.

Missouri's adoption of state fuel controls in addition to its opt-in to RFG is not relevant to establishing the effective date of the RFG program in St. Louis, which is the action being taken today. The agency does not have discretion under the Act to second guess the state's policy choice and deny the opt-in. Moreover, EPA has no authority to approve or disapprove a state fuel regulation if the state does not seek approval for the regulation through a section 211(c)(4)(C) waiver or ask that the regulation be approved into their state implementation plan. Therefore, the issue of whether the state decides to independently pursue an oxygenate requirement on top of the RFG program is not an issue in this rulemaking.

C. Comments on Regulatory Flexibility Analysis

Finally, the commentor questions EPA's decision not to prepare a regulatory flexibility analysis in connection with this rulemaking. The commentor argues that if RFG is introduced in the Missouri counties of the St. Louis MSA without an examination of the potential supply impact on surrounding ozone nonattainment areas and attainment counties, many small businesses, including independent gasoline marketers, will be adversely affected and gasoline prices will rise.

As noted in Section VI. B of this final rule, EPA has determined that its establishment of the effective date of May 1, 1999, for the St. Louis RFG opt in does not have a significant economic impact on a substantial number of small businesses. In promulgating the RFG and anti-dumping regulations, the Agency analyzed the impact of the regulations on small businesses. The Agency concluded that the regulations would not significantly affect small entities, such as gasoline blenders, terminal operators or service stations. *See* 59 FR 7810–7811 (February 16, 1994). Moreover, all businesses, large and small, maintain the option to produce conventional gasoline to be sold in areas not covered by the RFG program. In addition, EPA does not have discretion to deny the governor's opt in request, but simply to set an effective date as described in Section 211(k)(6). Therefore, the impact relevant for this action is the impact, if any, on small entities of setting the effective date of May 1, 1999, not the impact of the State's decision to opt into the RFG program.

The association commenting on this rulemaking challenged EPA's assertion in the NPRM that it is not necessary to prepare an additional regulatory flexibility analysis in connection with this rule. The association, which represents small independent gasoline marketers (retail outlets), argued that these small entities would experience a significant negative economic impact as a result of this proposed rule. They went on to say that if the EPA does not perform a more in-depth analysis of the gasoline supply consequences of the Missouri opt-in petition to assure that available supplies of all three St. Louis area fuels will be adequate, then the economic impact on a substantial number of small entities will be enormous.

In response to this comment with respect to EPA's responsibility under the Regulatory Flexibility Act, it is important to first outline the requirements to refiners, bulk terminal operators and small retailers under the RFG program.

Refiners carry the greatest level of burden when an area chooses to opt into the RFG program. Refiners must carry out a program of independent sample collection and analysis to establish the gasoline parameters reported to EPA. The independent lab must collect every sample. However, the refiner can have the lab test 100% of the samples or 10% of the samples and test the remainder themselves.

Refiners are also required to meet regulations for segregating RFG from conventional gasoline and other blendstocks which may require some additional tankage. Product transfer documents must accompany RFG batches to assure its compliance with EPA regulations. It is important to note that no refiners commented on this rulemaking. In fact, during the fuel summit the RFG option was highlighted for its ease of implementation (*See* Air Docket, A–98–39, II–D–03).

Bulk terminals have some oversight regulations including the maintenance of product transfer documents for up to five years. Bulk terminals are also responsible for segregation of RFG from conventional gasoline and other blendstocks. Bulk terminals are required to follow EPA regulations for the transition from winter time to summer time gasoline. As the presumptive liability is the same for refiners, terminal owners and retailers, some bulk terminals may choose to conduct their own quality assurance testing. No bulk terminal operators or owners commented on this final rule.

It remains EPA's position that compliance with the requirements of the RFG rule creates only minimal burdens for gasoline retailers. Retailers have no reporting requirements, although they are required to maintain product transfer documents for five years. Maintaining product transfer documents is a customary business practice as the same documents are maintained for relevant tax purposes. Unlike other parties, retailers have no quality assurance testing requirements. Among other things, retailers are required to ensure a smooth transition between winter time and summer time gasoline, however this requirement is also necessary under the requirements of EPA's volatility regulations so no modification to current practices is necessary. Retailers are also prohibited from commingling RFG containing Methyl Tertiary Butyl Ether (MTBE) with RFG containing ethanol. Retailers must also assure that conventional gasoline (CG) is not sold in an opt-in area. This can be achieved by carefully monitoring product transfer documents and refusing any gasoline which is labeled as conventional gasoline.

For the St. Louis area in particular, the Agency does not agree with the commentor's arguments regarding supply concerns and their effect on small entities. As described in Section III.A. of this notice, EPA has concluded that there will be sufficient supplies of RFG to meet the demand in St. Louis. Our most recent analysis indicates that the St. Louis area maintains a capacity to store 4.63 million barrels of product at five companies operating bulk terminal facilities in the St. Louis area.[2] Since the commentor's concern about small entity impacts is based on concerns about adequate supplies, EPA's conclusion that adequate supply does exist supports the Agency's finding that setting the effective date of May 1, 1999, for the St. Louis opt in does not have a significant impact on a substantial number of small entities. A complete analysis of the effect of the RFG/anti-dumping regulations on small businesses is contained in the Regulatory Flexibility Analysis which was prepared for the RFG and anti-dumping rulemaking, and can be found in the docket for that rulemaking (Docket No. A–92–12).

IV. Environmental Impact

The federal RFG program provides reductions in ozone-forming VOC emissions, air toxics, and starting in 2000, oxides of nitrogen (NO_X). Reductions in VOCs and NO_X are environmentally significant because they lead to reductions in ozone formation and in secondary formation of particulate matter, with the associated improvements in human health and welfare. Exposure to ground-level ozone (or smog) can cause respiratory problems, chest pain, and coughing and may worsen bronchitis, emphysema, and asthma. Studies suggest that long-term exposure (months to years) to ozone can damage lung tissue and may lead to chronic respiratory illness. Reductions in emissions of toxic air pollutants are environmentally important because they carry significant benefits for human health and welfare primarily by reducing the number of cancer cases each year.

Missouri's modeling estimates that once federal RFG is required to be sold in St. Louis, VOC emissions will be cut by an additional 5.53 tons/day over the VOC reductions from its current low volatility (RVP) gasoline requirement of 7.0 psi. In addition, all vehicles will have improved emissions and the area will also get reductions in toxic emissions.

V. Administrative Designation and Regulatory Analysis

A. Executive Order 12866

Under Executive Order 12866,[3] the Agency must determine whether a regulation is ''significant'' and therefore subject to OMB review and the requirements of the Executive Order. The Order defines ''significant regulatory action'' as one that is likely to result in a rule that may:

(1) Have an annual effect on the economy of $100 million or more, or adversely affect in a material way the economy, a sector of the economy, productivity, competition, jobs, the environment, public health or safety, or State, local or tribal governments of communities;

(2) Create a serious inconsistency or otherwise interfere with an action taken or planned by another agency;

(3) Materially alter the budgetary impact of entitlements, grants, user fees, or loan programs or the rights and obligations of recipients thereof, or

(4) Raise novel legal or policy issues arising out of legal mandates, the President's priorities, or the principles set forth in this Executive Order.[4]

It has been determined that this rule is not a ''significant regulatory action'' under the terms of Executive Order 12866 and is therefore not subject to OMB review.

B. Regulatory Flexibility

EPA has determined that it is not necessary to prepare a regulatory flexibility analysis in connection with this rule. EPA has also determined that this rule would not have a significant economic impact on a substantial number of small entities.

In promulgating the RFG and the related anti-dumping regulations, the Agency analyzed the impact of the regulations on small businesses. The Agency concluded that the regulations could have some economic effect on a substantial number of small refiners, but that the regulations would not significantly affect other small entities, such as gasoline blenders, terminal operators, service stations and ethanol blenders. *See* 59 FR 7810–7811 (February 16, 1994). A complete

[2] The Petroleum Terminal Encyclopedia, 1997, published by Oil Price Information Service

[3] *See* 58 FR 51735 (October 4, 1993).

[4] *Id.* at section 3(f)(1)–(4).

analysis of the effect of the RFG/anti-dumping regulations on small businesses is contained in the Regulatory Flexibility Analysis which was prepared for the RFG and anti-dumping rulemaking, and can be found in the docket for that rulemaking (Docket No. A–92–12).

Today's rule will affect only those refiners, importers or blenders of gasoline that choose to produce or import RFG for sale in the St. Louis ozone nonattainment area, and gasoline distributors and retail stations in those areas. EPA has determined that, because of their location, the vast majority of small refiners would be unaffected by the RFG requirements. Most small refiners are located in the mountain states or in California, which has its own RFG program, therefore, the vast majority of small refiners are unaffected by the federal RFG requirements finalized today.

Other small entities, such as gasoline distributors and retail stations located in St. Louis, which will become a covered area as a result of today's action, will be subject to the same requirements as those small entities which are located in current RFG covered areas. The St. Louis area is currently served by five companies operating bulk terminal facilities in the St. Louis area. EPA has not evaluated whether any of these companies would be considered small under the RFA. Nonetheless, given the minimal regulatory burdens and the small number of bulk terminal companies potentially subject to these RFG requirements, EPA believes today's action will not result in a significant impact on a substantial number of small bulk terminals. As for gasoline retailers, as stated earlier, EPA's position remains that the RFG rule creates only minimal burdens. The EPA believes that even in the aggregate (i.e., considering all impacts on all of the types of business potentially subject to regulation by today's action), approval of the St. Louis opt-in request will not result in a significant impact on a substantial number of small entities. Based on the foregoing information, EPA certifies that this final rule does not have a significant adverse impact on a substantial number of small entities.

C. Executive Order 12875: Enhancing Intergovernmental Partnerships

Under Executive Order 12875, EPA may not issue a regulation that is not required by statute and that creates a mandate upon a State, local or tribal government, unless the Federal government provides the funds necessary to pay the direct compliance costs incurred by those governments, or EPA consults with those governments. If EPA complies by consulting, Executive Order 12875 requires EPA to provide to the Office of Management and Budget a description of the extent of EPA's prior consultation with representatives of affected State, local and tribal governments, the nature of their concerns, copies of any written communications from the governments, and a statement supporting the need to issue the regulation. In addition, Executive Order 12875 requires EPA to develop an effective process permitting elected officials and other representatives of State, local and tribal governments ''to provide meaningful and timely input in the development of regulatory proposals containing significant unfunded mandates.''

Today's rule does not create a mandate on State, local or tribal governments. The rule does not impose any enforceable duties on these entities. Accordingly, the requirements of section 1(a) of Executive Order 12875 do not apply to this rule.

D. Executive Order 13084: Consultation and Coordination With Indian Tribal Governments

Under Executive Order 13084, EPA may not issue a regulation that is not required by statute, that significantly or uniquely affects the communities of Indian tribal governments, and that imposes substantial direct compliance costs on those communities, unless the Federal government provides the funds necessary to pay the direct compliance costs incurred by the tribal governments or EPA consults with those governments. If EPA complies by consulting, Executive Order 13084 requires EPA to provide the Office of Management and Budget, in a separately identified section of the preamble to the rule, a description of the extent of EPA's prior consultation with representatives of affected tribal governments, a summary of the nature of their concerns, and a statement supporting the need to issue the regulation. In addition, Executive Order 13084 requires EPA to develop an effective process permitting elected and other representatives of Indian tribal governments ''to provide meaningful and timely input in the development of regulatory policies on matters that significantly or uniquely affect their communities.''

Today's rule does not significantly or uniquely affect the communities of Indian tribal governments. Today's final rule does not create a mandate for any tribal governments. The rule does not impose any enforceable duties on these entities. Today's rule will affect only those refiners, importers or blenders of gasoline that choose to produce or import RFG for sale in the St. Louis ozone nonattainment area, and gasoline distributors and retail stations in those areas. Accordingly, the requirements of section 3(b) of Executive Order 13084 do not apply to this rule.

E. Unfunded Mandates

Under Section 202 of the Unfunded Mandates Reform Act of 1995 (''UMRA''), P.L. 104–4, EPA must prepare a budgetary impact statement to accompany any general notice of proposed rulemaking or final rule that includes a Federal mandate which may result in estimated costs to State, local, or tribal governments in the aggregate, or to the private sector, of $100 million or more in any one year. Under Section 205, for any rule subject to Section 202 EPA generally must select the least costly, most cost-effective, or least burdensome alternative that achieves the objectives of the rule and is consistent with statutory requirements. Under Section 203, before establishing any regulatory requirements that may significantly or uniquely affect small governments, EPA must take steps to inform and advise small governments of the requirements and enable them to provide input.

EPA has determined that today's rule does not trigger the requirements of UMRA. The rule does not include a Federal mandate that may result in estimated annual costs to State, local or tribal governments in the aggregate, or to the private sector, of $100 million or more, and it does not establish regulatory requirements that may significantly or uniquely affect small governments.

F. Paperwork Reduction Act

This action does not add any new requirements under the provisions of the Paperwork Reduction Act, 44 U.S.C. 3501 *et seq.* The Office of Management and Budget (OMB) has approved the information collection requirements that apply to the RFG/anti-dumping program, and has assigned OMB control number 2060–0277 (EPA ICR NO. 1591.10).

Burden means the total time, effort, or financial resources expended by persons to generate, maintain, retain, or disclose or provide information to or for a Federal agency. This includes the time needed to review instructions; develop, acquire, install, and utilize technology and systems for the purposes of collecting, validating, and verifying information, processing and maintaining information, and disclosing and providing information; adjust the existing ways to comply with any

previously applicable instructions and requirements; train personnel to be able to respond to a collection of information; search data sources; complete and review the collection of information; and transmit or otherwise disclose the information. An Agency may not conduct or sponsor, and a person is not required to respond to a collection of information unless it displays a currently valid OMB control number. The OMB control numbers for EPA's regulations are listed in 40 CFR Part 9 and 48 CFR Chapter 15.

G. Children's Health Protection

This rule is not subject to E.O. 13045, entitled ''Protection of Children from Environmental Health Risks and Safety Risks'' (62FR19885, April 23, 1997), because it does not involve decisions on environmental health risks or safety risks that may disproportionately affect children. This action will reduce Nox and VOC emissions which are precursors to ozone. This action will benefit children.

H. National Technology Transfer and Advancement Act of 1995 (NTTAA)

Section 12(d) of the National Technology Transfer and Advancement Act of 1995 (NTTAA), Pub L. No. 104–113, 12(d) (15 U.S.C. 272 note) directs EPA to use voluntary consensus standards in its regulatory activities unless to do so would be inconsistent with applicable law or otherwise impractical. Voluntary consensus standards are technical standards (e.g., materials specifications, test methods, sampling procedures, and business practices) that are developed or adopted by voluntary consensus standards bodies. The NTTAA directs EPA to provide Congress, through OMB, explanations when the Agency decides not to use available and applicable voluntary consensus standards.

This rulemaking does not involve technical standards. Therefore, EPA is not considering the use of any voluntary consensus standards.

I. Statutory Authority

The Statutory authority for the final action today is granted to EPA by sections 211(c) and (k) and 301 of the Clean Air Act, as amended; 42 U.S.C. 7545 (c) and (k) and 7601.

J. Judicial Review

Under section 307(b)(1) of the Clean Air Act, petitions for judicial review of this action to extend the federal RFG program to the St. Louis ozone nonattainment area must be filed in the United States Court of Appeals for the appropriate circuit by [date of Administrator's signature + 60 days]. Filing a petition for reconsideration by the Administrator of this final rule does not affect the finality of this rule for the purposes of judicial review nor does it extend the time within which a petition for judicial review my be filed, and shall not postpone the effectiveness of such rule or action. This action may not be challenged later in proceedings to enforce its requirements. (See section 307(b)(2)).

K. Submission to Congress

Under 5 U.S.C. 801(a)(1)(A) as added by the Small Business Regulatory Enforcement Fairness Act of 1996, EPA will submit a report containing this rule and other required information to the U.S. Senate, the U.S. House of Representatives and the Comptroller General of the General Accounting Office prior to publication of the rule in today's **Federal Register**. This rule is not a ''major rule'' as defined by 5 U.S.C. 804(2).

List of Subjects in 40 CFR Part 80

Environmental protection, Air pollution control, Fuel additives, Gasoline, Motor vehicle pollution.

Dated: February 25, 1999.

Carol M. Browner,

Administrator.

40 CFR part 80 is amended as follows:

PART 80—REGULATION OF FUELS AND FUEL ADDITIVES

1. The authority citation for part 80 is revised to read as follows:

Authority: Secs. 114, 211, and 301(a) of the Clean Air Act, as amended (42 U.S.C. 7414, 7545 and 7601(a)).

2. Section 80.70 is amended by adding paragraph (n) to read as follows:

§ 80.70 Covered areas.

* * * * *

(n) The prohibitions of section 211(k)(5) of the act will apply to all persons other than retailers and wholesale purchaser-consumers on May 1, 1999. The prohibitions of section 211(k)(5) of the act will apply to retailers and wholesale purchaser-consumers on June 1, 1999. As of the effective date for retailers and wholesale purchaser-consumers, the St. Louis, Missouri ozone nonattainment area is a covered area. The geographical extent of the covered area listed in this paragraph shall be the nonattainment boundaries for the St. Louis ozone nonattainment area as specified in 40 CFR 81.326.

[FR Doc. 99–5233 Filed 3–2–99; 8:45 am]

BILLING CODE 6560–50–P

federal register

Wednesday
March 3, 1999

Part V

Environmental Protection Agency

40 CFR Part 82

Protection of Stratospheric Ozone: Listing of Substitutes for Ozone-Depleting Substances; Final Rule

ENVIRONMENTAL PROTECTION AGENCY

40 CFR Part 82

[FRL–6237–5]

RIN: 2060–AG12

Protection of Stratospheric Ozone; Listing of Substitutes for Ozone-Depleting Substances

AGENCY: Environmental Protection Agency.

ACTION: Final rule.

SUMMARY: This action prohibits certain substitutes for ozone-depleting substances (ODSs) under the U.S. Environmental Protection Agency's (EPA) Significant New Alternatives Policy (SNAP) program. SNAP implements section 612 of the amended Clean Air Act of 1990, which requires EPA to evaluate substitutes for the ODSs to reduce overall risk to human health and the environment. Through these evaluations, SNAP generates lists of acceptable and unacceptable substitutes for each of the major industrial use sectors. The intended effect of the SNAP program is to expedite movement away from ozone depleting compounds while avoiding a shift into substitutes posing other environmental problems.

On March 18, 1994, EPA promulgated a final rulemaking setting forth its plan for administering the SNAP program, and issued decisions on the acceptability and unacceptability of a number of substitutes. In this final rule, EPA is issuing its decisions on the acceptability of certain substitutes not previously reviewed by the Agency. Specifically, this action lists as unacceptable the use of two gases as refrigerants in ''self-chilling cans'' because of unacceptably high greenhouse gas emissions which would result from the direct release of the cans' refrigerants to the atmosphere.

EFFECTIVE DATE: April 2, 1999. A public hearing will be held if requested in writing. If a public hearing is requested, EPA will provide notice of the date, time and location of the hearing in a subsequent **Federal Register** notice. For further information, please contact Kelly Davis at the address listed below under ''For Further Information.''

ADDRESSES: Written comments and data are available in Docket A–91–42, U.S. Environmental Protection Agency, OAR Docket and Information Center, 401 M Street, S.W., Room M–1500, Mail Code 6102, Washington, D.C. 20460. The docket may be inspected between 8 a.m. and 5:30 p.m. on weekdays. Telephone (202) 260–7548; fax (202) 260–4400. As provided in 40 CFR part 2, a reasonable fee may be charged for photocopying.

FOR FURTHER INFORMATION CONTACT: Kelly Davis at (202) 564–2303 or fax (202) 565–2096, Analysis and Review Branch, Stratospheric Protection Division, Mail Code 6205J, Washington, D.C. 20460. Overnight or courier deliveries should be sent to our 501 3rd Street, NW, Washington, DC 20001 location.

SUPPLEMENTARY INFORMATION: This action is divided into four sections:

I. Section 612 Program
A. Statutory Requirements
B. Regulatory History
II. Listing of Substitutes—Refrigeration and Air-Conditioning
III. Administrative Requirements
IV. Additional Information

I. Section 612 Program

A. Statutory Requirements

Section 612 of the Clean Air Act authorizes EPA to develop a program for evaluating alternatives to ozone-depleting substances. EPA is referring to this program as the Significant New Alternatives Policy (SNAP) program. The major provisions of section 612 are:

- *Rulemaking*—Section 612(c) requires EPA to promulgate rules making it unlawful to replace any class I (chlorofluorocarbon, halon, carbon tetrachloride, methyl chloroform, methyl bromide, and hydrobromofluorocarbon) or class II (hydrochlorofluorocarbon) substance with any substitute that the Administrator determines may present adverse effects to human health or the environment where the Administrator has identified an alternative that (1) reduces the overall risk to human health and the environment, and (2) is currently or potentially available.
- *Listing of Unacceptable/Acceptable Substitutes*—Section 612(c) also requires EPA to publish a list of the substitutes unacceptable for specific uses. EPA must publish a corresponding list of acceptable alternatives for specific uses.
- *Petition Process*—Section 612(d) grants the right to any person to petition EPA to add a substitute to or delete a substitute from the lists published in accordance with section 612(c). The Agency has 90 days to grant or deny a petition. Where the Agency grants the petition, EPA must publish the revised lists within an additional six months.
- *90-day Notification*—Section 612(e) requires EPA to require any person who produces a chemical substitute for a class I substance to notify the Agency not less than 90 days before new or existing chemicals are introduced into interstate commerce for significant new uses as substitutes for a class I substance. The producer must also provide the Agency with the producer's health and safety studies on such substitutes.
- *Outreach*—Section 612(b)(1) states that the Administrator shall seek to maximize the use of federal research facilities and resources to assist users of class I and II substances in identifying and developing alternatives to the use of such substances in key commercial applications.
- *Clearinghouse*—Section 612(b)(4) requires the Agency to set up a public clearinghouse of alternative chemicals, product substitutes, and alternative manufacturing processes that are available for products and manufacturing processes which use class I and II substances.

B. Regulatory History

On March 18, 1994, EPA published the Final Rulemaking (59 FR 13044) which described the process for administering the SNAP program and issued EPA's first acceptability lists for substitutes in the major industrial use sectors. These sectors include: refrigeration and air conditioning; foam blowing; solvent cleaning; fire suppression and explosion protection; sterilants; aerosols; adhesives, coatings and inks; and tobacco expansion. These sectors comprise the principal industrial sectors that historically consume large volumes of ozone-depleting compounds.

The Agency defines a ''substitute'' as any chemical, product substitute, or alternative manufacturing process, whether existing or new, that could replace a class I or class II substance. Anyone who produces a substitute must provide the Agency with health and safety studies on the substitute at least 90 days before introducing it into interstate commerce for significant new use as an alternative. This requirement applies to chemical manufacturers, but may include importers, formulators or end-users when they are responsible for introducing a substitute into commerce.

II. Listing of Substitutes—Refrigeration and Air-Conditioning

To develop the lists of unacceptable and acceptable substitutes, EPA conducts screens of health and environmental risks posed by various substitutes for ozone-depleting compounds in each use sector. The outcome of these risks screens can be found in the public docket, as described above in the **ADDRESSES** portion of this document.

Under section 612, the Agency has considerable discretion in the risk

management decisions it can make in SNAP. The Agency has identified five possible decision categories: acceptable; acceptable subject to use conditions; acceptable subject to narrowed use limits; unacceptable; and pending. Fully acceptable substitutes, i.e., those with no restrictions, can be used for all applications within the relevant sector end-use. Conversely, it is illegal to replace an ODS with a substitute listed by SNAP as unacceptable. A pending listing represents substitutes for which the Agency has not received complete data or has not completed its review of the data.

After reviewing a substitute, the Agency may make a determination that a substitute is acceptable only if certain conditions of use are met to minimize risks to human health and the environment. Such substitutes are placed on the acceptable subject to use conditions lists. Use of such substitutes in ways that are inconsistent with such use conditions renders these substitutes unacceptable.

Even though the Agency can restrict the use of a substitute based on the potential for adverse effects, it may be necessary to permit a narrowed range of use within a sector end-use because of the lack of alternatives for specialized applications. Users intending to adopt a substitute acceptable with narrowed use limits must ascertain that other acceptable alternatives are not technically feasible. Companies must document the results of their evaluation, and retain the results on file for the purpose of demonstrating compliance. This documentation shall include descriptions of substitutes examined and rejected, processes or products in which the substitute is needed, reason for rejection of other alternatives, e.g., performance, technical or safety standards, and the anticipated date other substitutes will be available and projected time for switching to other available substitutes. Use of such substitutes in applications and end-uses which are not specified as acceptable in the narrowed use limit renders these substitutes unacceptable.

In this final rule, EPA is issuing its decision on the acceptability of certain substitutes not previously reviewed by the Agency. Specifically, this final rule lists as unacceptable the use of two gases—HFC–134a and HFC–152a—as refrigerants in self-chilling cans because of unacceptably high greenhouse gas emissions that would result from the direct release of the cans' refrigerants to the atmosphere. Today's rule incorporates decisions proposed on May 21, 1997, at 62 FR 27873 and on February 3, 1998, at 63 FR 5491. As described in the final rule for the SNAP program (59 FR 13044), EPA believes that notice-and-comment rulemaking as a general matter is required to place any alternative on the list of prohibited substitutes, to list a substitute as acceptable only under certain use conditions or narrowed use limits, or to remove an alternative from either the list of prohibited or acceptable substitutes.

EPA does not believe that rulemaking procedures are required to list alternatives as acceptable with no limitations. Such listings do not impose any sanction, nor do they remove any prior license to use a substitute. Consequently, EPA adds substitutes to the list of acceptable alternatives without first requesting comment on new listings. Updates to the acceptable and pending lists are published as separate Notices of Acceptability in the **Federal Register**.

Part A below presents a detailed discussion of the substitute listing determinations by major use sector. Tables summarizing listing decisions in this **Federal Register** are in appendix G. The comments contained in appendix G to subpart G of 40 CFR part 82, provide additional information on a substitute. Since these comments are not part of the regulatory decision, they are not mandatory for use of a substitute. Nor should the comments be considered comprehensive with respect to other legal obligations pertaining to the use of the substitute. However, EPA encourages users of acceptable substitutes to apply all comments in their application of these substitutes. In many instances, the comments simply allude to sound operating practices that have already been identified in existing industry and/or building-code standards. Thus, many of the comments, if adopted, would not require significant changes in existing operating practices for the affected industry.

Refrigeration and Air-Conditioning

1. Listing Decisions

Self-chilling Cans Using HFC–134a or HFC–152a. *Self-chilling cans using HFC–134a or HFC–152a are unacceptable substitutes for CFC–12, R–502, and HCFC–22 in the following end-uses: household refrigeration, transport refrigeration, vending machines, cold storage warehouses, and retail food refrigeration, Retrofit and New.* This technology represents a product substitute intended to replace several types of refrigeration equipment. A self-chilling can includes a heat transfer unit that performs the same function as one half of the traditional vapor-compression refrigeration cycle. The unit contains a charge of pressurized refrigerant that is released to the atmosphere when the user activates the cooling unit. As the refrigerant's pressure drops to atmospheric pressure, it absorbs heat from the can's contents and evaporates, cooling the can. Because this process provides the same cooling effect as household refrigeration, transport refrigeration, vending machines, cold storage warehouses, or retail food refrigeration, it is a substitute for CFC–12, R–502, or HCFC–22 in these systems.

HFCs have played a major role in the phaseout of CFC refrigerants, and EPA expects this responsible use to continue. HFC–134a is an acceptable substitute for ozone-depleting refrigerants in a wide variety of refrigeration systems. In addition, both HFC–134a and HFC–152a are components in refrigerant blends that are themselves acceptable substitutes. These refrigeration systems, however, are closed, meaning that refrigerant recirculates, and there are EPA regulations requiring their recovery and reuse. The only source of refrigerant emissions from these systems is leaks, and EPA regulations require the repair of large leaks from these non-emissive systems. In contrast, however, self-chilling cans are by definition emissive, i.e., releasing refrigerant is integral to their function.

In assessing the risks of proposed substitutes under the SNAP program, EPA considers all environmental impacts that a substitute may produce. HFC–134a and HFC–152a have no ozone depletion potential, are low in toxicity, and are not volatile organic compounds. HFC–152a is mildly flammable, but the primary area of concern for both HFC–134a and HFC–152a is their potential to contribute to increased greenhouse gas emissions.

The proposal to this final rule described an assessment made by EPA of the possible contribution of self-chilling can technology to U.S. emissions of global warming gases when HFC–134a and HFC-152a are used. The proposed rule also describes an analysis of the effect of replacing systems with new equipment using new refrigerants in the end-uses listed above with self-chilling cans. As the analysis demonstrates, because the total U.S. market for beer and soft drinks is significant, even a small market penetration could substantially increase U.S. emissions of greenhouse gases. One scenario, a 5% market penetration of cans using HFC–134a, resulted in greenhouse gas emissions of 96 million metric tons of carbon equivalent (MMTCE), which would be 25% higher

than the 76 MMTCE of total expected reductions in greenhouse gas emissions currently estimated in the year 2000 under President Clinton's 1993 Climate Change Action Plan (CCAP). At 30% market penetration of cans using HFC–134a, emissions would be 575 MMTCE, more than total CO_2 emissions from all U.S. electric utilities' burning of fossil fuels. Interested parties can find more information about this analysis in the February 3, 1998 proposal to this final rule (63 FR 5491). For all of these reasons, EPA is listing self-chilling cans using HFC–134a or HFC–152a as unacceptable substitutes for CFC–12, R–502, or HCFC–22 in the end-uses listed above.

2. Response to Comments

Commenters identified three issues, discussed in turn:

- EPA does not have legislative authority to use concerns about high greenhouse gas emissions as a basis for the decision to list as unacceptable the use of HFC–134a and HFC–152a as refrigerants in self-chilling cans;
- EPA did not sufficiently consider differences between the global warming potentials of HFC–134a and HFC–152a, and a decision to list as unacceptable the use of HFC–152a as refrigerants in self-chilling cans may deter the use of HFC–152a in other unrelated applications; and
- The use of HFC–134a and HFC–152a in self-chilling cans may not be regulated under EPA's SNAP program because EPA never made a finding that self-chilling cans have used class I or II refrigerants.

a. EPA's Authority under Title VI of the Clean Air Act. Both commenters stated that EPA does not have authority to use concerns about high greenhouse gas emissions as a basis for the decision to list as unacceptable the use of HFC–134a and HFC–152a as refrigerants in self-chilling cans. In taking action on self-chilling cans, EPA is carrying out its responsibility under Title VI of the 1990 Clean Air Act, as part of the phaseout of chemicals that deplete the stratospheric ozone layer, to review the health and the environmental effects of replacement chemicals and products. Section 612(c) prohibits the introduction of any replacement that may present adverse effects to human health or the environment if EPA concludes there is an alternative available that ''reduces overall risk to human health and the environment.'' Section 608(c) also makes it illegal to knowingly vent or release a replacement refrigerant from a product into the air unless EPA determines that the release of the refrigerant ''does not pose a threat the environment.'' The Agency has included climate change among the environmental risks it considers in implementing section 612 since the inception of the SNAP program. The original SNAP rule promulgated in March, 1994 (59 FR 13044) included ''atmospheric effects and related health and environmental impacts'' as criteria for evaluating substitutes. Public comment on the original SNAP rule failed to identify any definition of overall risk that warranted excluding these effects.

b. Differences between HFC–134a and HFC–152a global warming potentials. The text of the preamble in the proposed rule distinguished between non-emissive uses of class I and II substitutes, such as in retail food refrigeration, and emissive uses, such as in self-chilling cans and aerosol propellants. One commenter stated that the preamble to the proposed rule should have further distinguished within the discussion of emissive uses between the use of HFC–134a and the use of HFC–152a, since HFC–134a has a global warming potential of 1300, and HFC–152a has a global warming potential of 140. The commenter expressed concern that a failure to make any distinction between these gases will deter the use of HFC–152a in emissive uses other than self-chilling cans, such as in personal care products.

In the course of evaluating class I and II substitutes under SNAP, the Agency does not consider the relative criteria of substitutes as they are used in different industrial sectors, or in different end-uses within a single sector. Instead, SNAP evaluation of a potential alternative involves comparing it with the original ODS it is substituting for *in that end-use*, and with other alternatives that are available in that end-use. Today's decision therefore has no bearing on the acceptability under SNAP of HFC–152a as a substitute under any other refrigeration and air-conditioning end-use or within any other industrial sector.

The commenter also stated that the impact of HFC–152a as a global warmer may not be sufficient to warrant direct regulation under SNAP. EPA disagrees; Section 612(c) of the Clean Air Act mandates that EPA shall make it unlawful to replace any class I or II substance with a substitute that EPA determines may present adverse effects to human health or the environment, if another alternative(s) to such replacement has been identified that: (a) reduces overall risk to human health and the environment; and (b) is currently or potentially available. There are, in fact, other substitutes within the refrigeration end-uses listed below that reduce overall risk to human health and the environment relative to the use of HFC–152a in self-chilling cans.

c. Class I or II refrigerants not present in self-chilling cans. One commenter believes that since a class I or II substance has never been used in self-chilling cans, EPA may not regulate the use of class I or II substitutes in self-chilling cans. The commenter stated that EPA lacks authority to regulate anything that does not involve direct replacement of a class I or II substance in a piece of equipment.

In essence, the commenter asserts that self-chilling cans are not subject to SNAP review because they are a different end-use from established refrigeration and air-conditioning end-uses that are subject to the SNAP program. EPA believes, however, that self-chilling cans are not a different end-use, but rather a substitute technological application within the refrigeration and air-conditioning end-uses subject to SNAP.

The original SNAP rule defines ''end-use'' as a process or class of specific applications within a major industrial sector where a substitute is used to replace an ozone-depleting substance. Within the refrigeration and air-conditioning sector, some of the end-uses that rely on ozone-depleting substances are CFC–12, R–502, and HCFC–22 household refrigeration, transport refrigeration, vending machines, cold storage warehouses, and retail food refrigeration. With respect to beverages, self-chilling cans perform the same function that the traditional equipment, processes and systems in these end-uses do: they make a chilled beverage available to the consumer. Therefore, self-chilling cans are a separate technological application intended to replace existing equipment used within these refrigeration and air-conditioning end-uses, rather than a completely different refrigeration and air-conditioning sector end-use.

Since the inception of the SNAP program, SNAP review has included evaluations not only of direct chemical replacements within a particular system or process, but also of product substitutes, process changes and alternative technologies such as the use of evaporative and absorption chillers in refrigeration and air conditioning, and the use of no-clean fluxes in electronics manufacturing processes that currently use class I or II compounds as cleaning and drying solvents.

As stated in the response to comments in the original March 18, 1994 SNAP rule, ''EPA believes it appropriate to consider substitute processes and products for review under the

SNAP program, since many of these alternatives are viable substitutes and could reduce overall risks to human health and the environment. EPA believes that such alternative products and processes, therefore, fall within the definition of substitutes under section 612'' (59 FR 13052).

Similarly, new production techniques and/or processing equipment are important developments that can minimize environmental risk. Accordingly, alternative manufacturing processes are also examined under section 612 in the context of use and emissions of substitutes. EPA believes that section 612's reference to ''alternative,'' instead of ''alternative substance,'' or ''alternative chemical,'' implies a statutory intent that ''alternative'' be read broadly. This reading of the statutory intent furthers the Congressional mandate to shift use to alternatives that reduce overall risk.

III. Administrative Requirements

A. Executive Order 12866

Under Executive Order 12866, (58 FR 51735; October 4, 1993) the Agency must determine whether the regulatory action is ''significant'' and therefore subject to OMB review and the requirements of the Executive Order. The Order defines ''significant regulatory action'' as one that is likely to result in a rule that may: (1) have an annual effect on the economy of $100 million or more or adversely affect in a material way the economy, a sector of the economy, productivity, competition, jobs, the environment, public health or safety, or State, local, or tribal governments or communities; (2) create a serious inconsistency or otherwise interfere with an action taken or planned by another agency; (3) materially alter the budgetary impact of entitlement, grants, user fees, or loan programs or the rights and obligations of recipients thereof; or (4) raise novel legal or policy issues arising out of legal mandates, the President's priorities, or the principles set forth in the Executive Order.

Pursuant to the terms of Executive Order 12866, OMB notified EPA that it considers this a ''significant regulatory action'' within the meaning of the Executive Order and EPA submitted this action to OMB for review. Changes made in response to OMB suggestions or recommendations have been documented in the public record.

B. Unfunded Mandates Act

Section 202 of the Unfunded Mandates Reform Act of 1995 requires EPA to prepare a budgetary impact statement before promulgating a rule that includes a Federal mandate that may result in expenditure by state, local, and tribal governments, in aggregate, or by the private sector, of $100 million or more in any one year. Section 203 requires the Agency to establish a plan for obtaining input from and informing any small governments that may be significantly or uniquely affected by the rule. Section 205 requires that regulatory alternatives be considered before promulgating a rule for which a budgetary impact statement is prepared. The Agency must select the least costly, most cost-effective, or least burdensome alternative that achieves the rule's objectives, unless there is an explanation why this alternative is not selected or this alternative is inconsistent with law.

Because this final rule is estimated to result in the expenditure by State, local, and tribal governments or the private sector of less than $100 million in any one year, the Agency has not prepared a budgetary impact statement or specifically addressed the selection of the least costly, most cost-effective, or least burdensome alternative. Because small governments will not be significantly or uniquely affected by this rule, the Agency is not required to develop a plan with regard to small governments.

C. Regulatory Flexibility

EPA has determined that it is not necessary to prepare a regulatory flexibility analysis in connection with this final rule. EPA has also determined that this final rule will not have a significant economic impact on a substantial number of small entities. The Agency is aware of only one entity that has expressed interest in manufacturing self-chilling cans, and that entity has informed EPA that it is pursuing manufacturing the cans using other refrigerants. Therefore, I certify that this action will not have a significant economic impact on a substantial number of small entities.

D. Paperwork Reduction Act

EPA has determined that this final rule contains no information requirements subject to the Paperwork Reduction Act, 44 U.S.C. 3501 *et seq.*, that are not already approved by the Office of Management and Budget (OMB). OMB has reviewed and approved two Information Collection Requests by EPA which are described in the March 18, 1994 rulemaking (59 FR 13044, 13121, 13146–13147) and in the October 16, 1996 rulemaking (61 FR 54030, 54038–54039). The OMB Control Numbers are 2060–0226 and 2060–0350.

E. Submission to Congress and the Comptroller General

The Congressional Review Act, 5 U.S.C. 801 *et seq.*, as added by the Small Business Regulatory Enforcement Fairness Act of 1996, generally provides that before a rule may take effect, the agency promulgating the rule must submit a rule report, which includes a copy of the rule, to each House of the Congress and to the Comptroller General of the United States. EPA will submit a report containing this rule and other required information to the U.S. Senate, the U.S. House of Representatives, and the Comptroller General of the United States prior to publication of the rule in the **Federal Register**. This rule is not a ''major rule'' as defined by 5 U.S.C. 804(2). This rule will be effective April 2, 1999.

F. Applicability of E.O. 13045: Children's Health Protection

This final rule is not subject to E.O. 13045, entitled Protection of Children from Environmental Health Risks and Safety Risks (62 FR 19885, April 23, 1997), because it does not involve decisions on environmental health risks or safety risks that may disproportionately affect children.

G. Executive Order 12875: Enhancing the Intergovernmental Partnership

Under Executive Order 12875, EPA may not issue a regulation that is not required by statute and that creates a mandate upon a State, local or tribal government, unless the Federal government provides the funds necessary to pay the direct compliance costs incurred by those governments, or EPA consults with those governments. If EPA complies by consulting, Executive Order 12875 requires EPA to provide to the Office of Management and Budget a description of the extent of EPA's prior consultation with representatives of affected State, local and tribal governments, the nature of their concerns, copies of any written communications from the governments, and a statement supporting the need to issue the regulation. In addition, Executive Order 12875 requires EPA to develop an effective process permitting elected officials and other representatives of State, local and tribal governments ''to provide meaningful and timely input in the development of regulatory proposals containing significant unfunded mandates.''

Today's rule does not create a mandate on State, local or tribal governments. The rule does not impose any enforceable duties on these entities. Accordingly, the requirements of

section 1(a) of Executive Order 12875 do not apply to this rule.

H. National Technology Transfer and Advancement Act

The National Technology Transfer and Advancement Act of 1995 (NTTAA), section 12(d), Public Law 104–113, requires federal agencies and departments to use technical standards that are developed or adopted by voluntary consensus standards bodies, using such technical standards as a means to carry out policy objectives or activities determined by the agencies and departments. If use of such technical standards is inconsistent with applicable law or otherwise impractical, a federal agency or department may elect to use technical standards that are not developed or adopted by voluntary consensus standards bodies if the head of the agency or department transmits to the Office of Management and Budget an explanation of the reasons for using such standards.

This final rule does not mandate the use of any technical standards; accordingly, the NTTAA does not apply to this rule.

I. Executive Order 13084: Consultation and Coordination With Indian Tribal Governments

Under Executive Order 13084, EPA may not issue a regulation that is not required by statute, that significantly or uniquely affects the communities of Indian tribal governments, and that imposes substantial direct compliance costs on those communities, unless the Federal government provides the funds necessary to pay the direct compliance costs incurred by the tribal governments, or EPA consults with those governments. If EPA complies by consulting, Executive Order 13084 requires EPA to provide to the Office of Management and Budget, in a separately identified section of the preamble to the rule, a description of the extent of EPA's prior consultation with representatives of affected tribal governments, a summary of the nature of their concerns, and a statement supporting the need to issue the regulation. In addition, Executive Order 13084 requires EPA to develop an effective process permitting elected officials and other representatives of Indian tribal governments ''to provide meaningful and timely input in the development of regulatory policies on matters that significantly or uniquely affect their communities.''

IV. Additional Information

For copies of the comprehensive SNAP lists or additional information on SNAP, contact the Stratospheric Protection Hotline at 1–800–296–1996, Monday-Friday, between the hours of 10:00 a.m. and 4:00 p.m. (EST).

For more information on the Agency's process for administering the SNAP program or criteria for evaluation of substitutes, refer to the SNAP final rulemaking published in the **Federal Register** on March 18, 1994 (59 FR 13044). Notices and rulemakings under the SNAP program, as well as EPA publications on protection of atmospheric ozone, are available from EPA's Ozone World Wide Web site at ''http://www.epa.gov/ozone/title6'' and from the Stratospheric Protection Hotline number as listed above.

List of Subjects in 40 CFR Part 82

Environmental protection, Administrative practice and procedure, Air pollution control, Reporting and recordkeeping requirements.

Dated: February 25, 1999

Carol M. Browner,

Administrator.

For the reasons set out in the preamble, 40 CFR part 82 is amended as follows:

PART 82—PROTECTION OF STRATOSPHERIC OZONE

1. The authority citation for Part 82 continues to read as follows:

Authority: 42 U.S.C. Sec. 7414, 7601, 7671–7671q.

2. Subpart G is amended by adding the following Appendix G to read as follows:

Subpart G—Significant New Alternatives Policy Program

* * * * *

Appendix G to Subpart G—Substitutes Subject to Use Restrictions and Unacceptable Substitutes Listed in the March 3, 1999, Final rule, Effective April 2, 1999.

REFRIGERANTS UNACCEPTABLE SUBSTITUTES

End-use	Substitute	Decision	Comments
CFC–12, R–502, and HCFC–22 Household Refrigeration, Transport Refrigeration, Vending Machines, Cold Storage Warehouses, and Retail Food Refrigeration, Retrofit and New.	Self-Chilling Cans-Using HFC–134a or HFC–152a.	Unacceptable ...	Unacceptably high greenhouse gas emissions from direct release of refrigerant to the atmosphere.

[FR Doc. 99–5237 Filed 3–2–99; 8:45 am]

BILLING CODE 6560–50–P

federal register

Wednesday
March 3, 1999

Part VI

The President

Proclamation 7169—Irish-American Heritage Month, 1999

Proclamation 7170—Women's History Month, 1999

Proclamation 7171—Save Your Vision Week, 1999

Federal Register
Vol. 64, No. 41
Wednesday, March 3, 1999

Presidential Documents

Title 3—

The President

Proclamation 7169 of March 1, 1999

Irish-American Heritage Month, 1999

By the President of the United States of America

A Proclamation

During the month of March each year, as millions of Americans celebrate St. Patrick's Day, we remember with special pride our Irish heritage. We remember our ancestors who stood on Ireland's western shores, yearning for the promise of America. Fleeing famine and injustice, they longed for a new world of opportunities. Millions of these courageous men and women set sail from Ireland, leaving behind all that they had ever known to seek the promise of America. They gave to their new homeland their strength and spirit, sinew and determination, eloquence and wit. In return, America offered them the opportunity for a better life, the chance to rise above poverty and discrimination, and a future where they could live out their dreams.

The Irish who came to America endured many hardships, but they prospered and helped to build our country with innumerable physical and intellectual contributions. They gave us Presidents like Woodrow Wilson, John Kennedy, and Ronald Reagan; patriots like John Barry and Stephen Moylan, who fought fiercely for American independence in the Revolutionary War; jurists like Justice William Brennan, who championed justice and equality; suffragists and social reformers like Maria McCreery; journalists, peacekeepers, artists, playwrights, labor leaders, and educators. These and so many other Irish Americans seized the opportunity of freedom America promised. From their grand literary tradition to their deep religious faith, Irish Americans and their descendants have enriched every facet of American history.

But Irish-American Heritage Month is a time to look to the future as well as to the past. Today we rejoice at the promise of peace in Northern Ireland and the resolve of her people to approach their differences not with weapons, but with words. While the path to peace is rarely easy, it is by necessity a community effort. Americans are a vital part of the process in Northern Ireland by virtue of our shared heritage and shared goal of lasting peace and a better future for all God's children. By lending our hearts, minds, and prayers to the work of peace, we can best fulfill our obligation to the generations of Irish men and women who have given so much to our Nation's life and history.

NOW, THEREFORE, I, WILLIAM J. CLINTON, President of the United States of America, by virtue of the authority vested in me by the Constitution and laws of the United States, do hereby proclaim March 1999 as Irish-American Heritage Month. I call upon all the people of the United States to observe this month with appropriate ceremonies, programs, and activities.

IN WITNESS WHEREOF, I have hereunto set my hand this first day of March, in the year of our Lord nineteen hundred and ninety-nine, and of the Independence of the United States of America the two hundred and twenty-third.

William J. Clinton

[FR Doc. 99–5462
Filed 3–2–99; 11:21 am]
Billing code 3195–01–P

Presidential Documents

Proclamation 7170 of March 1, 1999

Women's History Month, 1999

By the President of the United States of America

A Proclamation

A little more than a century ago, an editorial in the *Pittsburgh Dispatch* opposing women's suffrage and criticizing women in the work force so infuriated a young reader that she wrote a letter in protest. Her articulate response prompted the newspaper's editor to offer her a job, and thus Elizabeth Cochrane—later known as Nellie Bly—began her career in journalism. A pioneer of investigative reporting, she exposed the brutal conditions in the care of the mentally ill, reported on poor working conditions in factories, and wrote of the indignities suffered by women in prison. This year, as we reflect on America's past in preparation for our celebration of the new millennium, we recognize that the talent, energy, intellect, and determination of countless women like Nellie Bly have shaped our destiny and enriched our society since our earliest days as a Nation.

From the women who organized the East India Company tea boycotts before the Boston Tea Party to Deborah Sampson, who fought as a soldier in the Revolutionary War; from Angelina and Sarah Grimké, who spoke out against slavery to Harriet Tubman, who risked her life as a conductor on the Underground Railroad; from suffragist Carrie Chapman Catt to sharecropper Fannie Lou Hamer, who faced violence and endured intimidation to become a leader of the Civil Rights movement; from environmentalist Rachel Carson, who changed our way of looking at the world, to physicist Chien-Shiung Wu, who changed our way of looking at the universe, women's history is truly America's history. That is why I was pleased to establish in July of last year the President's Commission on the Celebration of Women in American History, whose recommendations will help us to better understand and rejoice to appreciate the role and accomplishments of women.

During Women's History Month, we honor the generations of women who have served our Nation as doctors and scientists, teachers and factory workers, soldiers and secretaries, athletes and mothers. We honor the women who have worked the land, cared for children and the elderly, nurtured families and businesses, served in charitable organizations and public office. And we remember the good friends we have so recently lost—women such as Bella Abzug, Marjory Stoneman Douglas, and Florence Griffith-Joyner—whose achievements and example continue to light our lives.

But we must do more than remember. We must build on the legacy of the millions of women, whether renowned or anonymous, who have contributed so much to the strength and character of our Nation. We must ensure that women have equal access to the education and opportunities they need to excel. We must guarantee that women receive equal pay in the workplace. We must promote policies and programs—including affordable, high-quality child care—that enable working women to succeed both on the job and in their homes. And we must work to ensure that women have the comfort of knowing they can retire in security. Women who have gone before us accomplished so much, often in the face of hardship and discrimination; we can only imagine what women will accomplish in the future if we break down the remaining barriers that prevent them from reaching their full potential.

NOW, THEREFORE, I, WILLIAM J. CLINTON, President of the United States of America, by virtue of the authority vested in me by the Constitution and laws of the United States, do hereby proclaim March 1999 as Women's History Month. I encourage all Americans to observe this month with appropriate programs, ceremonies, and activities, and to remember throughout the year the many heroic women whose many and varied contributions have enriched our lives.

IN WITNESS WHEREOF, I have hereunto set my hand this first day of March, in the year of our Lord nineteen hundred and ninety-nine, and of the Independence of the United States of America the two hundred and twenty-third.

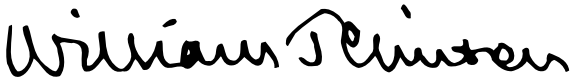

[FR Doc. 99–5463
Filed 3–2–99; 11:21 am]
Billing code 3195–01–P

Presidential Documents

Proclamation 7171 of March 1, 1999

Save Your Vision Week, 1999

By the President of the United States of America

A Proclamation

Vision is an extraordinary blessing—one that should be cherished and protected. Complex and remarkable organs, the eyes work in concert with the brain to produce vision, allowing us to experience the beauty and variety of the physical world around us.

Because blindness and vision loss are often avoidable, the maintenance of good vision must be a top health priority and an integral part of every American's overall health care routine. Preventative eye care is particularly important because there are often no warning signs or pain associated with many eye diseases, and, by the time vision loss is identified, it is frequently too late to undo the damage. Periodic dilated pupil eye examinations can reveal the early signs of eye disease and buy precious time for treatment.

It is equally important to protect our eyes from injury, another leading cause of vision loss. Each year, more than 2.4 million eye injuries occur in the United States. By using protective eyewear when working with machinery or chemicals, playing sports, or engaging in other recreational activities, we can help prevent irreparable loss of sight.

Taking measures to prevent vision loss in our children is especially important because their early development and academic achievement can suffer due to vision problems or diseases. Even before they begin school, children should undergo a complete eye examination so that poor vision or eye disorders can be appropriately treated.

As the 21st century fast approaches, our national investment in research to prevent, postpone, and treat eye diseases and disorders has produced substantial results. Laser technology, new medications, gene mapping, innovations in diagnostic techniques, and other sight-saving discoveries are improving the lives of millions of Americans. These advances in medical research, combined with preventative eye care and increased safety measures, can all work to preserve our gift of sight.

To remind our citizens of the importance of safeguarding their eyesight, the Congress, by join resolution approved December 30, 1963 (77 Stat. 629; 36 U.S.C. 169a), has authorized and requested the President to proclaim the first week in March of each year as ''Save Your Vision Week.''

NOW, THEREFORE, I, WILLIAM J. CLINTON, President of the United States of America, do hereby proclaim March 7 through March 13, 1999, as Save Your Vision Week. I urge all Americans to participate by making eye care and eye safety an important part of their lives and to ensure that dilated eye examinations are included in their regular health maintenance programs. I invite eye care professionals, the media, and all public and private organizations dedicated to preserving eyesight to join in activities that will raise awareness of the measures we can take to protect and sustain our vision.

IN WITNESS WHEREOF, I have hereunto set my hand this first day of March, in the year of our Lord nineteen hundred and ninety-nine, and of the Independence of the United States of America the two hundred and twenty-third.

William J. Clinton

[FR Doc. 99–5464
Filed 3–2–99; 11:21 am]
Billing code 3195–01–P

Reader Aids

Federal Register

Vol. 64, No. 41

Wednesday, March 3, 1999

CUSTOMER SERVICE AND INFORMATION

Federal Register/Code of Federal Regulations

General Information, indexes and other finding aids	**202–523–5227**
Laws	**523–5227**
Presidential Documents	
Executive orders and proclamations	**523–5227**
The United States Government Manual	**523–5227**
Other Services	
Electronic and on-line services (voice)	**523–4534**
Privacy Act Compilation	**523–3187**
Public Laws Update Service (numbers, dates, etc.)	**523–6641**
TTY for the deaf-and-hard-of-hearing	**523–5229**

ELECTRONIC RESEARCH

World Wide Web

Full text of the daily Federal Register, CFR and other publications:

http://www.access.gpo.gov/nara

Federal Register information and research tools, including Public Inspection List, indexes, and links to GPO Access:

http://www.nara.gov/fedreg

E-mail

PENS (Public Law Electronic Notification Service) is an E-mail service that delivers information about recently enacted Public Laws. To subscribe, send E-mail to

listproc@lucky.fed.gov

with the text message:

subscribe publaws-l <firstname> <lastname>

Use listproc@lucky.fed.gov only to subscribe or unsubscribe to PENS. We cannot respond to specific inquiries at that address.

Reference questions. Send questions and comments about the Federal Register system to:

info@fedreg.nara.gov

The Federal Register staff cannot interpret specific documents or regulations.

FEDERAL REGISTER PAGES AND DATES, MARCH

9905–10100 1
10101–10204 2
10205–10386 3

CFR PARTS AFFECTED DURING MARCH

At the end of each month, the Office of the Federal Register publishes separately a List of CFR Sections Affected (LSA), which lists parts and sections affected by documents published since the revision date of each title.

3 CFR

Proclamations:
7168 10101
7169 10379
7170 10383
7171 10385

Executive Orders:
12852 (Amended by EO 13114) 10099
13114 10099

5 CFR

532 ..... 9905, 9905

7 CFR

Proposed Rules:
1823 10235
1956 10235

12 CFR

3 10194
208 10194
225 10201
325 10194
567 10194

14 CFR

39 ..... 9906, 9908, 9910, 9911, 9912, 10205, 10208, 10209, 10211, 10213, 10216
97 ..... 9912, 9914

Proposed Rules:
39 ..... 9939, 10237
71 ..... 9940, 10238, 10239, 10241, 10242, 10243

16 CFR

Proposed Rules:
1213 10245
1500 10245
1513 10245

17 CFR

Proposed Rules:
240 9948

20 CFR

404 10103

21 CFR

520 10103
556 10103

24 CFR

3500 10080

26 CFR

1 10218
602 10218

Proposed Rules:
1 10262

28 CFR

Proposed Rules:
25 10262
549 10095

33 CFR

62 10104
117 10104

34 CFR

694 10184

39 CFR

20 ..... 9915, 10219

40 CFR

52 9916
60 10105
271 10111
80 10366
82 10374
180 ..... 10227, 10233

Proposed Rules:
Ch. 1 10066
52 ..... 9951, 9952, 10118, 10265, 10342
60 10119
97 10118
271 10121
372 9957
435 10266

43 CFR

Proposed Rules:
3800 9960

44 CFR

64 9919

Proposed Rules:
77 10181
80-83 10181
152 10181
200–222 10181
207 10181
301 10181
303 10181
306 10181
308 10181
320 10181
324 10181
325 10181
328 10181
333 10181
336 10181

45 CFR

60 9921

46 CFR

502 9922

545.....9922
571.....9922

47 CFR

73.....9923
Proposed Rules:
1.....9960
2.....10266
95.....10266

49 CFR

171.....9923
1000—1199 10234
Proposed Rules:
571.....9961

50 CFR

216.....9925
600.....9932
660.....9932
679.....9937
Proposed Rules:
216.....9965

REMINDERS

The items in this list were editorially compiled as an aid to Federal Register users. Inclusion or exclusion from this list has no legal significance.

RULES GOING INTO EFFECT MARCH 3, 1999

ENVIRONMENTAL PROTECTION AGENCY

Pesticides; tolerances in food, animal feeds, and raw agricultural commodities:

Dicamba (3,6-dichloro-o-anisic acid); correction; published 3-3-99

Pyriproxyfen; published 3-3-99

TRANSPORTATION DEPARTMENT

Coast Guard

Drawbridge operations:

New Jersey; published 2-1-99

TRANSPORTATION DEPARTMENT

Federal Aviation Administration

Airworthiness directives:

Agusta, S.p.A.; published 2-16-99

Empresa Brasileira de Aeronautica S.A.; published 1-27-99

Sikorsky; published 2-16-99

Class E airspace; correction; published 2-1-99

COMMENTS DUE NEXT WEEK

AGRICULTURE DEPARTMENT

Agricultural Marketing Service

Hazelnuts grown in—

Oregon and Washington; comments due by 3-15-99; published 1-14-99

AGRICULTURE DEPARTMENT

Animal and Plant Health Inspection Service

Livestock and poultry disease and control:

Pseudorabies in swine; payment of indemnity; comments due by 3-16-99; published 1-15-99

Plant-related quarantine, foreign:

Unmanufactured wood articles; solid wood packing material; comments due by 3-16-99; published 1-20-99

CONSUMER PRODUCT SAFETY COMMISSION

Poison prevention packaging:

Child-resistant packaging requirements—

Household products containing methacrylic acid; comments due by 3-15-99; published 12-30-98

DEFENSE DEPARTMENT

Acquisition regulations:

Para-aramid fibers and yarns; comments due by 3-16-99; published 1-15-99

Taxpayer identification numbers and commercial and government entity codes; comments due by 3-16-99; published 1-15-99

ENVIRONMENTAL PROTECTION AGENCY

Air pollutants, hazardous; national emission standards:

Ferroalloys production, etc.; comments due by 3-15-99; published 2-12-99

Air pollutants; hazardous; national emission standards:

Glycol ethers category; redefinition; comments due by 3-15-99; published 1-12-99

Air programs:

State program approvals and delegation of Federal authorities; comments due by 3-15-99; published 1-12-99

Air quality implementation plans; approval and promulgation; various States:

California; comments due by 3-15-99; published 2-11-99

Illinois; comments due by 3-19-99; published 2-17-99

New Jersey; comments due by 3-17-99; published 1-22-99

Water pollution; effluent guidelines for point source categories:

Centralized waste treatment facilities; comments due by 3-15-99; published 1-13-99

FEDERAL COMMUNICATIONS COMMISSION

Common carrier services:

Telecommunications Act of 1996; implementation—

Unauthorized changes of consumers' long distance carriers (slamming); subscriber carrier selection changes; comments due by 3-18-99; published 2-16-99

Radio stations; table of assignments:

New Hampshire; comments due by 3-15-99; published 2-4-99

New York; comments due by 3-15-99; published 2-4-99

North Dakota; comments due by 3-15-99; published 2-4-99

Oklahoma; comments due by 3-15-99; published 2-4-99

Vermont; comments due by 3-15-99; published 2-4-99

FEDERAL RESERVE SYSTEM

Availability of funds and collection of checks (Regulation CC):

Nonlocal check availability schedule; maximum time limit on hold shortened; comments due by 3-15-99; published 12-15-98

HOUSING AND URBAN DEVELOPMENT DEPARTMENT

Mortgage and loan insurance programs:

Single family mortgage insurance—

Informed consumer choice disclosure; comments due by 3-18-99; published 2-16-99

INTERIOR DEPARTMENT

Indian Affairs Bureau

Transportation Equity Act for 21st Century; implementation:

Indian Reservation Roads Negotiated Rulemaking Committee; membership; comments due by 3-15-99; published 2-11-99

INTERIOR DEPARTMENT

Fish and Wildlife Service

Endangered and threatened species:

Redband trout; comments due by 3-16-99; published 1-6-99

INTERIOR DEPARTMENT

Minerals Management Service

Royalty and offshore management programs; order appeals; comments due by 3-15-99; published 1-12-99

INTERIOR DEPARTMENT

Hearings and Appeals Office, Interior Department

Minerals Management Service; royalty and offshore management programs; order appeals; comments due by 3-15-99; published 1-12-99

INTERIOR DEPARTMENT

Surface Mining Reclamation and Enforcement Office

Permanent program and abandoned mine land reclamation plan submissions:

Texas; comments due by 3-15-99; published 2-12-99

LABOR DEPARTMENT

Nationwide employment statistics system; election process for State agency representatives for consultations with Labor Department; comments due by 3-18-99; published 12-18-98

NORTHEAST DAIRY COMPACT COMMISSION

Over-order price regulations:

Milk handlers; administrative assessment; comments due by 3-17-99; published 1-28-99

NUCLEAR REGULATORY COMMISSION

Biproduct material; domestic licensing:

Industrial devices containing byproduct material; information requirements; comments due by 3-16-99; published 12-2-98

SMALL BUSINESS ADMINISTRATION

Government contracting programs:

Contract bundling; comments due by 3-15-99; published 1-13-99

SOCIAL SECURITY ADMINISTRATION

Social security benefits and supplemental security income:

Federal old age, survivors and disability insurance and aged, blind, and disabled—

Substantial gainful activity amounts; average monthly earnings guidelines; comments due by 3-18-99; published 2-16-99

TRANSPORTATION DEPARTMENT

Federal Aviation Administration

Airworthiness directives:

Agusta S.p.A.; comments due by 3-19-99; published 2-17-99

Ayres Corp.; comments due by 3-15-99; published 1-13-99

Bell; comments due by 3-15-99; published 1-12-99

Boeing; comments due by 3-15-99; published 1-28-99

British Aerospace; comments due by 3-15-99; published 2-17-99

Industrie Aeronautiche e Meccaniche; comments due by 3-19-99; published 2-18-99

Robinson Helicopter Co.; comments due by 3-16-99; published 1-15-99

Sikorsky; comments due by 3-16-99; published 1-15-99

Class D and Class E airspace; comments due by 3-18-99; published 2-1-99

Class E airspace; comments due by 3-15-99; published 1-26-99

Federal airways; comments due by 3-15-99; published 1-25-99

TREASURY DEPARTMENT

Internal Revenue Service

Excise taxes:

Prepaid telephone cards; communications excise tax; comments due by 3-17-99; published 12-17-98

Income taxes and employment taxes and collection of income taxes at source:

Retirement plans; distributions notice and consent requirements; new technologies; comments due by 3-18-99; published 12-18-98

Income taxes:

Qualified retirement plans, etc.—

Relief from disqualification for plans accepting rollovers; comments due by 3-17-99; published 12-17-98

Procedure and administration:

Payment of internal revenue taxes by credit card and debit card; cross-reference; and payment by check or money order; comments due by 3-15-99; published 12-15-98

VETERANS AFFAIRS DEPARTMENT

Board of Veterans Appeals:

Appeals regulations and rules of practice—

Board decisions revised on grounds of clear and unmistakable error; representatives notification; comments due by 3-15-99; published 2-12-99