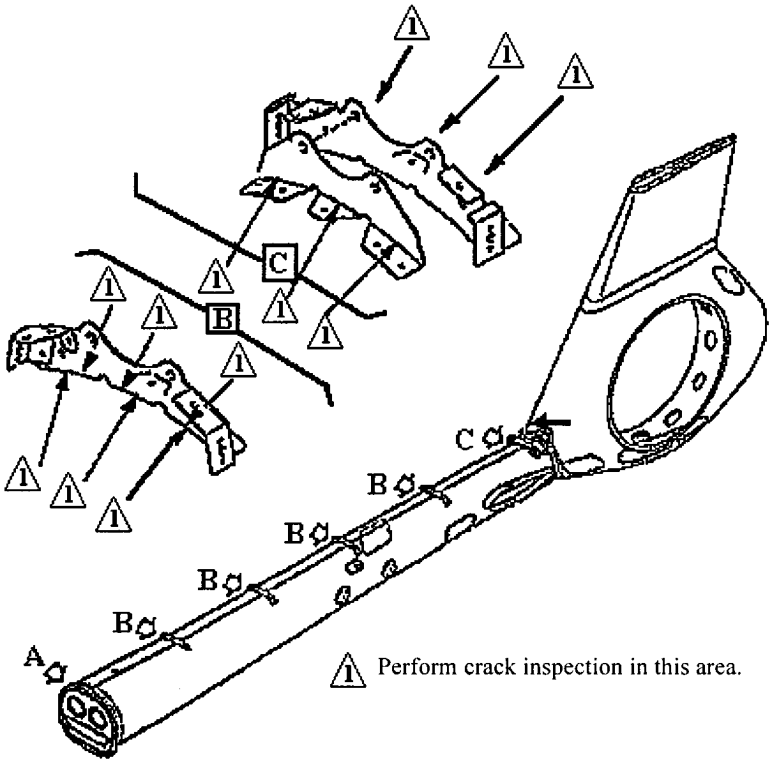

Figure 1

(c) Before further flight, and thereafter at intervals not to exceed 3 hours TIS, using a 6-power or higher magnifying glass and a bright light, visually inspect bearing supports B and C as shown in Figure 1, from the bend radius to the attaching screws and rivets connecting the bearing supports to the tailboom. If a crack is found, replace the bearing support with an airworthy bearing support.

(d) An alternative method of compliance or adjustment of the compliance time that provides an acceptable level of safety may be used if approved by the Manager, Rotorcraft Standards Staff, FAA. Operators shall submit their requests through an FAA Principal Maintenance Inspector, who may concur or comment and then send it to the Manager, Rotorcraft Standards Staff.

Note 3: Information concerning the existence of approved alternative methods of compliance with this AD, if any, may be obtained from the Rotorcraft Standards Staff.

(e) Special flight permits will not be issued.

(f) This amendment becomes effective on November 18, 1998, to all persons except those persons to whom it was made immediately effective by Priority Letter AD 98–15–25, issued July 17, 1998, which contained the requirements of this amendment.

Note 4: The subject of this AD is addressed in Luftfahrt-Bundesamt (Federal Republic of Germany) AD 1998–033/6, dated July 9, 1988.

Issued in Fort Worth, Texas, on October 27, 1998.

Eric Bries,

Acting Manager, Rotorcraft Directorate, Aircraft Certification Service.

[FR Doc. 98–29375 Filed 11–2–98; 8:45 am]

BILLING CODE 4910–13–P

SECURITIES AND EXCHANGE COMMISSION

17 CFR Part 240

[Release No. 34–40608; FR–53; File No. S7–7–98]

RIN 3235–AH36

Reports To Be Made by Certain Brokers and Dealers

AGENCY: Securities and Exchange Commission.

ACTION: Final rule.

SUMMARY: The Securities and Exchange Commission (''Commission'') is amending Rule 17a–5 under the Securities Exchange Act of 1934 (''Exchange Act'') to require certain broker-dealers to file with the Commission and their designated examining authorities (''DEA'') a report prepared by an independent public accountant regarding the broker-dealer's process for preparing for the Year 2000. The report will provide valuable information on the existence and sufficiency of a broker-dealer's process for addressing Year 2000 Problems; provide an independent verification of the accuracy of the information contained in the broker-dealer's second Form BD–Y2K; aid the Commission in obtaining a more complete understanding of the industry's overall Year 2000 preparations; and identify firm-specific and industry-wide problems. The independent public accountant's report will be available to the public.

EFFECTIVE DATE: January 4, 1999.

FOR FURTHER INFORMATION CONTACT: Michael A. Macchiaroli, Associate Director, 202/942–0131; Thomas K. McGowan, Assistant Director, 202/942–4886; Lester Shapiro, Senior Accountant, 202/942–0757; or Christopher M. Salter, Staff Attorney, 202/942–0148, Division of Market Regulation, Securities and Exchange Commission, 450 Fifth Street, NW, Mail Stop 10–1, Washington, DC 20549.

SUPPLEMENTARY INFORMATION:

I. Introduction

The Commission views the Year 2000 Problem [1] as a serious issue that if not

[1] The Commission has defined the term ''Year 2000 Problem'' to include any erroneous result

addressed could disrupt the proper functioning of many of the world's computer systems. At midnight on December 31, 1999, unless the proper modifications have been made, computer systems may start to produce erroneous results because, among other things, the systems may incorrectly read the date ''01/01/00'' as being the year 1900 or another incorrect date. In addition, systems may fail to detect that the Year 2000 is a leap year. Problems can also arise earlier than January 1, 2000, as dates in the next millennium are entered into non-Year 2000 compliant programs. Due to the serious nature of this issue, both the broker-dealer industry and the Commission are working hard to address the industry's Year 2000 Problems.

As part of its ongoing efforts relating to the Year 2000, on July 2, 1998, the Commission amended Rule 17a–5 [2] to require certain broker-dealers to file reports with the Commission and their DEAs regarding their efforts to address Year 2000 problems.[3] The amendments to Rule 17a–5 require each broker-dealer with a minimum net capital requirement of $5,000 or greater to file the new Form BD–Y2K. Part I of Form BD–Y2K is a check-the-box Year 2000 questionnaire. Each broker-dealer with a minimum net capital requirement of $100,000 or greater is also required to file Part II of Form BD–Y2K, which requires a narrative discussion of its efforts to address Year 2000 Problems. Form BD–Y2K is required to be filed no later than August 31, 1998, reflecting the broker-dealer's Year 2000 efforts as of July 15, 1998, and no later than April 30, 1999, reflecting the broker-dealer's Year 2000 efforts as of March 15, 1999.

In the Adopting Release, the Commission deferred consideration of its original proposal to require certain assertions by a broker-dealer regarding its process for addressing Year 2000 Problems be attested to or verified in some manner by an independent public accountant. In a Companion Release, also issued on July 2, 1998, the Commission solicited additional comments on the appropriate independent public accountant review, including comments on the feasibility and desirability of an agreed-upon procedures engagement in which an independent public accountant would follow certain established procedures as an independent check on a broker-dealer's assertions on the Form BD–Y2K.[4]

The Commission received 27 comment letters regarding either the appropriate scope of the independent public accountant review or the feasibility and desirability of an agreed-upon procedures engagement.[5] Twenty-two of the letters responded to the proposed attestation requirement with the majority of the commenters expressing concern about the scope and workability of an attestation review.[6] Five letters were received in response to the Commission's second solicitation of comments on the appropriate scope of the independent public accountant's review. The letters received in response to the second solicitation were generally opposed to any additional reporting or regulatory requirements. However, a number of the commenters indicated that an agreed-upon procedures approach mitigated some of their concerns regarding the proposed attestation review requirement. After considering the comments received, the Commission is adopting the proposed amendments regarding engagement of an independent public accountant with the changes discussed below.

II. Description of the Proposed Rule Amendments

Under the Commission's original proposal, a broker-dealer with a minimum net capital requirement of $100,000 or greater would have been required to make certain specific assertions as part of its second Year 2000 report regarding its efforts to address Year 2000 Problems.[7] In addition to making the assertions, the broker-dealer would have been required to engage an independent public accountant to attest to whether there was a reasonable basis for these assertions.

III. Discussion of Final Rule Amendments

A. Independent Public Accountant Review

The American Institute of Certified Public Accountants (''AICPA''), among other commenters, stated that the proposed attestation report would be difficult for independent public accountants to provide. The AICPA said that some of the required broker-dealer assertions are not appropriate for accountant attestation because the assertions are not capable of reasonably consistent measurement against reasonable criteria. Currently, there are no uniform, well established criteria related to Year 2000 remediation efforts. The lack of established criteria would likely result in significant variation in the examination procedures performed by independent public accountants and thus would reduce the usefulness of the attestation reports. In addition, the AICPA expressed concern that the purpose and conclusions of the attestation report could be misunderstood. The AICPA was primarily concerned that uninformed users of the attestation reports would place undue reliance on them. Several other commenters also expressed concern that independent public accountants probably do not have the expertise required to properly evaluate the broker-dealer's Year 2000 efforts and that requiring an attestation engagement would be burdensome.

The Commission believes that requiring a broker-dealer to file a report prepared by an independent public accountant will benefit the Commission's and the securities industry's efforts to prepare for the Year 2000 by improving the accuracy of the broker-dealer's second Year 2000 report and by encouraging the broker-dealer to proceed expeditiously with its efforts to address Year 2000 Problems. The information will help the Commission to have a more complete understanding of the industry's overall Year 2000 preparations and to identify firm-specific and industry-wide problems. Information in the reports will also help

caused by any computer software: (1) Incorrectly reading the date ''01/01/00'' or any year thereafter; (ii) incorrectly identifying a date in the year 1999 or any year thereafter; (iii) failing to detect that the Year 2000 is a leap year, and (iv) any other computer error that is directly or indirectly related to (i), (ii), or (iii) above.

[2] 17 CFR 240.17a–5.

[3] Release No. 34–40162 (July 2, 1998), 63 FR 37668 (July 13, 1998) (''Adopting Release'').

[4] Release No. 34–40164 (July 2, 1998), 63 FR 37709 (July 13, 1998) (''Companion Release'').

[5] All comment letters are available in File No. S7–7–98 at the Commission's Public Reference Room, 450 Fifth Street, NW, Washington, DC 20549. The comment period closed on April 27, 1998. *See also* Release No. 34–39858 (extending the comment period from April 13, 1998 to April 27, 1998) *See also* Release No. 34–40164 (reopening the comment period on the appropriate scope of independent public accountant review until August 12, 1998).

[6] Release Nos. 34–39724; IC–23059; IA–1704 (March 5, 1998), 63 FR 12056 (March 12, 1998) (''Proposing Relase'').

[7] Each broker-dealer would have been required to assert: (1) Whether it has developed written plans for preparing and testing its computer systems for potential Year 2000 Problems; (2) whether the board of directors, or similar body, has approved these plans, and whether a member of the broker-dealer's board of directors, or similar body, is responsible for executing the plans' (3) whether its Year 2000 remediation plans address all domestic and international operations, including the activities of its subsidiaries, affiliates, and divisions; (4) whether it has assigned existing employees, hired new employees, or engaged third parties to execute its Year 2000 remediation plans; and (5) whether it has conducted internal and external testing of its Year 2000 solutions and whether the results of those tests indicate that the broker-dealer has modified its software to correct Year 200 problems. Many of the issues covered by the assertions were adopted as questions in Part II of Form BD–Y2K.

the Commission focus its Year 2000-related efforts for 1999 on particular industry segments or firms that appear to pose the greatest risk of not being ready for the Year 2000. In sum, the rule amendments will enable the Commission to take a more active role in reducing the Year 2000 risk to the securities industry.

However, the Commission has modified the scope of the independent public accountant review. The rule adopted today requires each broker-dealer that is required to file Part II of Form BD–Y2K by April 30, 1999, to include with that filing a report prepared by an independent public accountant regarding the broker-dealer's process for addressing Year 2000 Problems. The independent public accountant's report must be prepared in accordance with standards that have been reviewed by the Commission and that have been issued by a national organization that is responsible for promulgating authoritative accounting and auditing standards. Such standards do not have to involve an attestation engagement, as the Commission originally proposed.

In conjunction with adopting the independent public accountant reporting requirement, the Commission has reviewed the procedures included in the Statement of Position 98–8, issued by the Auditing Standards Board.[8] An independent public accountant's report prepared in accordance with SOP 98–8 would satisfy the independent public accountant reporting requirements adopted by the Commission today.[9] Statement of Position 98–8 is discussed in more detail in part III. B below.

B. Statement of Position 98–8

The AICPA, along with other commenters, suggested that an ''agreed-upon procedures'' engagement, instead of an attestation engagement, would more effectively meet the Commission's objectives. Pursuant to such an engagement, a broker-dealer would engage an independent public accountant to perform and report on specific procedures designed to meet the Commission's objectives. This would eliminate the variability of examination procedures performed by independent public accountants and increase the consistency of the reports received by the Commission. In addition, other commenters indicated that an agreed-upon procedures engagement would be less time-consuming, less costly, and less disruptive operationally than the attestation approach.

SOP 98–8 addresses commenters' concerns regarding an attestation engagement by providing independent public accountants a list of procedures to follow when preparing its report on the broker-dealer's process for addressing Year 2000 Problems. More specifically, these procedures require an independent public accountant to consider the broker-dealer's plan for addressing Year 2000 Problems, its efforts to repair its affected computer systems, its tests of completed repairs, and its efforts to monitor the progress of the Year 2000 project. In addition, through SOP 98–8 the independent public accountant is provided a reporting format to use when reporting the results of executing the specified procedures. Finally, SOP 98–8 provides the independent public accountant with guidance on how to execute the procedures and how to report any exceptions identified.

The Commission believes that the procedures and reporting format contained in SOP 98–8 and the execution of the procedures by an independent public accountant (i) will provide valuable information on the existence and sufficiency of a broker-dealer's process for addressing Year 2000 Problems; (ii) will provide an independent verification of the accuracy of the information contained in the broker-dealer's second Form BD–Y2K; (iii) will aid the Commission in obtaining a more complete understanding of the industry's overall Year 2000 preparations; and (iv) will identify firm-specific and industry-wide problems.

C. Public Availability

The proposed rules would have made the independent public accountant's attestation report available to the public. The AICPA, in addition to other commenters, expressed concerns that some users of these reports could place undue reliance on the reports and that the technical nature of the reports could confuse investors. However, the Commission believes that the public's interest is best served by requiring full and open disclosure. Allowing the public, particularly other broker-dealers and counterparties, to have access to the independent public accountant's report will assist interested persons in determining whether a broker-dealer has a process for addressing Year 2000 Problems. For example, after reviewing an accountant's report regarding a counterparty, another broker-dealer might request additional information or assurances if the counterparty does not appear to be taking the steps necessary to be Year 2000 compliant. In the absence of such assurances, the other broker-dealer could determine whether it wishes to continue its dealings with that counterparty.

The rule amendments adopted by the Commission today provide that the public will have access to the independent public accountant's report.[10] In addition, the Commission or its staff, after reviewing Forms BD–Y2K, accompanying accountant's reports, and other pertinent information, may make findings or conclusions or compile information from filings by individual firms and make firm-specific, aggregate, or derivative information available to the public, Congress, or other members of the securities industry. The Commission notes, however, that the accountant's report has a specific regulatory purpose and is not intended to express an opinion or finding regarding whether a broker-dealer is Y2K compliant. The following excerpts from the sample ''Independent Accountant's Report on Applying Agreed-Upon Procedures'' attached to the AICPA's SOP makes clear the limitations of the accountant's role and report:

> We have performed the procedures enumerated below as specified in the American Institute of Certified Public Accountants' (AICPA's) Statement of Position 98–8, which were agreed to by ABC Broker-Dealer (hereinafter referred to as the entity) to assist the users in evaluating the entity's assertions in Parts I and II of Form BD–Y2K (Form BD–Y2K) as of March 15, 1999, prepared and filed pursuant to the requirements of SEC rule 17a–5. Pursuant to Securities and Exchange Commission (SEC) Release No. 34–40608 these agreed-upon procedures will satisfy the SEC's regulatory requirements. This report is issued solely for these regulatory purposes.

[8] The AICPA's Auditing Standards Board is responsible for the promulgation of auditing and attestation standards and procedures to be observed by members of the AICPA in accordance with the Institute's Bylaws and Code of Professional Conduct.

[9] Parties wishing to have the Commission review standards for the preparation of the independent public accountant's report should submit the standards to the Commission's Secretary at its principal office in Washington, DC. In reviewing SOP 98–8, the Commission considered whether it required the independent public accountant to consider the broker-dealer's plan for addressing Year 2000 problems, its efforts to repair affected computer systems, tests of completed repairs, and its efforts to monitor the progress of the broker-dealer's Year 2000 project.

[10] An agreed-upon procedures engagement conducted in accordance with SOP 98–8 must also comply with SSAE No. 4, *Agreed-Upon Procedures Engagements. See* AICPA, Professional Standards, Vol. 1, AT Sec. 600. SSAE No. 4 states, among other things, that a report on the performance of agreed-upon procedures should restrict the use of the report to parties specifically identified as users within the report. However, SSAE No. 4 does not limit who may have access to the report.

This agreed-upon procedures engagement was performed in accordance with standards established by the AICPA. The sufficiency of these procedures is solely the responsibility of the specified users of the report. Consequently, we make no representation regarding the sufficiency of the procedures described below either for the purpose for which this report has been requested or for any other purpose.

We were not engaged to, and did not, perform an examination, the objective of which would be the expression of an opinion on the entity's assertions included in Form BD–Y2K referred to in the introductory paragraph of this report. Accordingly, we do not express such an opinion. Had we performed additional procedures, other matters might have come to our attention that would have been reported to you. Our procedures also do not provide assurance that the entity is or will be year 2000 ready, that its year 2000 project plans will be successful in whole or in part, or that parties with which the entity does business will be year 2000 ready.

This report is intended solely for the information and use of the Board of Directors and Management of ABC Broker-Dealer, the Securities and Exchange Commission, and ABC Broker-Dealer's designated self-regulatory organization and is not intended to be and should not be used by anyone other than these specified parties.

D. Timing

The amendments to Rule 17a–5 adopted by the Commission in July 1998 require a broker-dealer to file its second Year 2000 report with the Commission and the broker-dealer's DEA by April 30, 1999, without regard to when its fiscal year ended.[11] The rule adopted today also requires the broker-dealer to file the report prepared by the independent public accountant by April 30, 1999, reflecting the broker-dealer's Year 2000 efforts as of March 15, 1999.

IV. Costs and Benefits

In the Proposing Release, the Commission requested that commenters provide analysis and data supporting the costs and benefits of the proposed amendments. In a second release soliciting additional comments on the appropriate scope of the independent public accountant's review, the Commission solicited comments on the desirability and feasibility of an agreed-upon procedures approach. Several commenters indicated that the Commission's cost estimates with regard to the attestation report were too low. However, no commenters provided detailed information or data as to the costs of the proposed amendments.

As discussed more fully in part III.A. above, the Commission is adopting a requirement that certain broker-dealers file with their second Form BD–Y2K a report prepared by an independent public accountant regarding the broker-dealer's process for addressing Year 2000 Problems. In addition, the Commission has determined that an independent public accountant's report prepared in accordance with SOP 98–8 will meet its regulatory objectives. It is important to note that the independent public accountant review adopted by the Commission today is significantly less in scope than the proposed attestation review. As a result, the aggregate cost of complying with the rule should be less.

In the Proposing Release, the Commission estimated that on average a broker-dealer would spend 20 hours working with its independent public accountant and that the cost of the attestation report could range from $5,000 to $200,000 with the average cost likely to be $25,000. Without providing cost figures or analysis, commenters indicated that these estimated costs were too low. Consequently, Commission staff contacted a number of accounting firms and the AICPA to obtain detailed data on the costs to broker-dealers of the independent public accountant's report. However, the parties contacted would not formally submit cost data.

Therefore, despite the reduced scope of the independent public accountant review adopted by the Commission today and based on the comments received and the efforts of its staff, the Commission is retaining its original cost estimates. The Commission estimates that the total cost to the industry of broker-dealers obtaining and filing the independent public accountant's reports is $66,150,000. This is based on 2,450 respondents spending on average 20 hours at $100 per hour working with their accountants and spending on average $25,000 in additional accounting fees. It is important to note that this is a total cost estimate and not an annual cost. Broker-dealers will only be required to file one independent public accountant's report. The Commission further notes that by limiting the requirement to those broker-dealers who pose the greatest risk to customers and the market if they are not Year 2000 compliant, the Commission has not imposed this burden on approximately 88% of small broker-dealers. For more information on the amendments effect on small broker-dealers see part VI below.

No commenters specifically addressed the potential benefits of the amendments, and the Commission has not been able to quantify those benefits.[12] The Commission is aware of the significant effort the securities industry has put forth and the progress it has made but believes that significant progress still needs to be made by the securities industry to be ready for the Year 2000.

As previously discussed in part III. A above, the Commission believes that a regulatory requirement to file an independent public accountant's report will improve the accuracy of the broker-dealer's second Year 2000 report and should encourage the broker-dealer to proceed expeditiously with its efforts to prepare for the Year 2000. The Commission will use the reported information to obtain a more complete understanding of the industry's overall Year 2000 preparations and to identify firm-specific and industry-wide problems. Information in the reports will help the Commission focus its Year 2000-related efforts for 1999 on particular industry segments or firms that appear to pose the greatest risk of non-compliance and will enable the Commission to take a more active role in reducing the Year 2000 risk to the securities industry. In light of the seriousness and pervasiveness of the Year 2000 Problem and in light of the systemic risk it presents to the securities industry and investors, the Commission believes the significant benefits that will result from the independent public accountant's report justify the costs.

V. Efficiency, Competition, and Capital Formation

Section 23(a) of the Exchange Act[13] requires the Commission, in adopting rules under the Exchange Act, to consider the impact any such rule would have on competition and to not adopt a rule that would impose a burden on competition not necessary or appropriate in furthering the purposes of the Exchange Act. Furthermore, section 3(f) of the Exchange Act[14] provides that whenever the Commission is engaged in rulemaking and is required to consider or determine whether an action is necessary or appropriate in the public interest, the Commission also shall consider, in addition to the protection of investors, whether the action will promote efficiency, competition, and capital formation. The Commission has

[11] The second Year 2000 report is required to reflect a broker-dealer's Year 2000 efforts as of March 15, 1999. *See* Adopting Release, 63 FR 37709 (July 13, 1998).

[12] One commenter expressed concern that the cost of obtaining the independent public accountant's report would outweigh its benefits. However, the commenter did not provide any specific information or analysis.

[13] 15 U.S.C. 78w (a)(2).

[14] 15 U.S.C. 78c.

considered the amendments to Rule 17a–5 in light of the standards cited in sections 3 and 23 (a)(2) of the Exchange Act. In addition, the Commission sought comments on the proposed amendments' effect on competition, efficiency, and capital formation. No commenters specifically addressed the issue of whether the proposed accountant's review would affect competition and no comments were received regarding the proposed amendment's effect on efficiency and capital formation.

In the Proposing Release, the Commission stated that the proposed amendments should not unduly burden competition. The Commission has drafted the rule amendments so as to minimize their impact on competition. The Commission has, in adopting the independent public accountant's reporting requirement, differentiated between broker-dealers based upon their size, type of business, and relative risk they pose to customers and the market if they are not Year 2000 compliant. Broker-dealers that do not meet the $100,000 minimum net capital reporting threshold are not required to file the accountant's report.[15] The Commission believes that the proposed amendments do not impose any burden on competition not necessary or appropriate in furtherance of the Exchange Act.

The Commission believes that the amendments should increase the efficiency and effectiveness of the Commission's efforts to prepare for the Year 2000 by enabling the Commission to obtain a more complete understanding of the industry's overall Year 2000 preparations and to identify firm-specific and industry-wide problems. Information in the reports will also help the Commission focus its Year 2000-related efforts for 1999 on particular industry segments or firms that appear to pose the greatest risk of non-compliance. In addition, the Commission believes that the amendments do not adversely affect capital formation. However, failure on the part of the Commission and the securities industry to adequately prepare for the Year 2000 could adversely affect capital formation at the beginning of the next millennium.

[15] Generally, the type of business conducted by a broker-dealer who is required to maintain minimum net capital of $100,000 or greater poses a greater risk to customers and the markets if the broker-dealer is not Year 2000 compliant than a broker-dealer conducting a more limited securities business.

VI. Summary of Final Regulatory Flexibility Analysis

A final Regulatory Flexibility Analysis (''FRFA'') concerning the amendments to Rule 17a–5 has been prepared in accordance with the provisions of the Regulatory Flexibility Act (''RFA''), as amended by Public Law No. 104–121, 110 Stat. 847, 864 (1996), 5 U.S.C. 604. The FRFA notes that the amendments to Rule 17a–5 will require broker-dealers to file with their second Form BD–Y2K a report prepared by an independent public accountant regarding the broker-dealer's process for addressing Year 2000 Problems.

The Commission received no comments on the Initial Regulatory Flexibility Analysis (''IRFA'') prepared in connection with the Proposing Release, and no comment letters specifically addressed the IRFA. However, certain commenters expressed concern about the estimated costs associated with obtaining the independent public accountant's attestation.

As discussed more fully in the FRFA, the rule will affect small entities. When used with reference to a broker or dealer, the Commission has defined the term ''small entity'' to mean a broker or dealer (''small broker-dealer'') that: (1) Had total capital (net worth plus subordinated liabilities) of less than $500,000 on the date in the prior fiscal year as of which its audited financial statements were prepared pursuant to section 240.17a–5(d) or, if not required to file such statements, a broker or dealer that had total capital (net worth plus subordinated liabilities) of less than $500,000 on the last business day of the preceding fiscal year (or in the time that it has been in business, if shorter); and (2) is not affiliated with any person (other than a natural person) that is not a small business or small organization as defined in this release.[16]

The Commission has drafted the rule amendments so as to minimize their impact on small broker-dealers while enhancing investor protection and minimizing any impact on competition by excluding those broker-dealers who do not pose the greatest risk to customers and the market. The rule amendments require broker-dealers with a minimum net capital requirement of $100,000 or greater to file a report prepared by an independent public accountant regarding the broker-dealer's process for addressing Year 2000 Problems. The type of business conducted by a broker-dealer who is required to maintain minimum net capital of $100,000 or greater generally poses a greater risk to customers and the markets if the broker-dealer is not Year 2000 compliant than a broker-dealer conducting a more limited securities business.

Based on FOCUS data for the fourth quarter of 1997, the latest information available, the Commission estimates that there are approximately 5,200 small broker-dealers. Of these 5,200 small broker-dealers, approximately 600 are affected by the amendments to Rule 17a–5. As noted in the cost-benefit section above, the Commission estimates that each of the affected broker-dealers will spend approximately 20 hours providing information to and assisting their independent public accountant review the broker-dealers process for addressing Year 2000 Problems. In addition, each affected small broker-dealer will incur $25,000 in additional accounting fees.

Thus, by limiting the requirement to file an independent public accountant's report to those broker-dealers who have a minimum net capital requirement of $100,000 or greater, the Commission has imposed no burden on approximately 4,600 (88%) small broker-dealers.

The FRFA notes that it would be difficult to further simplify, consolidate, or adjust compliance standards for small broker-dealers and be able to effectively monitor the securities industry's efforts to prepare for the Year 2000. The Commission believes that exempting those broker-dealers who do not pose the greatest risk to customers and the markets if they are not Year 2000 compliant strikes the appropriate balance between the need to protect investors and the need to minimize the impact on small broker-dealers. The Commission also considered the use of performance rather than design standards. However, the Commission concluded that it would be inconsistent with the purpose of the rule to use performance standards to specify different requirements for small entities.

A copy of the FRFA may be obtained by contacting Christopher M. Salter, Staff Attorney, U.S. Securities and Exchange Commission, Mail Stop 10–1, 450 Fifth Street, NW., Washington, DC 20549.

[16] 17 CFR 240.0–10(c). The Commission recently amended its small business definition for broker-dealers. *See* 63 FR 35508 (June 30, 1998). Because the IRFA for this proposal relied on the old definition (which is broader), the FRFA also relies on the old definition.

VII. Paperwork Reduction Act

The amendments to Rule 17a–5 adopted by the Commission today also amended the following collection of information within the meaning of the Paperwork Reduction Act of 1995

(''PRA''):[17] Reports to be Made by Certain Brokers and Dealers; Rule 17a–5(e)(5)—Year 2000 Problem.[18] Accordingly, the amendment to the collection of information requirement regarding the accountant's report was submitted to the Office of Management and Budget (''OMB'') for review and was approved by OMB which assigned the following control number 3235–0511.

The Proposing Release solicited comments on the proposed collection of information. No comments were received that specifically addressed the PRA submission. However, as discussed in sections III. and IV. above, the Commission received suggestions that would improve the reporting requirement. Based upon these suggestions, the collection of information has been adjusted as described in section III. above and is in accordance with Section 3507 of the PRA.[19] These adjustments include reducing the scope of accountant's review to increase the consistency, accuracy and comparability of the information collected. In addition, the adjustments will reduce the time required to summarize, track, analyze, and report the information received.

An agency may not conduct or sponsor, and a person is not required to respond to, a collection of information unless the agency displays a valid OMB control number. Broker-dealers are required to comply with the collection of information pursuant to the amendments to Rule 17a–5 and the information is necessary to provide the Commission with a better understanding of the security industry's readiness for the Year 2000. The information collected pursuant to the amendments to Rule 17a–5 will be public.

As previously discussed, the Commission has reduced the scope of the independent public accountant's review. However, after carefully considering the comments received, the Commission is retaining its original estimate of the burden hours associated with obtaining the independent public accountant's report. Thus, the Commission estimates that under the final amendments, a broker-dealer will, on average, spend 20 hours obtaining the independent public accountant's report. This is in addition to the two hours a broker-dealer will spend preparing Part I of Form BD–Y2K and for those broker-dealers with a minimum net capital requirement of $100,000 or greater, the 35 hours they will spend preparing Part II of Form BD–Y2K.

The total annualized burden to the securities industry is estimated to be 146,750 hours. This is based on approximately 6,000 respondents spending on average two hours completing Part I of Form BD–Y2K; approximately 2,450 respondents spending on average 35 hours preparing Part II of Form BD–Y2K and an additional 20 hours working with their independent public accountant on the independent public accountant's report.

VIII. Statutory Basis

Pursuant to the Securities Exchange Act of 1934 and particularly sections 17(a) and 23(a) thereof, 15 U.S.C. 78o(c)(3) and 78w, the Commission is adopting amendments to § 240.17a–5 of Title 17 of the Code of Federal Regulations in the manner set forth below.

List of Subjects in 17 CFR Part 240 and 249

Broker-dealers, Reporting and recordkeeping requirements, Securities.

Text of Final Rule

In accordance with the foregoing, Title 17, chapter II, part 240 of the Code of Federal Regulations is amended as follows:

PART 240—GENERAL RULES AND REGULATIONS, SECURITIES EXCHANGE ACT OF 1934

1. The authority citation for part 240 continues to read in part as follows:

Authority: 15 U.S.C. 77c, 77d, 77g, 77j, 77s, 77z–2, 77eee, 77ggg, 77nnn, 77sss, 77ttt, 78c, 78d, 78f, 78i, 78j, 78j–1, 78k, 78k–1, 78*l*, 78m, 78n, 78o, 78p, 78q, 78s, 78u–5, 78w, 78x, 78*ll*(d), 78mm, 79q, 79t, 80a–20, 80a–23, 80a–29, 80a–37, 80b–3, 80b–4 and 80b–11, unless otherwise noted.

* * * * *

2. By amending § 240.17a–5 by adding paragraph (e)(5)(vi) to read as follows:

§ 240.17a–5 Reports to be made by certain brokers and dealers.

* * * * *

(e) *Nature and form of reports.* * * *

(5) * * *

(vi) No later than April 30, 1999, every broker or dealer required to file Part II of Form BD–Y2K (§ 249.618 of this chapter) pursuant to paragraph (e)(5)(iii)(B) of this section and required to file audited financial statements pursuant to paragraph (d) of this section shall file with its Form BD–Y2K an original and two copies of a report prepared by an independent public accountant regarding the broker's or dealer's process, as of March 15, 1999, for addressing Year 2000 Problems with the Commission's principal office in Washington, DC and one copy of the accountant's report with the designated examining authority of the broker or dealer. The independent public accountant's report shall be prepared in accordance with standards that have been reviewed by the Commission and that have been issued by a national organization that is responsible for promulgating authoritative accounting and auditing standards.

* * * * *

Dated: October 28, 1998.

By the Commission.

Margaret H. McFarland,

Deputy Secretary.

[FR Doc. 98–29343 Filed 11–2–98; 8:45 am]

BILLING CODE 8010–01–U

[17] 44 U.S.C. 3501 *et seq.*

[18] The Office of Management and Budget (''OMB'') control number is 3235/0511.

[19] 44 U.S.C. 3507

DEPARTMENT OF HEALTH AND HUMAN SERVICES

Food and Drug Administration

21 CFR Part 178

[Docket No. 96F–0214]

Indirect Food Additives: Adjuvants, Production Aids, and Sanitizers

AGENCY: Food and Drug Administration, HHS.

ACTION: Final rule.

SUMMARY: The Food and Drug Administration (FDA) is amending the food additive regulations to provide for the safe use of 2,9-dichloro-5,12-dihydroquinone[2,3-b]acridine-7,14-dione (C.I. Pigment Red 202) as a colorant for polymers used in contact with food. This action is in response to a petition filed by Ciba-Geigy Corp.

DATES: The regulation is effective November 3, 1998; submit written objections and requests for a hearing December 3, 1998.

ADDRESSES: Submit written objections to the Dockets Management Branch (HFA–305), Food and Drug Administration, 5630 Fishers Lane, rm. 1061, Rockville, MD 20852.

FOR FURTHER INFORMATION CONTACT: Vir D. Anand, Center for Food Safety and Applied Nutrition (HFS–215), Food and Drug Administration, 200 C St. SW., Washington, DC 20204, 202–418–3081.

SUPPLEMENTARY INFORMATION: In a notice published in the **Federal Register** of July 5, 1996 (61 FR 35229), FDA announced that a food additive petition (FAP 6B4512) had been filed by Ciba-Geigy Corp., 335 Water St., Newport, DE